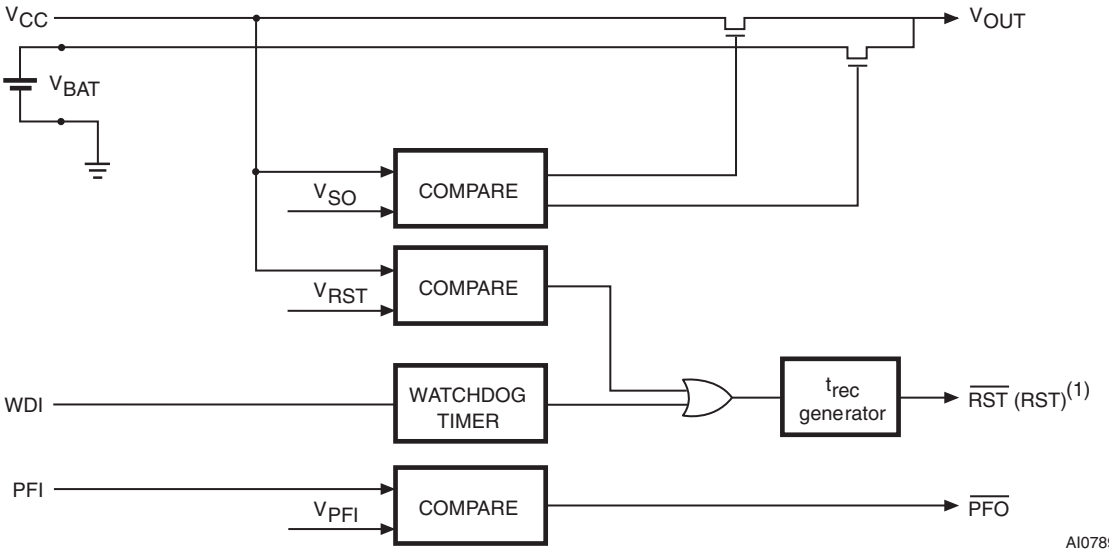
VCC
VOUT
VBAT
VSO
COMPARE
VRST
COMPARE
WDI
WATCHDOG TIMER
trec generator
RST (RST)(1)
PFI
VPFI
COMPARE
PFO
AI07897