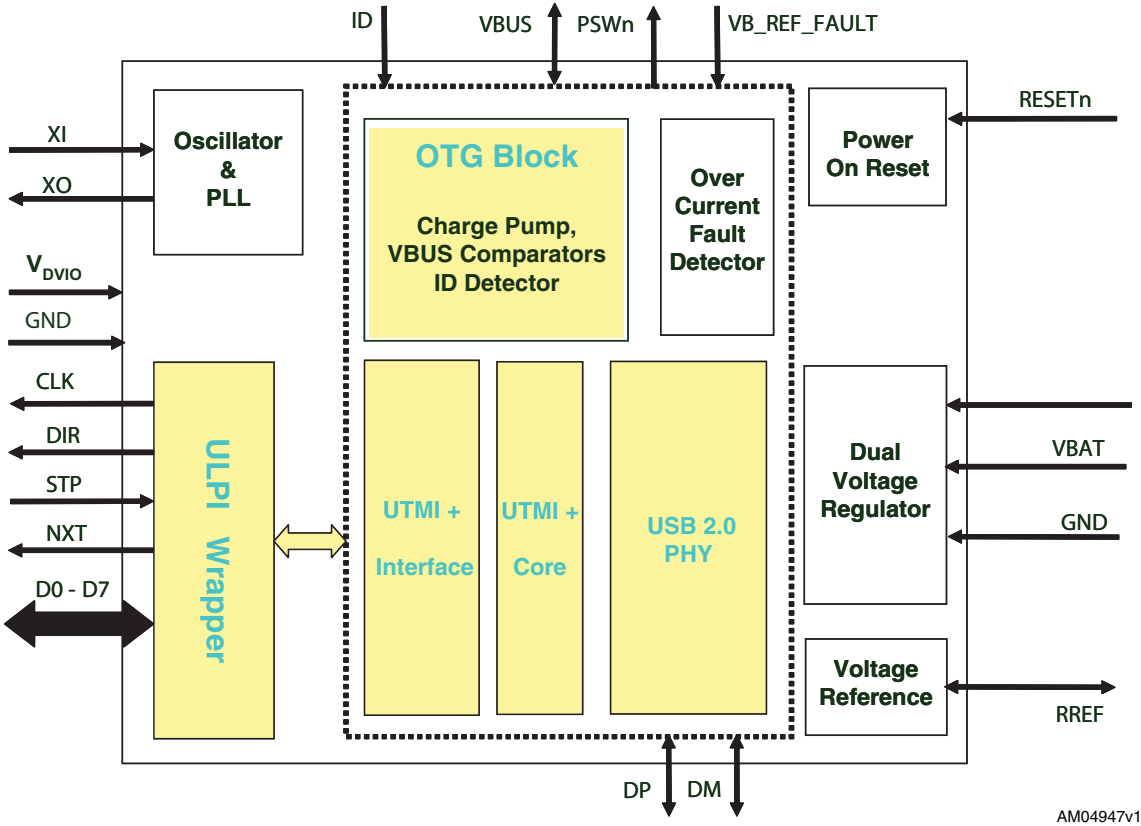
ID
VBUS
PSWn
VB_REF_FAULT
RESETn
XI
XO
Oscillator & PLL
OTG Block
Charge Pump, VBUS Comparators ID Detector
Over Current Fault Detector
Power On Reset
V_{DVIO}
GND
CLK
DIR
STP
NXT
D0 - D7
ULPI Wrapper
UTMI + Interface
UTMI + Core
USB 2.0 PHY
Dual Voltage Regulator
VBAT
GND
Voltage Reference
RREF
DP
DM
AM04947v1