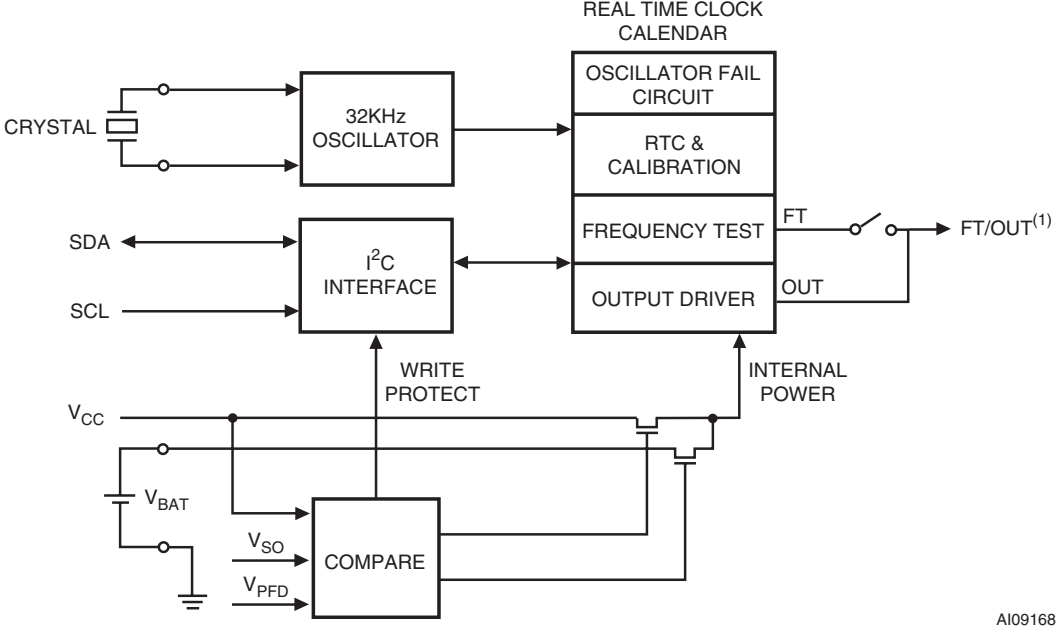
REAL TIME CLOCK
CALENDAR
OSCILLATOR FAIL
CIRCUIT
RTC &
CALIBRATION
FREQUENCY TEST
OUTPUT DRIVER
CRYSTAL
32KHz
OSCILLATOR
SDA
SCL
I2C
INTERFACE
FT
OUT
FT/OUT(1)
WRITE
PROTECT
INTERNAL
POWER
VCC
VBAT
VSO
VPFD
COMPARE
AI09168