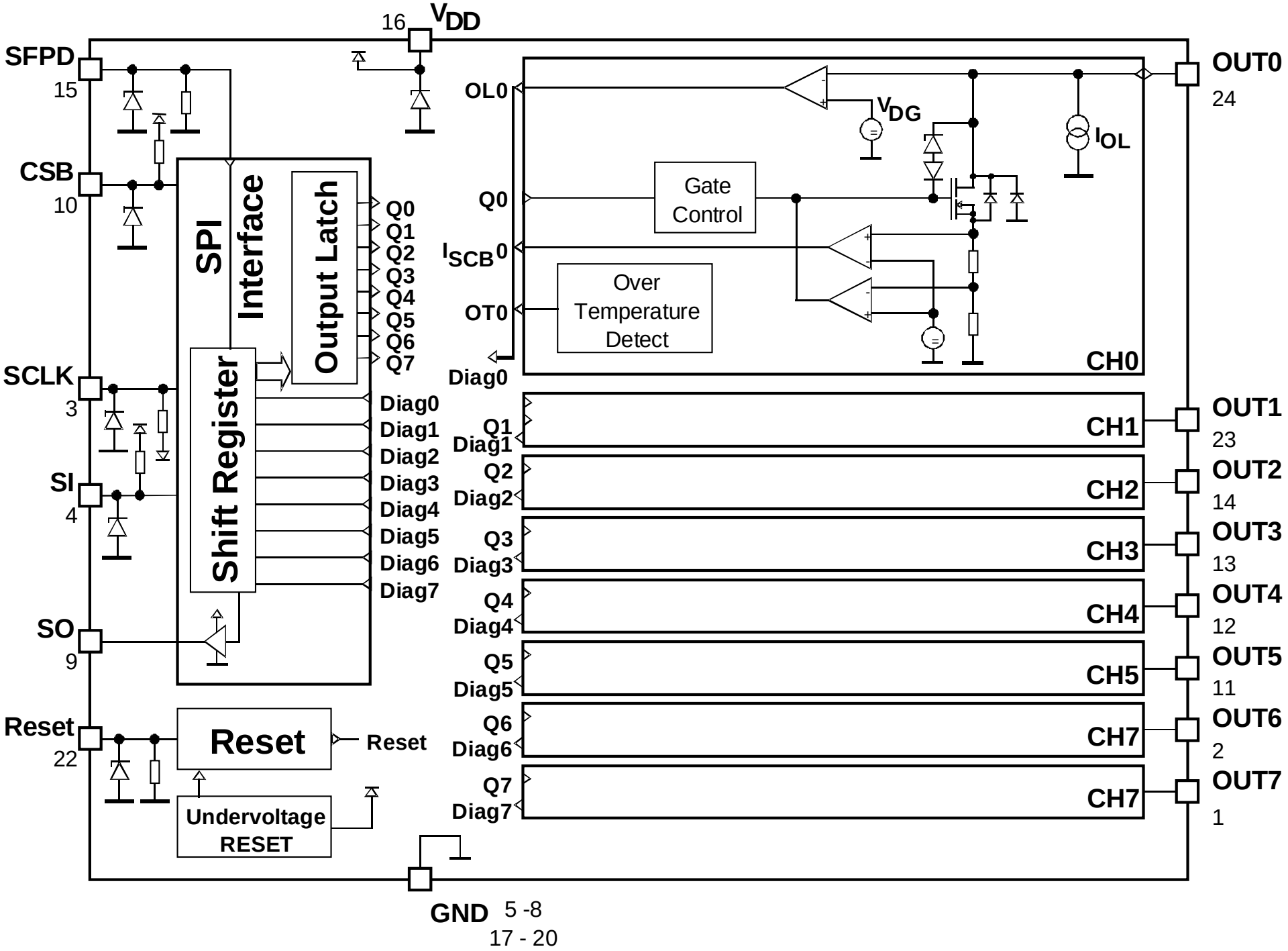
16
VDD
SFPD
15
CSB
10
SCLK
3
SI
4
SO
9
Reset
22
SPI
Interface
Output Latch
Shift Register
Q0
Q1
Q2
Q3
Q4
Q5
Q6
Q7
Diag0
Diag1
Diag2
Diag3
Diag4
Diag5
Diag6
Diag7
Reset
Reset
Undervoltage
RESET
GND
5 -8
17 - 20
OL0
Q0
ISCB0
OT0
Diag0
VDG
IOL
Gate
Control
Over
Temperature
Detect
CH0
Q1
Diag1
CH1
Q2
Diag2
CH2
Q3
Diag3
CH3
Q4
Diag4
CH4
Q5
Diag5
CH5
Q6
Diag6
CH7
Q7
Diag7
CH7
OUT0
24
OUT1
23
OUT2
14
OUT3
13
OUT4
12
OUT5
11
OUT6
2
OUT7
1