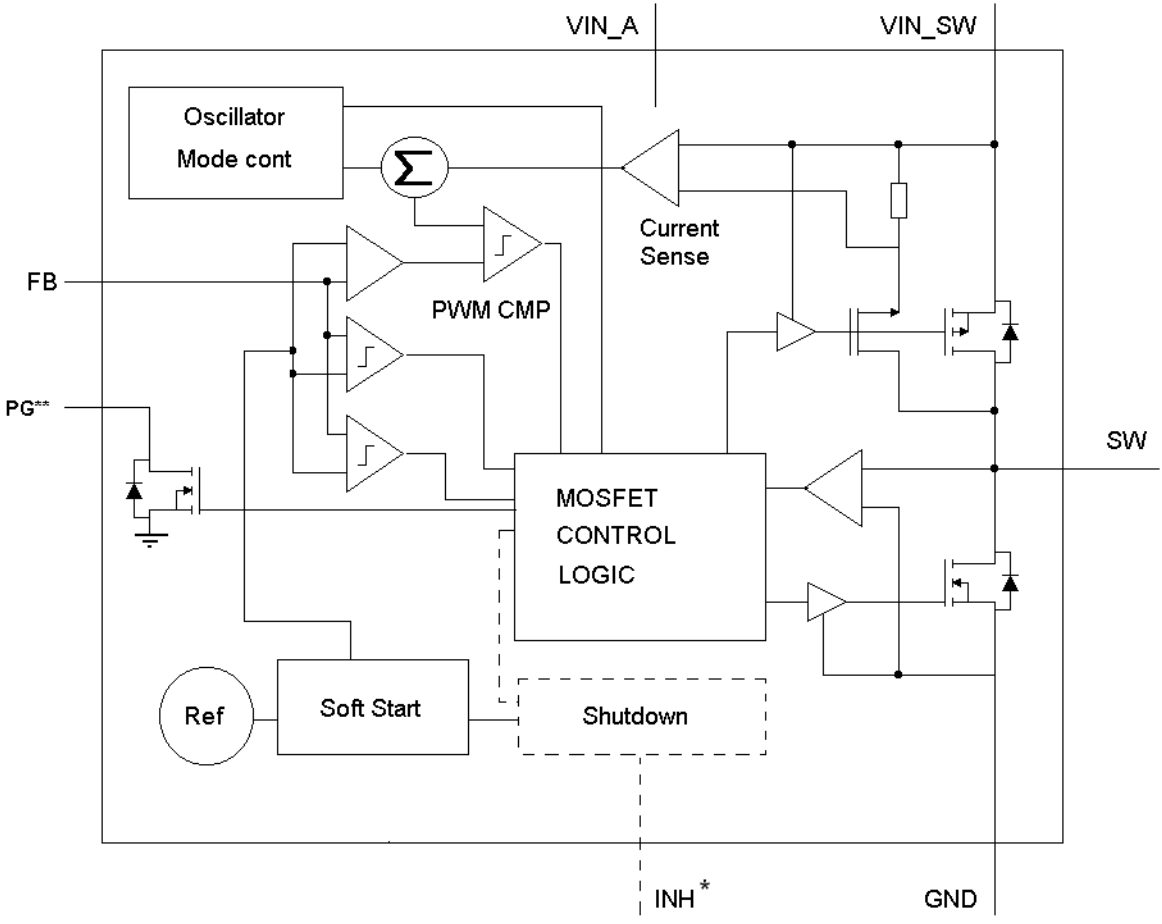
VIN_A
VIN_SW
Oscillator
Mode cont
Σ
Current
Sense
FB
PWM CMP
PG**
SW
MOSFET
CONTROL
LOGIC
Ref
Soft Start
Shutdown
INH *
GND