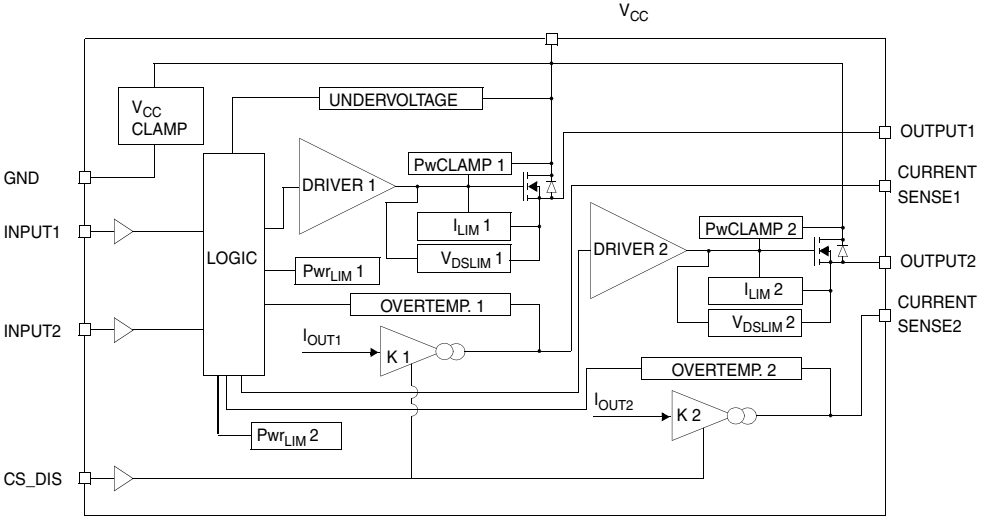
VCC
VCC CLAMP
UNDERVOLTAGE
OUTPUT1
GND
DRIVER 1
PwCLAMP 1
CURRENT SENSE1
INPUT1
ILIM 1
VDSLIM 1
LOGIC
PwrLIM 1
DRIVER 2
PwCLAMP 2
OUTPUT2
ILIM 2
VDSLIM 2
CURRENT SENSE2
OVERTEMP. 1
INPUT2
IOUT1
K 1
OVERTEMP. 2
IOUT2
K 2
PwrLIM 2
CS_DIS