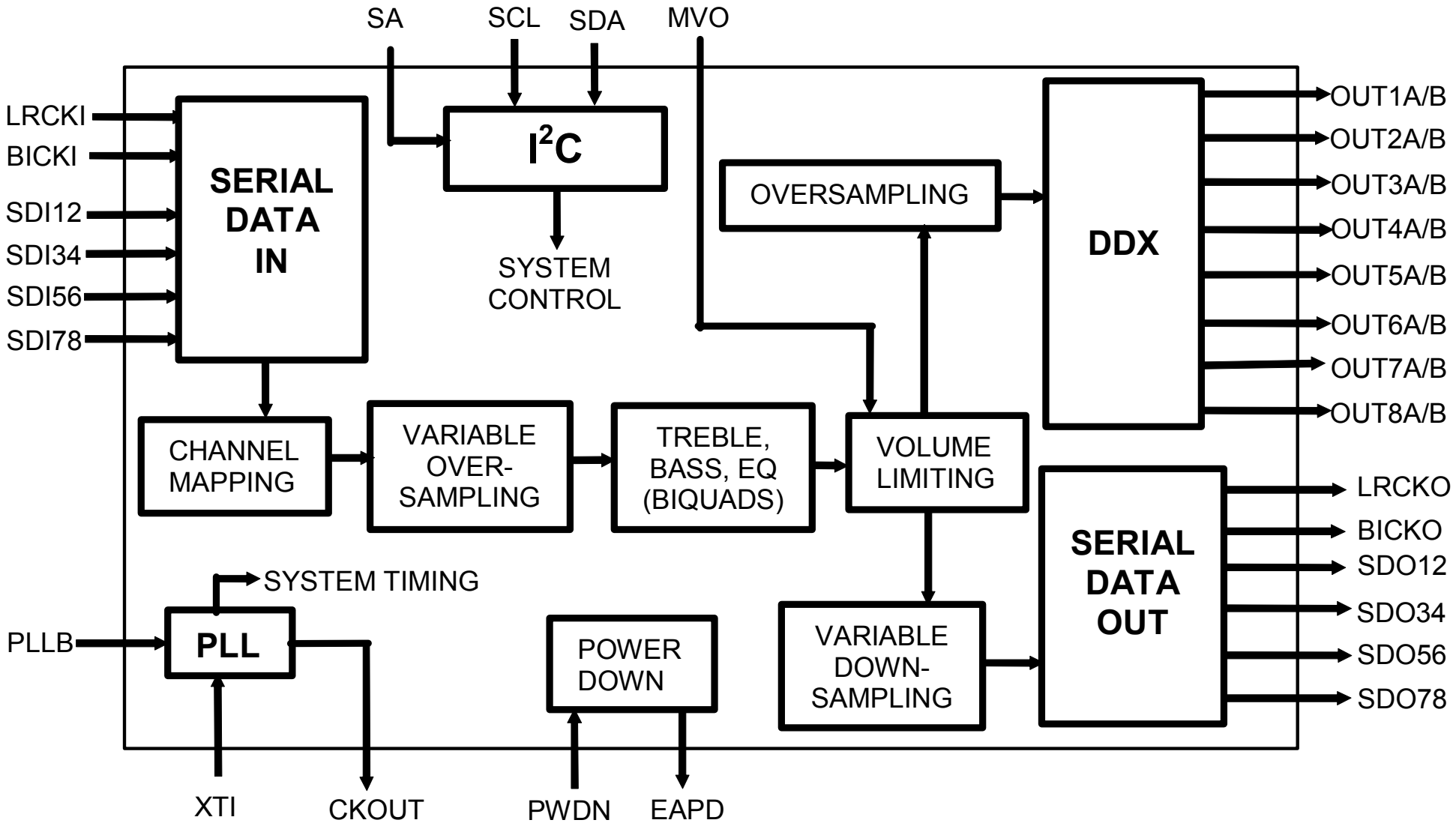
SA
SCL
SDA
MVO
LRCKI
BICKI
SDI12
SDI34
SDI56
SDI78
SERIAL DATA IN
I2C
SYSTEM CONTROL
OVERSAMPLING
DDX
OUT1A/B
OUT2A/B
OUT3A/B
OUT4A/B
OUT5A/B
OUT6A/B
OUT7A/B
OUT8A/B
CHANNEL MAPPING
VARIABLE OVER-SAMPLING
TREBLE, BASS, EQ (BIQUADS)
VOLUME LIMITING
SERIAL DATA OUT
LRCKO
BICKO
SDO12
SDO34
SDO56
SDO78
SYSTEM TIMING
PLLB
PLL
POWER DOWN
VARIABLE DOWN-SAMPLING
XTI
CKOUT
PWDN
EAPD