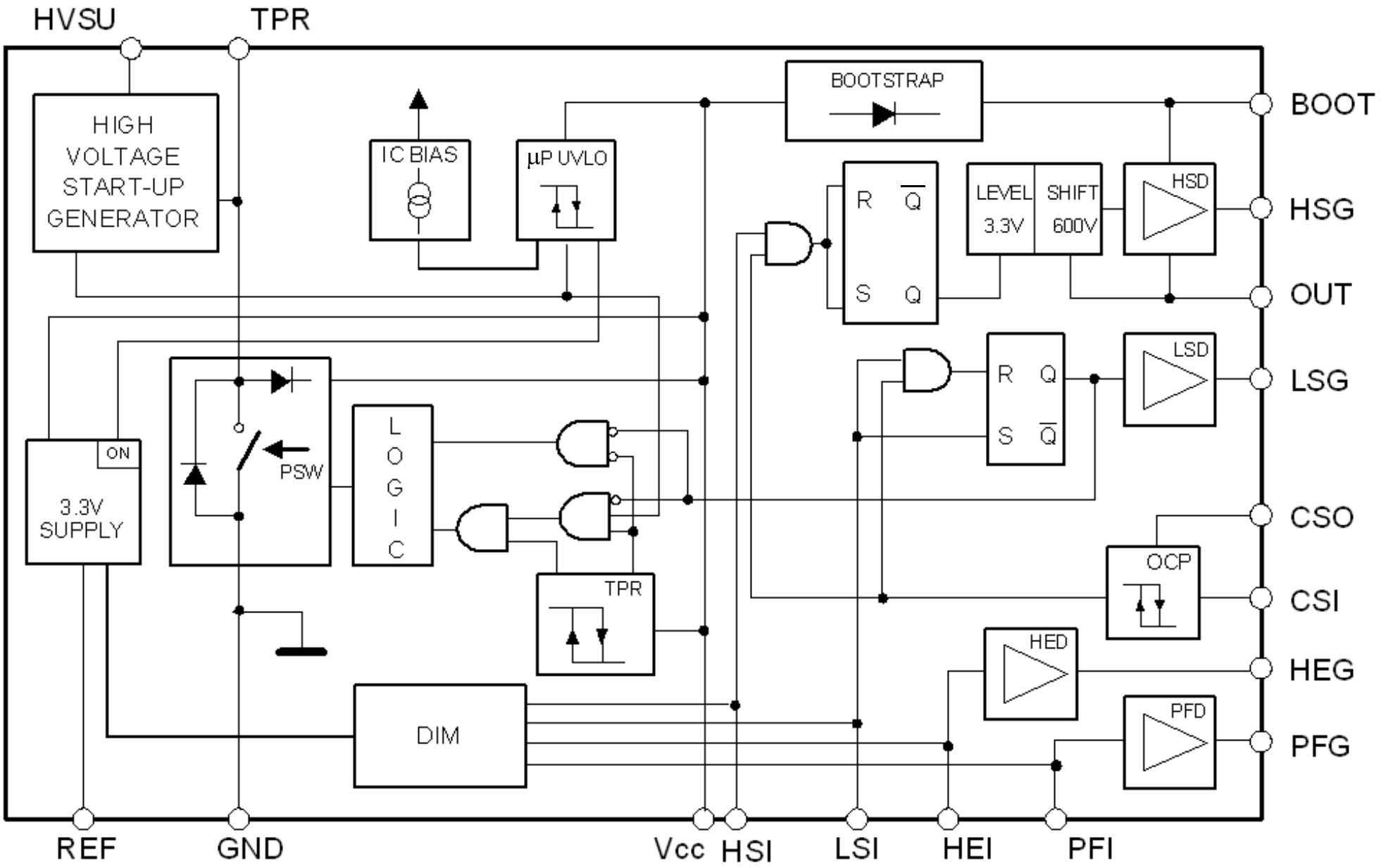
HVSU
TPR
HIGH VOLTAGE START-UP GENERATOR
IC BIAS
µP UVLO
BOOTSTRAP
BOOT
R
Q
S
Q
LEVEL 3.3V
SHIFT 600V
HSD
HSG
OUT
LSD
R
Q
S
Q
LSG
ON
3.3V SUPPLY
PSW
L O G I C
CSO
OCP
CSI
TPR
HED
HEG
DIM
PFD
PFG
REF
GND
Vcc
HSI
LSI
HEI
PFI