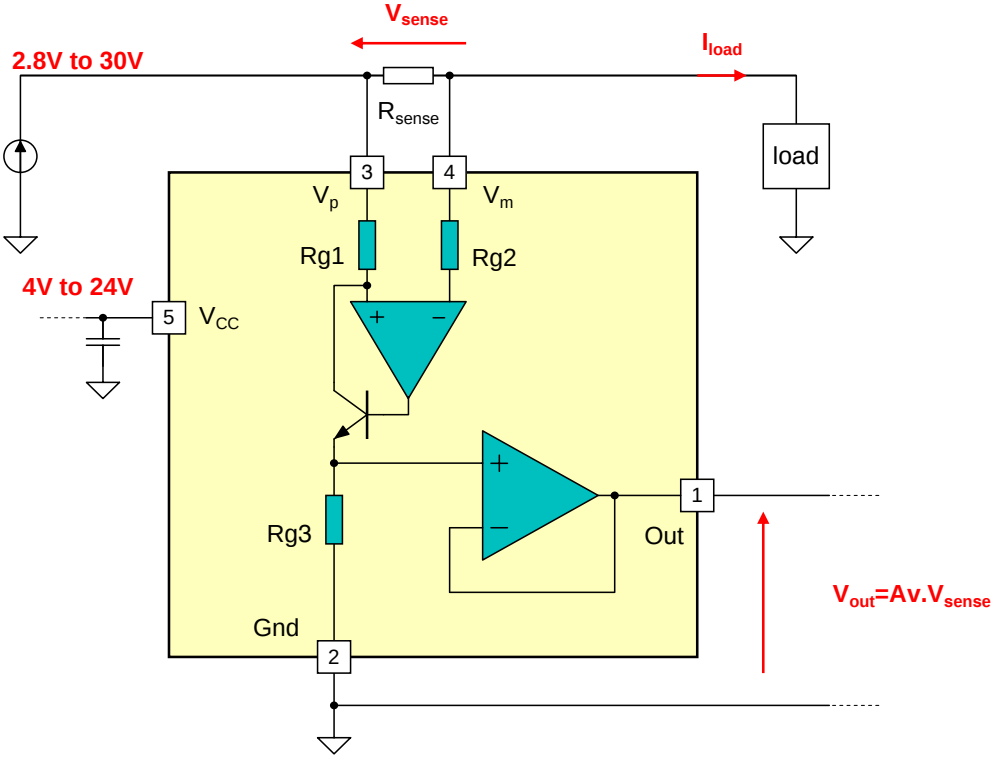
Vsense
Iload
2.8V to 30V
Rsense
load
3
4
Vp
Vm
Rg1
Rg2
4V to 24V
5
VCC
+
−
+
−
1
Rg3
Out
Vout=Av.Vsense
Gnd
2