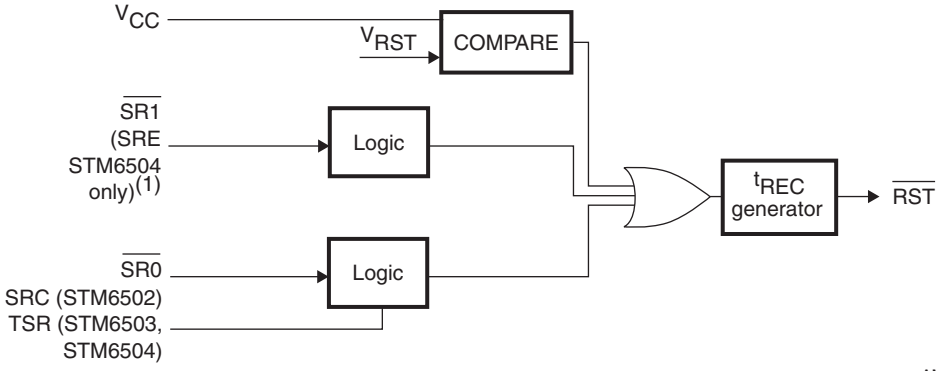
VCC
VRST
COMPARE
SR1
(SRE
STM6504
only)(1)
Logic
SR0
SRC (STM6502)
TSR (STM6503,
STM6504)
Logic
tREC
generator
RST
AM00352a