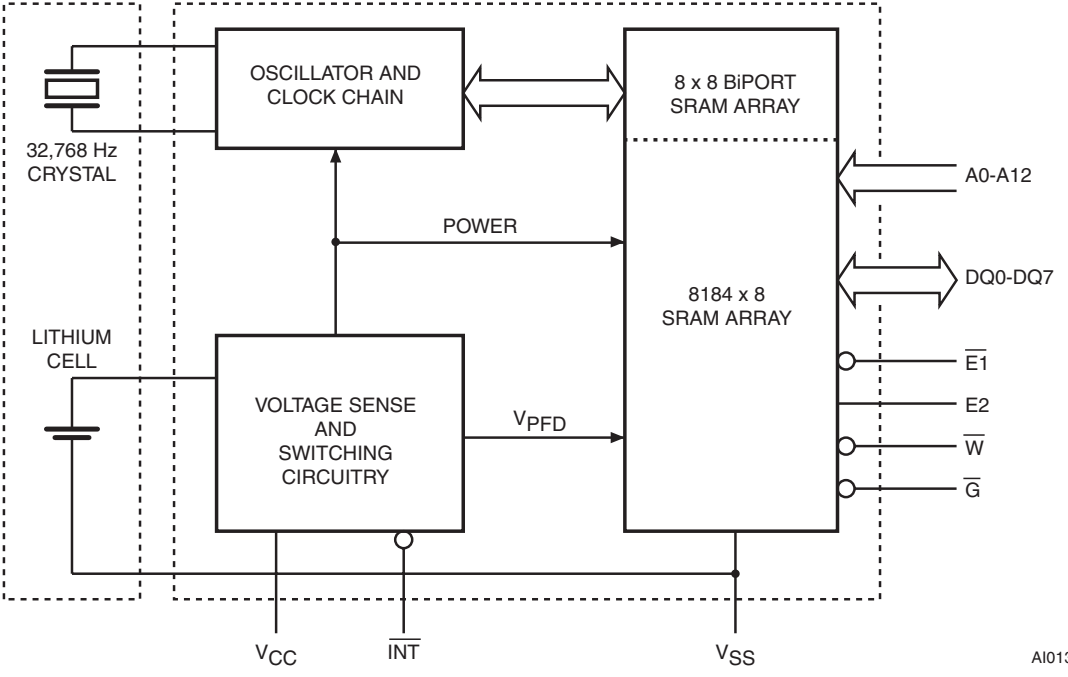
OSCILLATOR AND
CLOCK CHAIN
8 x 8 BiPORT
SRAM ARRAY
32,768 Hz
CRYSTAL
A0-A12
POWER
DQ0-DQ7
8184 x 8
SRAM ARRAY
LITHIUM
CELL
E1
E2
W
G
VOLTAGE SENSE
AND
SWITCHING
CIRCUITRY
VPFD
VCC
INT
VSS
AI01333