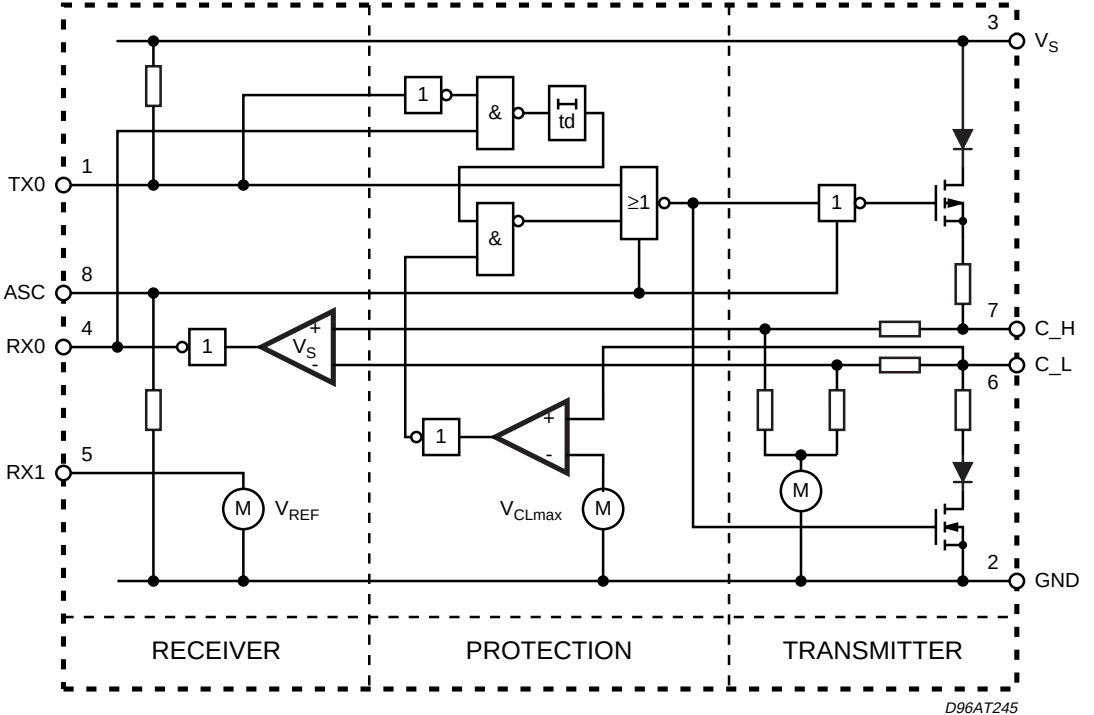
3
VS
1
td
&
TX0
1
≥1
1
&
ASC
8
7
C_H
RX0
4
1
VS
+
-
C_L
6
1
+
-
RX1
5
M
VREF
VCLmax
M
M
2
GND
RECEIVER
PROTECTION
TRANSMITTER
D96AT245