EVAL-RHRICL1ATV1

Data brief

EVAL-RHRICL1ATV1 evaluation board - re-triggerable

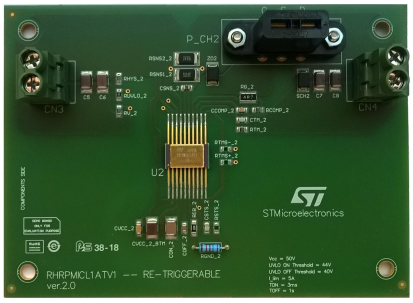

Features

- V_{CC} = 50 V
- UVLO on threshold = 44 V
- UVLO off threshold = 40 V
- I_lim = 5 A
- T_{ON}= 3 ms
- T_{OFF}= 1 s

Description

The EVAL-RHRICL1ATV1 evaluation board has been developed for the RHRPMICL1A rad-hard integrated current limiter IC, which is able to work with an external P-channel power MOSFET. Further information can be found in the datasheet available on the web.

The RHRPMICL1A features 3 user-configurable operating modes (re-triggerable, latch, foldback), with different behaviors in case of overload/short-circuit events. Each evaluation tool comes with all external components needed for a complete electrical evaluation of the device functionality in the selected configuration.

The EVAL-RHRICL1ATV1 evaluation board is intended for evaluation purposes only.

Product status link
EVAL-RHRICL1ATV1

Product summary	
Type	Evaluation tools
Order code	EVAL-RHRICL1ATV1
Configuration	Re-triggerable
Marking	RHRICL1ATV1 re-triggerable

1 Bill of material

Table 1. Bill of material

Item	Qty	Reference	Part / value	Voltage current	Package	Manufacturer	Manufacturer code	More info	Footprint
1	2	CN3, CN4	2PIN screw connector	Pitch-6.35 mm	TH	Phoenix contact	1714955	INPUT (CN1) and OUTPUT (CN2) connectors	
2	4	C5,C6,C7,C8	4.7 uF capacitor	100 V	1812	TDK	C4532X7S2A475M	X7S	1812
3	1	CVcc_2_btm	4.7 uF capacitor	100 V	1812	TDK	C4532X7S2A475M	X7S	1812
4	1	CVcc_2	100 nF	100 V	1206	MULTICOMP	MCCA000490	X7R	1206
5	1	Csns_2	1 uF	10 V	0805	KEMET	C0805C105K8NACTU	X8L	0805
6	1	Coff_2	470 nF	50 V	0805	KEMET	C0805C474K5RAC	X7R	**0805**
7	1	Ccomp_2	2.2 nF	50 V	0805	AVX	08055C222JAT2A	X7R	0805
8	2	C_TM_2 C_STS_2	47 pF	50 V	0805	KEMET	C0805C470J5GACTU	NPO	0805
9	1	Con_2	27 nF	50 V	1812	KEMET	C1812C273J5GACTU	NPO	1812
10	1	Rv_2	220 kΩ	100 V, 0.1%, 25 ppm/°C	0.125 W	Panasonic	ERA6AEB224V		0805
11	2	Rtms+_2, Rtms-_2	5 kΩ	100 V, 0.1%, 5 ppm/°C	0.200 W	Vishay thin film	PNM0805E5001BST5		0805
12	1	Rtm_2	100 kΩ	100 V, 0.1%, 25 ppm/°C	0.125 W	Panasonic	ERA6AEB104V	I=20 µA	0805
13	1	Rsts_2	50 kΩ	100 V, 0.1%, 25 ppm/°C	0.200 W	Vishay	PNM0805E5002BST5	I=100 µA	0805
14	1	RGND_2 (R_floating)	16.2 kΩ	1%	0.6 W	Vishay	MBB02070C1622FCT00		TH
15	1	Rg_2	4.7 Ω	200 V, 1%	1 W	Panasonic	ERJB1BF4R7U		1020
16	2	Rsns1_2 Rsns2_2	40 mΩ	1%, 75 ppm/°C	1 W	VISHAY	WSL2512R0400FEA	I=0.5 A - 10 A	2512
17	1	Rhys_2	1.5 kΩ	100 V, 0.1%, 25 ppm/°C	0.125 W	Panasonic	ERA6AEB152V		0805
18	1	Ruvlo_2	13 kΩ	100 V, 0.1%, 25 ppm/°C	0.125 W	Panasonic	ERA6AEB133V		0805
19	1	Rcomp_2	1 kΩ	0.1%, 25 ppm/°C	125 mW	Panasonic	ERA6AEB102V		0805
20	1	Rir_2	100 kΩ	150 V, 0.1%, 25 ppm/°C	0.250 W	Panasonic	ERA8AEB104V	I=10 µA	1206
21	1	ZD2	ZENER	15 V, 3 W		ON SEMICONDUCTORS	1SMB5929BT3G	Zener	SMB-CASE403A

Item	Qty	Reference	Part / value	Voltage current	Package	Manufacturer	Manufacturer code	More info	Footprint
22	1	SCH2	STPS3150	3 A, 150 V		ST	STPS3150U	Diode 100 V-5 A	SMB
23	1	P_ch2 SOCKET	P-ch TO254AA socket (for the STRH40P10)	34 A, 100 V		3M TOUCH SYSTEMS	203-2737-55-1102	P-channel, B_{Vdss} 100 V, id 48 A, $R_{DS(on)}$ 60 mΩ, Qg 162 nC	TO-254 AA
24	1	U2	ICL001		FLAT20	ST			FLAT20

2 Device pin configuration

Figure 1. **RHRPMICL1A pin connections**

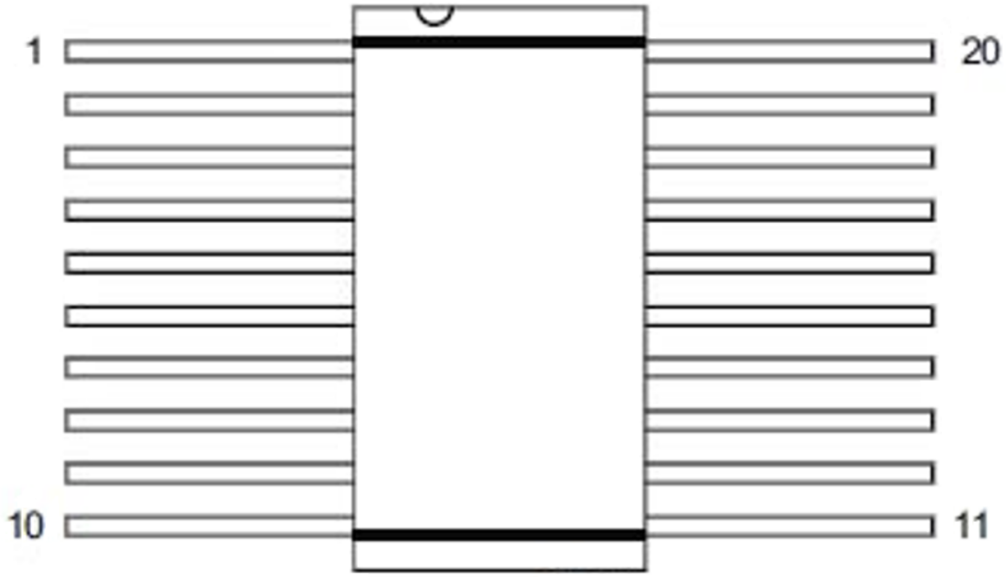

Note: Metallic lid is connected to ground.

Table 2. Pin connection

#Pin	Name	Type	Description
1	SET_STS	Digital input	Configuration pin. If shorted-to -ND, the current limiter at power-up is OFF. If connected to VCC, the current limiter at power-up is normally ON
2	TC_OFF	Digital input	Telecommand interface input for OFF pulsed signal
3	SET_FLB	Digital input	Configuration pin. If connected to VCC, the foldback mode is enabled
4	TON	Analog output	Used to set the trip-off time TON. A capacitor CON is connected between this pin and GND
5	TOFF	Analog output	Used to set the recovery time TOFF. This pin has a double function. If the COFF capacitor is connected between this pin and GND, it sets the TOFF value in re-triggerable mode. If the pin is shorted-to-GND, the device is configured in latched mode
6	I_REF	Analog input/ output	Used to set the current reference. An external high-precision resistor is connected between this pin and GND in order to set the current reference
7	GND	Power supply	Ground. Return of the bias current and zero-voltage reference for all internal voltages. Connected to the main bus ground through a decoupling resistor to operate in floating ground configuration
8	VD	Analog input	Sense pin of the external MOSFET drain voltage used to detect current limitation. A small series resistor can be useful to reduce power dissipation
9	STS	Digital output	Telemetry digital status. A resistor has to be connected between the pin and the main bus ground
10	TMS+	Analog input	Non-inverting input of the telemetry circuit. An accurate external resistor is connected between ISNS+ and this pin in order to guarantee the requested accuracy on the output source current for the analog telemetry
11	TMS-	Analog input	Inverting input of the telemetry circuit. An accurate external resistor is connected between ISNS- and this pin in order to guarantee the requested accuracy on the output source current for the analog telemetry
12	TM	Analog output	Output source current for the analog telemetry. A resistor has to be connected between this pin and the main bus ground.
13	COMP	Analog output	Output pin for current limitation loop compensation
14	V_g	Analog output	MOSFET gate driver output
15	ISNS-	Analog input	Inverting input of the op-amp current limitation loop. The pin is tied directly to the hot (negative) end of the external current sense resistor
16	ISNS+	Analog input	Non-inverting input of the op-amp current limitation loop. The pin is tied directly to the hot (positive) end of the external current sense resistor
17	VCC	Power supply	Supply input voltage
18	HYS	Analog output	External setting of the UVLO hysteresis. A resistor has to be connected between the main bus and this pin
19	TC_ON	Digital input	Telecommand interface input for ON pulsed signal
20	UVLO	Analog input	External setting of the UVLO turn-on threshold. The pin has to be tied to the midpoint of a resistor divider that senses the supply voltage vs. main bus ground

3 Schematic of the EVAL-RHRICL1ATV1 board

Figure 2. EVAL-RHRICL1ATV1 schematic

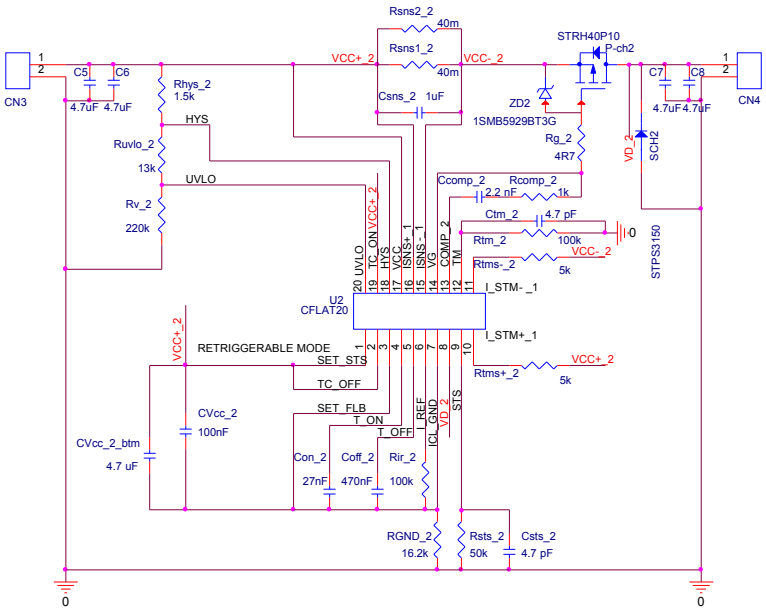

4 Layout of the EVAL-RHRICL1ATV1 board

Figure 3. EVAL-RHRICL1ATV1 top layout

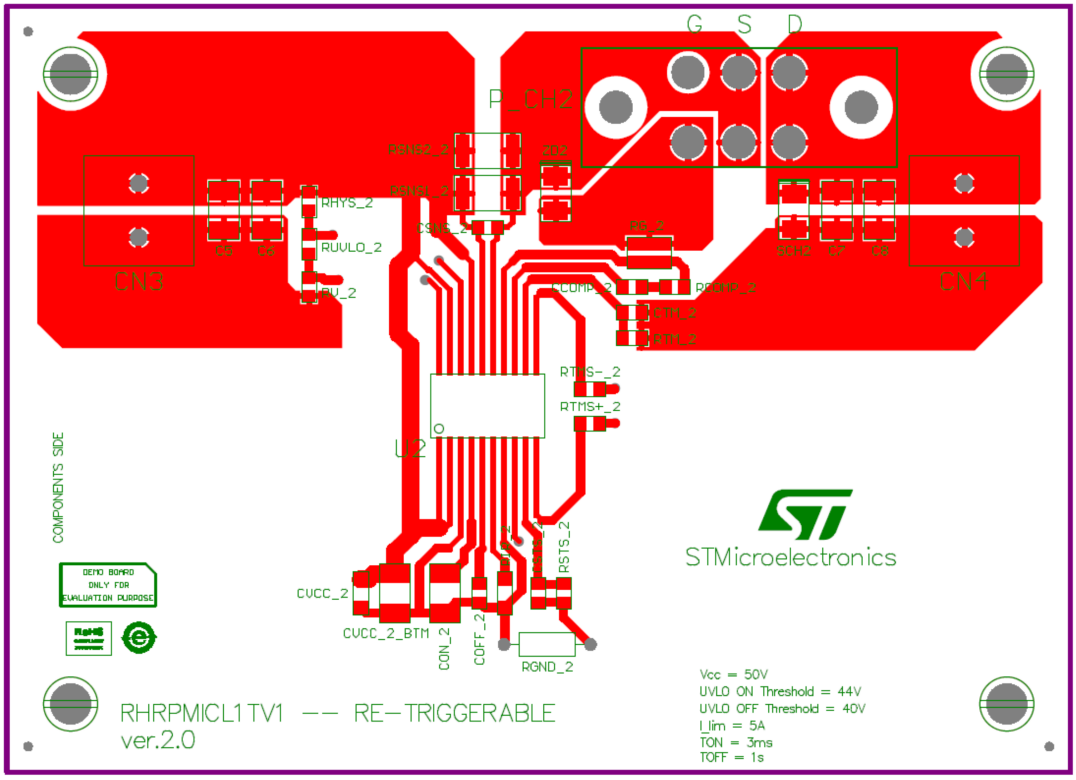

Figure 4. EVAL-RHRICL1ATV1 bottom layout

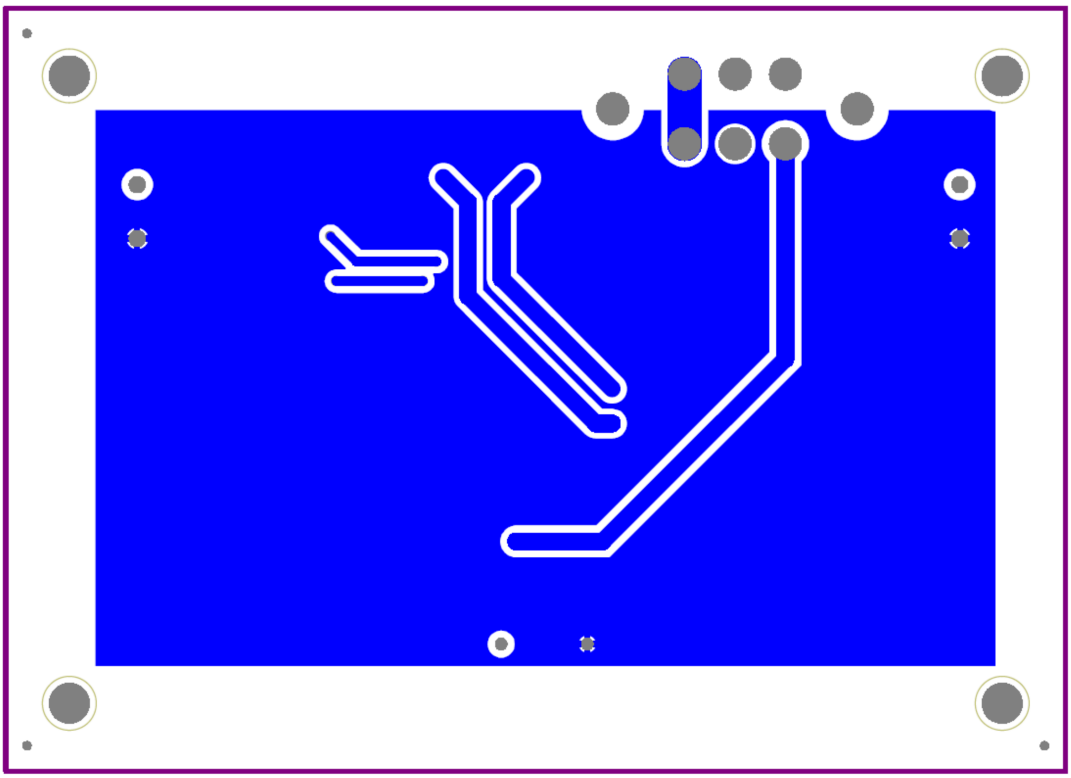

Revision history

Table 3. Document revision history

Date	Version	Changes
18-Jul-2019	1	Initial release.

Contents

1 Bill of material 2
2 Device pin configuration 4
3 Schematic of the EVAL-RHRICL1ATV1 board 6
4 Layout of the EVAL-RHRICL1ATV1 board. 7
Revision history 9

IMPORTANT NOTICE – PLEASE READ CAREFULLY

STMicroelectronics NV and its subsidiaries (“ST”) reserve the right to make changes, corrections, enhancements, modifications, and improvements to ST products and/or to this document at any time without notice. Purchasers should obtain the latest relevant information on ST products before placing orders. ST products are sold pursuant to ST’s terms and conditions of sale in place at the time of order acknowledgement.

Purchasers are solely responsible for the choice, selection, and use of ST products and ST assumes no liability for application assistance or the design of Purchasers’ products.

No license, express or implied, to any intellectual property right is granted by ST herein.

Resale of ST products with provisions different from the information set forth herein shall void any warranty granted by ST for such product.

ST and the ST logo are trademarks of ST. For additional information about ST trademarks, please refer to www.st.com/trademarks. All other product or service names are the property of their respective owners.

Information in this document supersedes and replaces information previously supplied in any prior versions of this document.

© 2019 STMicroelectronics – All rights reserved