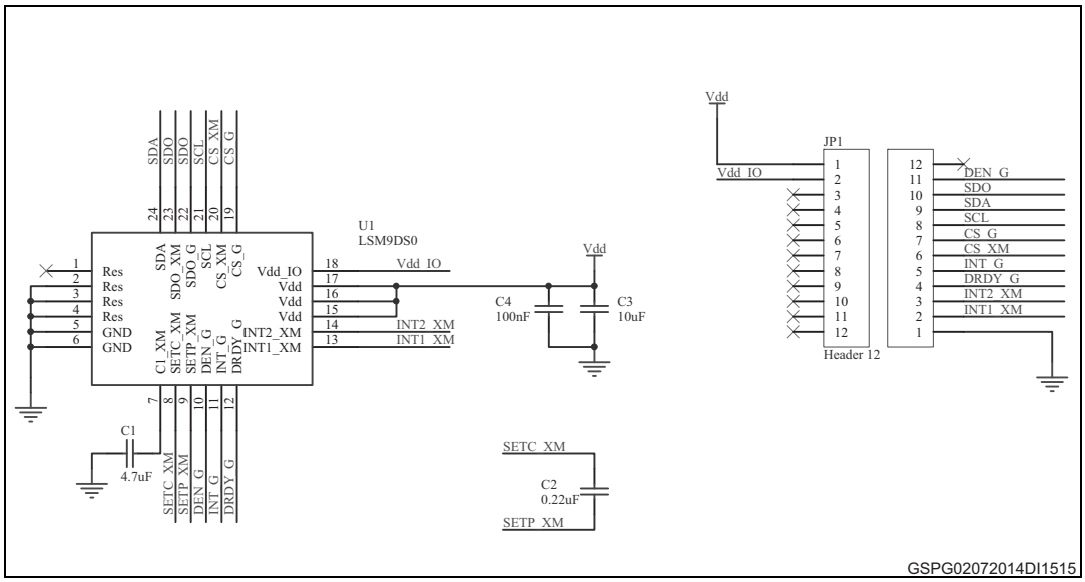STEVAL-MKI154V1 Schematic diagram