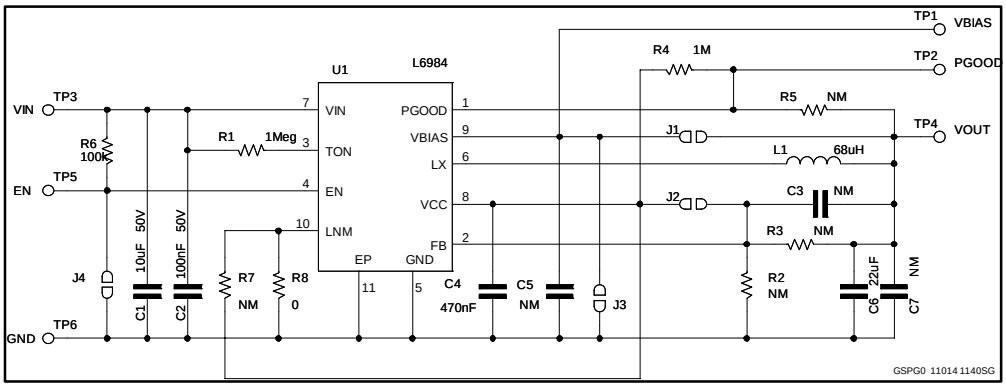STEVAL-ISA159V1 Schematic diagram