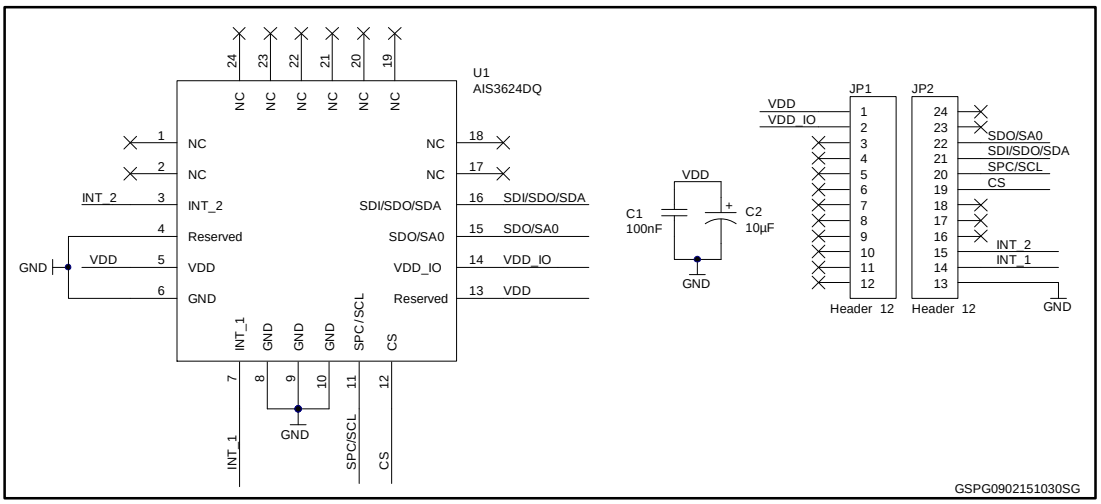STEVAL-MKI158V1 Schematic diagram