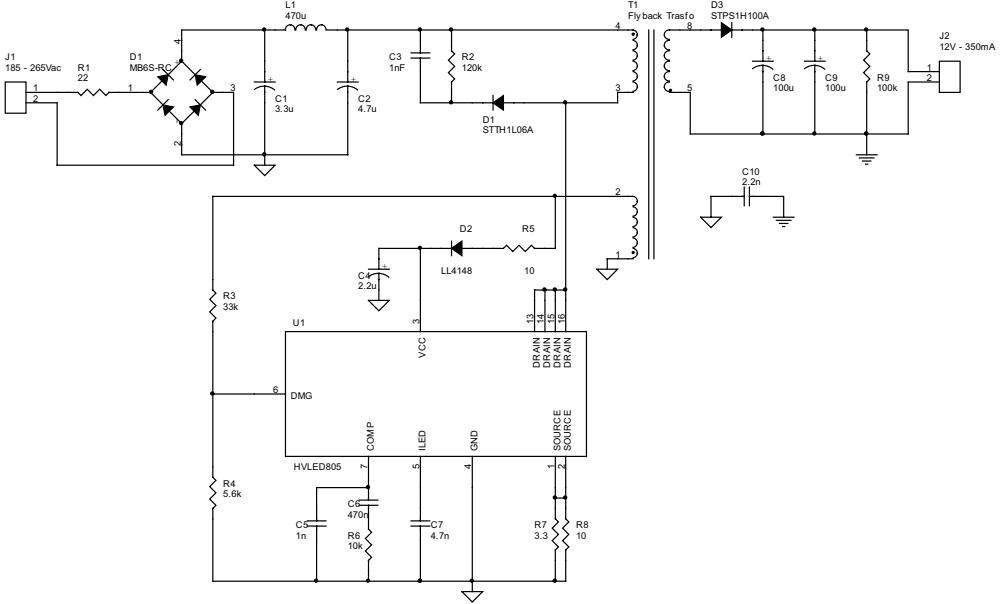
J1
185 - 265Vac
R1
22
D1
MB6S-RC
L1
470u
C1
3.3u
C2
4.7u
C3
1nF
R2
120k
D1
STTH1L06A
T1
Fly back Trasfo
D3
STPS1H100A
C8
100u
C9
100u
R9
100k
J2
12V - 350mA
C10
2.2n
D2
LL4148
R5
10
C4
2.2u
R3
33k
U1
VCC
DRAIN
DRAIN
DRAIN
DRAIN
DMG
COMP
ILED
GND
SOURCE
SOURCE
HVLED805
R4
5.6k
C6
470n
C5
1n
R6
10k
C7
4.7n
R7
3.3
R8
10