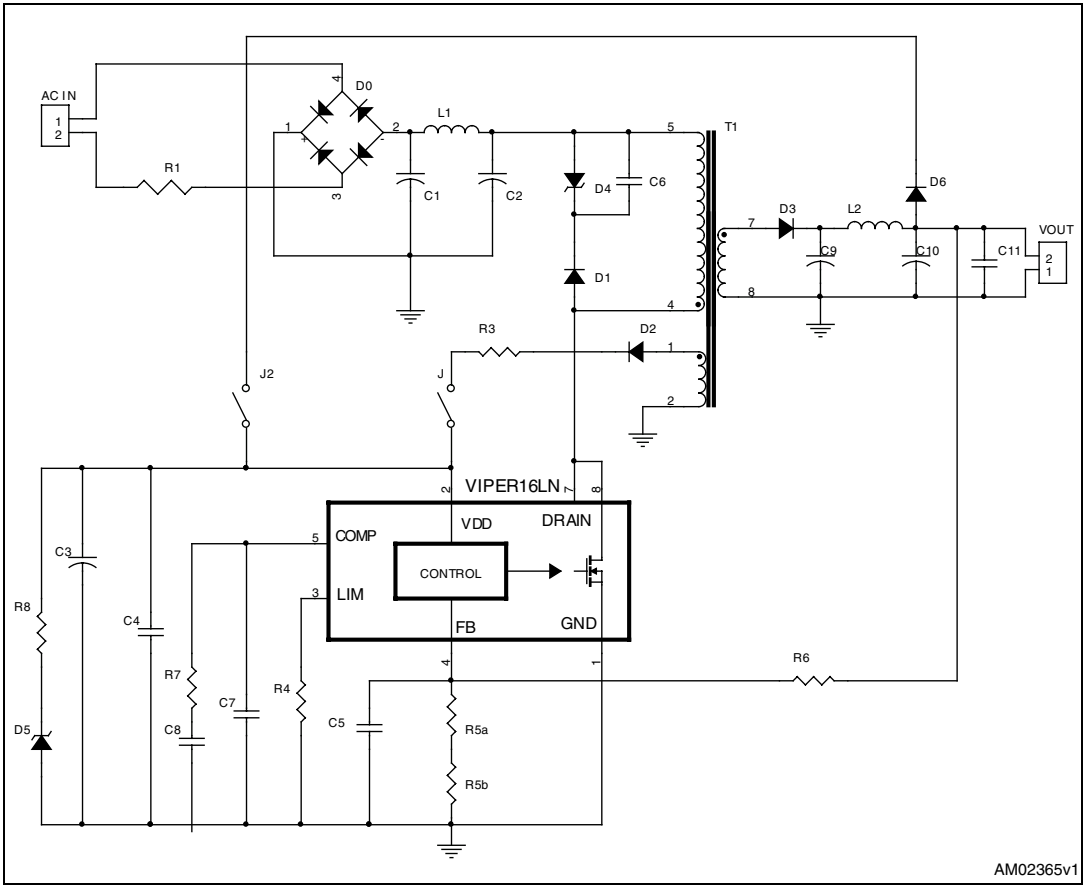STEVAL-ISA118V1 Application schematic