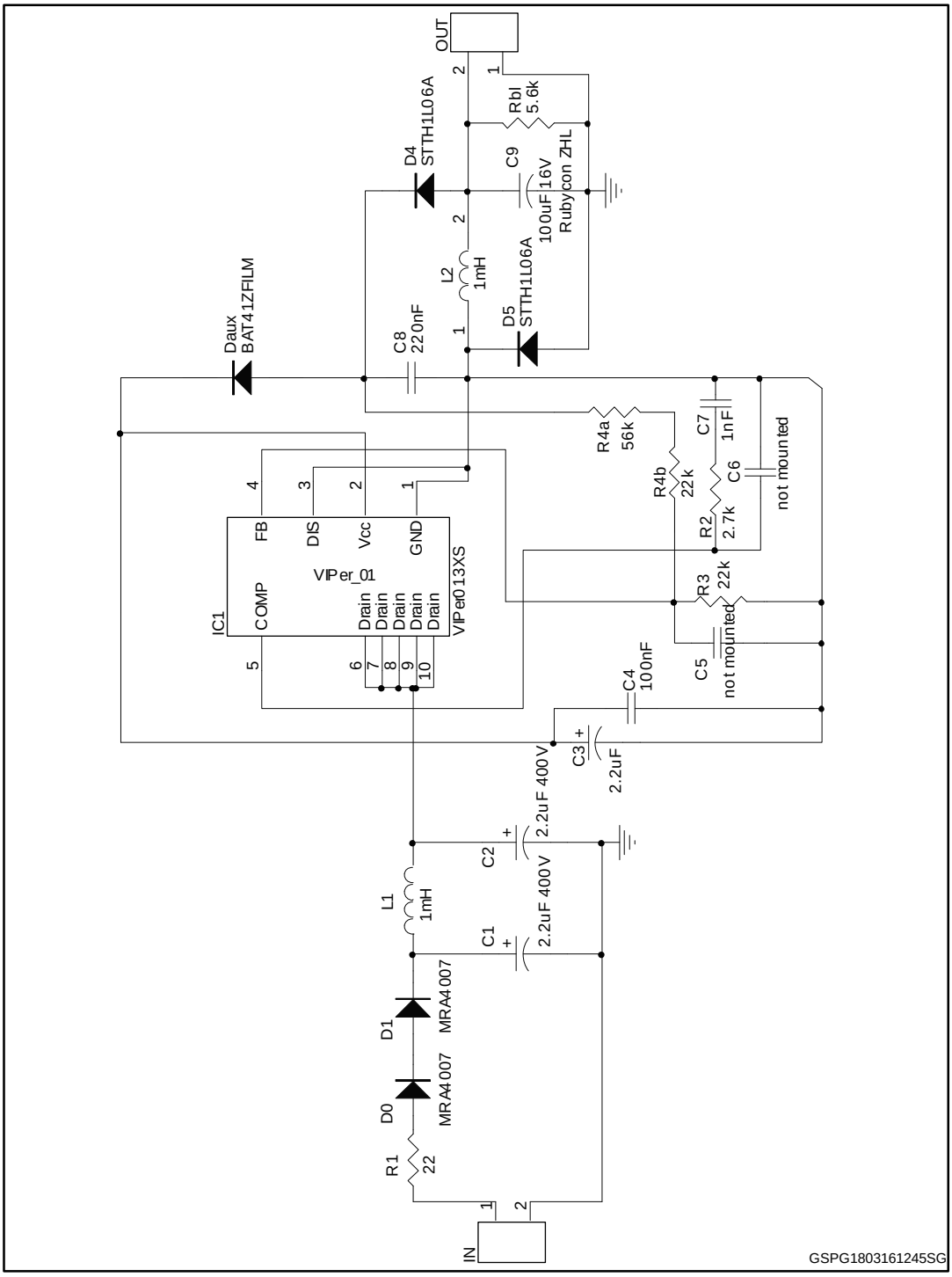STEVAL-ISA178V1 Schematic diagram