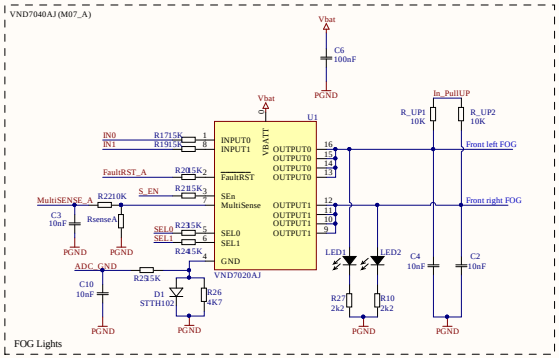

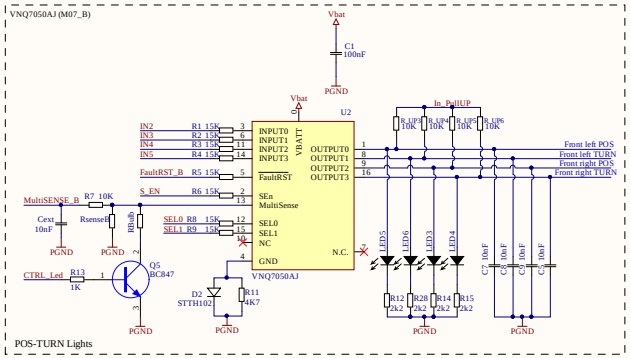

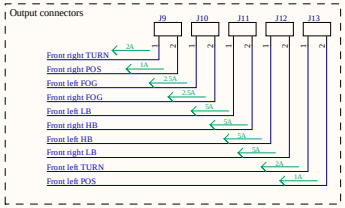

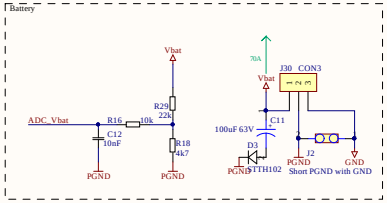

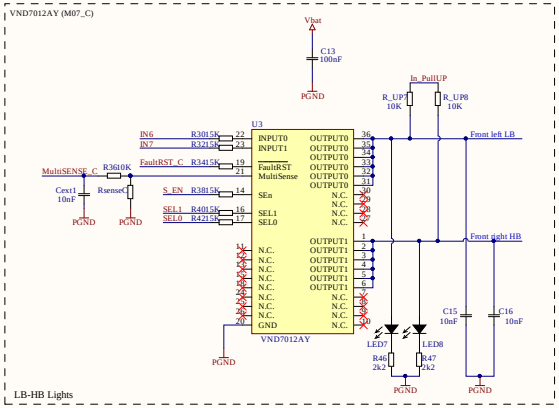

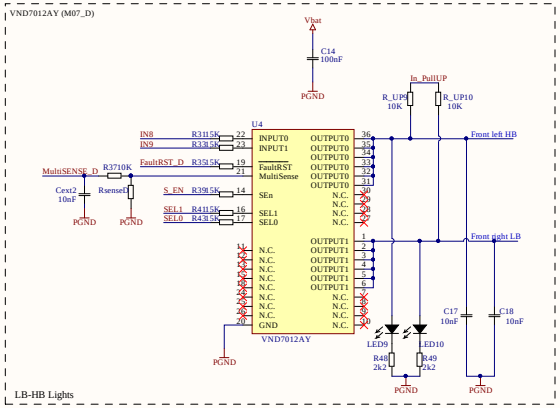

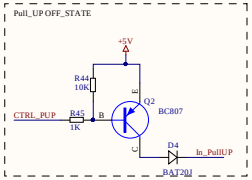

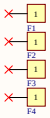

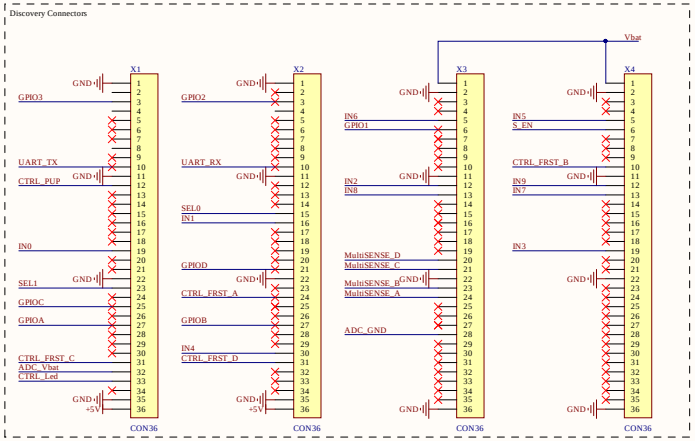

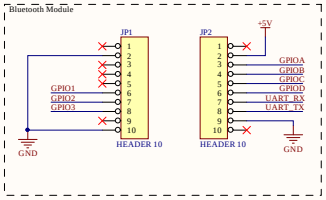

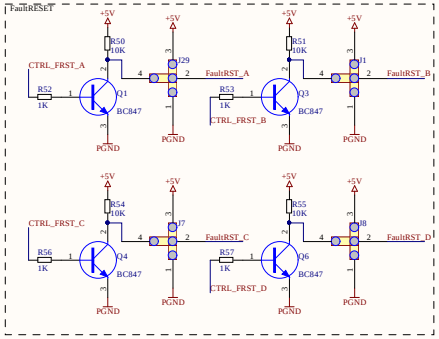

STMicroelectronics assumes no responsibility for the consequences of the use of this information

Title	*M0-7 Mother board (Bolero & M07 project)*		
Size: A2	Author: B&A Appl. Lab.	Revision: 2.0A	*STMicroelectronics* *STMicroelectronics* *S.S. Primosole 50* *Catania*
Date: 4/11/2017	Time: 8:23:40 AM	Sheet 1 of 1	
Doc. Reference: #NAME?			
File: ASD_M07L_V1.1.SCHDOC			Created by: Roberto Caputo