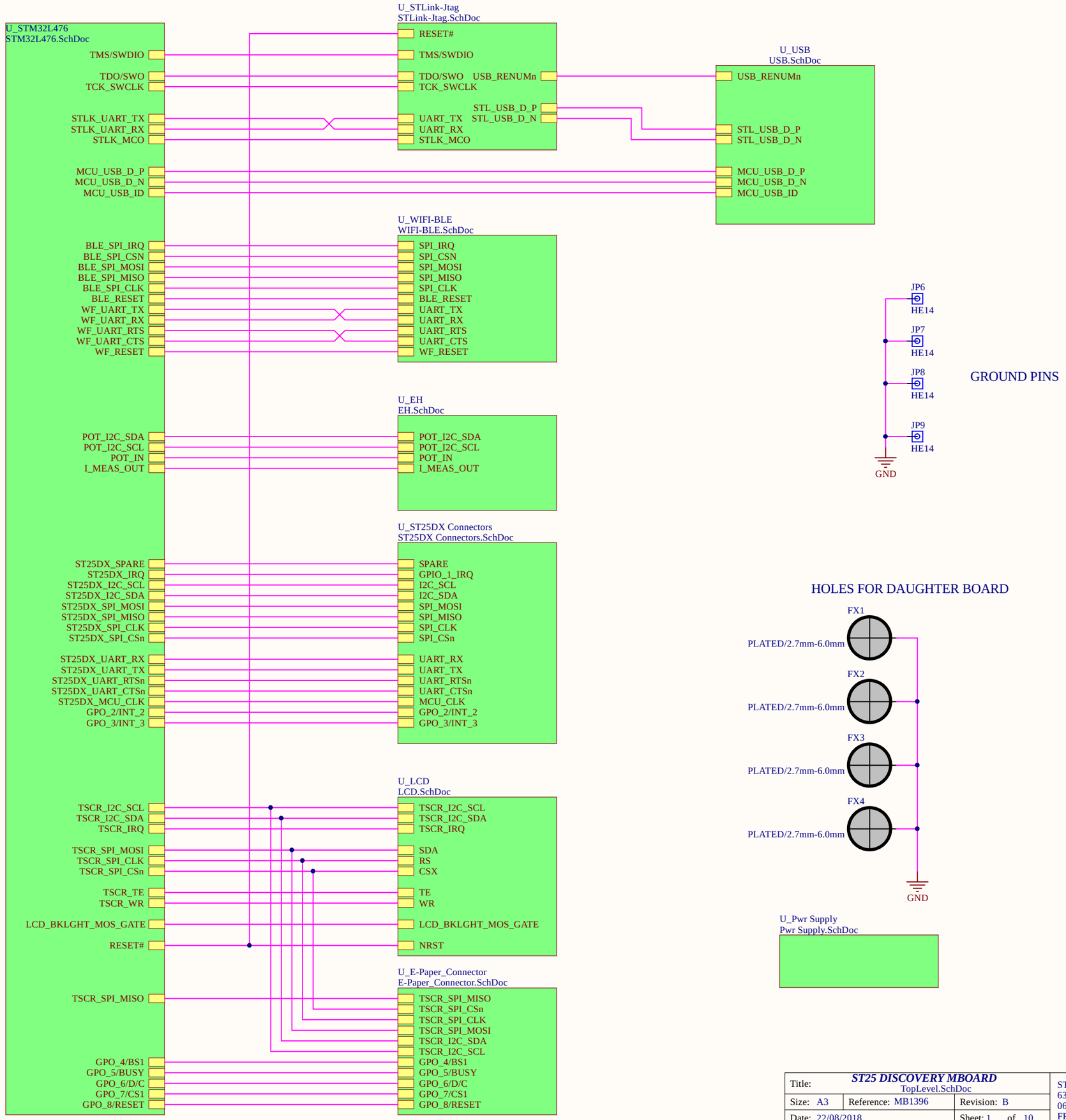

Title:	***ST25 DISCOVERY MBOARD*** TopLevel.SchDoc		STMicroelectronics 635, Route des Lucioles 06560 VALBONNE FRANCE
Size: A3	Reference: MB1396	Revision: B	
Date: 22/08/2018		Sheet: 1 of 10	

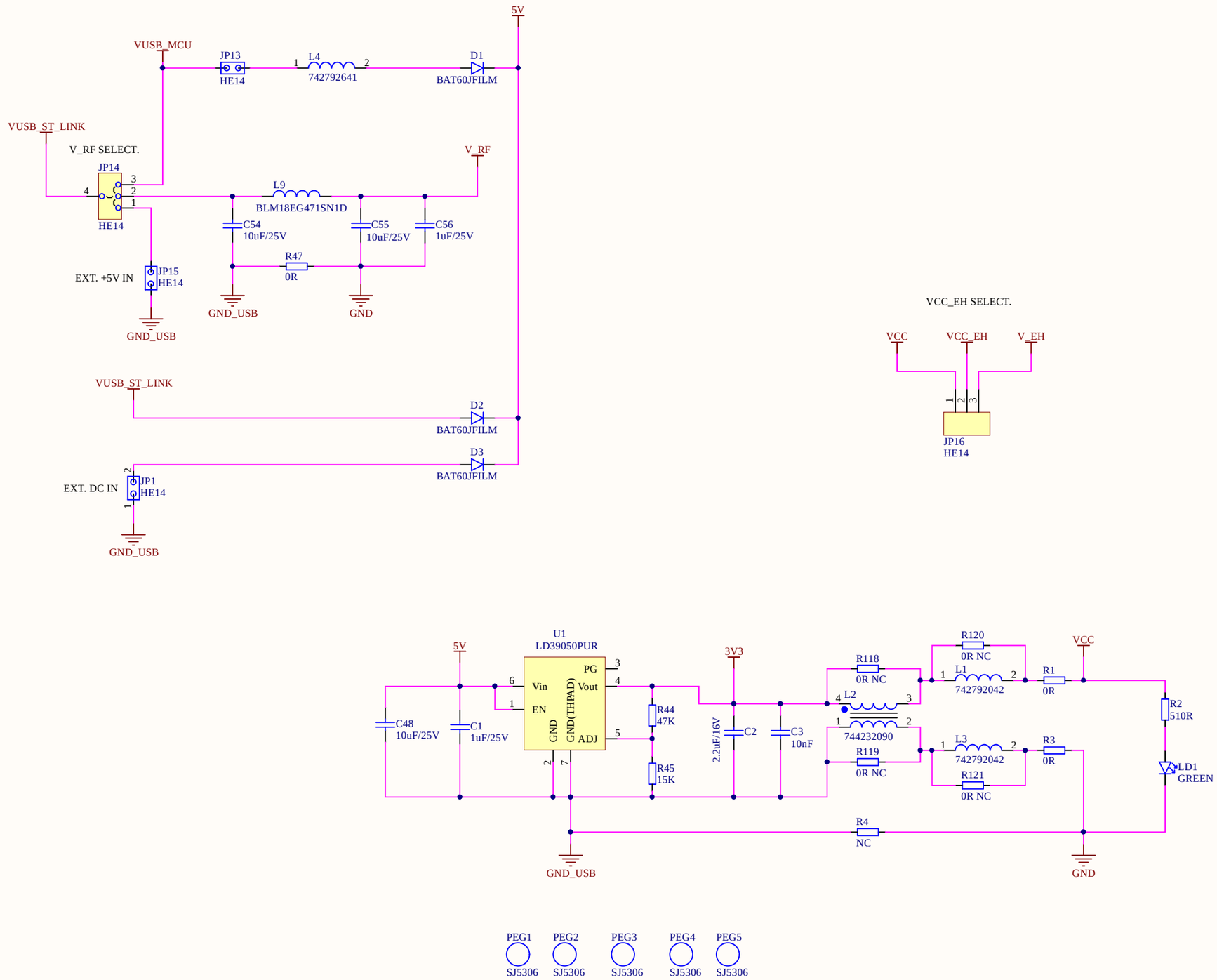

Title:	***ST25 DISCOVERY MBOARD*** Pwr Supply.SchDoc		STMicroelectronics 635, Route des Lucioles 06560 VALBONNE FRANCE
Size: A3	Reference: MB1396	Revision: B	
Date: 22/08/2018		Sheet: 2 of 10	

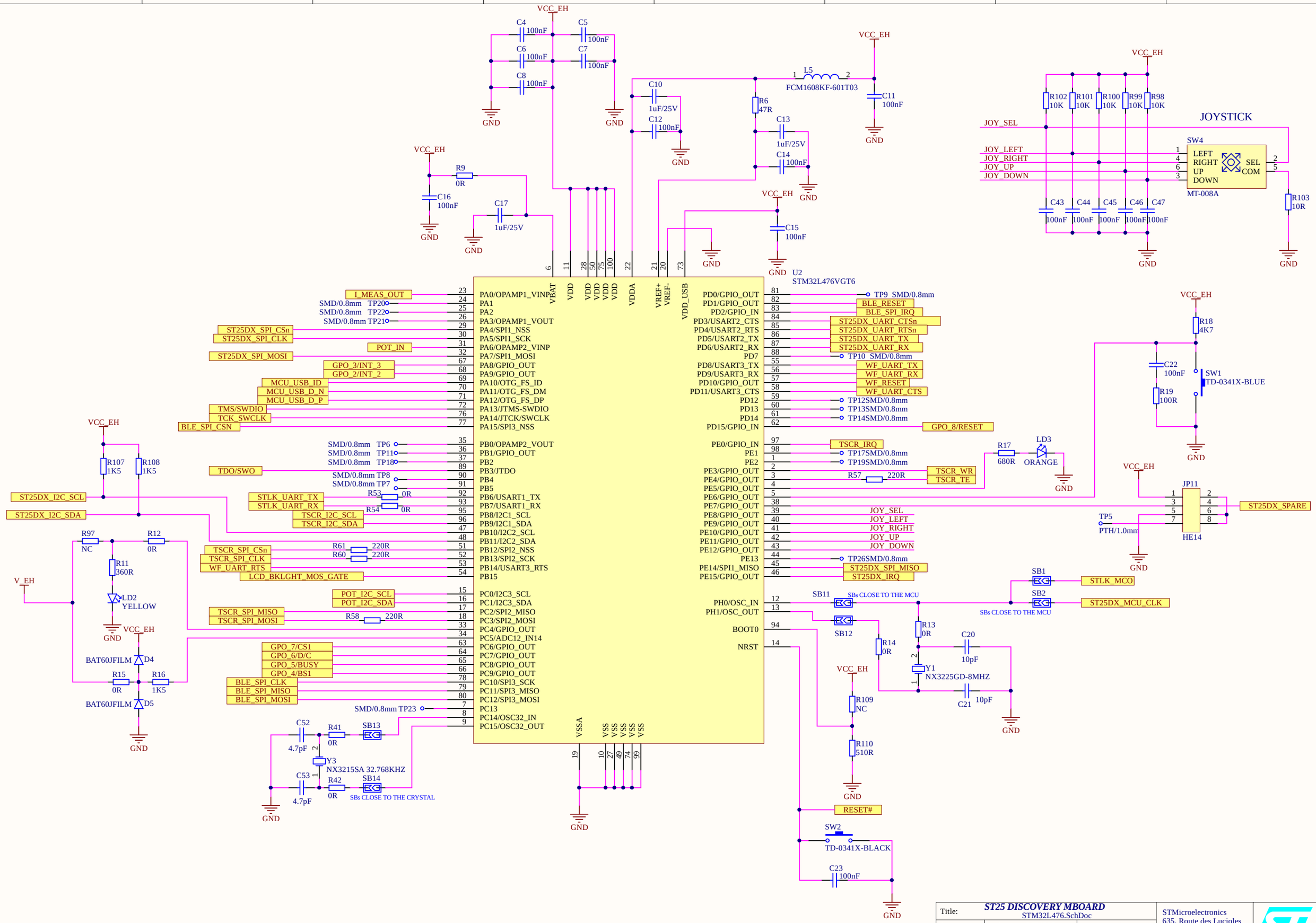

Title:	***ST25 DISCOVERY MBOARD*** STM32L476.SchDoc		STMicroelectronics 635, Route des Lucioles 06560 VALBONNE FRANCE
Size: A3	Reference: MB1396	Revision: B	
Date: 22/08/2018		Sheet: 3 of 10	

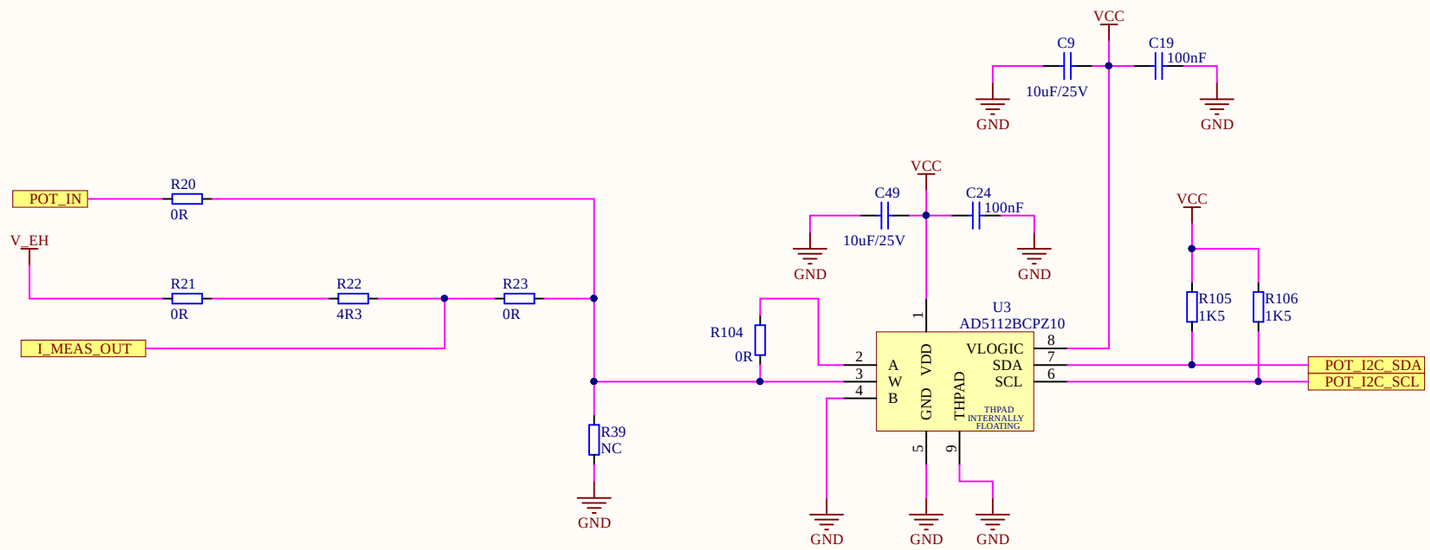

Title:	***ST25 DISCOVERY MBOARD*** EH.SchDoc		635, Route des Lucioles 06560 VALBONNE FRANCE
Size: A3	Reference: MB1396	Revision: B	
Date: 22/08/2018		Sheet: 4 of 10	

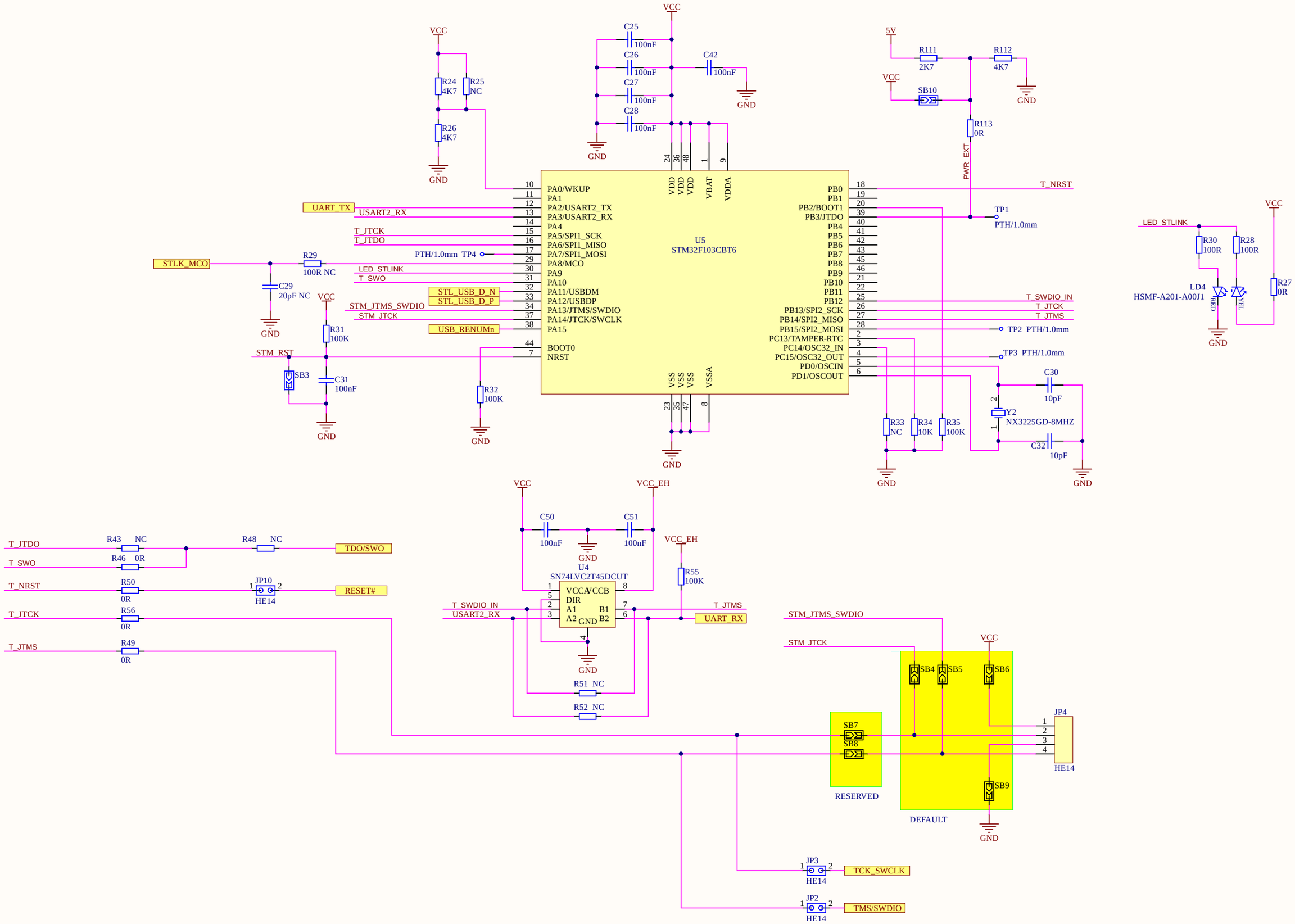

Title:	***ST25 DISCOVERY MBOARD*** STLink-Jtag.SchDoc		STMicroelectronics 635, Route des Lucioles 06560 VALBONNE FRANCE
Size: A3	Reference: MB1396	Revision: B	
Date: 22/08/2018		Sheet: 5 of 10	

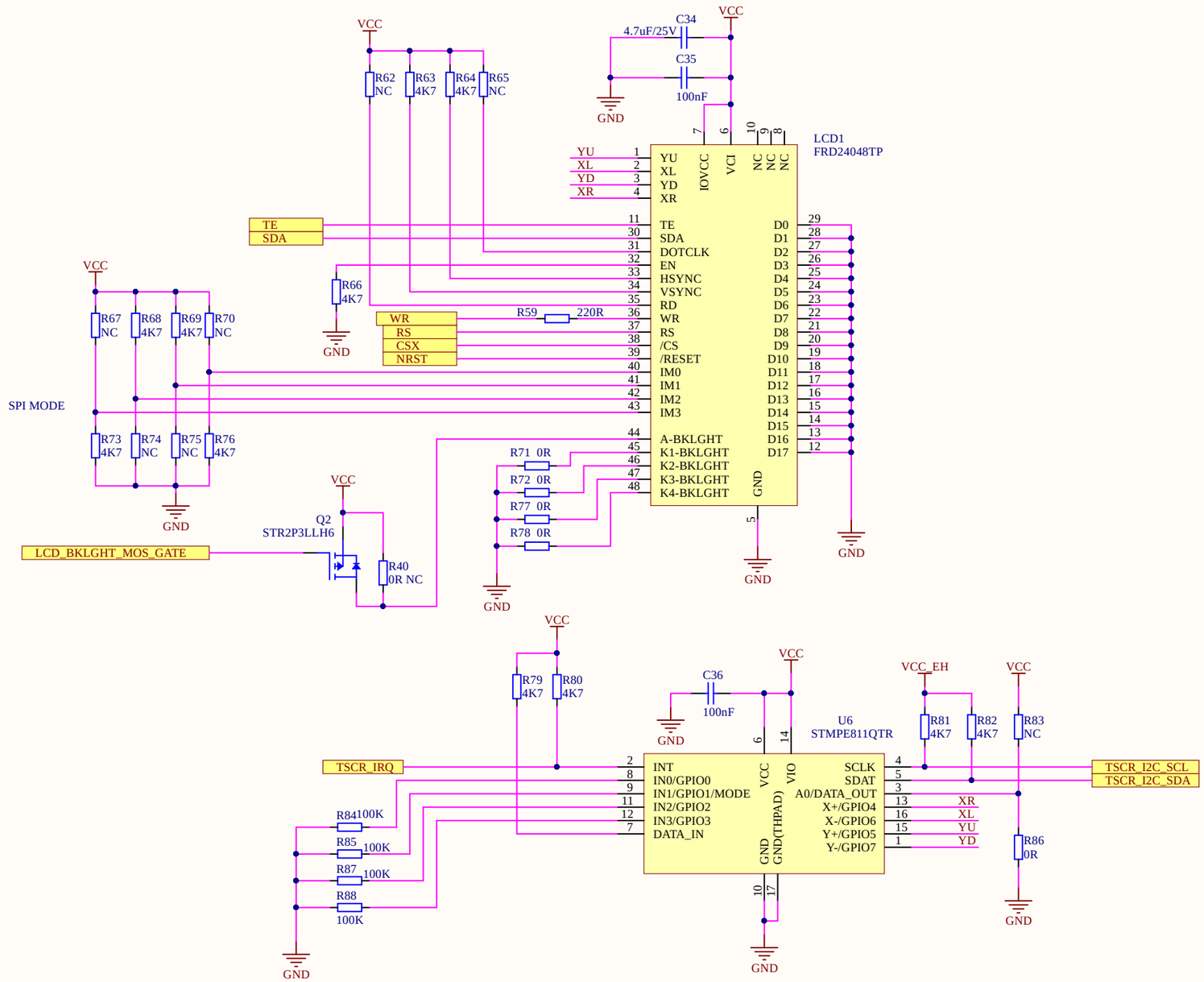

Title:	***ST25 DISCOVERY MBOARD*** LCD.SchDoc		STMicroelectronics 635, Route des Lucioles 06560 VALBONNE FRANCE
Size: A3	Reference: MB1396	Revision: B	
Date: 22/08/2018		Sheet: 6 of 10	

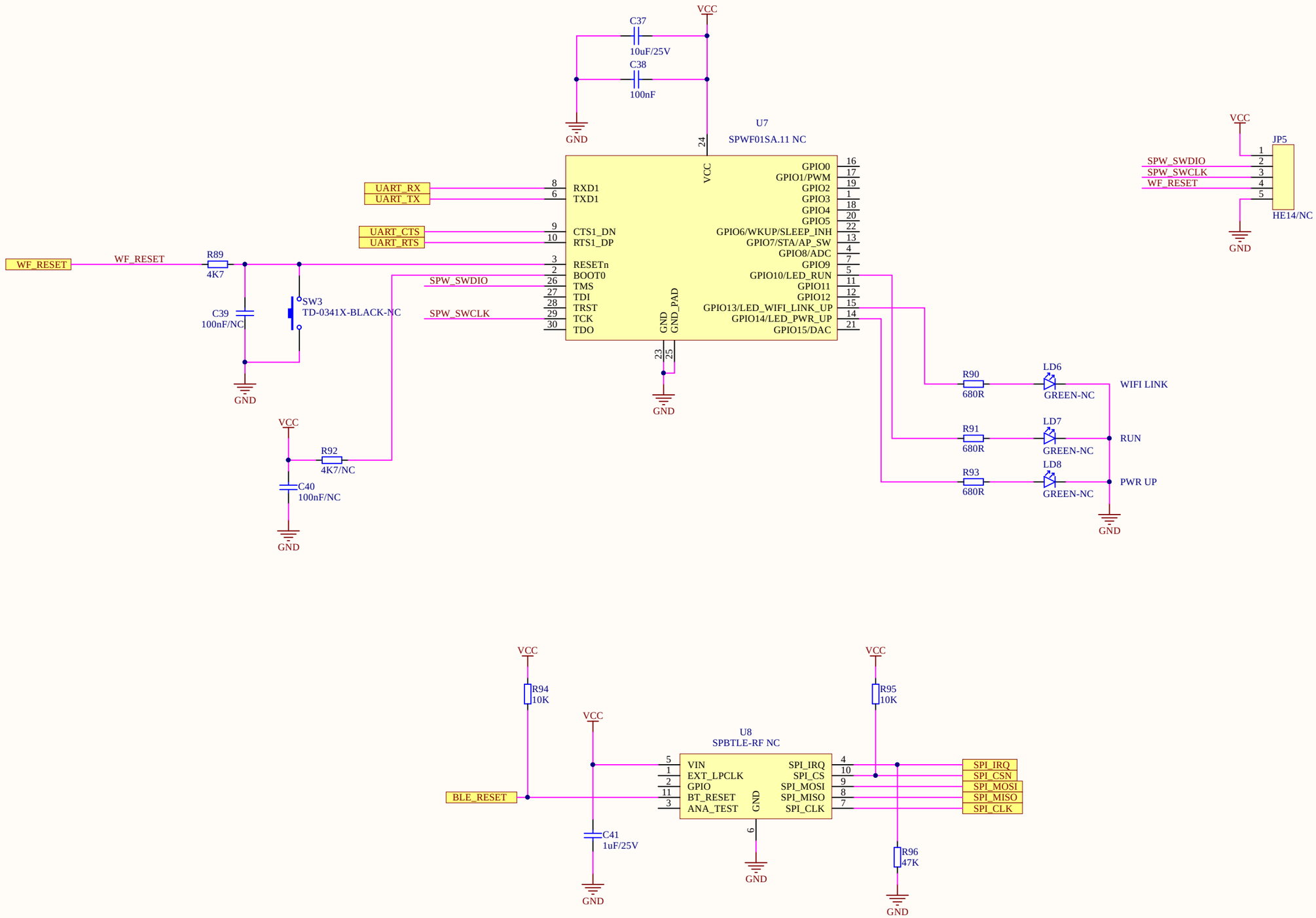

Title:	***ST25 DISCOVERY MBOARD*** WIFI-BLE.SchDoc		STMicroelectronics 635, Route des Lucioles 06560 VALBONNE FRANCE
Size: A3	Reference: MB1396	Revision: B	
Date: 22/08/2018		Sheet: 7 of 10	

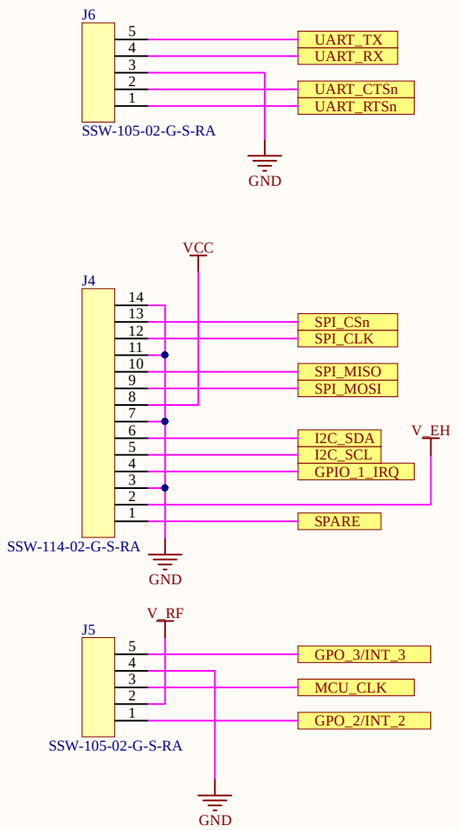

Title:	***ST25 DISCOVERY MBOARD*** ST25DX Connectors.SchDoc		STMicroelectronics 635, Route des Lucioles 06560 VALBONNE FRANCE
Size: A3	Reference: MB1396	Revision: B	
Date: 22/08/2018		Sheet: 8 of 10	

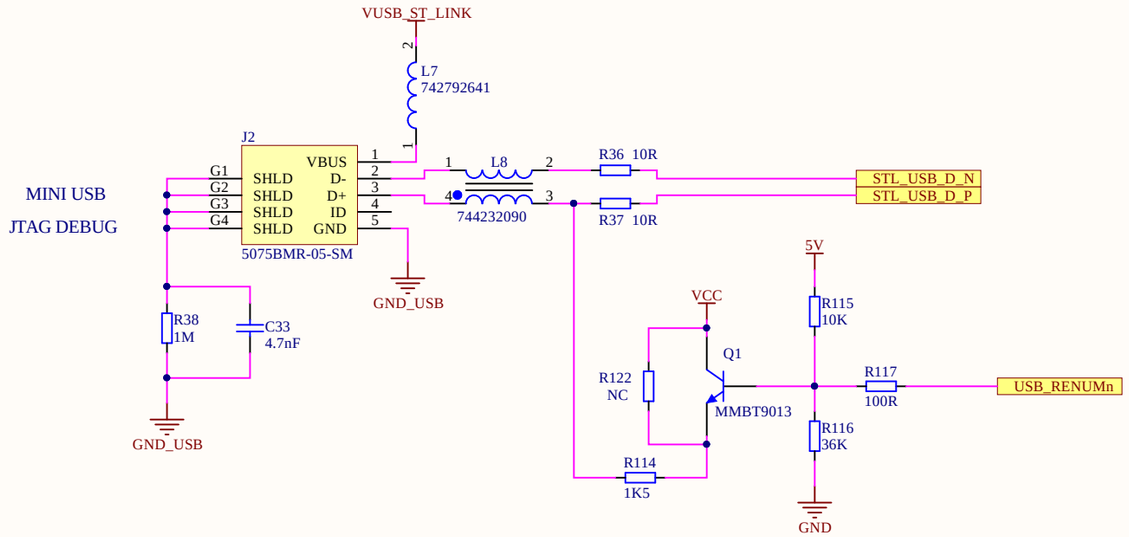

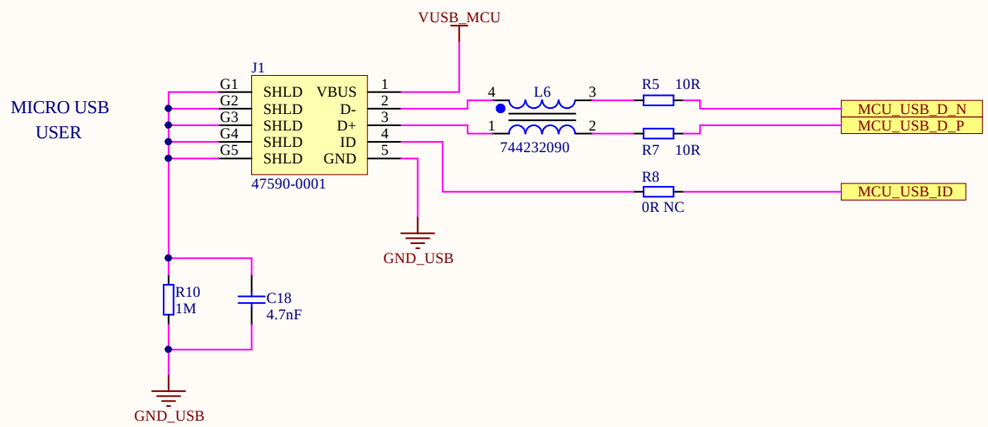

Title:	***ST25 DISCOVERY MBOARD*** USB.SchDoc		STMicroelectronics 635, Route des Lucioles 06560 VALBONNE FRANCE
Size: A3	Reference: MB1396	Revision: B	
Date: 22/08/2018		Sheet: 9 of 10	

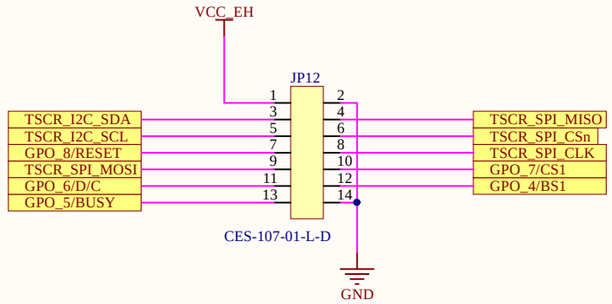

Title:	***ST25 DISCOVERY MBOARD*** E-Paper_Connector.SchDoc		STMicroelectronics 635, Route des Lucioles 06560 VALBONNE FRANCE
Size: A3	Reference: MB1396	Revision: B	
Date: 22/08/2018		Sheet: 10 of 10	