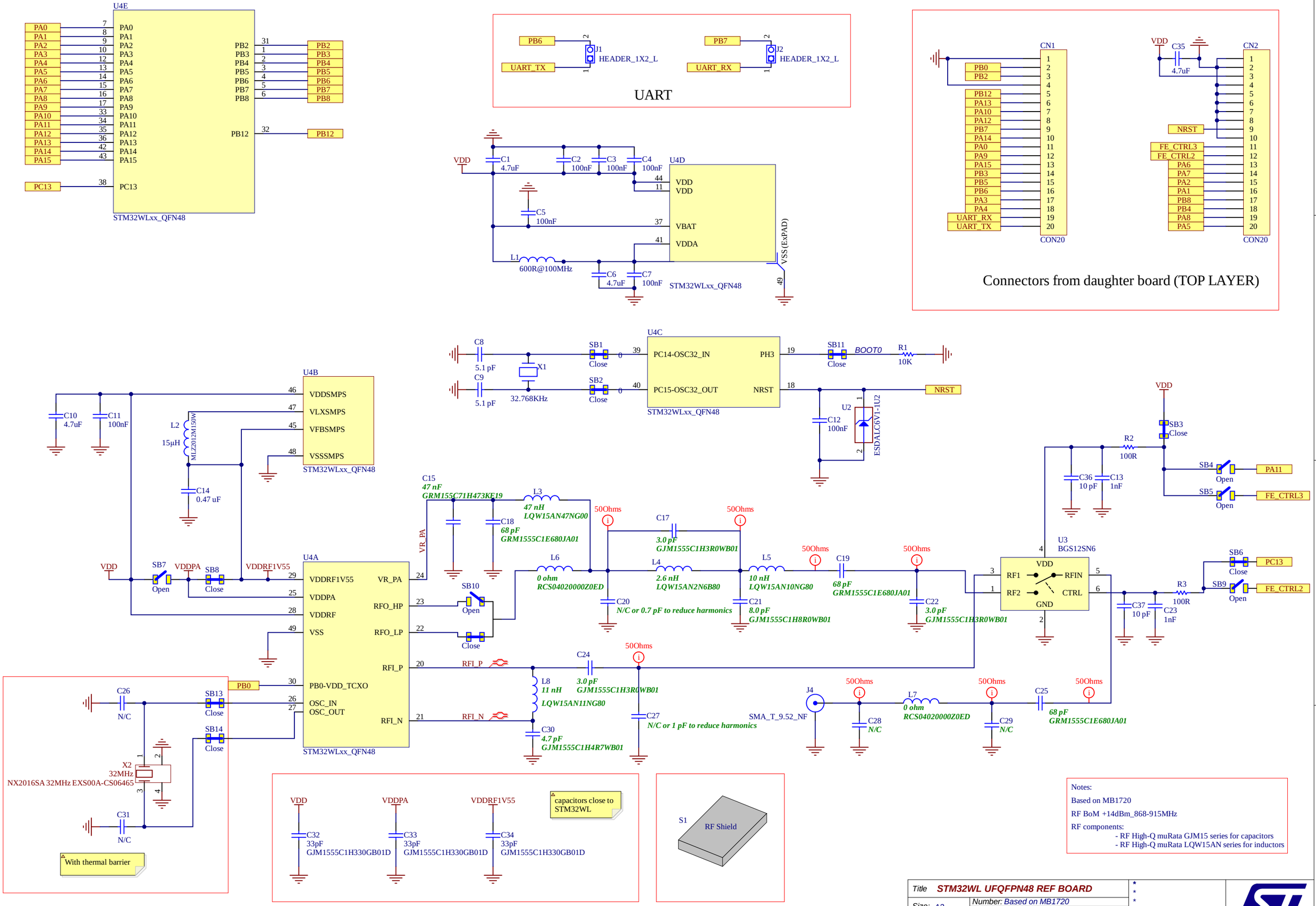
U4E
STM32WLxx_QFN48
PA0 PA1 PA2 PA3 PA4 PA5 PA6 PA7 PA8 PA9 PA10 PA11 PA12 PA13 PA14 PA15
PB2 PB3 PB4 PB5 PB6 PB7 PB8 PB12
PC13
UART
PB6 PB7 UART_TX UART_RX
J1 J2 HEADER_1X2_L
U4D
VDD VDD VBAT VDDA VSS (EXPAD)
C1 4.7uF C2 100nF C3 100nF C4 100nF C5 100nF C6 4.7uF C7 100nF
L1 600R@100MHz
Connectors from daughter board (TOP LAYER)
CN1 CON20
CN2 CON20
C35 4.7uF
NRST FE_CTRL3 FE_CTRL2
U4B
VDDSMPS VLXSMPS VFBSMPS VSSSMPS
C10 4.7uF C11 100nF C14 0.47 uF
L2 15µH MLZ2012M150W
U4C
PC14-OSC32_IN PC15-OSC32_OUT PH3 NRST
C8 5.1 pF C9 5.1 pF X1 32.768KHz
SB1 Close SB2 Close SB11 Close BOOT0 R1 10K
C12 100nF U2 ESDALC6V1-1U2
C15 47 nF GRM155C71H473KE19
L3 47 nH LQW15AN47NG00
C18 68 pF GRM1555C1E680JA01
L6 0 ohm RCS04020000Z0ED
C17 3.0 pF GJM1555C1H3R0WB01
L4 2.6 nH LQW15AN2N6B80
L5 10 nH LQW15AN10NG80
C19 68 pF GRM1555C1E680JA01
C20 N/C or 0.7 pF to reduce harmonics
C21 8.0 pF GJM1555C1H8R0WB01
C22 3.0 pF GJM1555C1H3R0WB01
50Ohms
U3 BGS12SN6
RF1 RF2 RFIN CTRL GND
SB3 Close R2 100R
C36 10 pF C13 1nF
SB4 Open PA11
SB5 Open FE_CTRL3
SB6 Close PC13
SB9 Open FE_CTRL2
R3 100R
C37 10 pF C23 1nF
U4A
VDDRF1V55 VDDPA VDDRF VSS VR_PA RFO_HP RFO_LP RFI_P RFI_N PB0-VDD_TCXO OSC_IN OSC_OUT
SB7 Open SB8 Close SB10 Open Close
RFI_P RFI_N
C24 3.0 pF GJM1555C1H3R0WB01
L8 11 nH LQW15AN11NG80
C30 4.7 pF GJM1555C1H4R7WB01
C27 N/C or 1 pF to reduce harmonics
J4 SMA_T_9.52_NF
C28 N/C
L7 0 ohm RCS04020000Z0ED
C29 N/C
C25 68 pF GRM1555C1E680JA01
C26 N/C SB13 Close SB14 Close
X2 32MHz NX2016SA 32MHz EXS00A-CS06465
C31 N/C
With thermal barrier
capacitors close to STM32WL
C32 33pF GJM1555C1H330GB01D
C33 33pF GJM1555C1H330GB01D
C34 33pF GJM1555C1H330GB01D
S1 RF Shield
Notes:
Based on MB1720
RF BoM +14dBm_868-915MHz
RF components:
- RF High-Q muRata GJM15 series for capacitors
- RF High-Q muRata LQW15AN series for inductors
Title STM32WL UFQFPN48 REF BOARD
Size: A3
Number: Based on MB1720
Revision: A
Date: 21-Dec-20 Time:1:26:08 AM Sheet 1 of 1