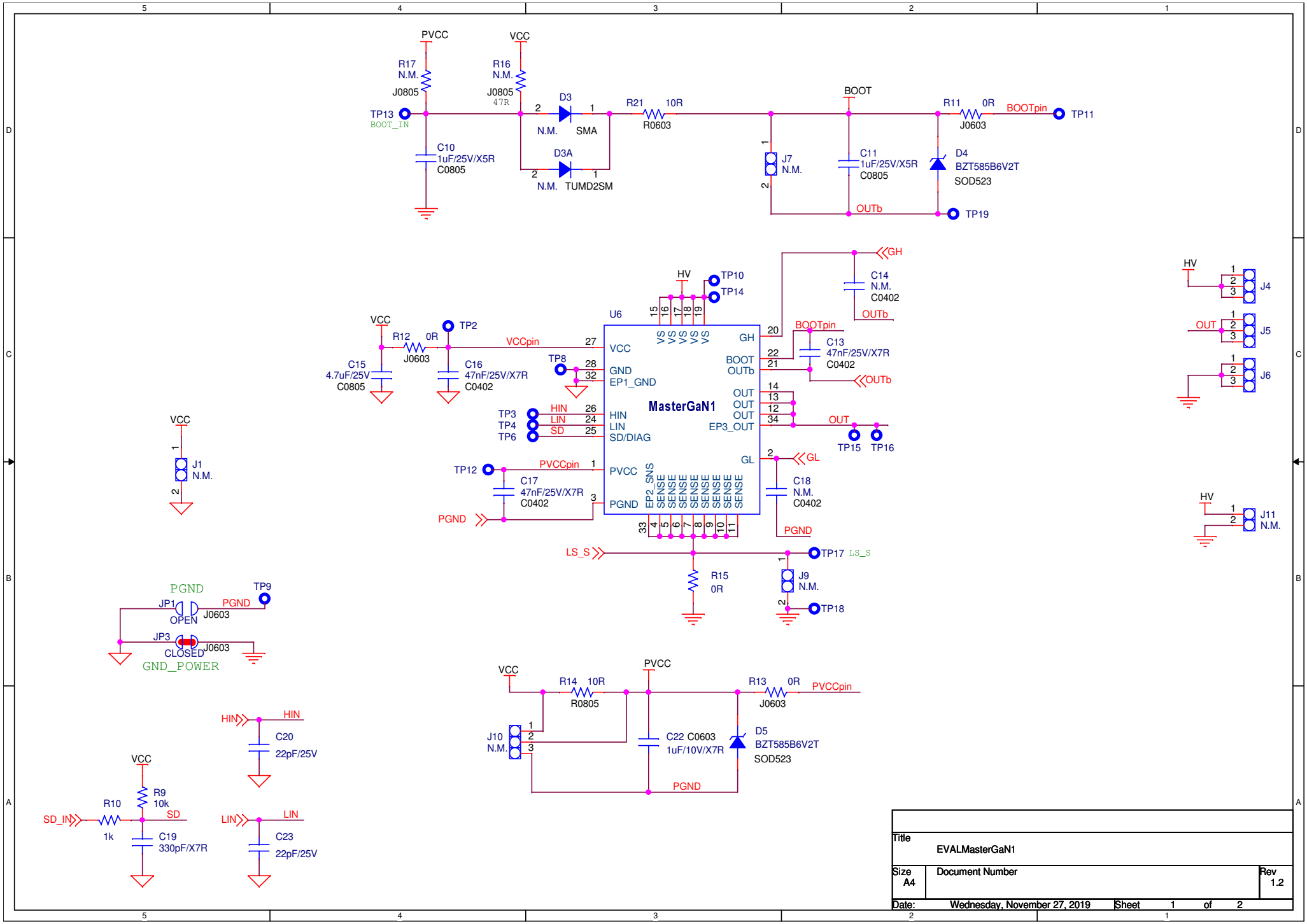

Title	EVALMasterGaN1	
Size A4	Document Number	Rev 1.2
Date: Wednesday, November 27, 2019	Sheet 1 of 2	

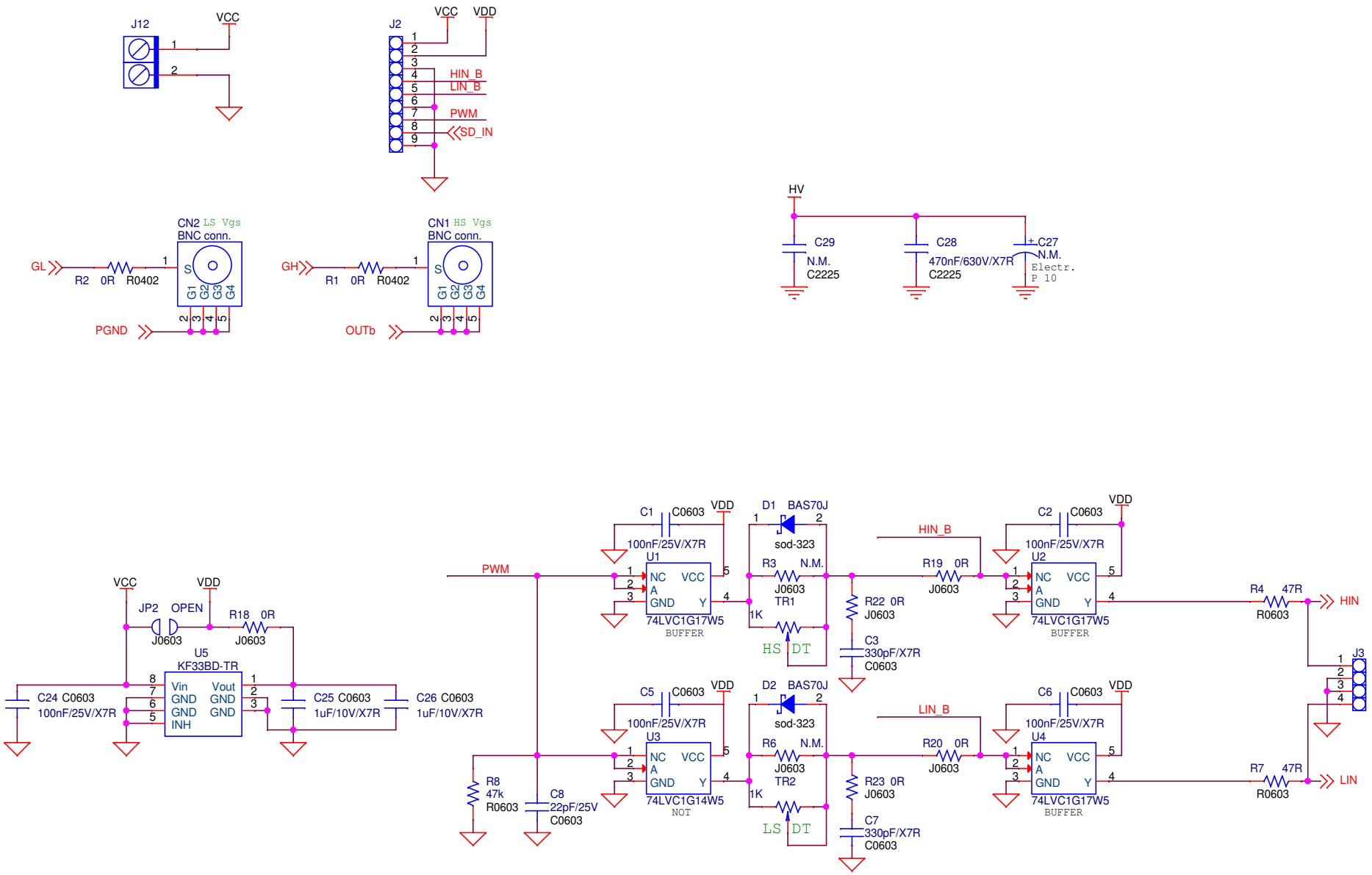

Title	EVALMasterGaN1	
Size A4	Document Number	Rev 1.2
Date: Tuesday, November 27, 2019	Sheet 2 of 2	