# STM32MP157 EVAL

## MB1263

## Table of contents


Sheet 1: Project (this page)

Sheet 2: Top

Sheet 3: STM32 MPU I/Os

Sheet 4: Power MPU

Sheet 5: Power PMIC

Sheet 6: Samtec connectors

Sheet 7: SD3 card

Sheet 8: DDR3

Sheet 9: eMMC

Sheet 10: ST-Link_V2.1

Sheet 11: Peripherals


## Legend

New in RevC : OSC X6, R100/R900/R901 pull-up, CN3 3x2
New in C-04 : U4 -> STM32MP157FAA1, U3 -> STPMIC1APQR, C42/C43/C93 -> 2.2uF

Text to be added to silkscreen.
Warning text.

Notes to generate the board layout.

## Open Platform License Agreement


The Open Platform License Agreement (“Agreement”) is a binding legal contract between you ("You") and STMicroelectronics International N.V. (“ST”), a company incorporated under the laws of the Netherlands acting for the purpose of this Agreement through its Swiss branch 39, Chemin du Champ des Filles, 1228 Plan-les-Ouates, Geneva, Switzerland.

By using the enclosed reference designs, schematics, PC board layouts, and documentation, in hardcopy or CAD tool file format (collectively, the “Reference Material”), You are agreeing to be bound by the terms and conditions of this Agreement. Do not use the Reference Material until You have read and agreed to this Agreement terms and conditions. The use of the Reference Material automatically implies the acceptance of the Agreement terms and conditions.

The complete Open Platform License Agreement can be found on www.st.com/opla.


U_MB1263-TOP
MB1263-TOP.SchDoc

| | | |
|---|---|---|
| Title: **MB1263** | | |
| Project: **STM32MP157 EVAL** | | |
| Variant: [No Variations] | | |
| Revision: C-04 | | Reference: MB1263 |
| Size: A4 | Date: 10-SEP-19 | Sheet: 1 of 11 |

life.augmented

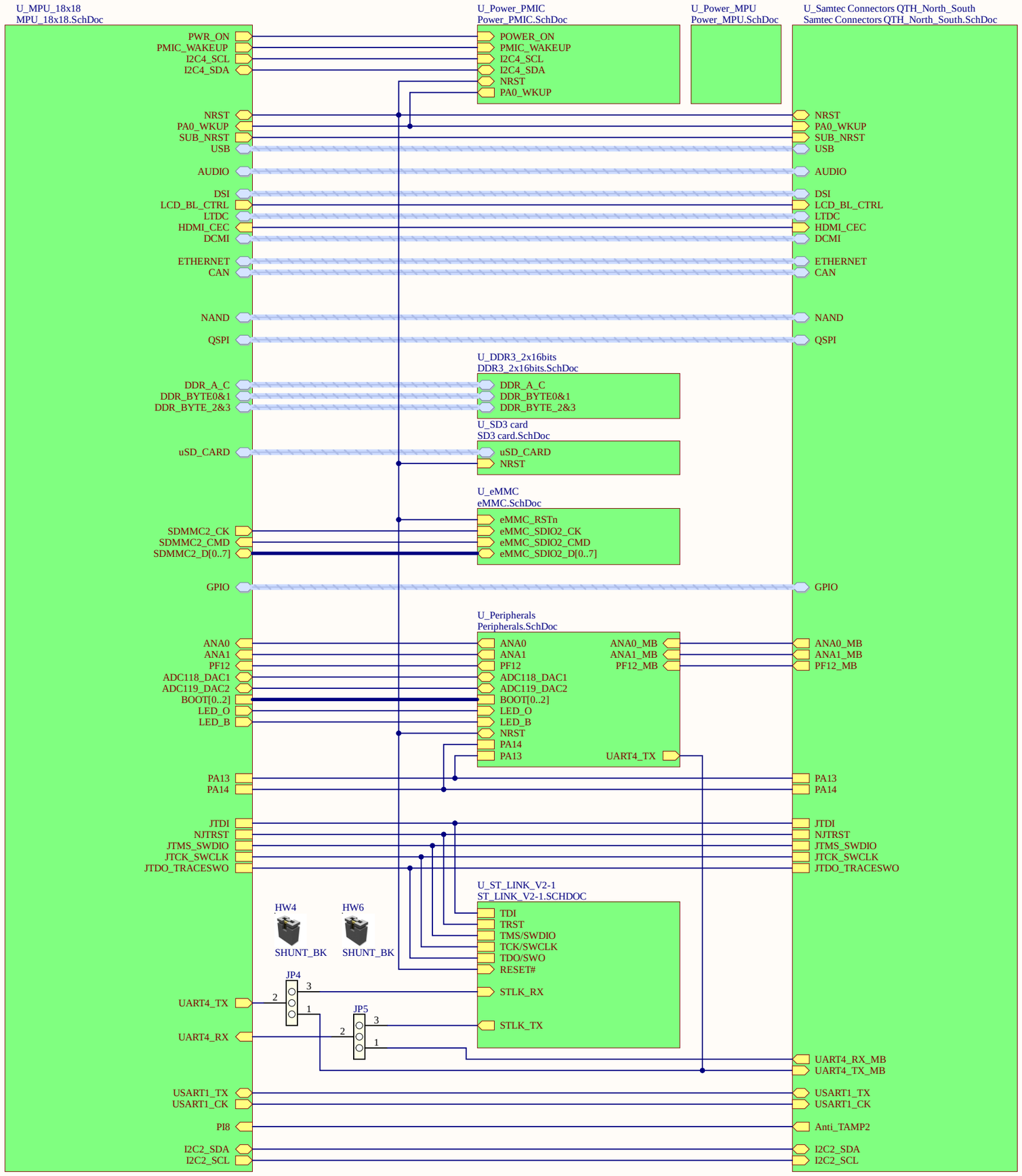


| | | |
|---|---|---|
| Title: **MB1263-TOP** | | |
| Project: **STM32MP157-EVAL** | | |
| Size: A3 | Reference: MB1263 | Revision: C-04 |
| Date: 10/09/2019 | | Sheet: 2 of 11 |

life.augmented

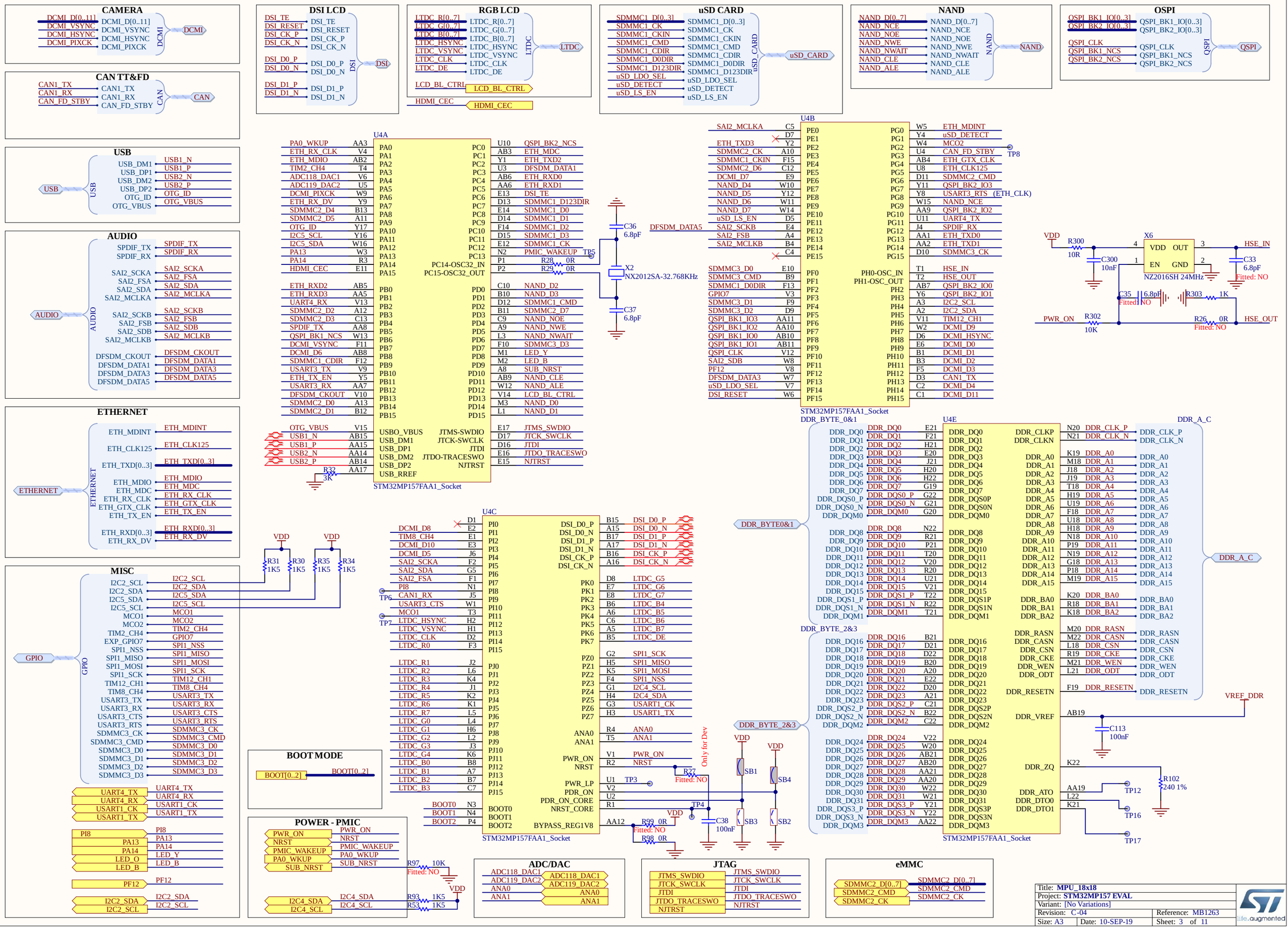


| | |
|---|---|
| Title: MPU_18x18 | |
| Project: STM32MP157 EVAL | |
| Variant: [No Variations] | |
| Revision: C-04 | Reference: MB1263 |
| Size: A3 | Date: 10-SEP-19 | Sheet: 3 of 11 |

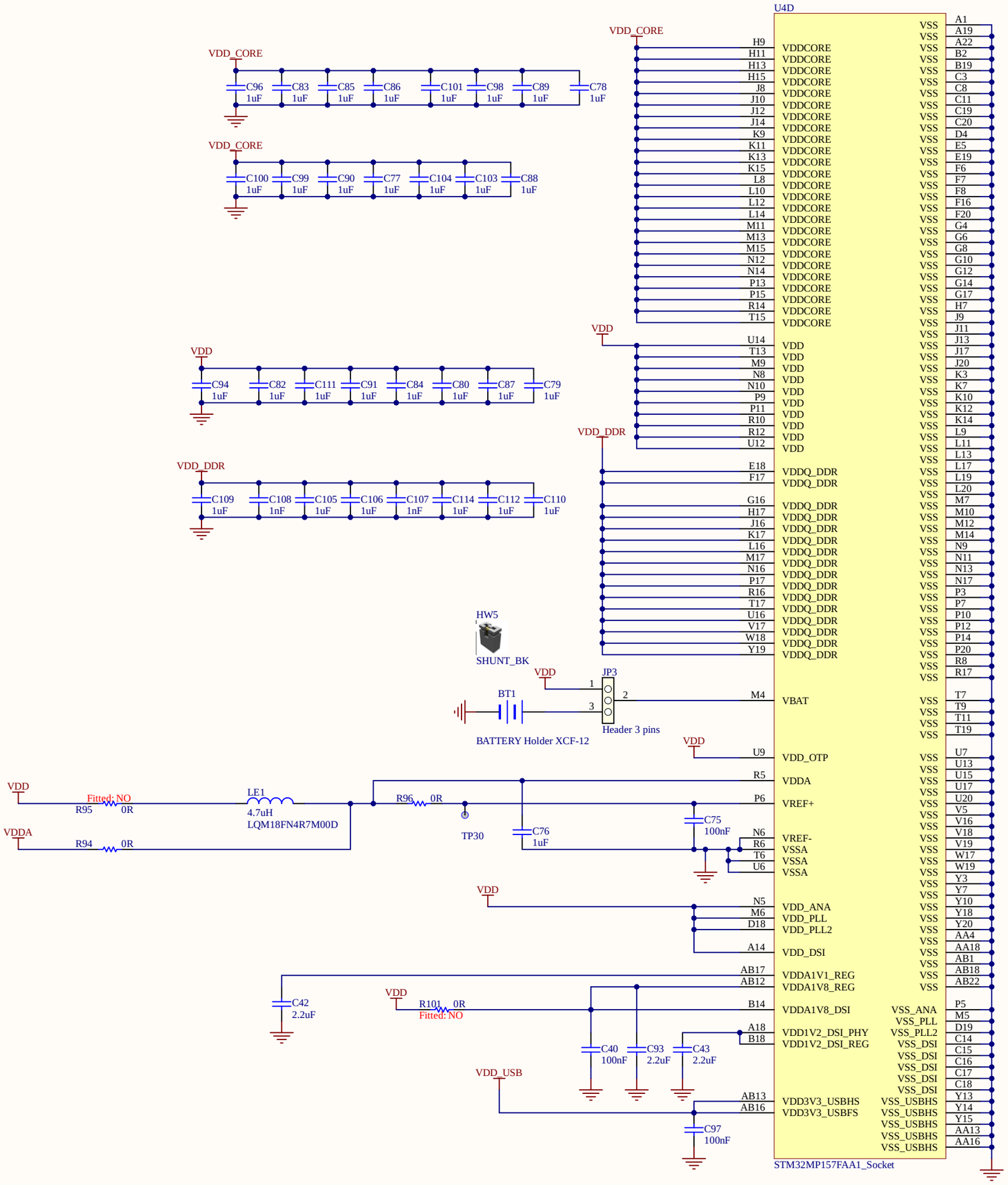


| | | |
|---|---|---|
| Title: **Power_MPU** | | |
| Project: **STM32MP157 EVAL** | | |
| Variant: [No Variations] | | |
| Revision: C-04 | | Reference: MB1263 |
| Size: A3 | Date: 10-SEP-19 | Sheet: 4 of 11 |

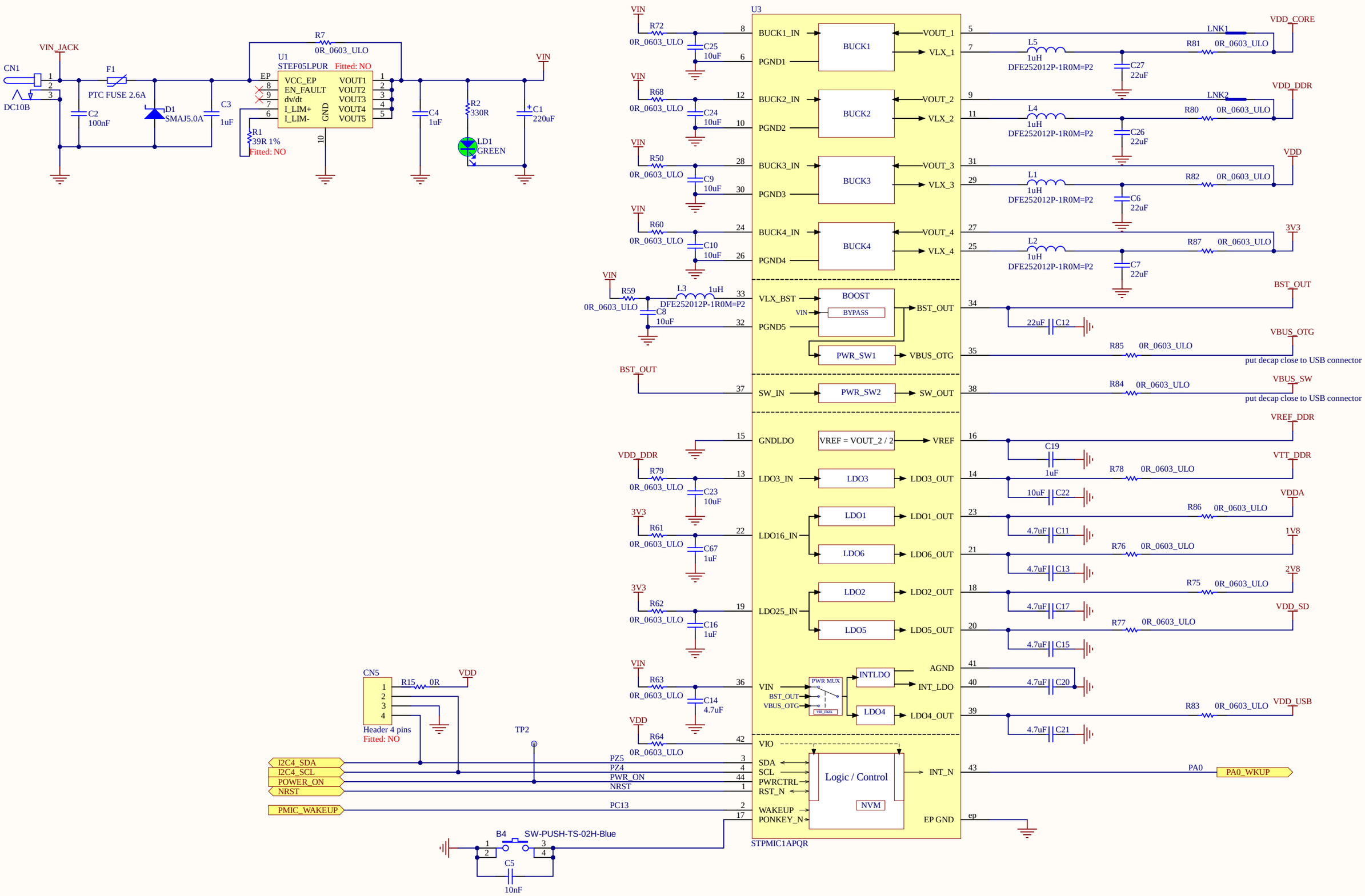


| | | |
|---|---|---|
| Title: **PMIC** | | |
| Project: **STM32MP157 EVAL** | | |
| Variant: [No Variations] | | |
| Revision: C-04 | | Reference: MB1263 |
| Size: A3 | Date: 10-SEP-19 | Sheet: 5 of 11 |

life.augmented

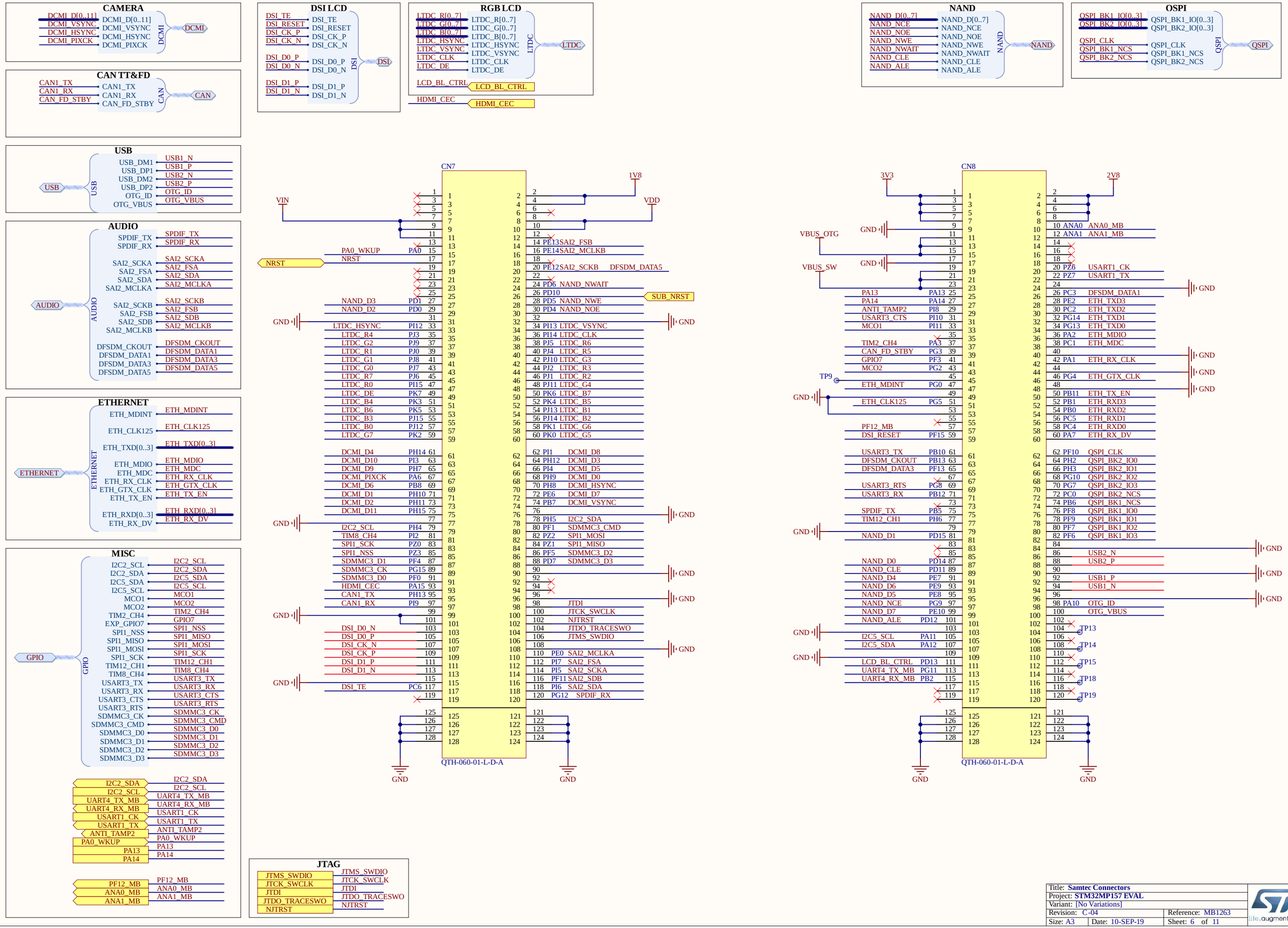


| | |
|---|---|
| Title: **Samtec Connectors** | |
| Project: **STM32MP157 EVAL** | |
| Variant: [No Variations] | |
| Revision: C-04 | Reference: MB1263 |
| Size: A3 Date: 10-SEP-19 | Sheet: 6 of 11 |

# MICRO SD 3.0 Card

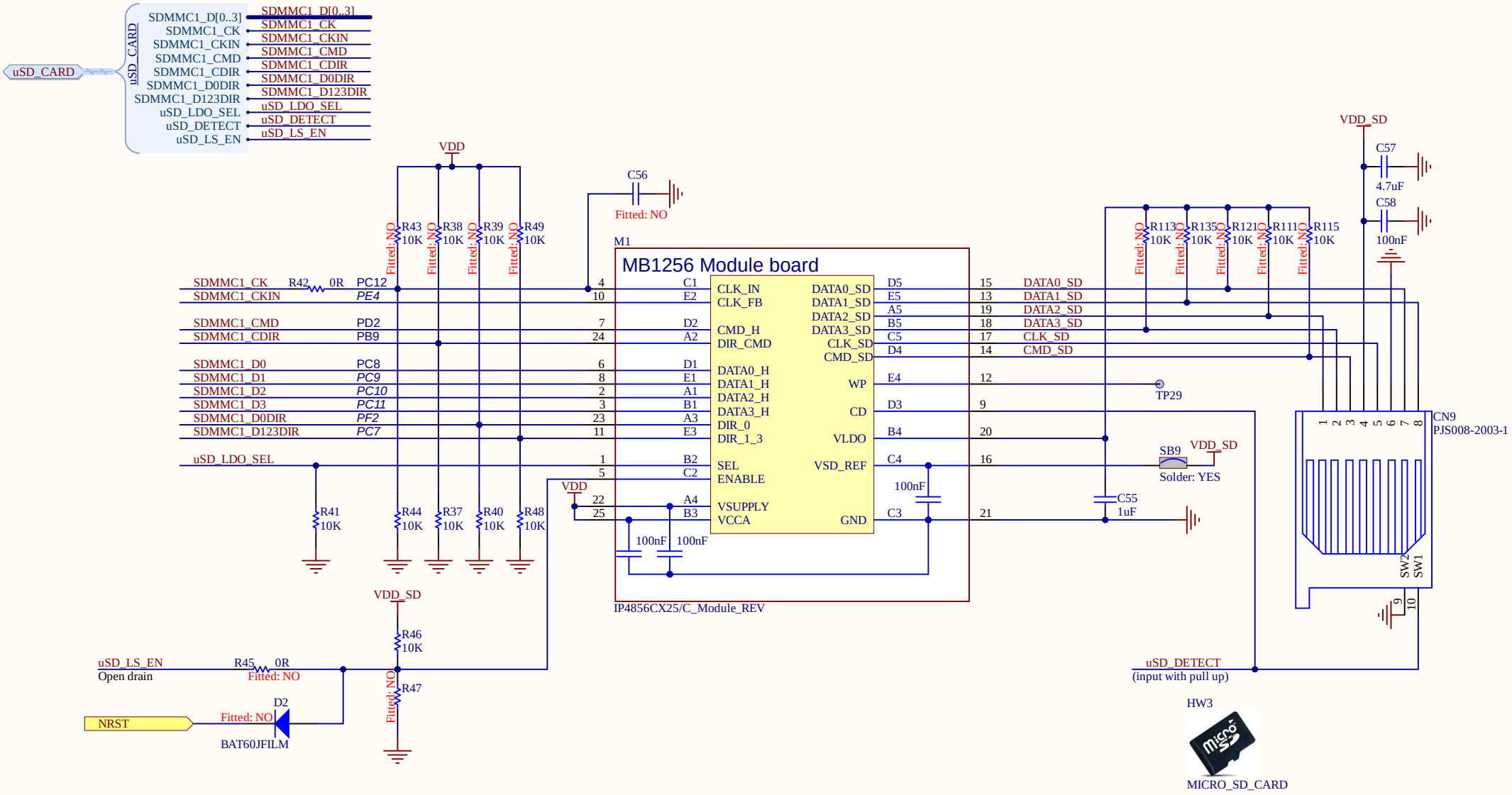


| | | |
|---|---|---|
| Title: **MICRO SD 3.0 Card** | | |
| Project: **STM32MP157 EVAL** | | |
| Variant: [No Variations] | | |
| Revision: C-04 | | Reference: MB1263 |
| Size: A4 | Date: 10-SEP-19 | Sheet: 7 of 11 |

life.augmented

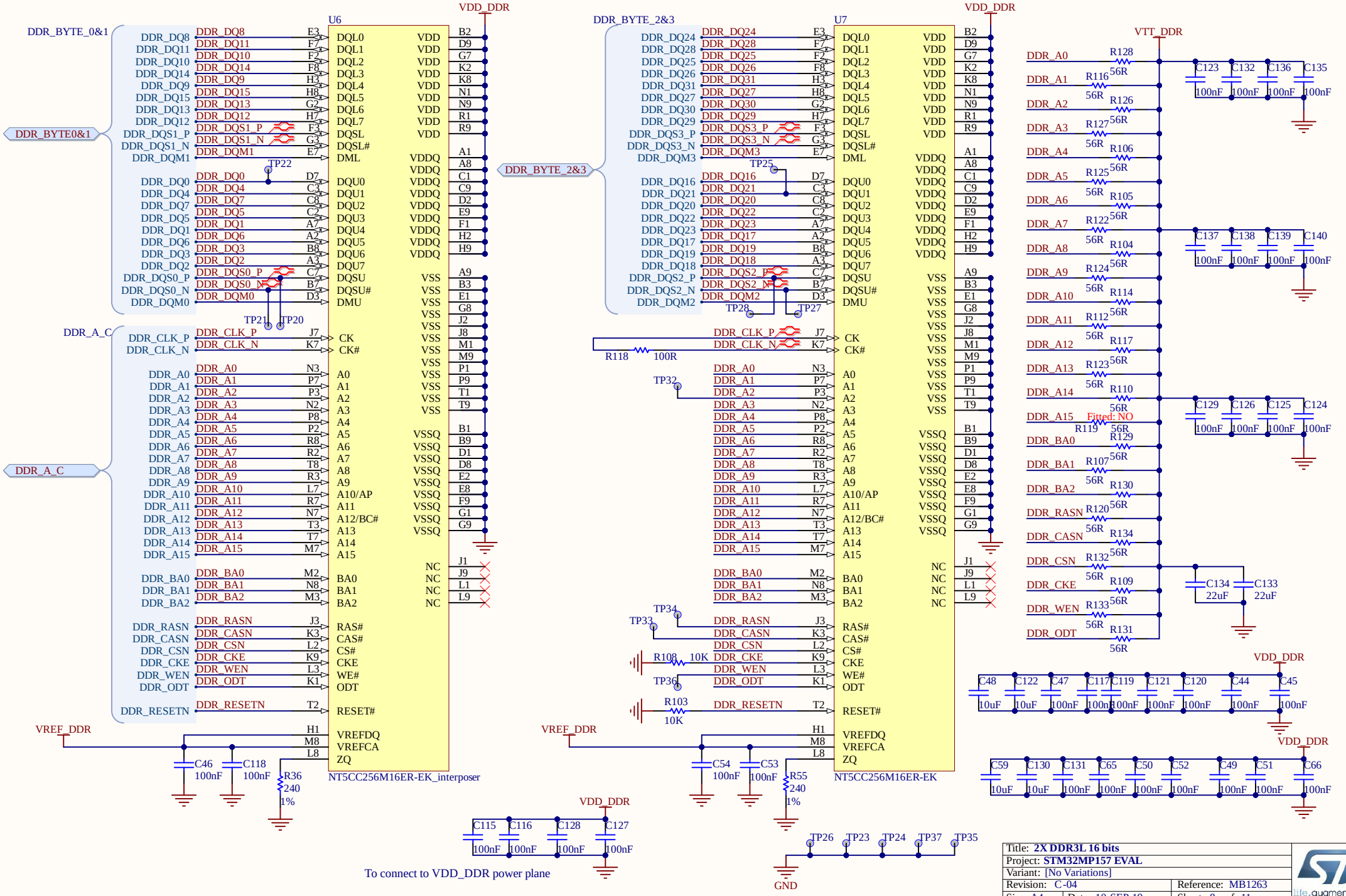


| | |
|---|---|
| Title: **2X DDR3L 16 bits** | |
| Project: **STM32MP157 EVAL** | |
| Variant: [No Variations] | |
| Revision: C-04 | Reference: MB1263 |
| Size: A4 Date: 10-SEP-19 | Sheet: 8 of 11 |

# eMMC

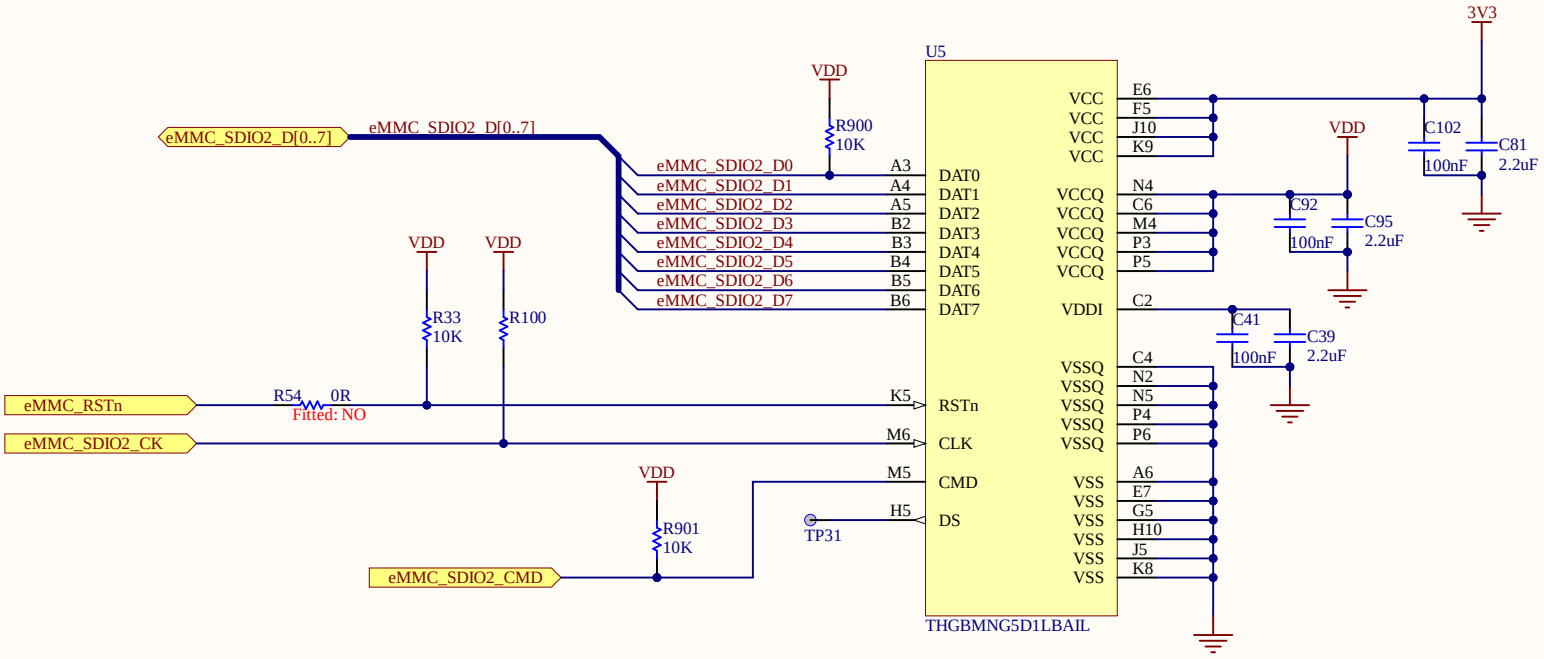


| | | |
|---|---|---|
| Title: **eMMC** | | |
| Project: **STM32MP157 EVAL** | | |
| Variant: [No Variations] | | |
| Revision: C-04 | | Reference: MB1263 |
| Size: A4 | Date: 10-SEP-19 | Sheet: 9 of 11 |

life.augmented

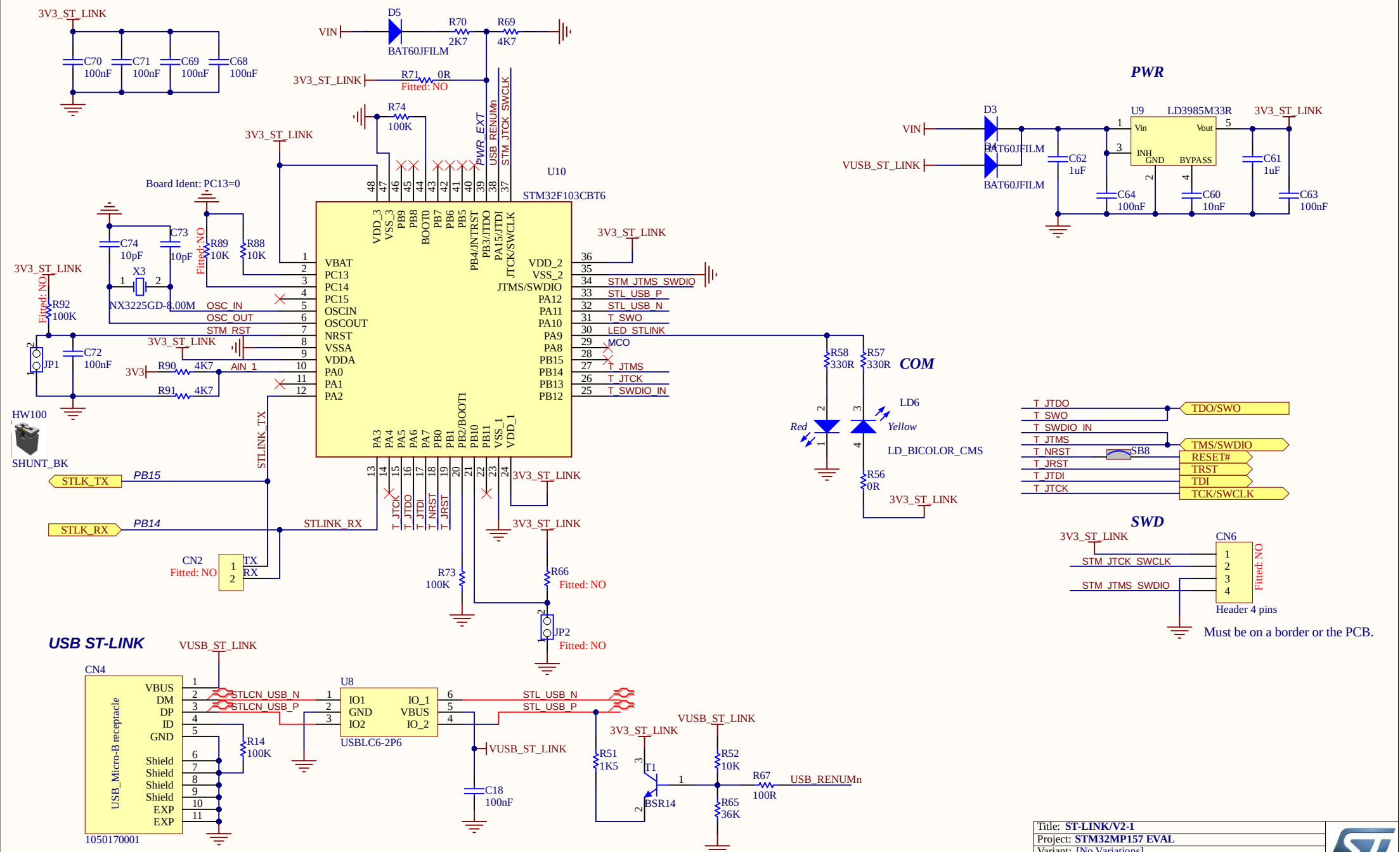


| | | |
|---|---|---|
| Title: **ST-LINK/V2-1** | | |
| Project: **STM32MP157 EVAL** | | |
| Variant: [No Variations] | | |
| Revision: C-04 | | Reference: MB1263 |
| Size: A4 | Date: 10-SEP-19 | Sheet: 10 of 11 |

## RESET BUTTON

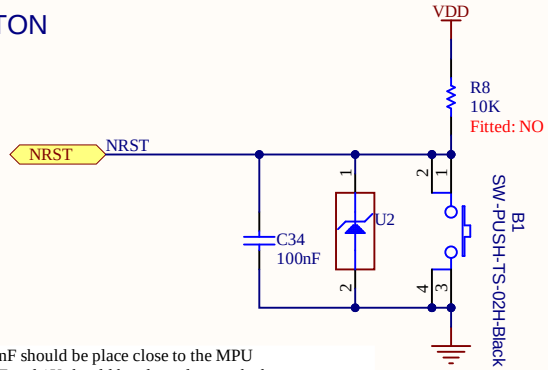


100nF should be place close to the MPU
10pF and 1K should be place close to the button

## BOOT MODE

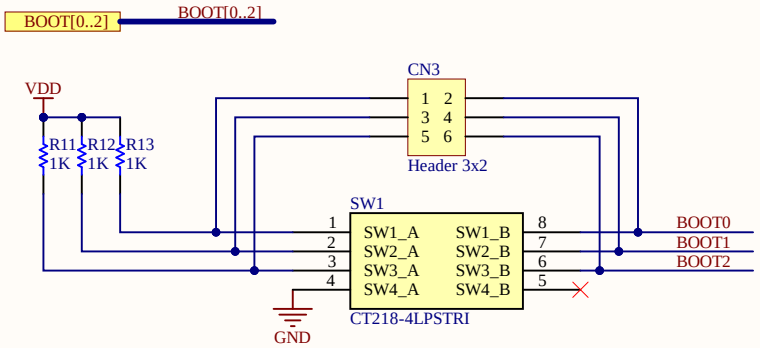


Cannot open file C:\Users\vanoost\Desktop\Boot.PNG

## ADC/DAC

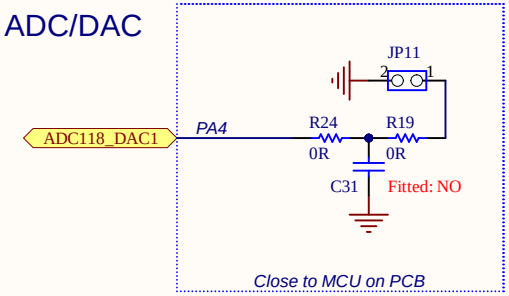


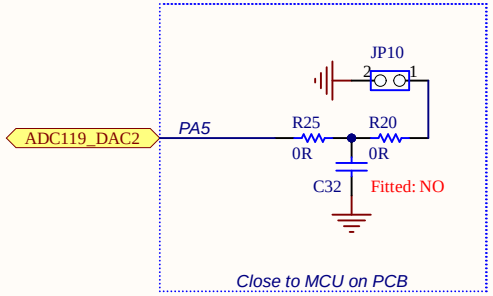


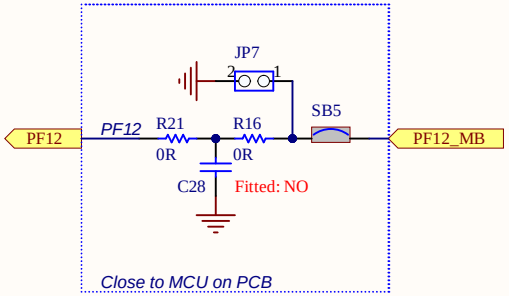


## Fast ADC

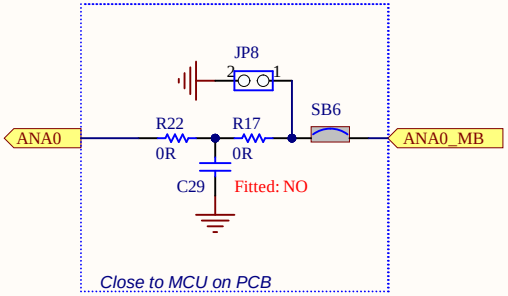


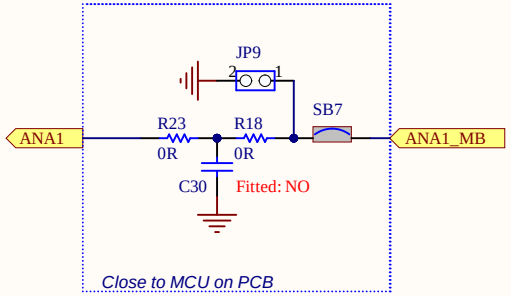


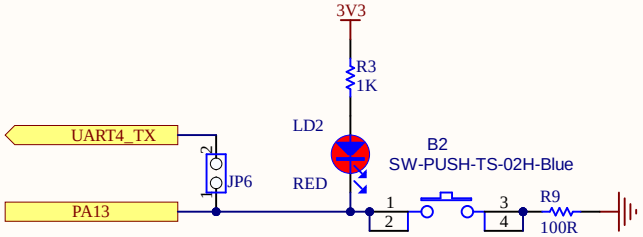


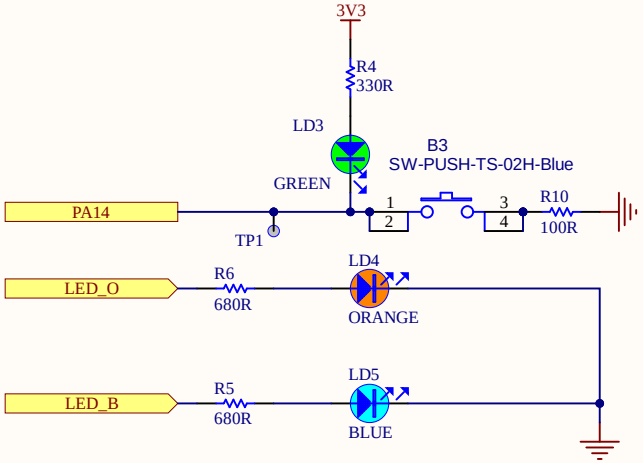


HW2

PCB

mb1263 PCB 6L

| | | |
|---|---|---|
| Title: **Peripherals** | | |
| Project: **STM32MP157 EVAL** | | |
| Variant: [No Variations] | | |
| Revision: C-04 | | Reference: MB1263 |
| Size: A4 | Date: 10-SEP-19 | Sheet: 11 of 11 |

life.augmented

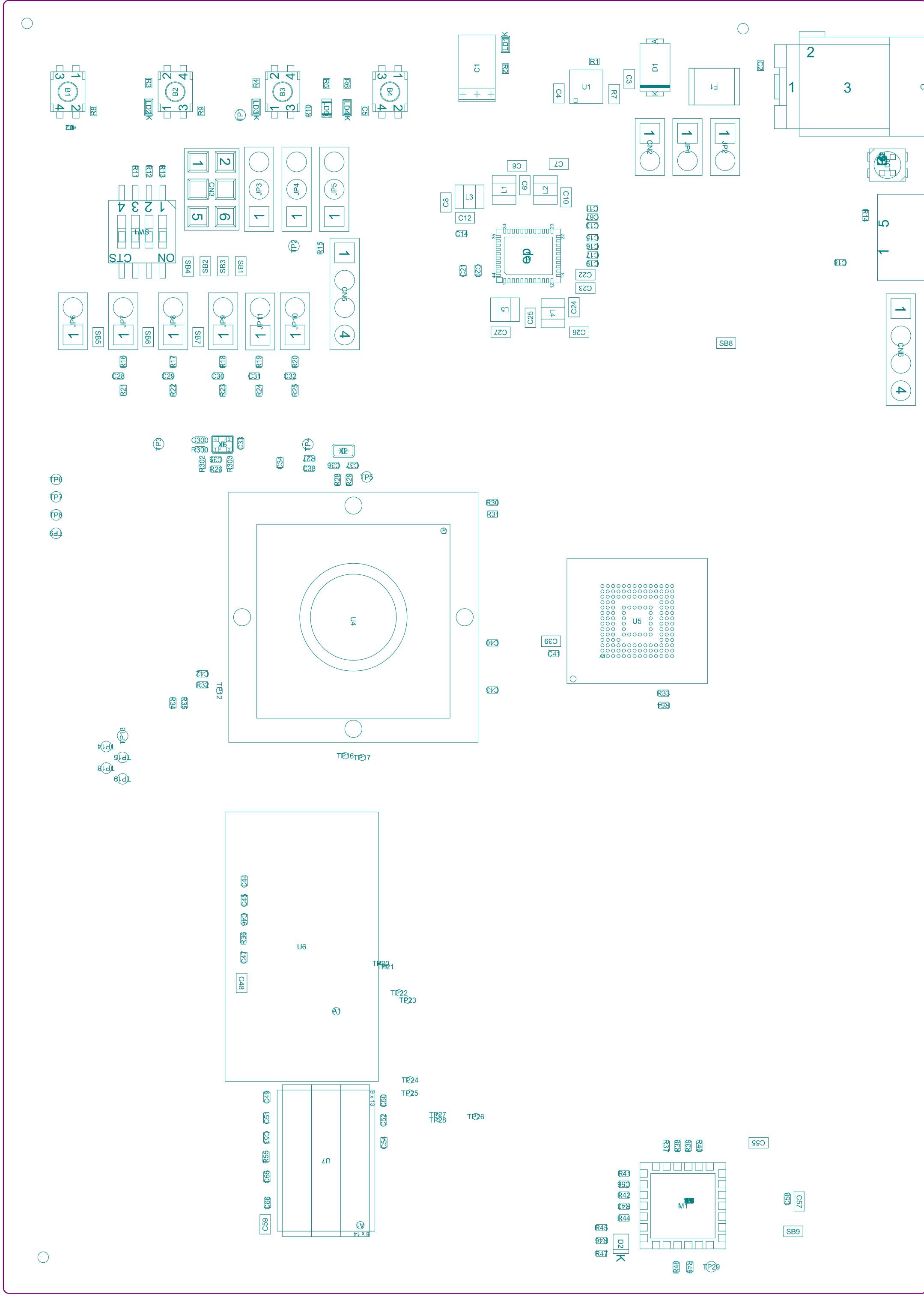


| | |
|---|---|
| Project: STM32MP157 EVAL | |
| Layer: M14-Top Assembly | Gerber: .GM14 |
| Variant: [No Variations] | Ref: MB1263 |
| Date: 18-OCTOBER-08 | Rev: C |

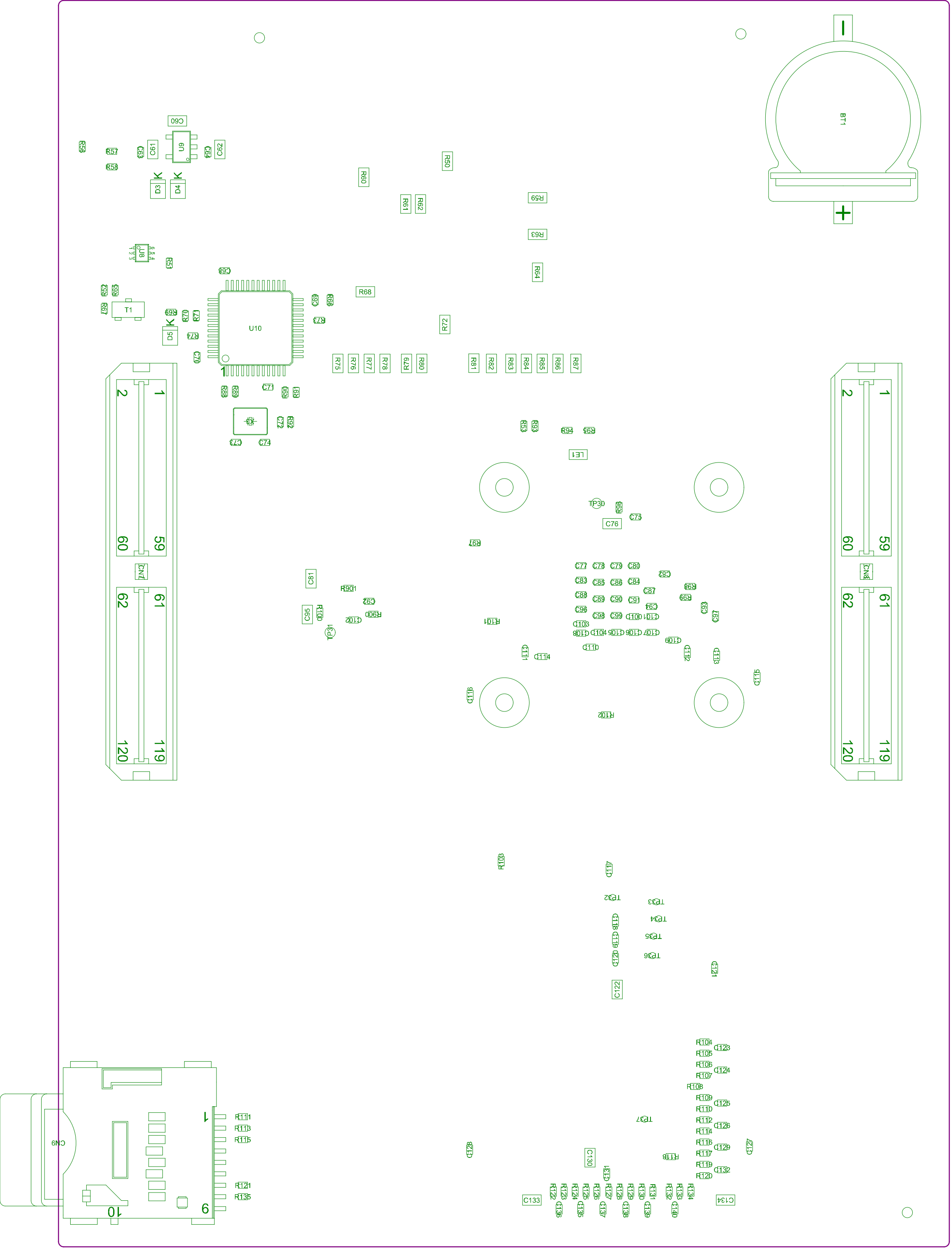


| | |
|---|---|
| Project: STM32MP157 EVAL | |
| Layer: M15-Bottom Assembly | Gerber:.GM15 |
| Variant: [No Variations] | Ref: MB1263 |
| Date: 18-OCTOBER-08 | Rev: C |

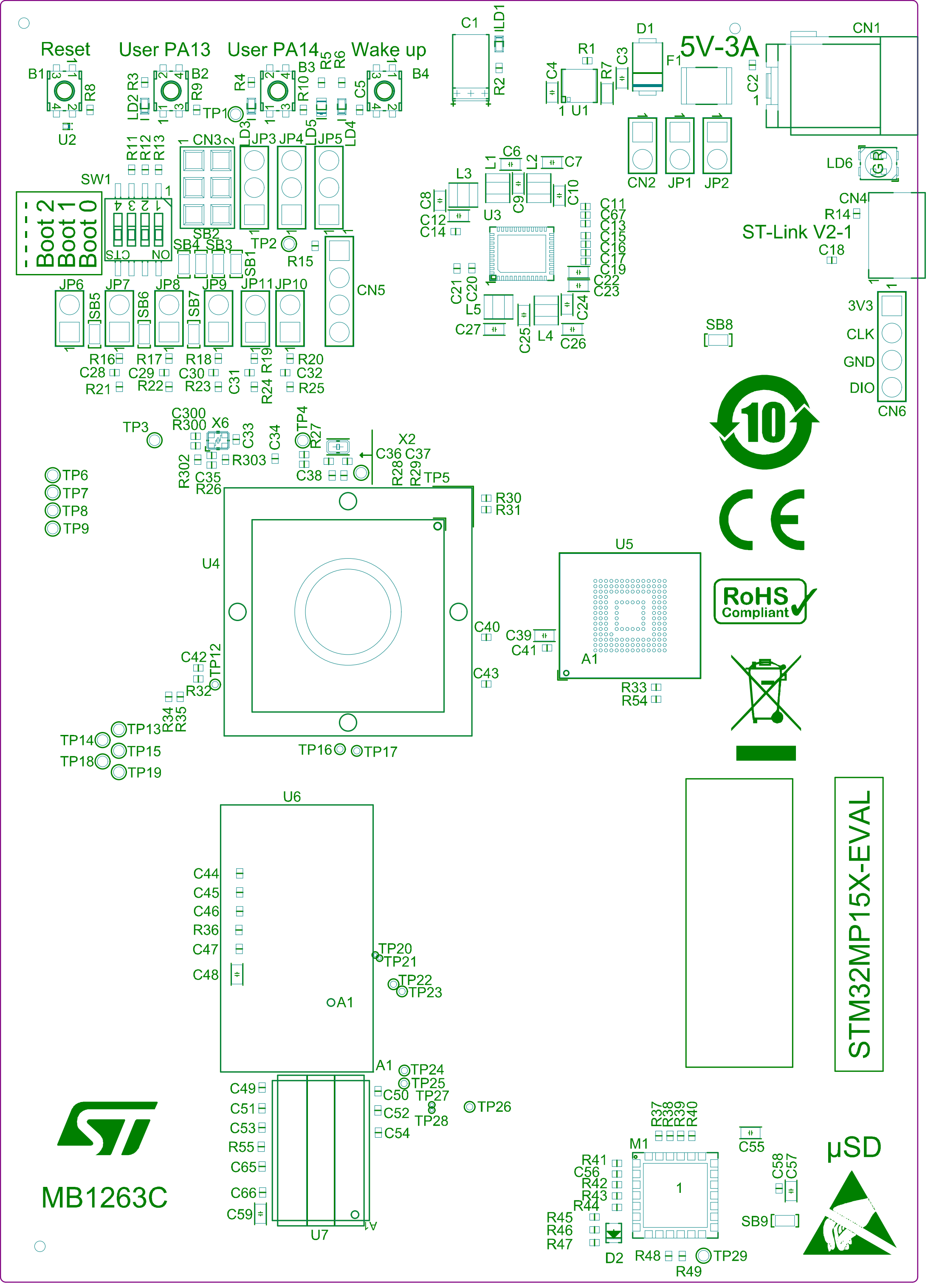


Top-Overlay

.GTO

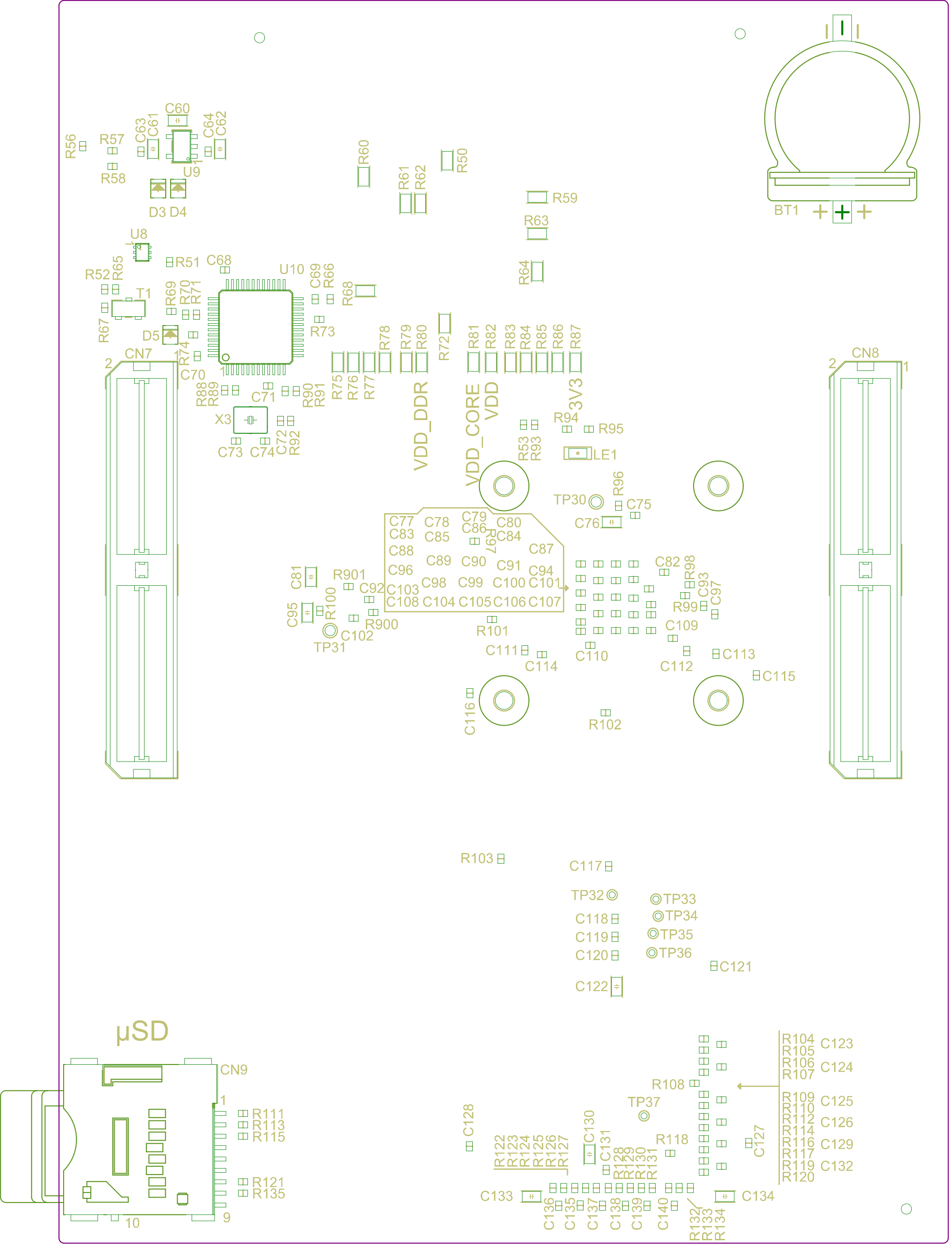


M15-Bottom Assembly .GM15

Bottom Overlay