STM32L496G-DISCO

MB1261

Table of contents

Sheet 1: Project overview (this page)

Sheet 2: Top

Sheet 3: Power

Sheet 4: Arduino Uno connector

Sheet 5: ST-LINK/V2-1

Sheet 6: QSPI Flash

Sheet 7: Peripherals

Sheet 8: USB_OTG_FS

Sheet 9: LCD Interface

Sheet 10: IDD measurement / MFX (Multi Function eXpander)

Sheet 11: MCU

Sheet 12: PSRAM

Sheet 13: Camera

Sheet 14: STMOD+ Interface

Sheet 15: Audio&DFSDM

Legend

General comment such as function title, configuration, ...

Text to be added to silkscreen.

Warning text.

Notes to generate the board layout.

Open Platform License Agreement

The Open Platform License Agreement (“Agreement”) is a binding legal contract between you ("You") and STMicroelectronics International N.V. (“ST”), a company incorporated under the laws of the Netherlands acting for the purpose of this Agreement through its Swiss branch 39, Chemin du Champ des Filles, 1228 Plan-les-Ouates, Geneva, Switzerland.

By using the enclosed reference designs, schematics, PC board layouts, and documentation, in hardcopy or CAD tool file format (collectively, the “Reference Material”), You are agreeing to be bound by the terms and conditions of this Agreement. Do not use the Reference Material until You have read and agreed to this Agreement terms and conditions. The use of the Reference Material automatically implies the acceptance of the Agreement terms and conditions.

The complete Open Platform License Agreement can be found on www.st.com/opla.

U_Top
Top.SchDoc

Title: **Project overview**		
Project: **STM32L496G-DISCO**		
Variant: [No Variations]		
Revision: B-01		Reference: MB1261
Size: A4	Date: 24/05/2017	Sheet: 1 of 15

life.augmented

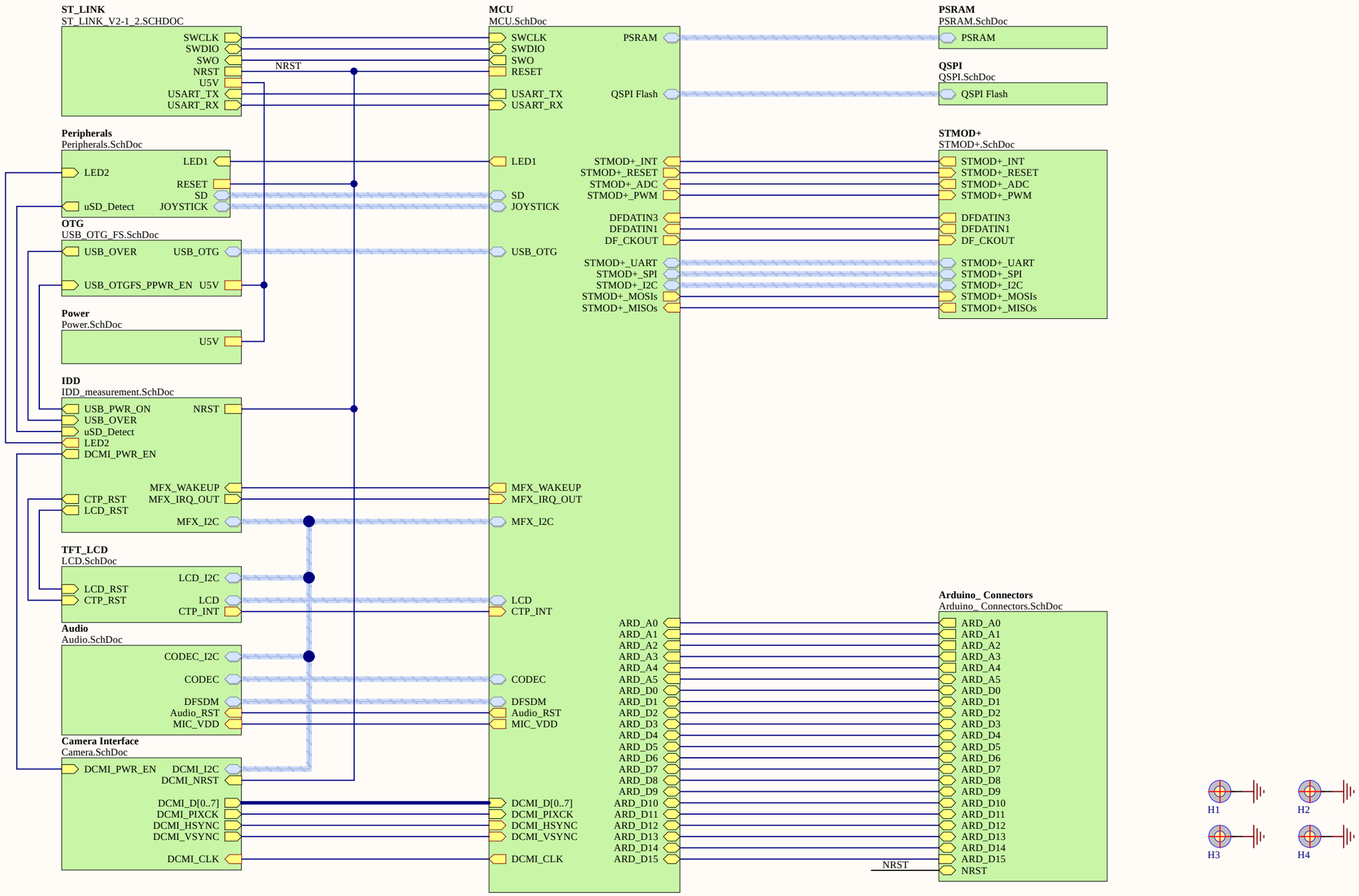

Title: **TOP**		
Project: **STM32L496G-DISCO**		
Variant: [No Variations]		
Revision: B-01		Reference: MB1261
Size: A3	Date: 24/05/2017	Sheet: 2 of 15

life.augmented

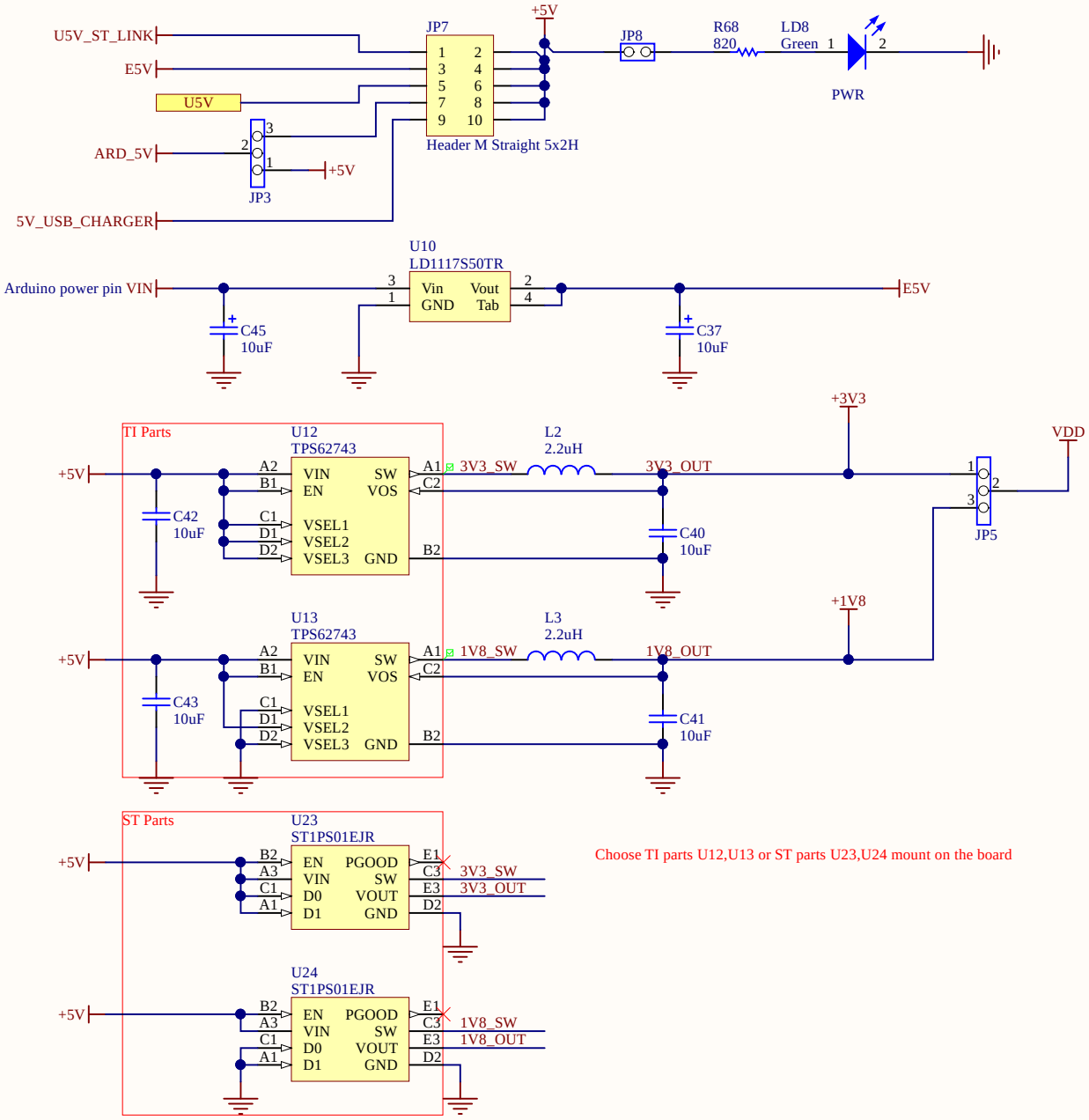

Title: **Power**		
Project: **STM32L496G-DISCO**		
Variant: [No Variations]		
Revision: B-01		Reference: MB1261
Size: A4	Date: 24/05/2017	Sheet: 3 of 15

life.augmented

Arduino uno connector

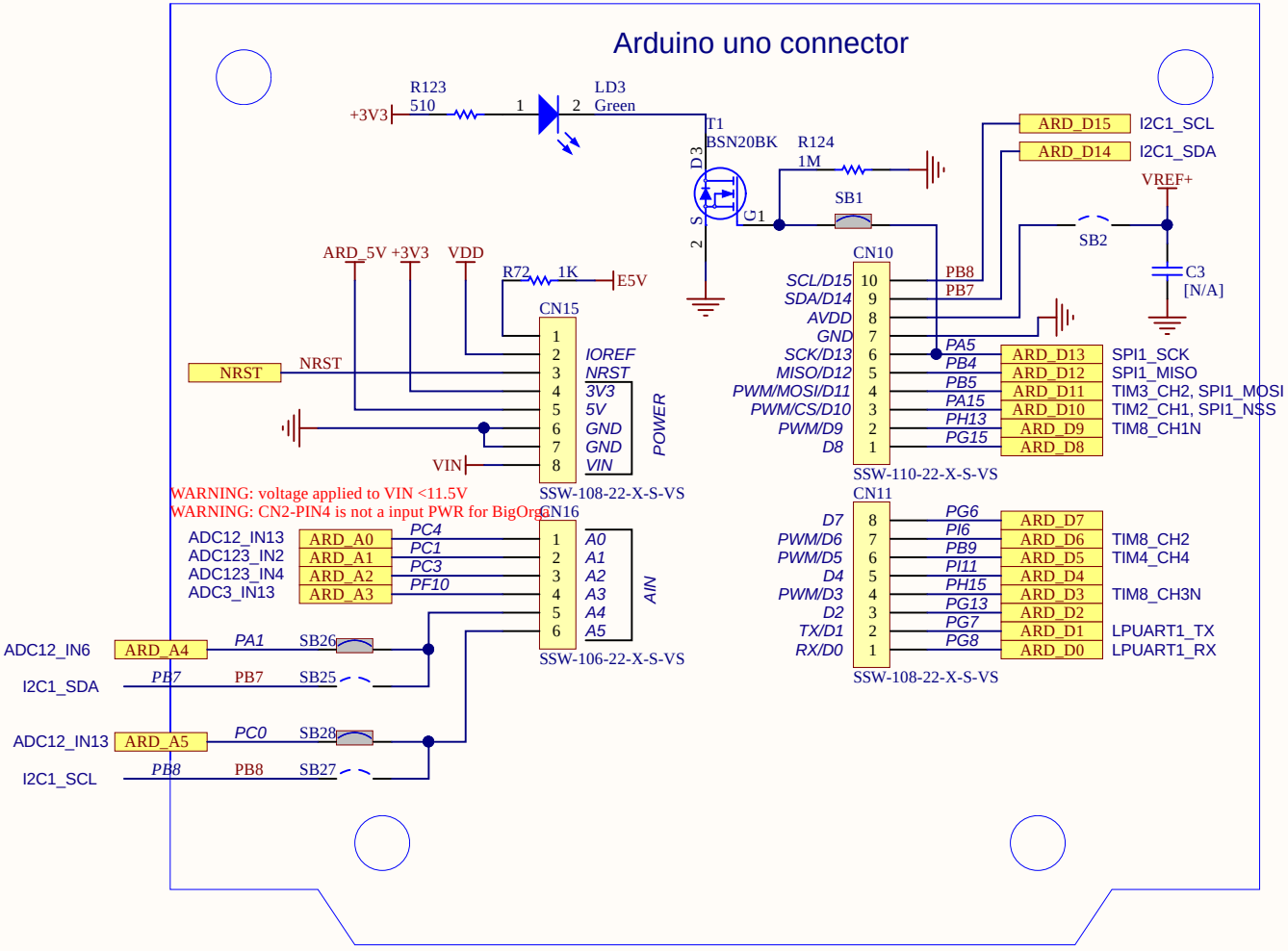

Title: **Arduino Uno connector**		
Project: **STM32L496G-DISCO**		
Variant: [No Variations]		
Revision: B-01		Reference: MB1261
Size: A4	Date: 24/05/2017	Sheet: 4 of 15

life.augmented

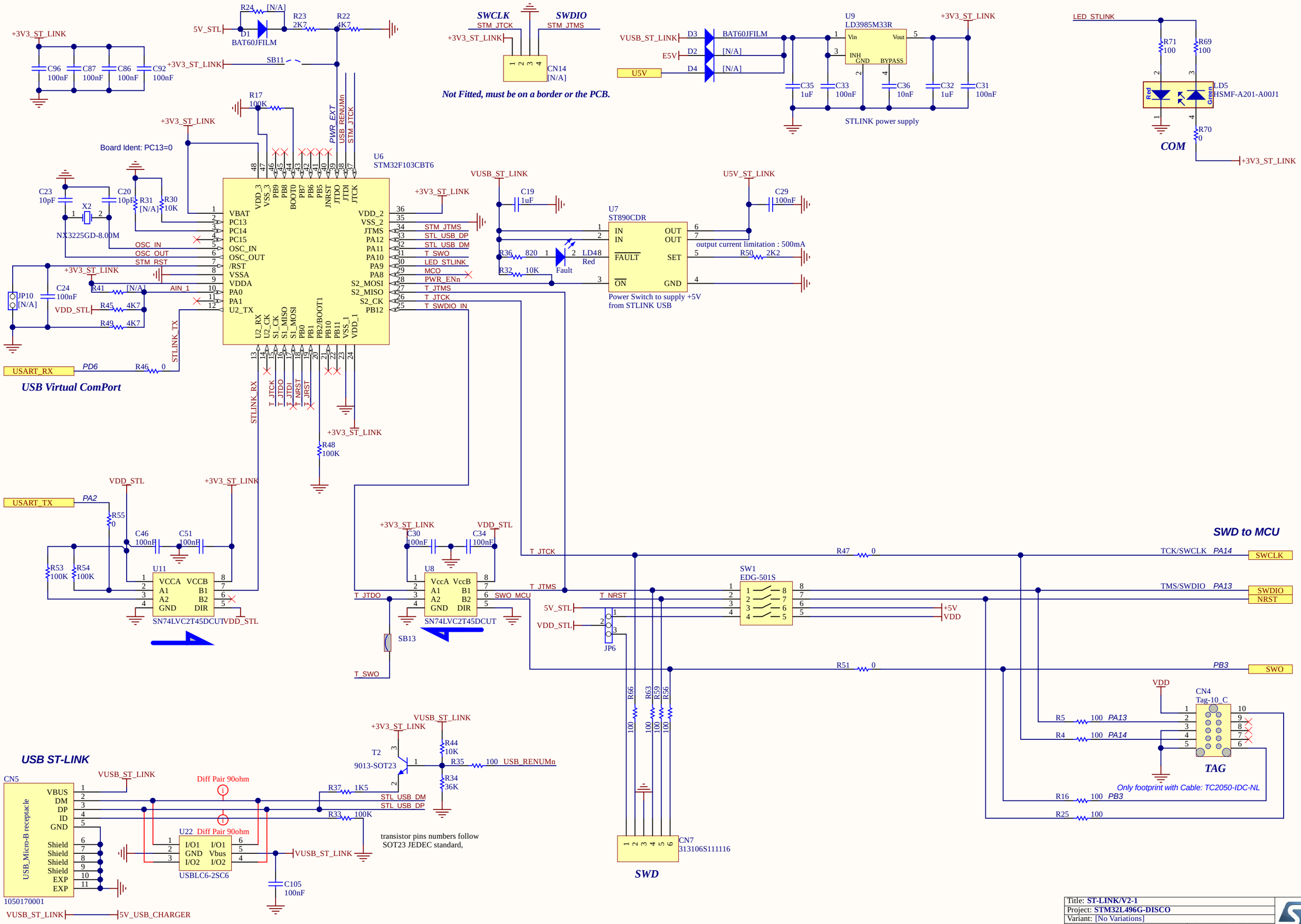

Title: **ST-LINK/V2-1**	
Project: **STM32L496G-DISCO**	
Variant: [No Variations]	
Revision: B-01	Reference: MB1261
Size: A3 Date: 24/05/2017	Sheet: 5 of 15

life.augmented

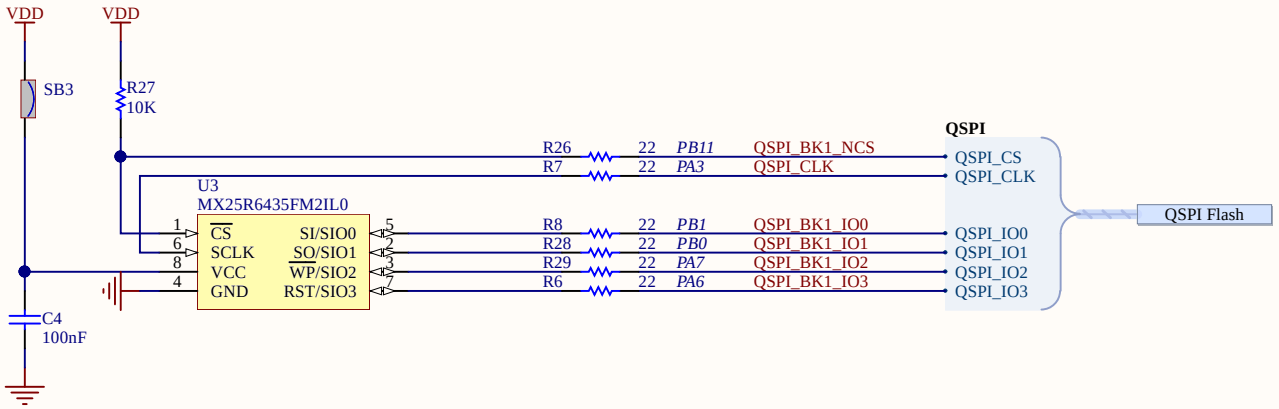

Title: **QSPI Flash**		
Project: **STM32L496G-DISCO**		
Variant: [No Variations]		
Revision: B-01		Reference: MB1261
Size: A4	Date: 24/05/2017	Sheet: 6 of 15

life.augmented

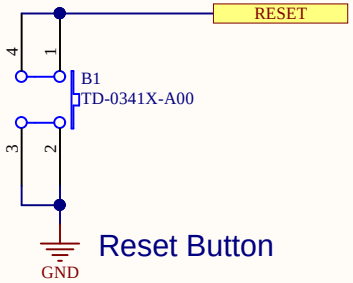

Reset Button

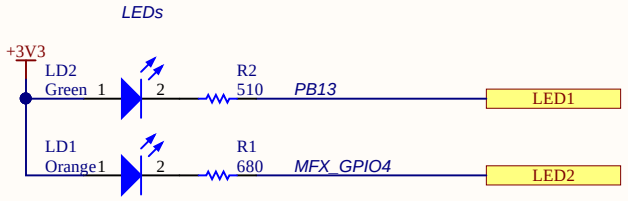

The 2 LEDs are top side

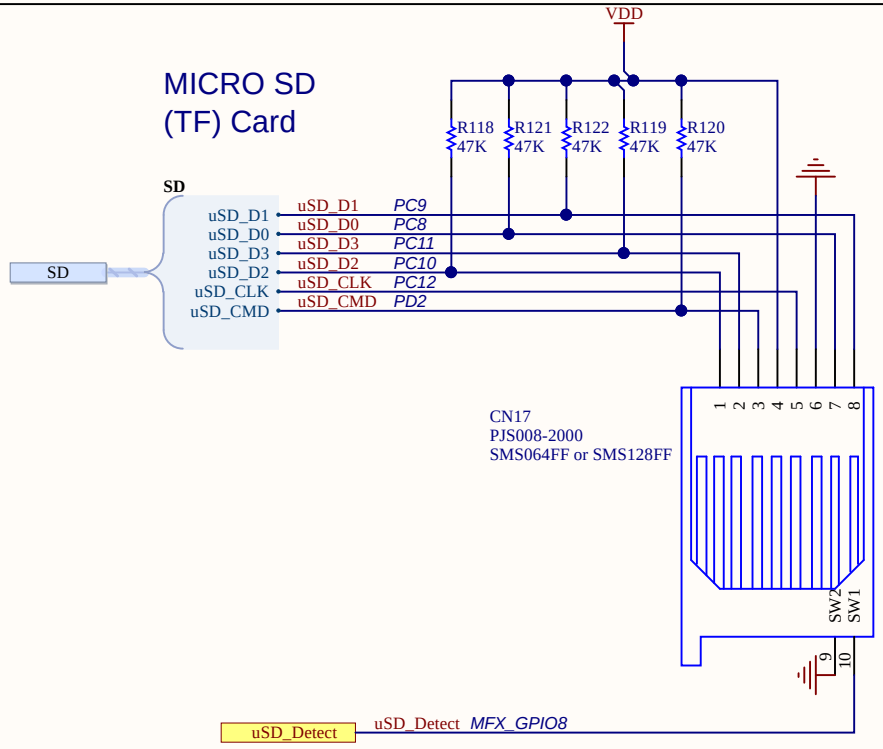

MICRO SD
(TF) Card

SD can only works under 3V3

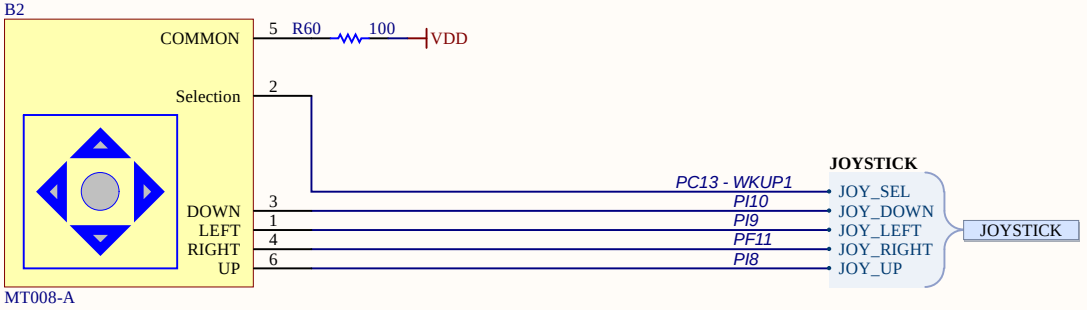

JOYSTICK

Title: **Peripherals**		
Project: **STM32L496G-DISCO**		
Variant: [No Variations]		
Revision: B-01		Reference: MB1261
Size: A4	Date: 24/05/2017	Sheet: 7 of 15

life.augmented

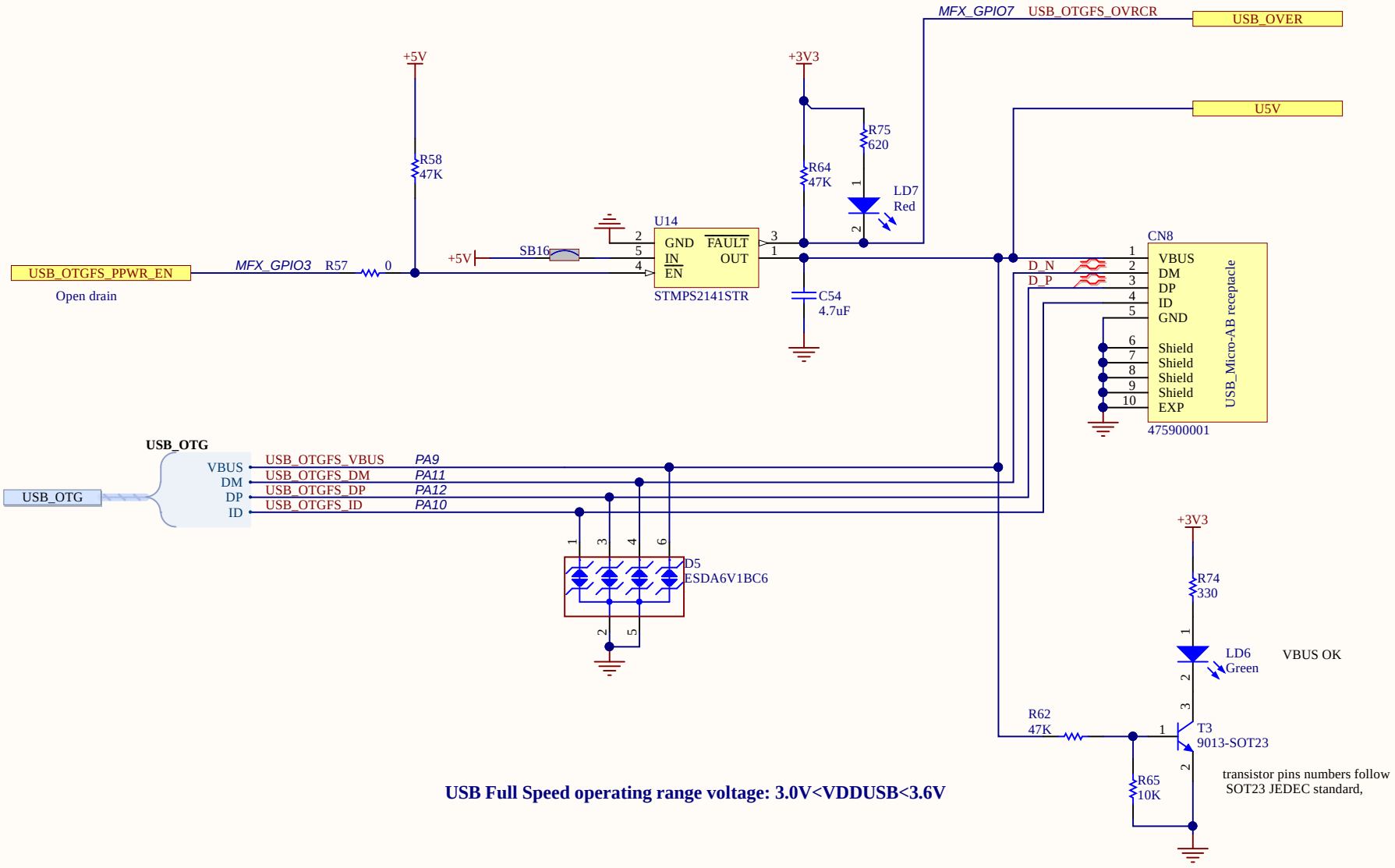

USB Full Speed operating range voltage: 3.0V<VDDUSB<3.6V

Title: **USB_OTG_FS**		
Project: **STM32L496G-DISCO**		
Variant: [No Variations]		
Revision: B-01		Reference: MB1261
Size: A4	Date: 24/05/2017	Sheet: 8 of 15

life.augmented

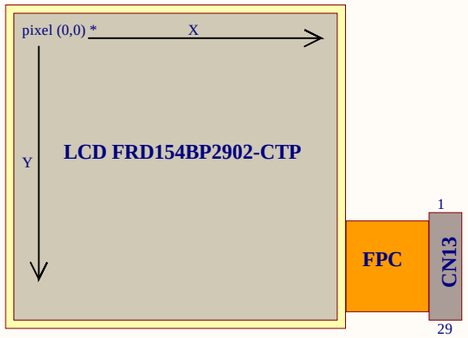

*: standard orientation. Rotations by 90, 180, 270 degrees possible by registers.

240x240 pixels TFT LCD

ZZ1

FRIDA FRD154BP2902-CTP

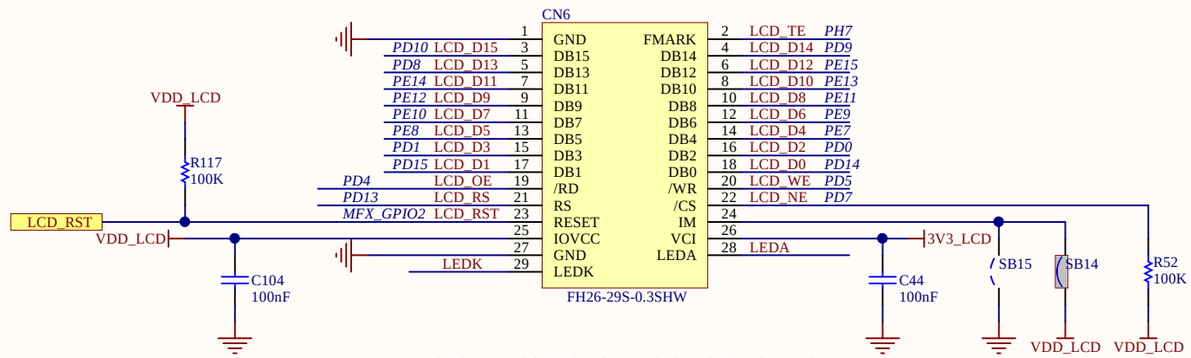

SB28 open and SB27 closed = IM high: LCD in 16bits mode
SB28 closed and SB27 opened = IMlow : LCD in 8bits mode

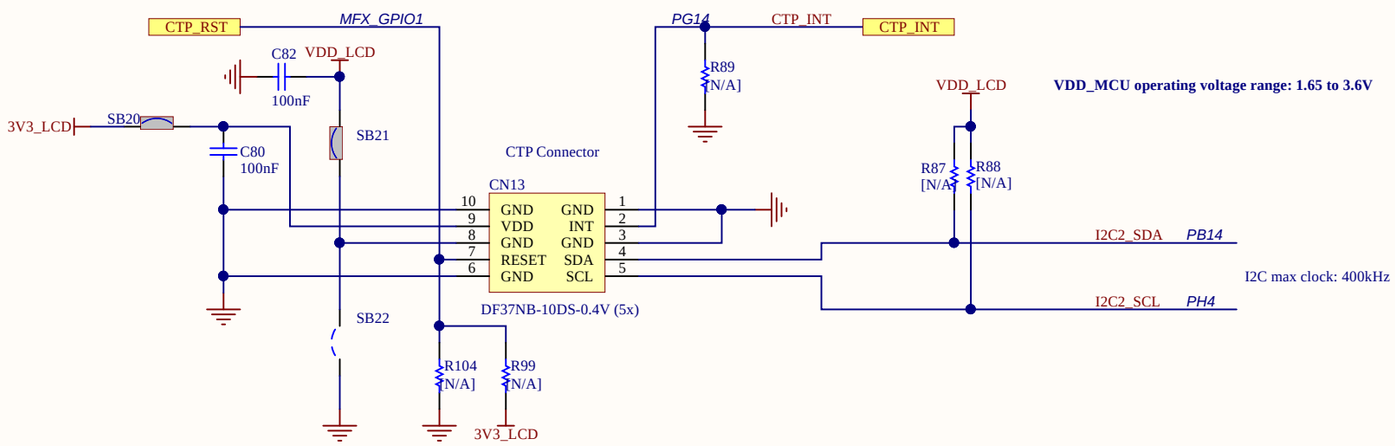

VDD_MCU operating voltage range: 1.65 to 3.6V

I2C max clock: 400kHz

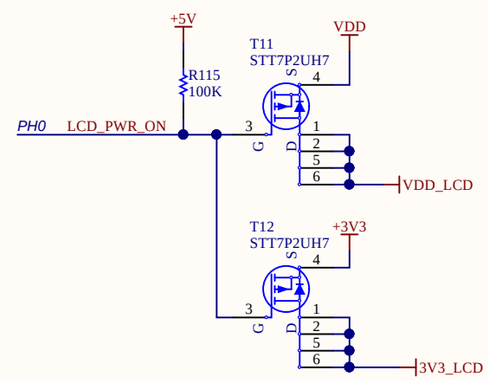

Layout: parts close to STLD40D and grouped in same area with BLGND as local ground plane

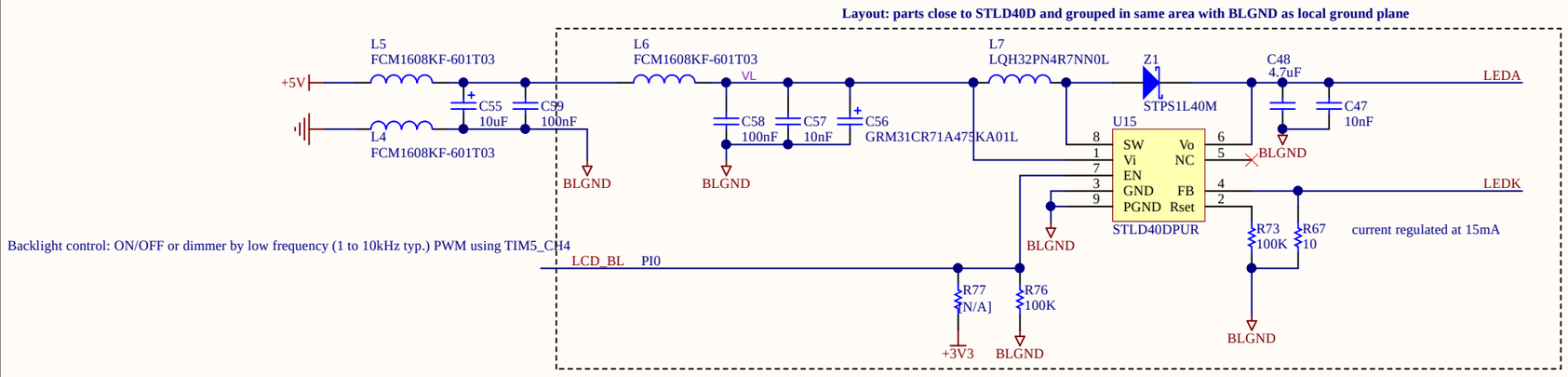

Backlight driver & PFC connector for LCD panel

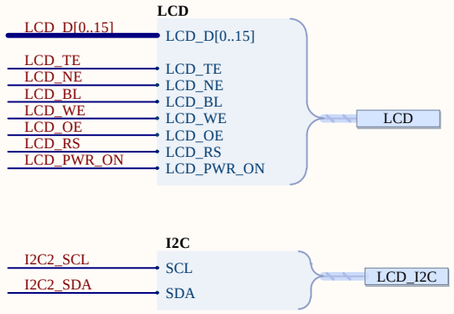

Title: **LCD Interface**		
Project: **STM32L496G-DISCO**		
Variant: [No Variations]		
Revision: B-01		Reference: MB1261
Size: A3	Date: 24/05/2017	Sheet: 9 of 15

life.augmented

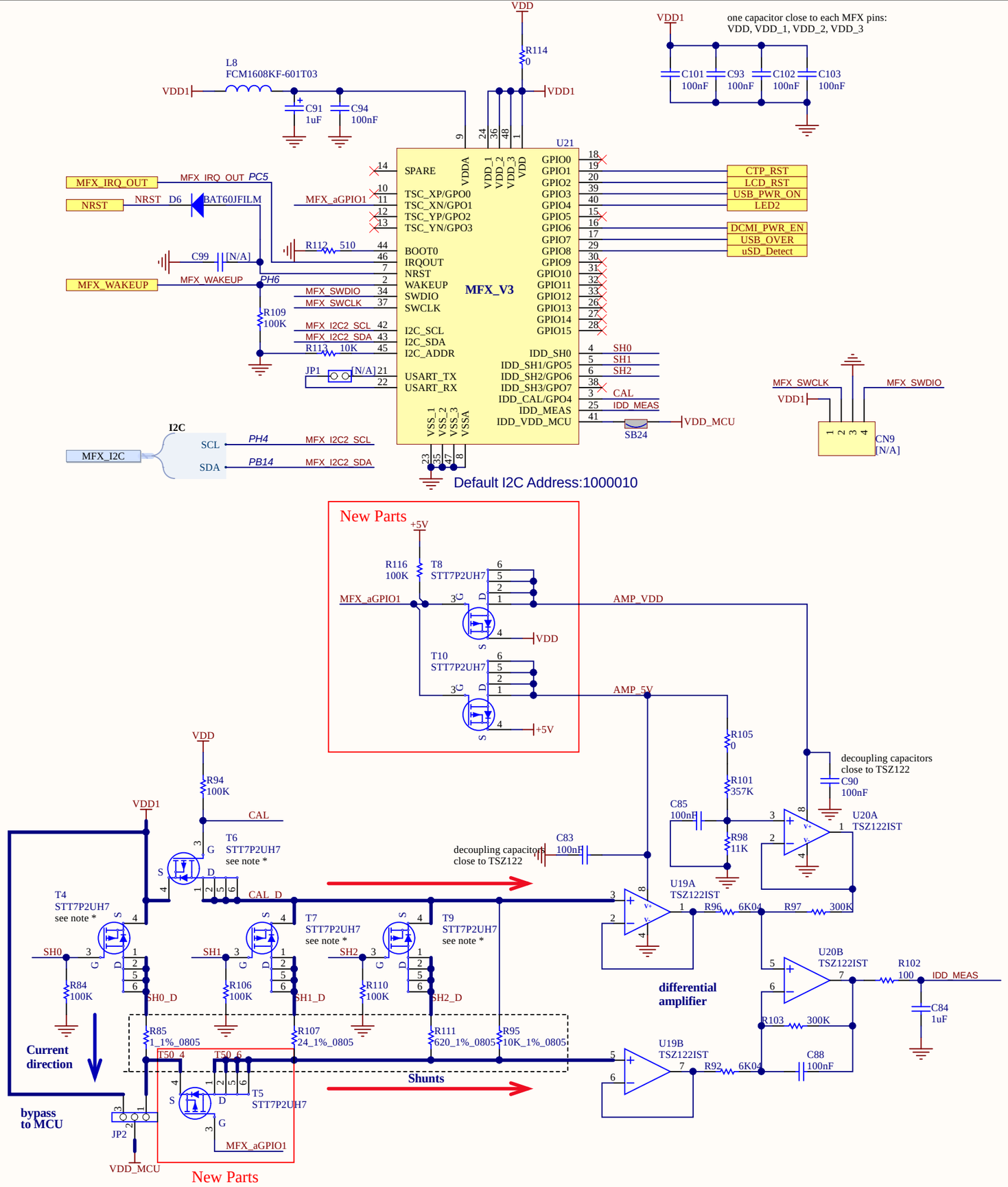

Title: **IDD measurement / MFX (Multi Function eXpander)**		
Project: **STM32L496G-DISCO**		
Variant: [No Variations]		
Revision: B-01		Reference: MB1261
Size: A3	Date: 24/05/2017	Sheet: 10 of 15

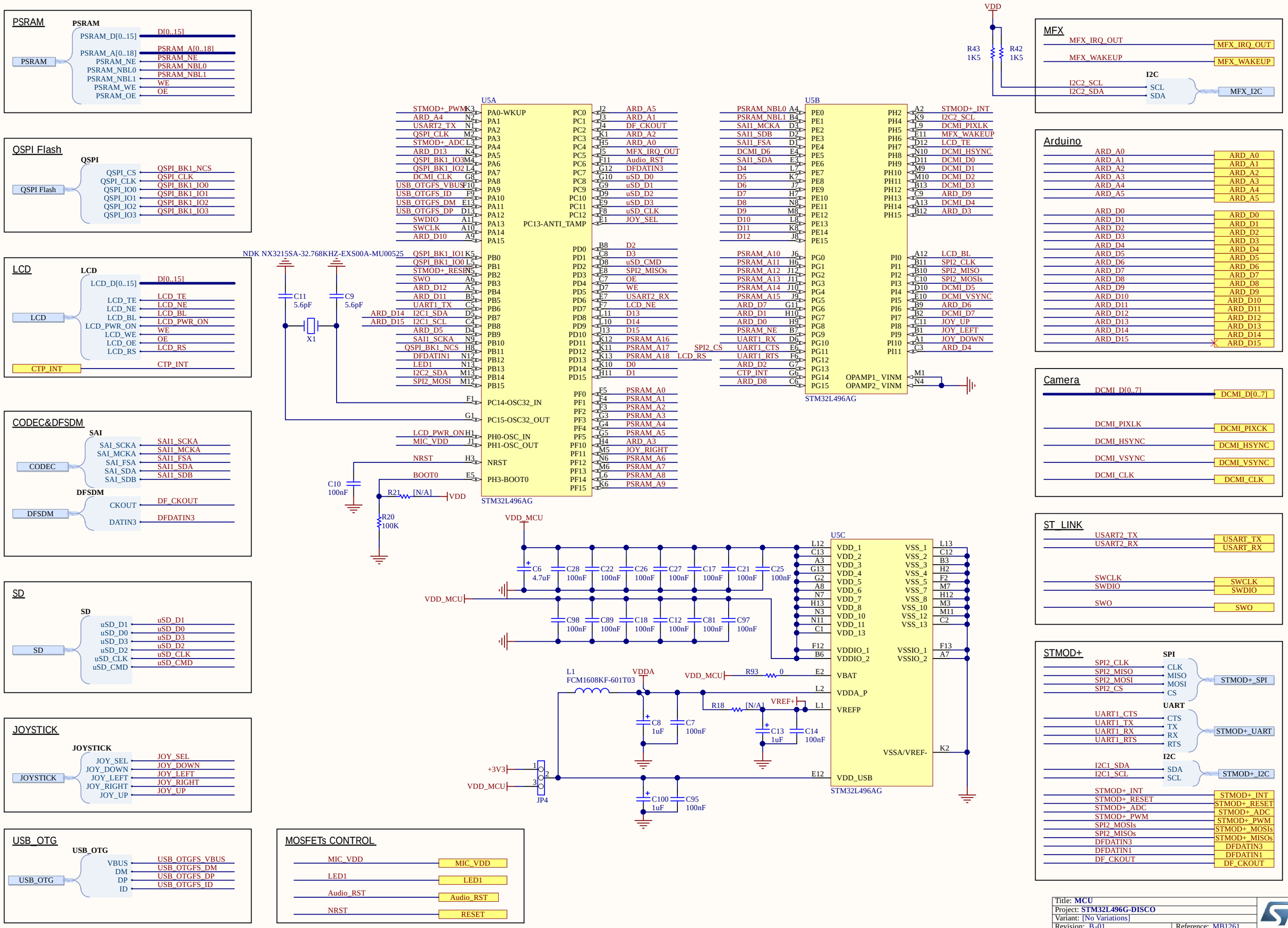

Title: MCU	
Project: STM32L496G-DISCO	
Variant: [No Variations]	
Revision: B-01	Reference: MB1261
Size: A3 Date: 24/05/2017	Sheet: 11 of 15

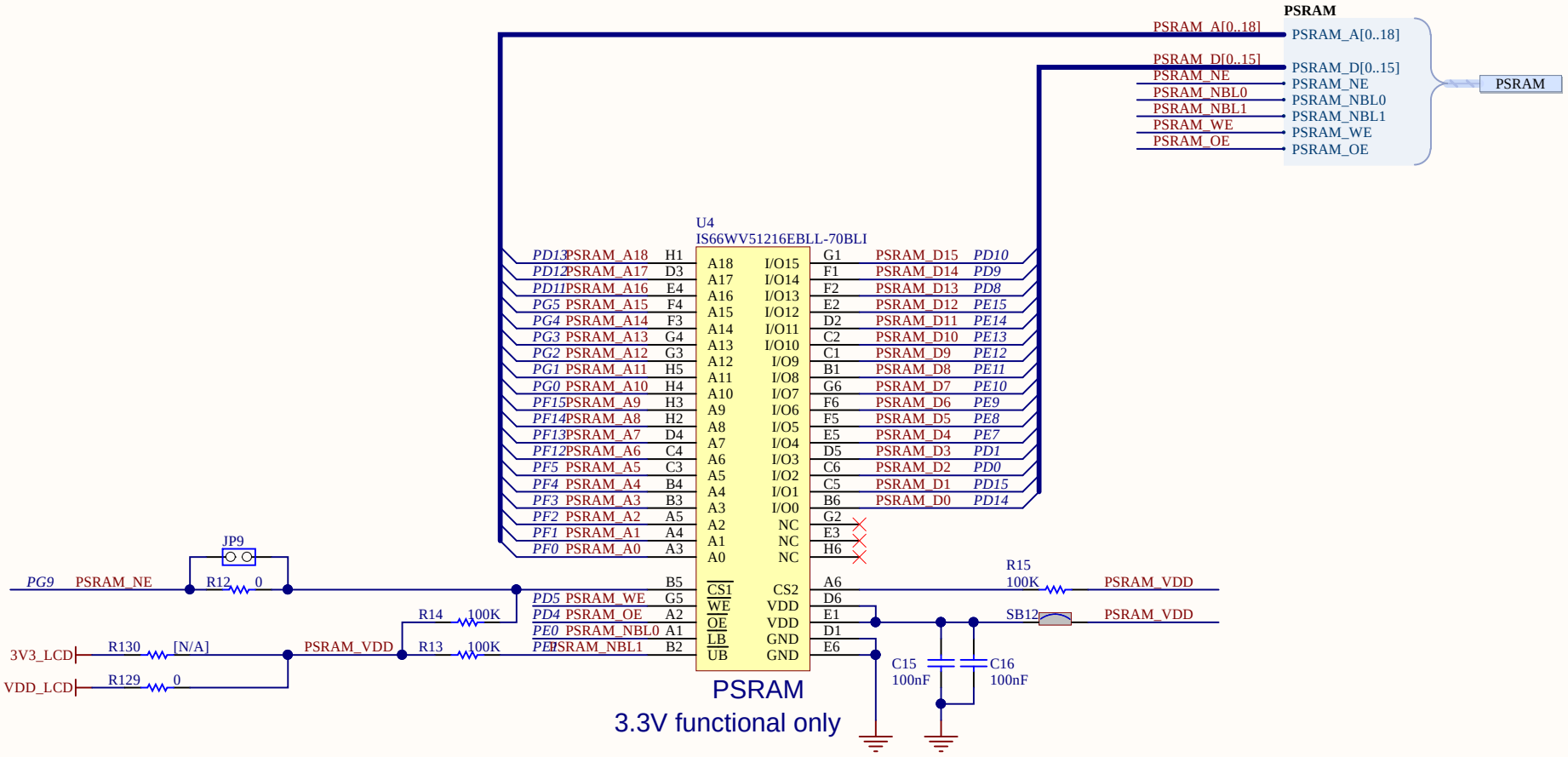

Title: **PSRAM**		
Project: **STM32L496G-DISCO**		
Variant: [No Variations]		
Revision: B-01		Reference: MB1261
Size: A4	Date: 24/05/2017	Sheet: 12 of 15

life.augmented

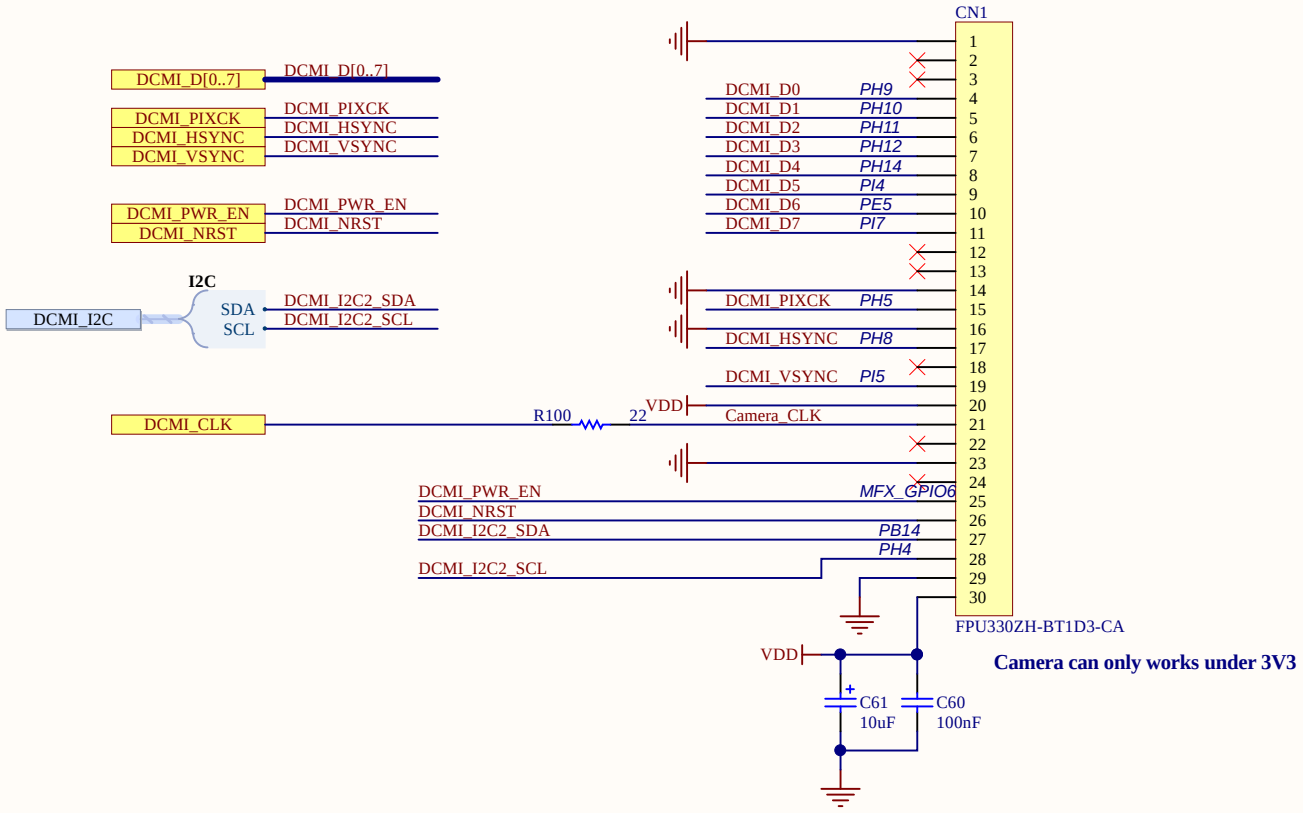

Title: **Camera**		
Project: **STM32L496G-DISCO**		
Variant: [No Variations]		
Revision: B-01		Reference: MB1261
Size: A4	Date: 24/05/2017	Sheet: 13 of 15

life.augmented

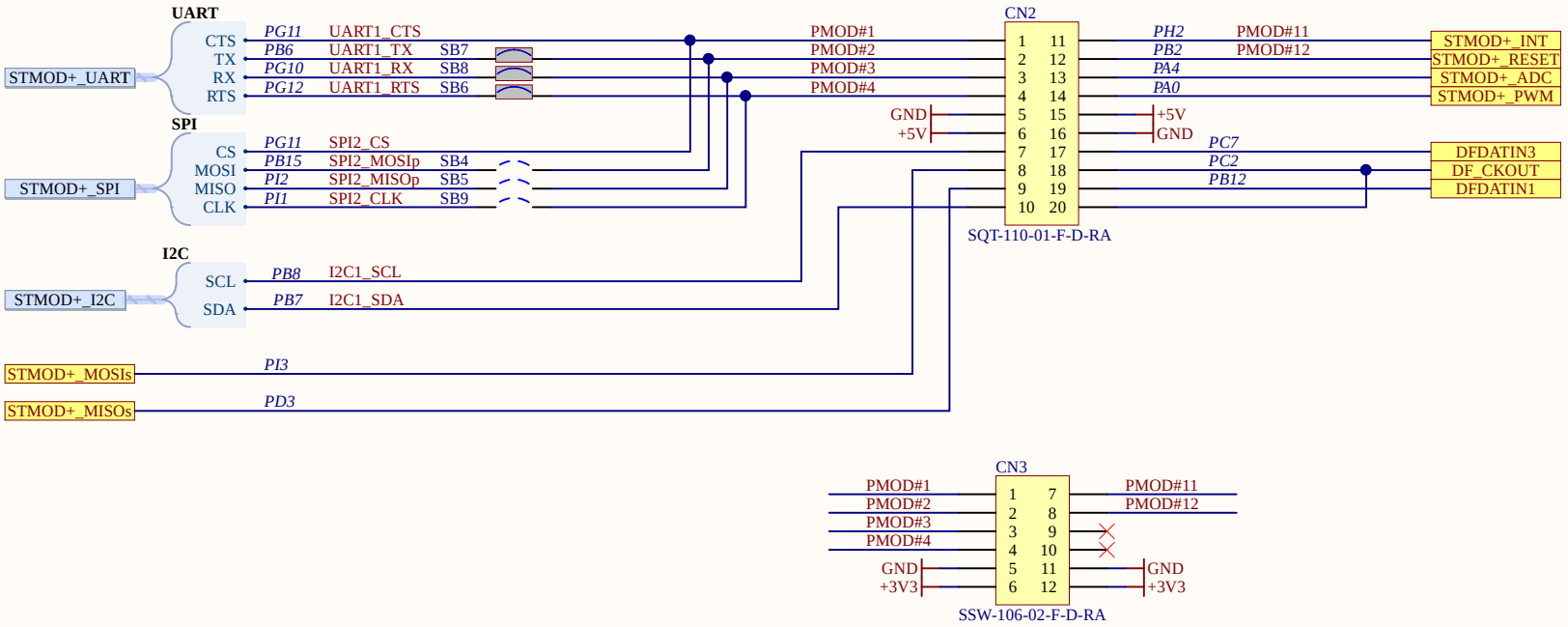

Title: **STMOD+ Interface**		
Project: **STM32L496G-DISCO**		
Variant: [No Variations]		
Revision: B-01		Reference: MB1261
Size: A4	Date: 24/05/2017	Sheet: 14 of 15

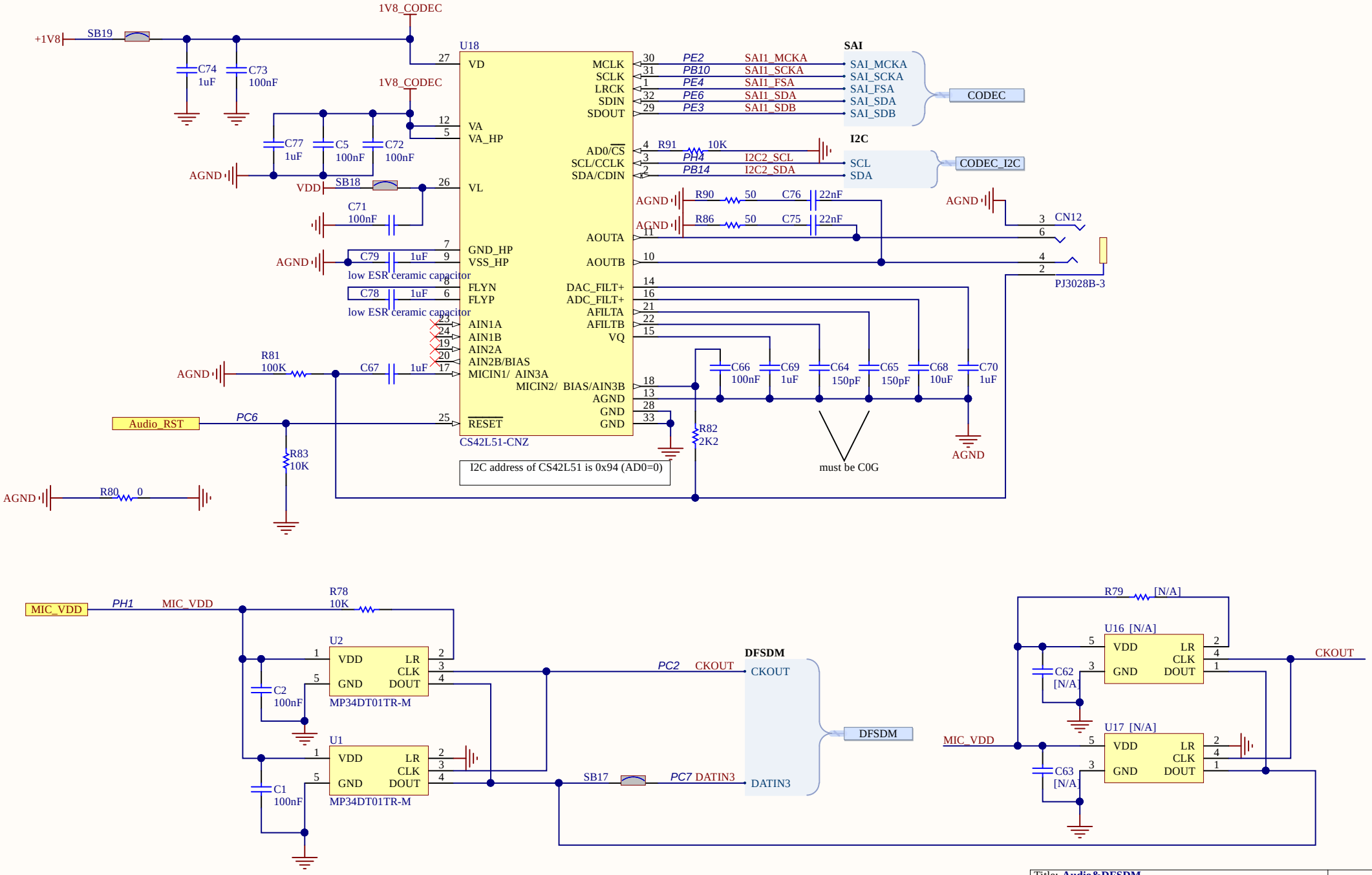

Title: **Audio&DFSDM**		
Project: **STM32L496G-DISCO**		
Variant: [No Variations]		
Revision: B-01		Reference: MB1261
Size: A4	Date: 24/05/2017	Sheet: 15 of 15

life.augmented