# STB40N60M2, STP40N60M2, STW40N60M2

Datasheet

## N-channel 600 V, 78 mΩ typ., 34 A MDmesh M2 Power MOSFET in a D²PAK, TO-220 and TO-247 packages

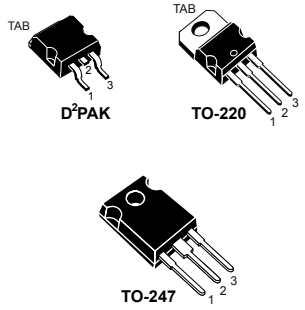


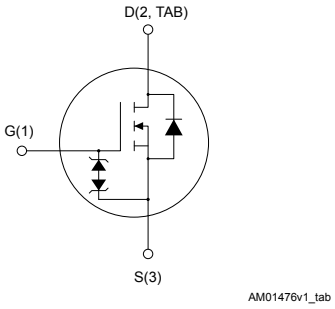


## Features

| Order code | $V_{DS}$ | $R_{DS(on)}$ max. | $I_D$ |
|---|---|---|---|
| STB40N60M2 | 600 V | 88 mΩ | 34 A |
| STP40N60M2 | | | |
| STW40N60M2 | | | |

- Extremely low gate charge
- Excellent output capacitance ($C_{oss}$) profile
- 100% avalanche tested
- Zener-protected

## Applications

- Switching applications

## Description

These devices are N-channel Power MOSFETs developed using the MDmesh M2 technology. Thanks to their strip layout and improved vertical structure, these devices exhibit low on-resistance and optimized switching characteristics, rendering them suitable for the most demanding high-efficiency converters.

| Product status links |
|---|
| STB40N60M2 |
| STP40N60M2 |
| STW40N60M2 |

# 1 Electrical ratings

**Table 1. Absolute maximum ratings**

| Symbol | Parameter | Value | Unit |
|---|---|---|---|
| $V_{DS}$ | Drain-source voltage | 600 | V |
| $V_{GS}$ | Gate-source voltage | ±25 | V |
| $I_D$ | Drain current (continuous) at $T_C$ = 25 °C | 34 | A |
| $I_D$ | Drain current (continuous) at $T_C$ = 100 °C | 22 | A |
| $I_{DM}$(1) | Drain current (pulsed) | 136 | A |
| $P_{TOT}$ | Total power dissipation at $T_C$ = 25 °C | 250 | W |
| dv/dt(2) | Peak diode recovery voltage slope | 15 | V/ns |
| dv/dt(3) | MOSFET dv/dt ruggedness | 50 | V/ns |
| $T_{stg}$ | Storage temperature range | -55 to 150 | °C |
| $T_J$ | Operating junction temperature range | | °C |

1. *Pulse width limited by safe operating area.*
2. *$I_{SD}$ ≤ 34 A, di/dt ≤ 400 A/µs, $V_{DS}$ (peak) < $V_{(BR)DSS}$, $V_{DD}$ = 400 V.*
3. *$V_{DD}$ = 480 V.*

**Table 2. Thermal data**

| Symbol | Parameter | Value | | | Unit |
|---|---|---|---|---|---|
| | | $D^2PAK$ | TO-220 | TO-247 | |
| $R_{thJC}$ | Thermal resistance, junction-to-case | 0.50 | | | °C/W |
| $R_{thJA}$ | Thermal resistance, junction-to-ambient | 30(1) | 62.5 | 50 | °C/W |

1. *When mounted on a standard 1 inch$^2$ area of FR-4 PCB with 2-oz copper.*

**Table 3. Avalanche characteristics**

| Symbol | Parameter | Value | Unit |
|---|---|---|---|
| $I_{AR}$ | Avalanche current, repetitive or not-repetitive (pulse width limited by $T_J$ max.) | 6 | A |
| $E_{AS}$ | Single pulse avalanche energy (starting $T_J$ = 25 °C, $I_D$ = $I_{AR}$, $V_{DD}$ = 50 V) | 500 | mJ |

# 2 Electrical characteristics

($T_C$ = 25 °C unless otherwise specified)

**Table 4. On/off states**

| Symbol | Parameter | Test conditions | Min. | Typ. | Max. | Unit |
|---|---|---|---|---|---|---|
| $V_{(BR)DSS}$ | Drain-source breakdown voltage | $I_D$ = 1 mA, $V_{GS}$ = 0 V | 600 | - | - | V |
| $I_{DSS}$ | Zero gate voltage drain current | $V_{GS}$ = 0 V, $V_{DS}$ = 600 V | - | - | 1 | µA |
| | | $V_{GS}$ = 0 V, $V_{DS}$ = 600 V, $T_C$ = 125 °C(1) | - | - | 100 | µA |
| $I_{GSS}$ | Gate body leakage current | $V_{DS}$ = 0 V, $V_{GS}$ = ±25 V | - | - | ±10 | µA |
| $V_{GS(th)}$ | Gate threshold voltage | $V_{DS}$ = $V_{GS}$, $I_D$ = 250 µA | 2 | 3 | 4 | V |
| $R_{DS(on)}$ | Static drain-source on-resistance | $V_{GS}$ = 10 V, $I_D$ = 17 A | - | 78 | 88 | mΩ |

1. *Specified by design, not tested in production.*

**Table 5. Dynamic**

| Symbol | Parameter | Test conditions | Min. | Typ. | Max. | Unit |
|---|---|---|---|---|---|---|
| $C_{iss}$ | Input capacitance | $V_{DS}$ = 100 V, f = 1 MHz, $V_{GS}$ = 0 V | - | 2500 | - | pF |
| $C_{oss}$ | Output capacitance | | - | 117 | - | pF |
| $C_{rss}$ | Reverse transfer capacitance | | - | 2.4 | - | pF |
| $C_{oss\ eq.}$(1) | Equivalent capacitance time related | $V_{DS}$ = 0 to 480 V, $V_{GS}$ = 0 V | - | 342 | - | pF |
| $Q_g$ | Total gate charge | $V_{DD}$ = 480 V, $I_D$ = 34 A, $V_{GS}$ = 0 to 10 V (see the Figure 16. Test circuit for gate charge behavior) | - | 57 | - | nC |
| $Q_{gs}$ | Gate-source charge | | - | 10 | - | nC |
| $Q_{gd}$ | Gate-drain charge | | - | 25.5 | - | nC |
| $R_g$ | Intrinsic gate resistance | f = 1 MHz, $I_D$ = 0 A | - | 4.4 | - | Ω |

1. *$C_{oss\ eq.}$ is defined as a constant equivalent capacitance giving the same charging time as $C_{oss}$ when $V_{DS}$ increases from 0 to 80% $V_{DSS}$.*

**Table 6. Switching times**

| Symbol | Parameter | Test conditions | Min. | Typ. | Max. | Unit |
|---|---|---|---|---|---|---|
| $t_{d(on)}$ | Turn-on delay time | $V_{DD}$ = 300 V, $I_D$ = 34 A, $R_G$ = 4.7 Ω, $V_{GS}$ = 10 V (see the Figure 15. Test circuit for resistive load switching times and Figure 20. Switching time waveform) | - | 20.5 | - | ns |
| $t_r$ | Rise time | | - | 13.5 | - | ns |
| $t_{d(off)}$ | Turn-off delay time | | - | 96 | - | ns |
| $t_f$ | Fall time | | - | 11 | - | ns |

**Table 7. Source-drain diode**

| Symbol | Parameter | Test conditions | Min. | Typ. | Max. | Unit |
|---|---|---|---|---|---|---|
| $I_{SD}$ | Source-drain current | | - | - | 34 | A |
| $I_{SDM}$[1] | Source-drain current (pulsed) | | - | - | 136 | A |
| $V_{SD}$[2] | Forward on voltage | $I_{SD}$ = 34 A, $V_{GS}$ = 0 V | - | - | 1.6 | V |
| $t_{rr}$ | Reverse recovery time | $I_{SD}$ = 34 A, di/dt = 100 A/µs, $V_{DD}$ = 60 V (see the Figure 17. Test circuit for inductive load switching and diode recovery times) | - | 440 | - | ns |
| $Q_{rr}$ | Reverse recovery charge | | - | 8.2 | - | µC |
| $I_{RRM}$ | Reverse recovery current | | - | 37 | - | A |
| $t_{rr}$ | Reverse recovery time | $I_{SD}$ = 34 A, di/dt = 100 A/µs, $V_{DD}$ = 60 V, $T_J$ = 150 °C (see the Figure 17. Test circuit for inductive load switching and diode recovery times) | - | 568 | - | ns |
| $Q_{rr}$ | Reverse recovery charge | | - | 11.5 | - | µC |
| $I_{RRM}$ | Reverse recovery current | | - | 40.5 | - | A |

1. *Pulse width limited by safe operating area.*
2. *Pulsed: pulse duration = 300 µs, duty cycle 1.5%.*

## 2.1 Electrical characteristics (curves)

**Figure 1. Safe operating area for D²PAK and TO-220**

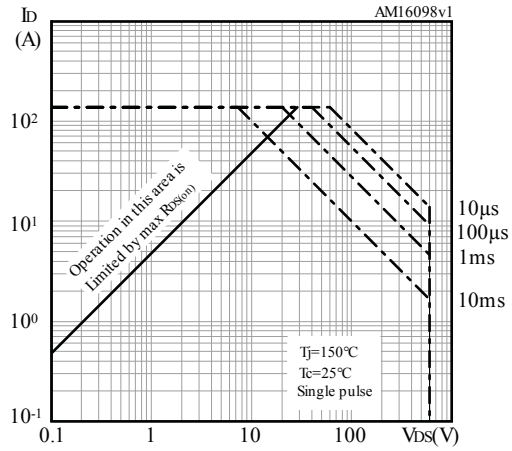


**Figure 2. Normalized transient thermal impedance for D²PAK and TO-220**

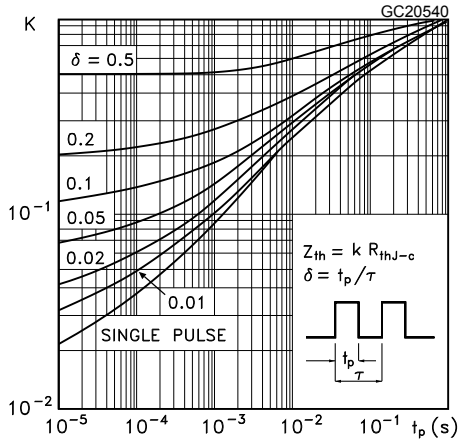


**Figure 3. Safe operating area for TO-247**

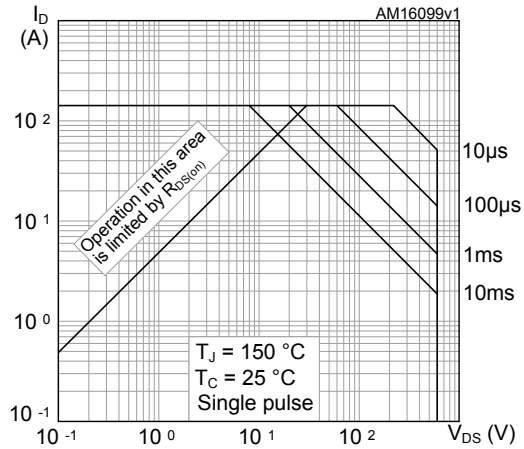


**Figure 4. Normalized transient thermal impedance for TO-247**

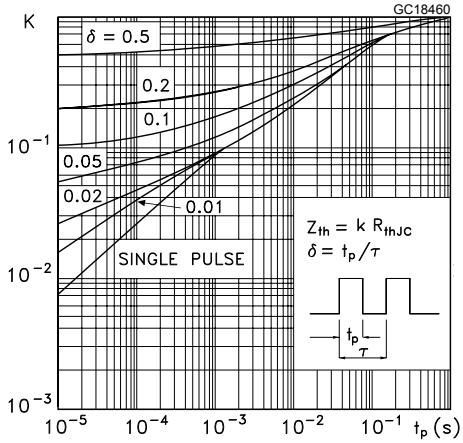


**Figure 5. Typical output characteristics**

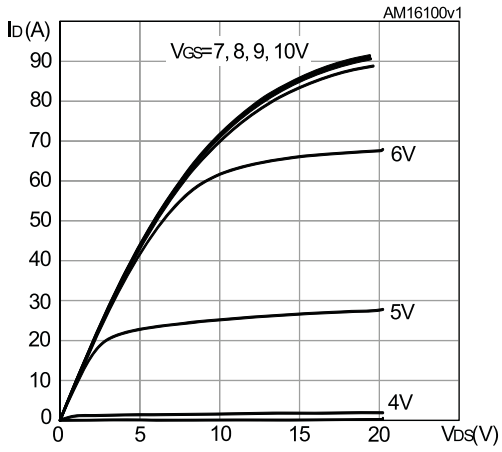


**Figure 6. Typical transfer characteristics**

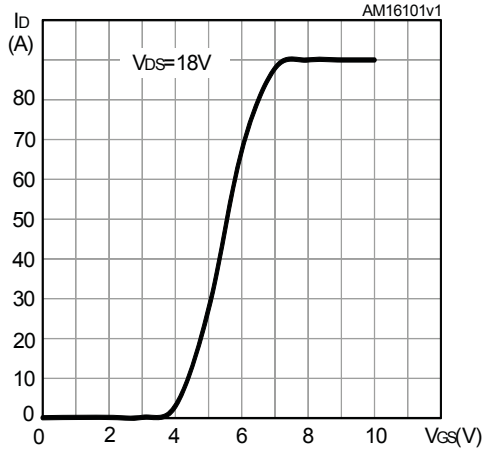

**Figure 7. Typical gate charge characteristics**

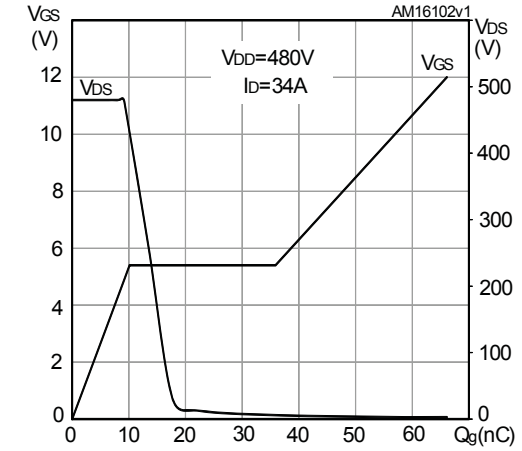


**Figure 8. Typical capacitance characteristics**

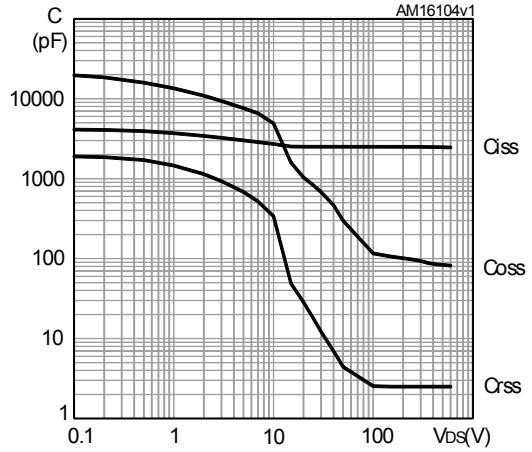


**Figure 9. Typical drain-source on-resistance**

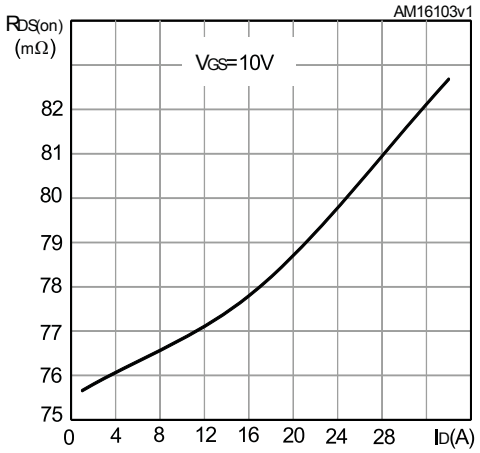


**Figure 10. Normalized breakdown voltage vs temperature**

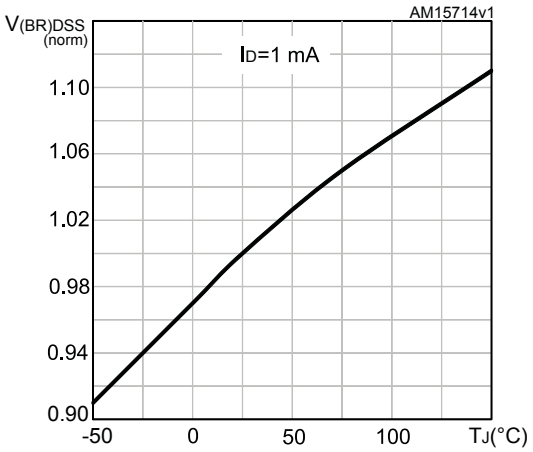


**Figure 11. Normalized gate threshold vs temperature**

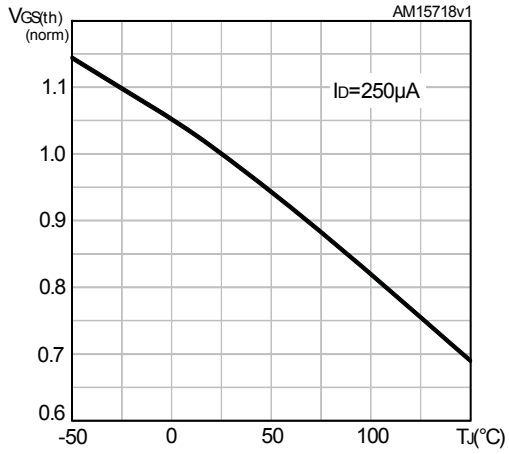


**Figure 12. Normalized on-resistance vs temperature**

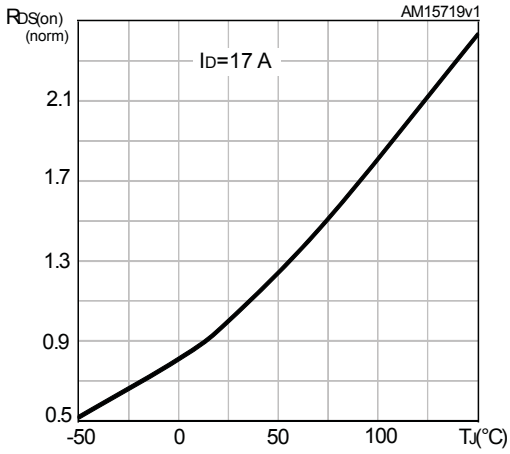

**Figure 13. Typical reverse diode forward characteristics**

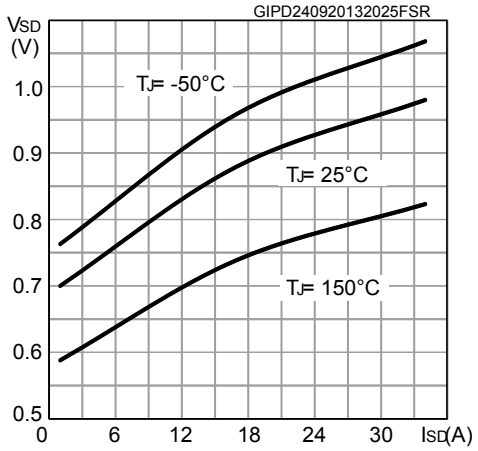


**Figure 14. Output capacitance stored energy**

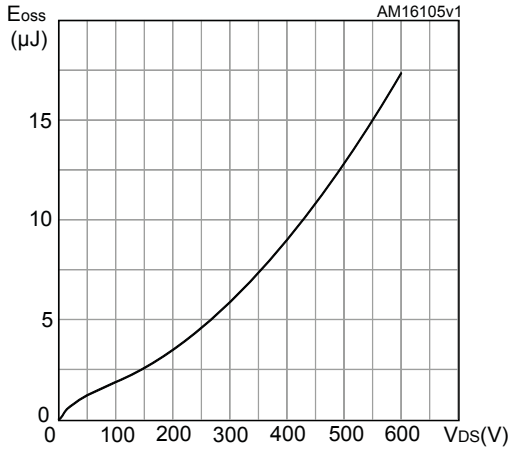

# 3 Test circuits

**Figure 15. Test circuit for resistive load switching times**

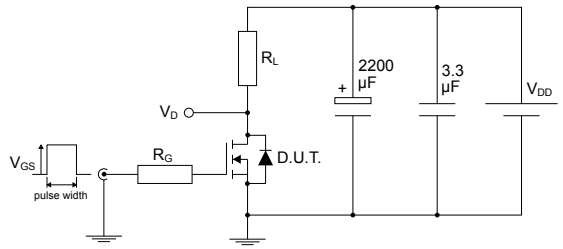


AM01468v1

**Figure 16. Test circuit for gate charge behavior**

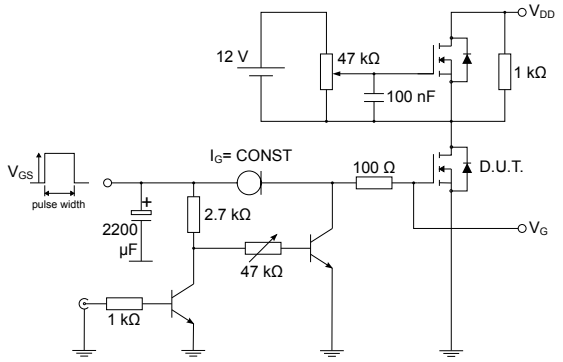


AM01469v1

**Figure 17. Test circuit for inductive load switching and diode recovery times**

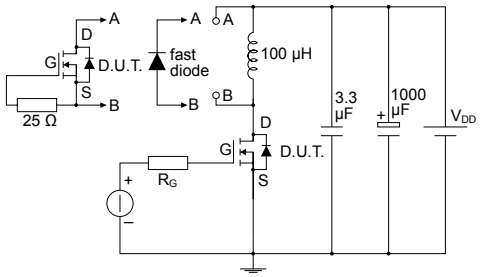


AM01470v1

**Figure 18. Unclamped inductive load test circuit**

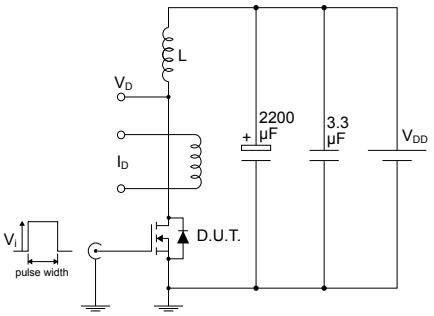


AM01471v1

**Figure 19. Unclamped inductive waveform**

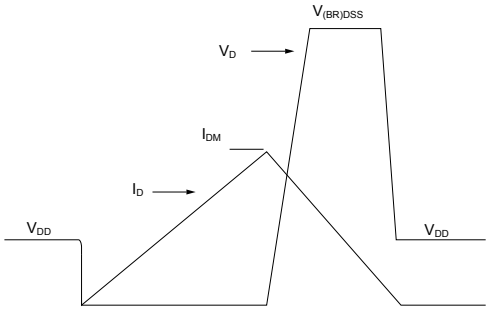


AM01472v1

**Figure 20. Switching time waveform**

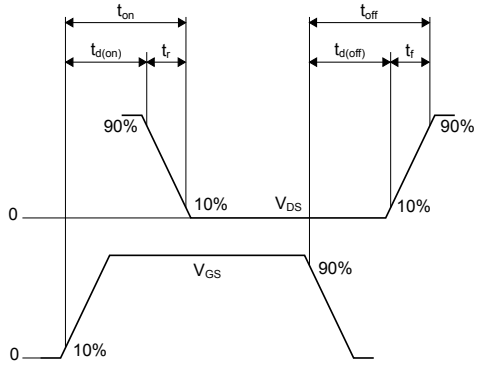


AM01473v1

# 4 Package information

To meet environmental requirements, ST offers these devices in different grades of ECOPACK packages, depending on their level of environmental compliance. ECOPACK specifications, grade definitions, and product status are available at: www.st.com. ECOPACK is an ST trademark.

## 4.1 D²PAK (TO-263) type A2 package information

**Figure 21. D²PAK (TO-263) type A2 package outline**

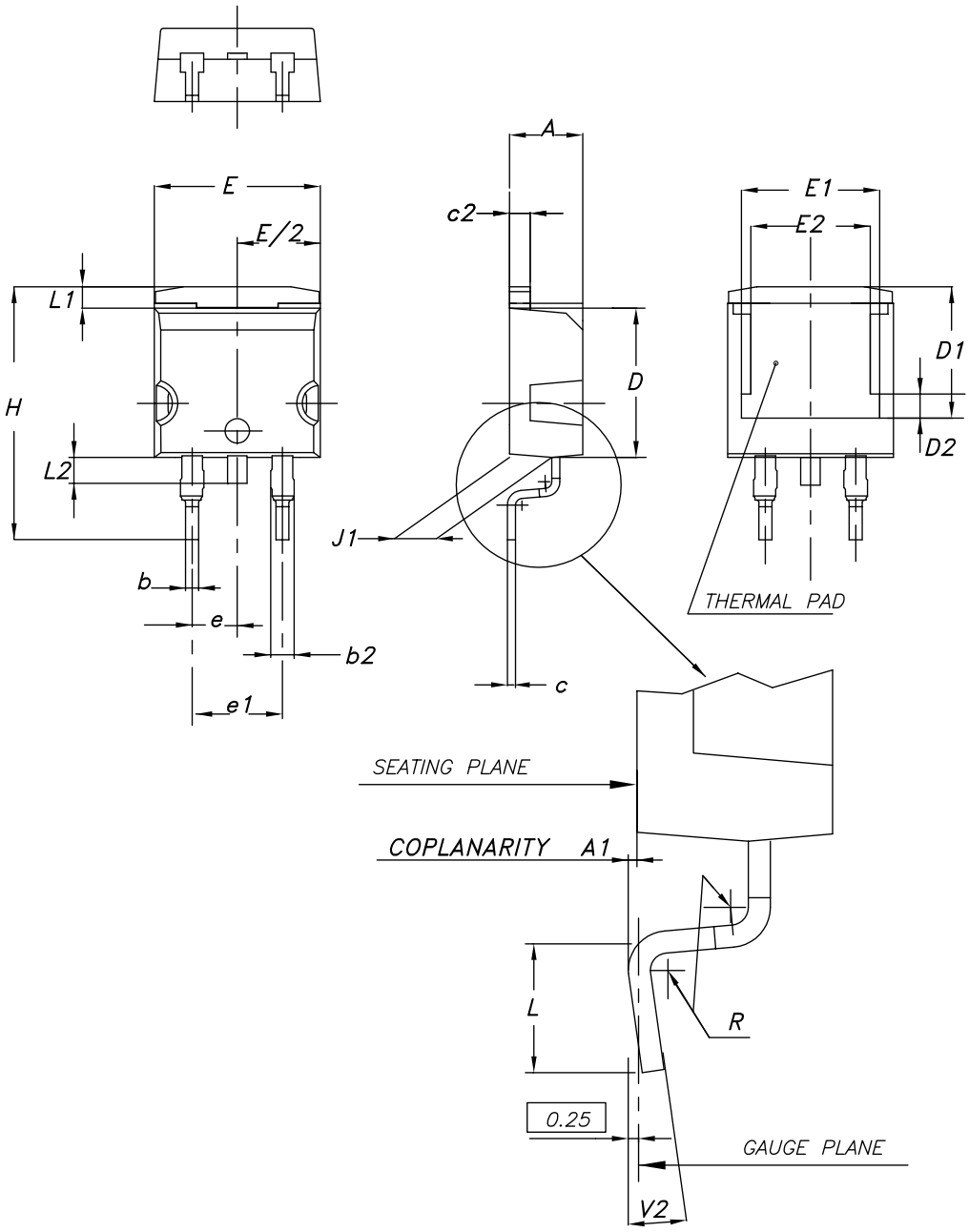


0079457_A2_27

Table 8. D²PAK (TO-263) type A2 package mechanical data

| Dim. | mm | | |
|---|---|---|---|
| | Min. | Typ. | Max. |
| A | 4.40 | | 4.60 |
| A1 | 0.03 | | 0.23 |
| b | 0.70 | | 0.93 |
| b2 | 1.14 | | 1.70 |
| c | 0.45 | | 0.60 |
| c2 | 1.23 | | 1.36 |
| D | 8.95 | | 9.35 |
| D1 | 7.50 | 7.75 | 8.00 |
| D2 | 1.10 | 1.30 | 1.50 |
| E | 10.00 | | 10.40 |
| E1 | 8.70 | 8.90 | 9.10 |
| E2 | 7.30 | 7.50 | 7.70 |
| e | | 2.54 | |
| e1 | 4.88 | | 5.28 |
| H | 15.00 | | 15.85 |
| J1 | 2.49 | | 2.69 |
| L | 2.29 | | 2.79 |
| L1 | 1.27 | | 1.40 |
| L2 | 1.30 | | 1.75 |
| R | | 0.40 | |
| V2 | 0° | | 8° |

Figure 22. D²PAK (TO-263) recommended footprint (dimensions are in mm)

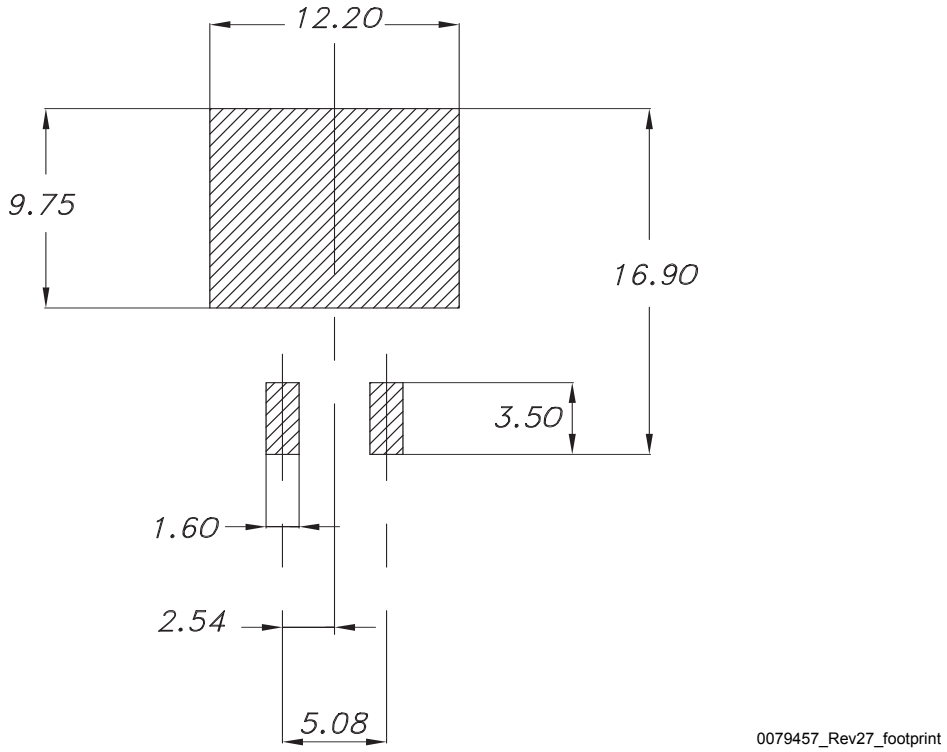

## 4.2 TO-220 type A package information

Figure 23. TO-220 type A package outline

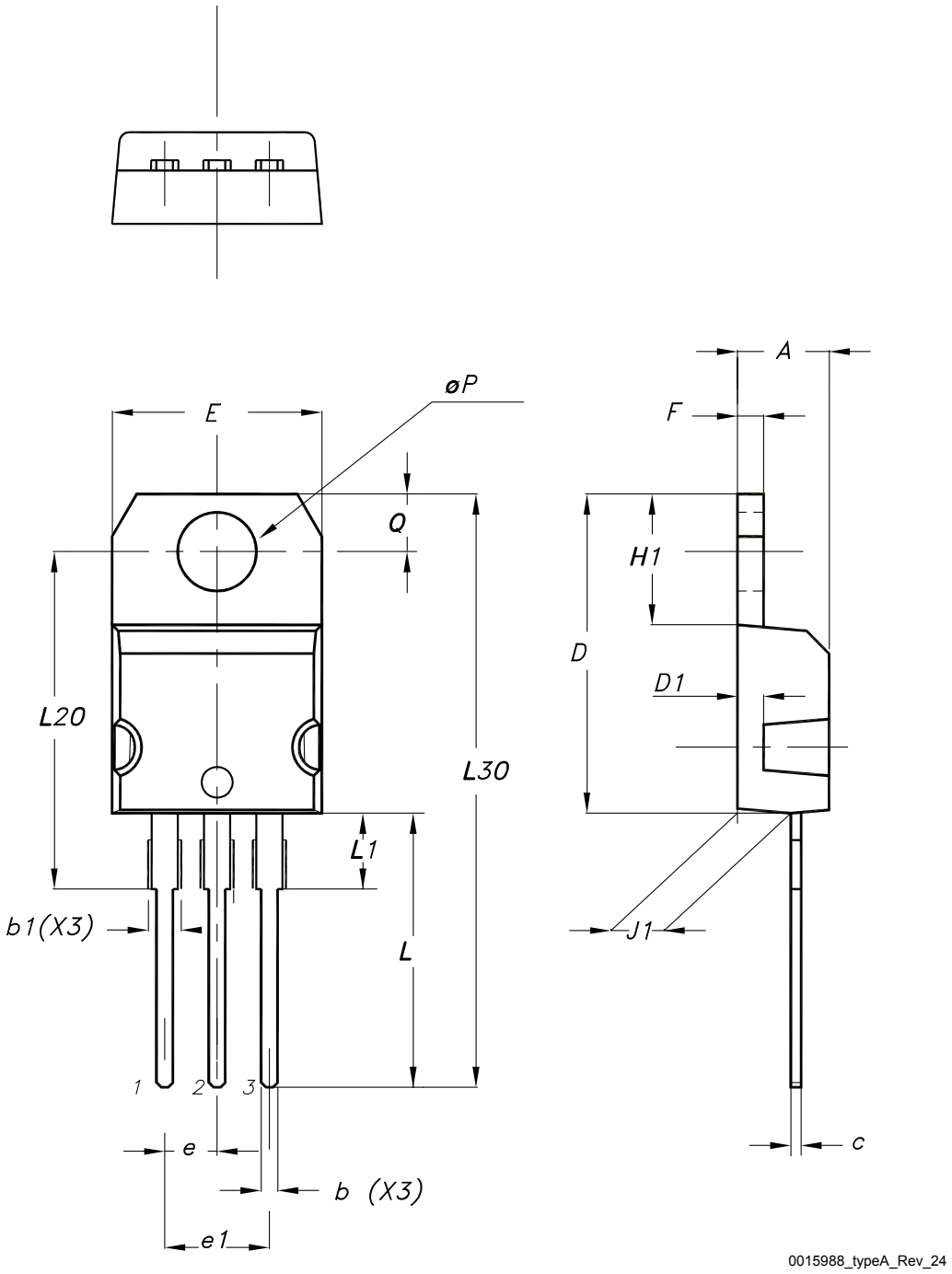

**Table 9. TO-220 type A package mechanical data**

| Dim. | mm | | |
|---|---|---|---|
| | Min. | Typ. | Max. |
| A | 4.40 | | 4.60 |
| b | 0.61 | | 0.88 |
| b1 | 1.14 | | 1.55 |
| c | 0.48 | | 0.70 |
| D | 15.25 | | 15.75 |
| D1 | | 1.27 | |
| E | 10.00 | | 10.40 |
| e | 2.40 | | 2.70 |
| e1 | 4.95 | | 5.15 |
| F | 1.23 | | 1.32 |
| H1 | 6.20 | | 6.60 |
| J1 | 2.40 | | 2.72 |
| L | 13.00 | | 14.00 |
| L1 | 3.50 | | 3.93 |
| L20 | | 16.40 | |
| L30 | | 28.90 | |
| øP | 3.75 | | 3.85 |
| Q | 2.65 | | 2.95 |
| Slug flatness | | 0.03 | 0.10 |

## 4.3 TO-247 package information

Figure 24. TO-247 package outline

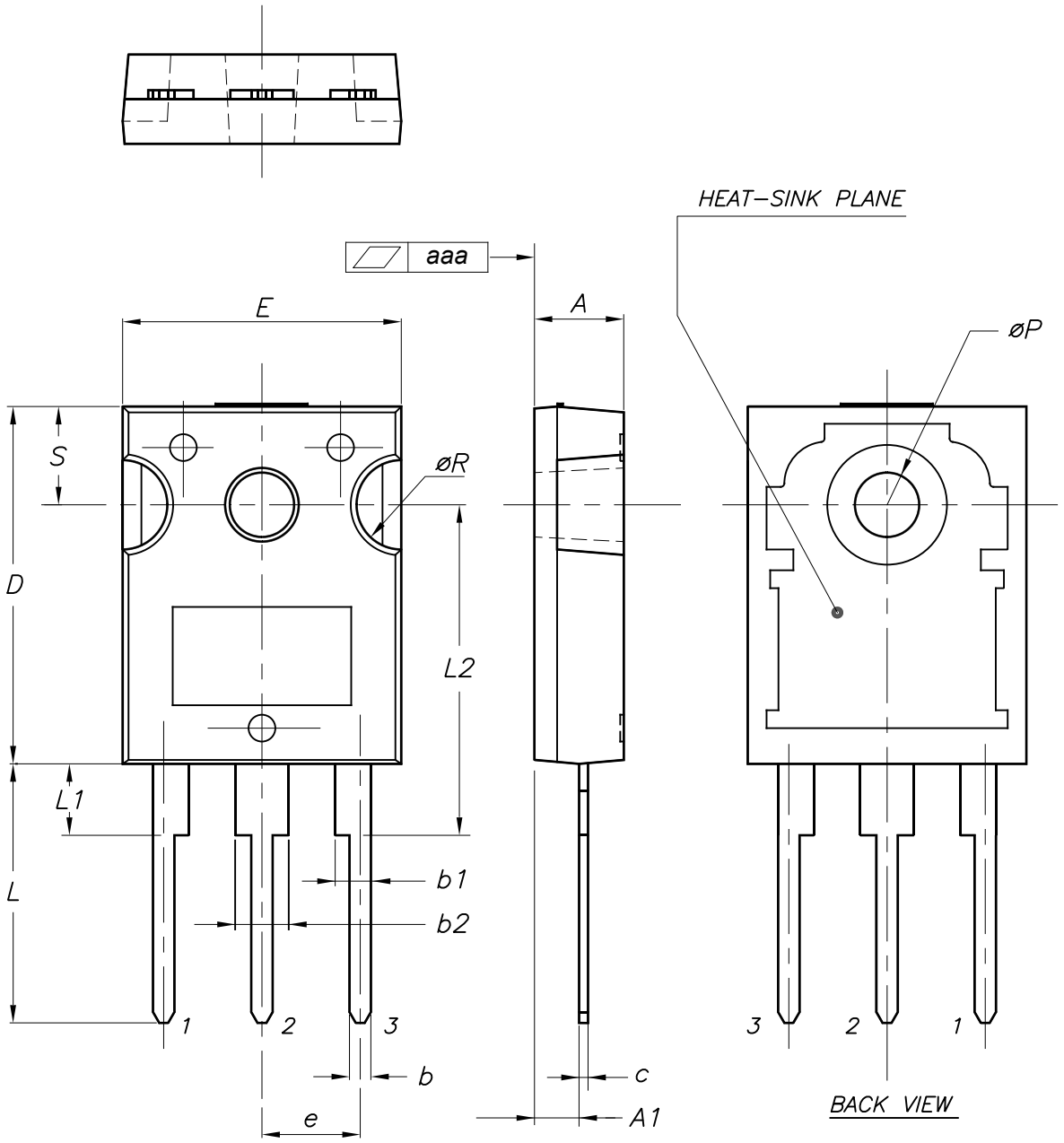


0075325_10

Table 10. TO-247 package mechanical data

| Dim. | mm | | |
|---|---|---|---|
| | Min. | Typ. | Max. |
| A | 4.85 | | 5.15 |
| A1 | 2.20 | | 2.60 |
| b | 1.0 | | 1.40 |
| b1 | 2.0 | | 2.40 |
| b2 | 3.0 | | 3.40 |
| c | 0.40 | | 0.80 |
| D | 19.85 | | 20.15 |
| E | 15.45 | | 15.75 |
| e | 5.30 | 5.45 | 5.60 |
| L | 14.20 | | 14.80 |
| L1 | 3.70 | | 4.30 |
| L2 | | 18.50 | |
| ØP | 3.55 | | 3.65 |
| ØR | 4.50 | | 5.50 |
| S | 5.30 | 5.50 | 5.70 |
| aaa | | 0.04 | 0.10 |

## 4.4 D²PAK packing information

Figure 25. D²PAK tape drawing (dimensions are in mm)

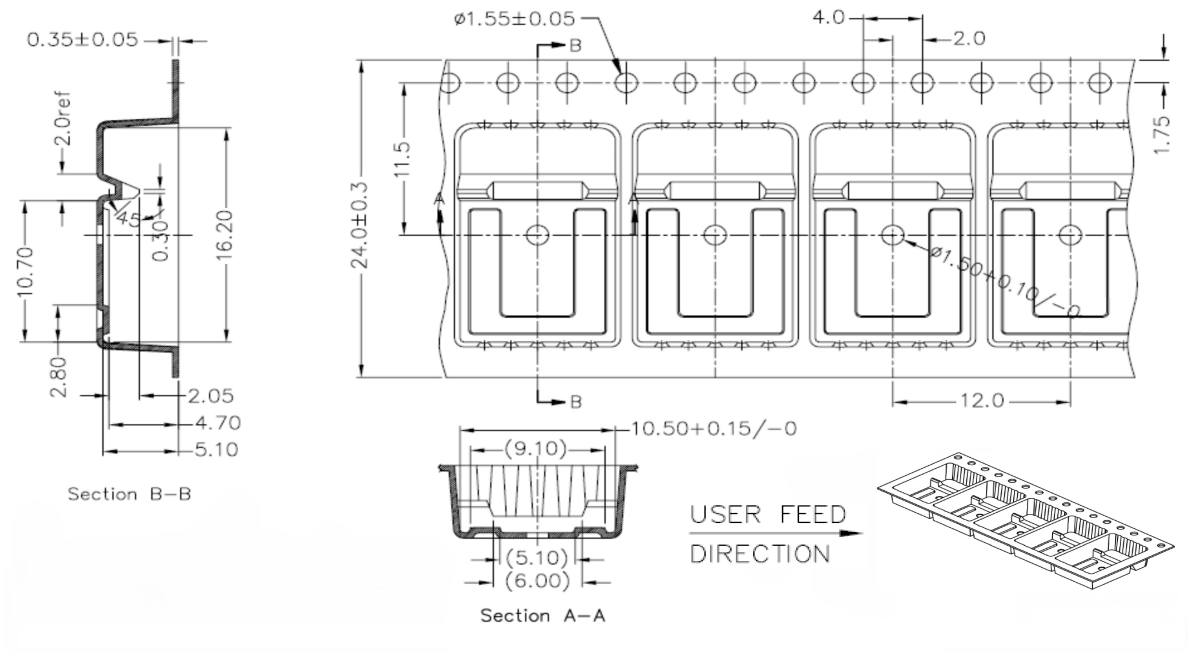


DM01095771_2

# 5 Ordering information

Table 11. **Order codes**

| Order codes | Marking | Package | Packing |
|---|---|---|---|
| STB40N60M2 | 40N60M2 | D²PAK | Tape and reel |
| STP40N60M2 | | TO-220 | Tube |
| STW40N60M2 | | TO-247 | |

## Revision history

**Table 12. Document revision history**

| Date | Revision | Changes |
|---|---|---|
| 01-Jul-2013 | 1 | First release. |
| 23-Sep-2013 | 2 | Added: TO-220FP and $I^2$PAKFP packages.<br>Inserted: VISO in *Table 2*.<br>Modified: values in *Table 4*, the entire typical values in *Table 6*, *7* and *8*.<br>Updated: *Section 4: Package mechanical data*.<br>Minor text changes. |
| 13-May-2014 | 3 | The part numbers STF40N60M2 and STFI40N60M2 have been moved to a separate datasheet.<br>Minor text changes. |
| 09-Aug-2016 | 4 | Updated title, features and description in cover page.<br>Updated *Table 2: Absolute maximum ratings*, *Table 5: On /off states* and *Table 8: Source drain diode*.<br>Updated *Section 4.1: D2PAK (TO-263) package information* and *Section 4.2: TO-220 package information*.<br>Minor text changes. |
| 18-Sep-2025 | 5 | Updated Section 4: Package information.<br>Minor text changes. |

# Contents

**1 Electrical ratings . . . . . 2**

**2 Electrical characteristics . . . . . 3**

2.1 Electrical characteristics (curves) . . . . . 5

**3 Test circuits . . . . . 8**

**4 Package information . . . . . 9**

4.1 D²PAK (TO-263) type A2 package information . . . . . 9

4.2 TO-220 type A package information . . . . . 12

4.3 TO-247 package information . . . . . 14

4.4 D²PAK packing information . . . . . 16

**5 Ordering information . . . . . 17**

**Revision history . . . . . 18**

**IMPORTANT NOTICE – READ CAREFULLY**

STMicroelectronics NV and its subsidiaries (“ST”) reserve the right to make changes, corrections, enhancements, modifications, and improvements to ST products and/or to this document at any time without notice.

In the event of any conflict between the provisions of this document and the provisions of any contractual arrangement in force between the purchasers and ST, the provisions of such contractual arrangement shall prevail.

The purchasers should obtain the latest relevant information on ST products before placing orders. ST products are sold pursuant to ST’s terms and conditions of sale in place at the time of order acknowledgment.

The purchasers are solely responsible for the choice, selection, and use of ST products and ST assumes no liability for application assistance or the design of the purchasers’ products.

No license, express or implied, to any intellectual property right is granted by ST herein.

Resale of ST products with provisions different from the information set forth herein shall void any warranty granted by ST for such product.

If the purchasers identify an ST product that meets their functional and performance requirements but that is not designated for the purchasers' market segment, the purchasers shall contact ST for more information.

ST and the ST logo are trademarks of ST. For additional information about ST trademarks, refer to www.st.com/trademarks. All other product or service names are the property of their respective owners.

Information in this document supersedes and replaces information previously supplied in any prior versions of this document.

© 2025 STMicroelectronics – All rights reserved