RM0473
Reference manual

Multiprotocol wireless 32-bit MCU Arm®-based Cortex®-M4 with FPU, Bluetooth® Low Energy radio solution

Introduction

This document is addressed to application developers. It provides complete information on how to use the STM32WB15CC microcontroller memory and peripherals.

The STM32WB15CC multiprotocol wireless and ultra-low-power devices embed a powerful and ultra-low-power radio compliant with the Bluetooth® Low Energy SIG specification v5.4. They contain a dedicated Arm® Cortex®-M0+ for performing the real-time low layer operation.

The STM32WB15CC microcontrollers feature 320 Kbytes flash memory and 48 Kbytes SRAM, and include state of the art patented technology.

Related documents

Available from STMicroelectronics web site *www.st.com*:

- STM32WB15CC datasheet (DS13258)
- STM32WB15CC errata sheet (ES0557)

For information on the Arm® Cortex®-M4 and Cortex®-M0+ cores refer to the corresponding Technical Reference Manuals, available from the www.arm.com website.

For information on Bluetooth® refer to www.bluetooth.com.

Contents

1 Documentation conventions 50

1.1 General information 50

1.2 List of abbreviations for registers 50

1.3 Register reset value 51

1.4 Glossary 51

1.5 Availability of peripherals 51

2 System and memory overview 52

2.1 System architecture 52

2.1.1 S0: CPU1 (CPU1 Cortex®-M4) I-bus 53

2.1.2 S1: CPU1 (CPU1 Cortex®-M4) D-bus 53

2.1.3 S2: CPU1 (CPU1 Cortex®-M4) S-bus 53

2.1.4 S3: CPU2 (Cortex®-M0+) S-bus 53

2.1.5 S4: DMA-bus 54

2.1.6 S5: Radio system-bus 54

2.1.7 BusMatrix 54

2.2 Memory organization 55

2.2.1 Introduction 55

2.2.2 Memory map and register boundary addresses 56

2.2.3 Bit banding 60

2.3 Boot configuration 61

2.4 CPU2 boot 62

2.5 CPU2 SRAM fetch disable 63

3 Embedded flash memory (FLASH) 64

3.1 Introduction 64

3.2 FLASH main features 64

3.3 FLASH functional description 65

3.3.1 Flash memory organization 65

3.3.2 Empty check 65

3.3.3 Error code correction (ECC) 66

3.3.4 Read access latency 66

3.3.5 Adaptive real-time memory accelerator (ART Accelerator) 68

3.3.6 Flash memory program and erase operations 71
3.3.7 Flash main memory erase sequences **72**
3.3.8 Flash main memory programming sequences 74
3.4 FLASH option bytes 79
3.4.1 Option bytes description 79
3.4.2 Option bytes programming 86
3.5 FLASH UID64 89
3.6 Flash memory protection 90
3.6.1 Read protection (RDP) 90
3.6.2 Proprietary code readout protection (PCROP) 94
3.6.3 Write protection (WRP) 95
3.6.4 CPU2 security (ESE) 96
3.7 FLASH program/erase suspension 97
3.8 FLASH interrupts 98
3.9 Register access protection 98
3.10 FLASH registers 99
3.10.1 Flash memory access control register (FLASH_ACR) 99
3.10.2 Flash memory key register (FLASH_KEYR) 100
3.10.3 Flash memory option key register (FLASH_OPTKEYR) 100
3.10.4 Flash memory status register (FLASH_SR) 101
3.10.5 Flash memory control register (FLASH_CR) 102
3.10.6 Flash memory ECC register (FLASH_ECCR) 104
3.10.7 Flash memory option register (FLASH_OPTR) 105
3.10.8 Flash memory PCROP zone A start address register (FLASH_PCROP1ASR) 108
3.10.9 Flash memory PCROP zone A end address register (FLASH_PCROP1AER) 108
3.10.10 Flash memory WRP area A address register (FLASH_WRP1AR) . . . 109
3.10.11 Flash memory WRP area B address register (FLASH_WRP1BR) . . . 109
3.10.12 Flash memory PCROP zone B start address register (FLASH_PCROP1BSR) 110
3.10.13 Flash memory PCROP zone B end address register (FLASH_PCROP1BER) 110
3.10.14 Flash memory IPCC mailbox data buffer address register (FLASH_IPCCBR) 111
3.10.15 Flash memory CPU2 access control register (FLASH_C2ACR) 111
3.10.16 Flash memory CPU2 status register (FLASH_C2SR) 112
3.10.17 Flash memory CPU2 control register (FLASH_C2CR) 114

3.10.18 Secure flash memory start address register (FLASH_SFR) 115
3.10.19 Flash memory secure SRAM2 start address and CPU2 reset vector register (FLASH_SRRVR) 116
3.10.20 FLASH register map 118

4 Radio system 120
4.1 Introduction 120
4.2 Main features 120
4.3 Radio system functional description 121
4.3.1 General description 121

5 Cyclic redundancy check calculation unit (CRC) 122
5.1 Introduction 122
5.2 CRC main features 122
5.3 CRC functional description 123
5.3.1 CRC block diagram 123
5.3.2 CRC internal signals 123
5.3.3 CRC operation 123
5.4 CRC registers 125
5.4.1 CRC data register (CRC_DR) 125
5.4.2 CRC independent data register (CRC_IDR) 125
5.4.3 CRC control register (CRC_CR) 126
5.4.4 CRC initial value (CRC_INIT) 127
5.4.5 CRC polynomial (CRC_POL) 127
5.4.6 CRC register map 128

6 Power control (PWR) 129
6.1 Power supplies 129
6.1.1 Independent analog peripherals supply 132
6.1.2 Battery backup domain 132
6.1.3 Voltage regulator 133
6.2 Power supply supervisor 134
6.2.1 Power-on reset (POR) / power-down reset (PDR) / brown-out reset (BOR) 134
6.2.2 Programmable voltage detector (PVD) 135
6.2.3 Peripheral voltage monitoring (PVM) 136
6.3 CPU2 boot 137

6.4 Low-power modes 139
6.4.1 Run mode 145
6.4.2 Low-power run mode (LP run) 145
6.4.3 Entering Low-power mode 146
6.4.4 Exiting Low-power mode 146
6.4.5 Sleep mode 148
6.4.6 Low-power sleep mode (LP sleep) 149
6.4.7 Stop0 mode 150
6.4.8 Stop1 mode 151
6.4.9 Standby mode 152
6.4.10 Shutdown mode 154
6.4.11 Auto wake-up from Low-power mode 155
6.5 Real-time radio information 156
6.6 PWR registers 157
6.6.1 PWR control register 1 (PWR_CR1) 157
6.6.2 PWR control register 2 (PWR_CR2) 158
6.6.3 PWR control register 3 (PWR_CR3) 159
6.6.4 PWR control register 4 (PWR_CR4) 160
6.6.5 PWR status register 1 (PWR_SR1) 161
6.6.6 PWR status register 2 (PWR_SR2) 162
6.6.7 PWR status clear register (PWR_SCR) 163
6.6.8 PWR control register 5 (PWR_CR5) 164
6.6.9 PWR Port A pull-up control register (PWR_PUCRA) 165
6.6.10 PWR Port A pull-down control register (PWR_PDCRA) 165
6.6.11 PWR Port B pull-up control register (PWR_PUCRB) 165
6.6.12 PWR Port B pull-down control register (PWR_PDCRB) 166
6.6.13 PWR Port C pull-up control register (PWR_PUCRC) 166
6.6.14 PWR Port C pull-down control register (PWR_PDCRC) 167
6.6.15 PWR Port E pull-up control register (PWR_PUCRE) 167
6.6.16 PWR Port E pull-down control register (PWR_PDCRE) 168
6.6.17 PWR Port H pull-up control register (PWR_PUCRH) 168
6.6.18 PWR Port H pull-down control register (PWR_PDCRH) 169
6.6.19 PWR CPU2 control register 1 (PWR_C2CR1) 169
6.6.20 PWR CPU2 control register 3 (PWR_C2CR3) 170
6.6.21 PWR extended status and status clear register (PWR_EXTSCR) . . . 171
6.6.22 PWR register map and reset value table 173

7 Peripherals interconnect matrix 175
7.1 Introduction 175
7.2 Connection summary 175
7.3 Interconnection details 176
7.3.1 From timer (TIM1/TIM2) to timer (TIM1/TIM2) 176
7.3.2 From timer (TIM1/TIM2) and EXTI to ADC (ADC1) 176
7.3.3 From ADC (ADC1) to timer (TIM1) 177
7.3.4 From LSE to timer (TIM2) 177
7.3.5 From RTC, COMP1 to low-power timers (LPTIM1/LPTIM2) 177
7.3.6 From timer (TIM1/TIM2) to comparator (COMP1) 177
7.3.7 From internal analog to ADC1 178
7.3.8 From comparator (COMP1) to timers (TIM1/TIM2) 178
7.3.9 From system errors to timer (TIM1) 179

8 Reset and clock control (RCC) 180
8.1 Reset 180
8.1.1 Power reset 180
8.1.2 System reset 180
8.1.3 Backup domain reset 182
8.2 Clocks 182
8.2.1 HSE clock 186
8.2.2 HSI16 clock 188
8.2.3 MSI clock 188
8.2.4 PLL 189
8.2.5 LSE clock 190
8.2.6 LSI1 clock 191
8.2.7 LSI2 clock 191
8.2.8 System clock (SYSCLK) selection 191
8.2.9 Clock source frequency 191
8.2.10 Clock security system (CSS) on HSE 192
8.2.11 Clock security system on LSE (LSECSS) 192
8.2.12 LSI source selection 192
8.2.13 SMPS step-down converter clock 193
8.2.14 ADC clock 194
8.2.15 RTC clock 194
8.2.16 Timer clock 194

8.2.17 Watchdog clock 194
8.2.18 True RNG clock 195
8.2.19 Clock-out capability 195
8.2.20 Peripheral clocks enable 195
8.3 Low-power modes 197
8.4 RCC registers 199
8.4.1 RCC clock control register (RCC_CR) 199
8.4.2 RCC internal clock sources calibration register (RCC_ICSCR) 202
8.4.3 RCC clock configuration register (RCC_CFGR) 203
8.4.4 RCC PLL configuration register (RCC_PLLCFGR) 205
8.4.5 RCC clock interrupt enable register (RCC_CIER) 208
8.4.6 RCC clock interrupt flag register (RCC_CIFR) 209
8.4.7 RCC clock interrupt clear register (RCC_CICR) 211
8.4.8 RCC SMPS step-down converter control register (RCC_SMPSCR) . . 212
8.4.9 RCC AHB1 peripheral reset register (RCC_AHB1RSTR) 213
8.4.10 RCC AHB2 peripheral reset register (RCC_AHB2RSTR) 214
8.4.11 RCC AHB4 peripheral reset register (RCC_AHB4RSTR) 215
8.4.12 RCC APB1 peripheral reset register 1 (RCC_APB1RSTR1) 216
8.4.13 RCC APB1 peripheral reset register 2 (RCC_APB1RSTR2) 216
8.4.14 RCC APB2 peripheral reset register (RCC_APB2RSTR) 217
8.4.15 RCC APB3 peripheral reset register (RCC_APB3RSTR) 218
8.4.16 RCC AHB1 peripheral clock enable register (RCC_AHB1ENR) 218
8.4.17 RCC AHB2 peripheral clock enable register (RCC_AHB2ENR) 219
8.4.18 RCC AHB4 peripheral clock enable register (RCC_AHB4ENR) 220
8.4.19 RCC APB1 peripheral clock enable register 1 (RCC_APB1ENR1) . . . 221
8.4.20 RCC APB1 peripheral clock enable register 2 (RCC_APB1ENR2) . . . 222
8.4.21 RCC APB2 peripheral clock enable register (RCC_APB2ENR) 222
8.4.22 RCC AHB1 peripheral clocks enable in Sleep modes register (RCC_AHB1SMENR) 223
8.4.23 RCC AHB2 peripheral clocks enable in Sleep modes register (RCC_AHB2SMENR) 224
8.4.24 RCC AHB4 peripheral clocks enable in Sleep and Stop modes register (RCC_AHB4SMENR) 225
8.4.25 RCC APB1 peripheral clocks enable in Sleep mode register 1 (RCC_APB1SMENR1) 226
8.4.26 RCC APB1 peripheral clocks enable in Sleep mode register 2 (RCC_APB1SMENR2) 227
8.4.27 RCC APB2 peripheral clocks enable in Sleep mode register (RCC_APB2SMENR) 228

8.4.28 RCC peripherals independent clock configuration register (RCC_CCIPR) 229
8.4.29 RCC backup domain control register (RCC_BDCR) 230
8.4.30 RCC control/status register (RCC_CSR) 232
8.4.31 RCC clock HSE register (RCC_HSECR) 234
8.4.32 RCC extended clock recovery register (RCC_EXTCFGR) 235
8.4.33 RCC CPU2 AHB1 peripheral clock enable register (RCC_C2AHB1ENR) 237
8.4.34 RCC CPU2 AHB2 peripheral clock enable register (RCC_C2AHB2ENR) 238
8.4.35 RCC CPU2 AHB4 peripheral clock enable register (RCC_C2AHB4ENR) 239
8.4.36 RCC CPU2 APB1 peripheral clock enable register 1 (RCC_C2APB1ENR1) 240
8.4.37 RCC CPU2 APB1 peripheral clock enable register 2 (RCC_C2APB1ENR2) 241
8.4.38 RCC CPU2 APB2 peripheral clock enable register (RCC_C2APB2ENR) 241
8.4.39 RCC CPU2 APB3 peripheral clock enable register (RCC_C2APB3ENR) 242
8.4.40 RCC CPU2 AHB1 peripheral clocks enable in Sleep modes register (RCC_C2AHB1SMENR) 243
8.4.41 RCC CPU2 AHB2 peripheral clocks enable in Sleep modes register (RCC_C2AHB2SMENR) 244
8.4.42 RCC CPU2 AHB4 peripheral clocks enable in Sleep mode register (RCC_C2AHB4SMENR) 245
8.4.43 RCC CPU2 APB1 peripheral clocks enable in Sleep mode register 1 (RCC_C2APB1SMENR1) 246
8.4.44 RCC CPU2 APB1 peripheral clocks enable in Sleep mode register 2 (RCC_C2APB1SMENR2) 247
8.4.45 RCC CPU2 APB2 peripheral clocks enable in Sleep mode register (RCC_C2APB2SMENR) 247
8.4.46 RCC CPU2 APB3 peripheral clock enable in Sleep mode register (RCC_C2APB3SMENR) 248
8.4.47 RCC register map 249

9 General-purpose I/Os (GPIO) 255
9.1 Introduction 255
9.2 GPIO main features 255
9.3 GPIO functional description 255
9.3.1 General-purpose I/O (GPIO) 258

9.3.2 I/O pin alternate function multiplexer and mapping 258
9.3.3 I/O port control registers 259
9.3.4 I/O port data registers 259
9.3.5 I/O data bitwise handling 259
9.3.6 GPIO locking mechanism 260
9.3.7 I/O alternate function input/output 260
9.3.8 External interrupt/wakeup lines 260
9.3.9 Input configuration 260
9.3.10 Output configuration 261
9.3.11 Alternate function configuration 262
9.3.12 Analog configuration 262
9.3.13 Using the LSE oscillator pins as GPIOs 263
9.3.14 Using the GPIO pins in the RTC supply domain 263
9.3.15 Using PH3 as GPIO 263
9.4 GPIO registers 264
9.4.1 GPIO port mode register (GPIOx_MODER) (x =A to C and E, H) 264
9.4.2 GPIO port output type register (GPIOx_OTYPER) (x = A to C and E, H) 264
9.4.3 GPIO port output speed register (GPIOx_OSPEEDR) (x = A to C and E, H) 265
9.4.4 GPIO port pull-up/pull-down register (GPIOx_PUPDR) (x = A to C and E, H) 266
9.4.5 GPIO port input data register (GPIOx_IDR) (x = A to C and E, H) 266
9.4.6 GPIO port output data register (GPIOx_ODR) (x = A to C and E, H) 267
9.4.7 GPIO port bit set/reset register (GPIOx_BSRR) (x = A to C and E, H) 267
9.4.8 GPIO port configuration lock register (GPIOx_LCKR) (x = A to C and E, H) 268
9.4.9 GPIO alternate function low register (GPIOx_AFRL) (x = A to C and E, H) 269
9.4.10 GPIO alternate function high register (GPIOx_AFRH) (x = A to C and E, H) 270
9.4.11 GPIO port bit reset register (GPIOx_BRR) (x = A to C and E, H) 271
9.4.12 GPIO register map 272

10 System configuration controller (SYSCFG) 276
10.1 SYSCFG main features 276

10.2 SYSCFG registers 276
10.2.1 SYSCFG memory remap register (SYSCFG_MEMRMP) 276
10.2.2 SYSCFG configuration register 1 (SYSCFG_CFGR1) 277
10.2.3 SYSCFG external interrupt configuration register 1 (SYSCFG_EXTICR1) 278
10.2.4 SYSCFG external interrupt configuration register 2 (SYSCFG_EXTICR2) 279
10.2.5 SYSCFG external interrupt configuration register 3 (SYSCFG_EXTICR3) 280
10.2.6 SYSCFG external interrupt configuration register 4 (SYSCFG_EXTICR4) 282
10.2.7 SYSCFG SRAM2 control and status register (SYSCFG_SCSR) 283
10.2.8 SYSCFG configuration register 2 (SYSCFG_CFGR2) 284
10.2.9 SYSCFG SRAM2 write protection register (SYSCFG_SWPR1) 285
10.2.10 SYSCFG SRAM2 key register (SYSCFG_SKR) 285
10.2.11 SYSCFG SRAM2 write protection register 2 (SYSCFG_SWPR2) . . . 285
10.2.12 SYSCFG CPU1 interrupt mask register 1 (SYSCFG_IMR1) 286
10.2.13 SYSCFG CPU1 interrupt mask register 2 (SYSCFG_IMR2) 286
10.2.14 SYSCFG CPU2 interrupt mask register 1 (SYSCFG_C2IMR1) 287
10.2.15 SYSCFG CPU2 interrupt mask register 2 (SYSCFG_C2IMR2) 288
10.2.16 SYSCFG secure IP control register (SYSCFG_SIPCR) 288
10.2.17 SYSCFG register map 290

11 Direct memory access controller (DMA) 292
11.1 Introduction 292
11.2 DMA main features 292
11.3 DMA implementation 293
11.3.1 DMA1 293
11.3.2 DMA request mapping 293
11.4 DMA functional description 293
11.4.1 DMA block diagram 293
11.4.2 DMA pins and internal signals 294
11.4.3 DMA transfers 294
11.4.4 DMA arbitration 295
11.4.5 DMA channels 295
11.4.6 DMA data width, alignment, and endianness 299
11.4.7 DMA error management 300
11.5 DMA interrupts 301

11.6 DMA registers 301
11.6.1 DMA interrupt status register (DMA_ISR) 301
11.6.2 DMA interrupt flag clear register (DMA_IFCR) 303
11.6.3 DMA channel x configuration register (DMA_CCRx) 305
11.6.4 DMA channel x number of data to transfer register (DMA_CNDTRx) . 307
11.6.5 DMA channel x peripheral address register (DMA_CPARx) 308
11.6.6 DMA channel x memory address register (DMA_CMARx) 309
11.6.7 DMA register map 309

12 DMA request multiplexer (DMAMUX) 312
12.1 Introduction 312
12.2 DMAMUX main features 313
12.3 DMAMUX implementation 313
12.3.1 DMAMUX instantiation 313
12.3.2 DMAMUX mapping 313
12.4 DMAMUX functional description 316
12.4.1 DMAMUX block diagram 316
12.4.2 DMAMUX signals 317
12.4.3 DMAMUX channels 317
12.4.4 DMAMUX request line multiplexer 317
12.4.5 DMAMUX request generator 320
12.5 DMAMUX interrupts 321
12.6 DMAMUX registers 322
12.6.1 DMAMUX request line multiplexer channel x configuration register (DMAMUX_CxCR) 322
12.6.2 DMAMUX request line multiplexer interrupt channel status register (DMAMUX_CSR) 323
12.6.3 DMAMUX request line multiplexer interrupt clear flag register (DMAMUX_CFR) 323
12.6.4 DMAMUX request generator channel x configuration register (DMAMUX_RGxCR) 324
12.6.5 DMAMUX request generator interrupt status register (DMAMUX_RGSR) 325
12.6.6 DMAMUX request generator interrupt clear flag register (DMAMUX_RGCFR) 325
12.6.7 DMAMUX register map 326

13 Nested vectored interrupt controller (NVIC) 328

13.1 NVIC main features 328
13.2 Interrupt block diagram 328
13.3 Interrupt and exception vectors 329
13.4 Interrupt list 334

14 Extended interrupt and event controller (EXTI) 337
14.1 EXTI main features 337
14.2 EXTI block diagram 337
14.2.1 EXTI connections between peripherals and CPU 339
14.3 EXTI functional description 340
14.3.1 EXTI configurable event input wakeup 340
14.3.2 EXTI direct event input wakeup 342
14.4 EXTI functional behavior 342
14.5 EXTI registers 344
14.5.1 EXTI rising trigger selection register (EXTI_RTSR1) 344
14.5.2 EXTI falling trigger selection register (EXTI_FTSR1) 345
14.5.3 EXTI software interrupt event register (EXTI_SWIER1) 345
14.5.4 EXTI pending register (EXTI_PR1) 346
14.5.5 EXTI rising trigger selection register (EXTI_RTSR2) 346
14.5.6 EXTI falling trigger selection register (EXTI_FTSR2) 347
14.5.7 EXTI software interrupt event register (EXTI_SWIER2) 347
14.5.8 EXTI pending register (EXTI_PR2) 348
14.5.9 EXTI CPU wakeup with interrupt mask register (EXTI_IMR1) 349
14.5.10 EXTI CPU2 wakeup with interrupt mask register (EXTI_C2IMR1) . . . 349
14.5.11 EXTI CPU wakeup with event mask register (EXTI_EMR1) 350
14.5.12 EXTI CPU2 wakeup with event mask register (EXTI_C2EMR1) 350
14.5.13 EXTI CPU wakeup with interrupt mask register (EXTI_IMR2) 351
14.5.14 EXTI CPU2 wakeup with interrupt mask register (EXTI_C2IMR2) . . . 351
14.5.15 EXTI CPU wakeup with event mask register (EXTI_EMR2) 352
14.5.16 EXTI CPU2 wakeup with event mask register (EXTI_C2EMR2) 352
14.5.17 EXTI register map 353

15 Analog-to-digital converter (ADC) 355
15.1 Introduction 355
15.2 ADC main features 356
15.3 ADC functional description 357

15.3.1 ADC pins and internal signals . . . 357
15.3.2 ADC voltage regulator (ADVREGEN) . . . 358
15.3.3 Calibration (ADCAL) . . . 359
15.3.4 ADC on-off control (ADEN, ADDIS, ADRDY) . . . 361
15.3.5 ADC clock (CKMODE, PRESC[3:0]) . . . 362
15.3.6 ADC connectivity . . . 364
15.3.7 Configuring the ADC . . . 365
15.3.8 Channel selection (CHSEL, SCANDIR, CHSELRMOD) . . . 365
15.3.9 Programmable sampling time (SMPx[2:0]) . . . 366
15.3.10 Single conversion mode (CONT = 0) . . . 367
15.3.11 Continuous conversion mode (CONT = 1) . . . 367
15.3.12 Starting conversions (ADSTART) . . . 368
15.3.13 Timings . . . 369
15.3.14 Stopping an ongoing conversion (ADSTP) . . . 370
15.4 Conversion on external trigger and trigger polarity (EXTSEL, EXTEN) . 370
15.4.1 Discontinuous mode (DISCEN) . . . 371
15.4.2 Programmable resolution (RES) - Fast conversion mode . . . 371
15.4.3 End of conversion, end of sampling phase (EOC, EOSMP flags) . . . 372
15.4.4 End of conversion sequence (EOS flag) . . . 372
15.4.5 Example timing diagrams (single/continuous modes hardware/software triggers) . . . 373
15.4.6 Low frequency trigger mode . . . 375
15.5 Data management . . . 375
15.5.1 Data register and data alignment (ADC_DR, ALIGN) . . . 375
15.5.2 ADC overrun (OVR, OVRMOD) . . . 375
15.5.3 Managing a sequence of data converted without using the DMA . . . 377
15.5.4 Managing converted data without using the DMA without overrun . . . 377
15.5.5 Managing converted data using the DMA . . . 377
15.6 Low-power features . . . 378
15.6.1 Wait mode conversion . . . 378
15.6.2 Auto-off mode (AUTOFF) . . . 379
15.7 Analog window watchdog . . . 381
15.7.1 Description of the analog watchdog . . . 381
15.7.2 ADC_AWD1_OUT output signal generation . . . 382
15.7.3 Analog watchdog threshold control . . . 384
15.8 Temperature sensor and internal reference voltage . . . 384
15.9 Battery voltage monitoring . . . 387

15.10 ADC interrupts 388
15.11 ADC registers 389
15.11.1 ADC interrupt and status register (ADC_ISR) 389
15.11.2 ADC interrupt enable register (ADC_IER) 390
15.11.3 ADC control register (ADC_CR) 391
15.11.4 ADC configuration register 1 (ADC_CFGR1) 393
15.11.5 ADC configuration register 2 (ADC_CFGR2) 396
15.11.6 ADC sampling time register (ADC_SMPR) 397
15.11.7 ADC watchdog threshold register (ADC_TR) 398
15.11.8 ADC channel selection register (ADC_CHSELR) 399
15.11.9 ADC channel selection register [alternate] (ADC_CHSELR) 399
15.11.10 ADC data register (ADC_DR) 401
15.11.11 ADC calibration factor (ADC_CALFACT) 402
15.11.12 ADC common configuration register (ADC_CCR) 402
15.12 ADC register map 403

16 Comparator (COMP) 406
16.1 Introduction 406
16.2 COMP main features 406
16.3 COMP functional description 407
16.3.1 COMP block diagram 407
16.3.2 COMP pins and internal signals 407
16.3.3 COMP reset and clocks 408
16.3.4 Comparator LOCK mechanism 408
16.3.5 Window comparator 408
16.3.6 Hysteresis 409
16.3.7 Comparator output blanking function 410
16.3.8 COMP power and speed modes 410
16.4 COMP low-power modes 411
16.5 COMP interrupts 411
16.6 COMP registers 412
16.6.1 Comparator 1 control and status register (COMP1_CSR) 412
16.6.2 COMP register map 415

17 Touch sensing controller (TSC) 416
17.1 Introduction 416

17.2 TSC main features 416
17.3 TSC functional description 417
17.3.1 TSC block diagram 417
17.3.2 Surface charge transfer acquisition overview 417
17.3.3 Reset and clocks 420
17.3.4 Charge transfer acquisition sequence 420
17.3.5 Spread spectrum feature 421
17.3.6 Max count error 422
17.3.7 Sampling capacitor I/O and channel I/O mode selection 422
17.3.8 Acquisition mode 423
17.3.9 I/O hysteresis and analog switch control 423
17.4 TSC low-power modes 424
17.5 TSC interrupts 424
17.6 TSC registers 424
17.6.1 TSC control register (TSC_CR) 424
17.6.2 TSC interrupt enable register (TSC_IER) 427
17.6.3 TSC interrupt clear register (TSC_ICR) 428
17.6.4 TSC interrupt status register (TSC_ISR) 428
17.6.5 TSC I/O hysteresis control register (TSC_IOHCR) 429
17.6.6 TSC I/O analog switch control register (TSC_IOASCR) 429
17.6.7 TSC I/O sampling control register (TSC_IOSCR) 430
17.6.8 TSC I/O channel control register (TSC_IOCCR) 430
17.6.9 TSC I/O group control status register (TSC_IOGCSR) 431
17.6.10 TSC I/O group x counter register (TSC_IOGxCR) 431
17.6.11 TSC register map 432

18 True random number generator (RNG) 434
18.1 Introduction 434
18.2 RNG main features 434
18.3 RNG functional description 435
18.3.1 RNG block diagram 435
18.3.2 RNG internal signals 435
18.3.3 Random number generation 436
18.3.4 RNG initialization 438
18.3.5 RNG operation 439
18.3.6 RNG clocking 440

18.3.7 Error management 440
18.3.8 RNG low-power use 441
18.4 RNG interrupts 441
18.5 RNG processing time 441
18.6 RNG entropy source validation 442
18.6.1 Introduction 442
18.6.2 Validation conditions 442
18.7 RNG registers 443
18.7.1 RNG control register (RNG_CR) 443
18.7.2 RNG status register (RNG_SR) 443
18.7.3 RNG data register (RNG_DR) 444
18.7.4 RNG register map 445

19 AES hardware accelerator (AES) 446
19.1 Introduction 446
19.2 AES main features 446
19.3 AES implementation 446
19.4 AES functional description 447
19.4.1 AES block diagram 447
19.4.2 AES internal signals 447
19.4.3 AES cryptographic core 447
19.4.4 AES procedure to perform a cipher operation 453
19.4.5 AES decryption round key preparation 456
19.4.6 AES ciphertext stealing and data padding 457
19.4.7 AES task suspend and resume 457
19.4.8 AES basic chaining modes (ECB, CBC) 458
19.4.9 AES counter (CTR) mode 463
19.4.10 AES Galois/counter mode (GCM) 465
19.4.11 AES Galois message authentication code (GMAC) 470
19.4.12 AES counter with CBC-MAC (CCM) 472
19.4.13 AES data registers and data swapping 477
19.4.14 AES key registers 479
19.4.15 AES initialization vector registers 479
19.4.16 AES DMA interface 480
19.4.17 AES error management 481
19.5 AES interrupts 482

19.6 AES processing latency 482
19.7 AES registers 483
19.7.1 AES control register (AES_CR) 483
19.7.2 AES status register (AES_SR) 486
19.7.3 AES data input register (AES_DINR) 487
19.7.4 AES data output register (AES_DOUTR) 487
19.7.5 AES key register 0 (AES_KEYR0) 488
19.7.6 AES key register 1 (AES_KEYR1) 489
19.7.7 AES key register 2 (AES_KEYR2) 489
19.7.8 AES key register 3 (AES_KEYR3) 489
19.7.9 AES initialization vector register 0 (AES_IVR0) 490
19.7.10 AES initialization vector register 1 (AES_IVR1) 490
19.7.11 AES initialization vector register 2 (AES_IVR2) 490
19.7.12 AES initialization vector register 3 (AES_IVR3) 491
19.7.13 AES key register 4 (AES_KEYR4) 491
19.7.14 AES key register 5 (AES_KEYR5) 491
19.7.15 AES key register 6 (AES_KEYR6) 492
19.7.16 AES key register 7 (AES_KEYR7) 492
19.7.17 AES suspend registers (AES_SUSPxR) 492
19.7.18 AES register map 493

20 Public key accelerator (PKA) 495
20.1 Introduction 495
20.2 PKA main features 495
20.3 PKA functional description 495
20.3.1 PKA block diagram 495
20.3.2 PKA internal signals 496
20.3.3 PKA reset and clocks 496
20.3.4 PKA public key acceleration 496
20.3.5 Typical applications for PKA 498
20.3.6 PKA procedure to perform an operation 500
20.3.7 PKA error management 501
20.4 PKA operating modes 501
20.4.1 Introduction 501
20.4.2 Montgomery parameter computation 502
20.4.3 Modular addition 503

20.4.4 Modular subtraction . . . 503
20.4.5 Modular and Montgomery multiplication . . . 503
20.4.6 Modular exponentiation . . . 504
20.4.7 Modular inversion . . . 505
20.4.8 Modular reduction . . . 506
20.4.9 Arithmetic addition . . . 506
20.4.10 Arithmetic subtraction . . . 506
20.4.11 Arithmetic multiplication . . . 507
20.4.12 Arithmetic comparison . . . 507
20.4.13 RSA CRT exponentiation . . . 507
20.4.14 Point on elliptic curve Fp check . . . 508
20.4.15 ECC Fp scalar multiplication . . . 509
20.4.16 ECDSA sign . . . 510
20.4.17 ECDSA verification . . . 512
20.5 Example of configurations and processing times . . . 513
20.5.1 Supported elliptic curves . . . 513
20.5.2 Computation times . . . 515
20.6 PKA interrupts . . . 516
20.7 PKA registers . . . 517
20.7.1 PKA control register (PKA_CR) . . . 517
20.7.2 PKA status register (PKA_SR) . . . 518
20.7.3 PKA clear flag register (PKA_CLRFR) . . . 519
20.7.4 PKA RAM . . . 519
20.7.5 PKA register map . . . 520

21 Advanced-control timer (TIM1) . . . 521
21.1 TIM1 introduction . . . 521
21.2 TIM1 main features . . . 522
21.3 TIM1 functional description . . . 524
21.3.1 Time-base unit . . . 524
21.3.2 Counter modes . . . 526
21.3.3 Repetition counter . . . 537
21.3.4 External trigger input . . . 539
21.3.5 Clock selection . . . 540
21.3.6 Capture/compare channels . . . 544
21.3.7 Input capture mode . . . 546

21.3.8 PWM input mode 547
21.3.9 Forced output mode 548
21.3.10 Output compare mode 549
21.3.11 PWM mode 550
21.3.12 Asymmetric PWM mode 553
21.3.13 Combined PWM mode 554
21.3.14 Combined 3-phase PWM mode 555
21.3.15 Complementary outputs and dead-time insertion 556
21.3.16 Using the break function 558
21.3.17 Bidirectional break inputs 564
21.3.18 Clearing the OCxREF signal on an external event 566
21.3.19 6-step PWM generation 567
21.3.20 One-pulse mode 568
21.3.21 Retriggerable one pulse mode 569
21.3.22 Encoder interface mode 570
21.3.23 UIF bit remapping 572
21.3.24 Timer input XOR function 573
21.3.25 Interfacing with Hall sensors 573
21.3.26 Timer synchronization 576
21.3.27 ADC synchronization 580
21.3.28 DMA burst mode 580
21.3.29 Debug mode 581
21.4 TIM1 registers 582
21.4.1 TIM1 control register 1 (TIM1_CR1) 582
21.4.2 TIM1 control register 2 (TIM1_CR2) 583
21.4.3 TIM1 slave mode control register (TIM1_SMCR) 586
21.4.4 TIM1 DMA/interrupt enable register (TIM1_DIER) 588
21.4.5 TIM1 status register (TIM1_SR) 590
21.4.6 TIM1 event generation register (TIM1_EGR) 592
21.4.7 TIM1 capture/compare mode register 1 (TIM1_CCMR1) 593
21.4.8 TIM1 capture/compare mode register 1 [alternate] (TIM1_CCMR1) 594
21.4.9 TIM1 capture/compare mode register 2 (TIM1_CCMR2) 597
21.4.10 TIM1 capture/compare mode register 2 [alternate] (TIM1_CCMR2) 598

21.4.11 TIM1 capture/compare enable register (TIM1_CCER) 599
21.4.12 TIM1 counter (TIM1_CNT) 603
21.4.13 TIM1 prescaler (TIM1_PSC) 603
21.4.14 TIM1 auto-reload register (TIM1_ARR) 603
21.4.15 TIM1 repetition counter register (TIM1_RCR) 604
21.4.16 TIM1 capture/compare register 1 (TIM1_CCR1) 604
21.4.17 TIM1 capture/compare register 2 (TIM1_CCR2) 605
21.4.18 TIM1 capture/compare register 3 (TIM1_CCR3) 605
21.4.19 TIM1 capture/compare register 4 (TIM1_CCR4) 606
21.4.20 TIM1 break and dead-time register (TIM1_BDTR) 606
21.4.21 TIM1 DMA control register (TIM1_DCR) 610
21.4.22 TIM1 DMA address for full transfer (TIM1_DMAR) 611
21.4.23 TIM1 option register 1 (TIM1_OR1) 612
21.4.24 TIM1 capture/compare mode register 3 (TIM1_CCMR3) 612
21.4.25 TIM1 capture/compare register 5 (TIM1_CCR5) 613
21.4.26 TIM1 capture/compare register 6 (TIM1_CCR6) 614
21.4.27 TIM1 alternate function option register 1 (TIM1_AF1) 615
21.4.28 TIM1 Alternate function register 2 (TIM1_AF2) 616
21.4.29 TIM1 timer input selection register (TIM1_TISEL) 617
21.4.30 TIM1 register map 618

22 General-purpose timer (TIM2) 621

22.1 TIM2 introduction 621
22.2 TIM2 main features 621
22.3 TIM2 functional description 623
22.3.1 Time-base unit 623
22.3.2 Counter modes 625
22.3.3 Clock selection 635
22.3.4 Capture/Compare channels 639

22.3.5 Input capture mode 641
22.3.6 PWM input mode 642
22.3.7 Forced output mode 643
22.3.8 Output compare mode 643
22.3.9 PWM mode 644
22.3.10 Asymmetric PWM mode 648
22.3.11 Combined PWM mode 648
22.3.12 Clearing the OCxREF signal on an external event 649
22.3.13 One-pulse mode 651
22.3.14 Retriggerable one pulse mode 652
22.3.15 Encoder interface mode 653
22.3.16 UIF bit remapping 655
22.3.17 Timer input XOR function 655
22.3.18 Timers and external trigger synchronization 656
22.3.19 Timer synchronization 659
22.3.20 DMA burst mode 664
22.3.21 Debug mode 665
22.4 TIM2 registers 666
22.4.1 TIM2 control register 1 (TIM2_CR1) 666
22.4.2 TIM2 control register 2 (TIM2_CR2) 667
22.4.3 TIM2 slave mode control register (TIM2_SMCR) 669
22.4.4 TIM2 DMA/Interrupt enable register (TIM2_DIER) 672
22.4.5 TIM2 status register (TIM2_SR) 673
22.4.6 TIM2 event generation register (TIM2_EGR) 675
22.4.7 TIM2 capture/compare mode register 1 (TIM2_CCMR1) 676
22.4.8 TIM2 capture/compare mode register 1 [alternate] (TIM2_CCMR1) . . 677
22.4.9 TIM2 capture/compare mode register 2 (TIM2_CCMR2) 680
22.4.10 TIM2 capture/compare mode register 2 [alternate] (TIM2_CCMR2) . . 681
22.4.11 TIM2 capture/compare enable register (TIM2_CCER) 682
22.4.12 TIM2 counter (TIM2_CNT) 683
22.4.13 TIM2 counter [alternate] (TIM2_CNT) 684
22.4.14 TIM2 prescaler (TIM2_PSC) 684
22.4.15 TIM2 auto-reload register (TIM2_ARR) 684
22.4.16 TIM2 capture/compare register 1 (TIM2_CCR1) 685
22.4.17 TIM2 capture/compare register 2 (TIM2_CCR2) 685
22.4.18 TIM2 capture/compare register 3 (TIM2_CCR3) 686

22.4.19 TIM2 capture/compare register 4 (TIM2_CCR4) 686
22.4.20 TIM2 DMA control register (TIM2_DCR) 687
22.4.21 TIM2 DMA address for full transfer (TIM2_DMAR) 687
22.4.22 TIM2 option register 1 (TIM2_OR1) 688
22.4.23 TIM2 alternate function option register 1 (TIM2_AF1) 688
22.4.24 TIM2 timer input selection register (TIM2_TISEL) 689
22.4.25 TIMx register map 690

23 Low-power timer (LPTIM) 693

23.1 Introduction 693
23.2 LPTIM main features 693
23.3 LPTIM implementation 694
23.4 LPTIM functional description 694
23.4.1 LPTIM block diagram 694
23.4.2 LPTIM trigger mapping 695
23.4.3 LPTIM reset and clocks 695
23.4.4 Glitch filter 696
23.4.5 Prescaler 697
23.4.6 Trigger multiplexer 697
23.4.7 Operating mode 698
23.4.8 Timeout function 699
23.4.9 Waveform generation 699
23.4.10 Register update 701
23.4.11 Counter mode 701
23.4.12 Timer enable 702
23.4.13 Timer counter reset 702
23.4.14 Encoder mode 703
23.4.15 Debug mode 704
23.5 LPTIM low-power modes 704
23.6 LPTIM interrupts 705
23.7 LPTIM registers 705
23.7.1 LPTIM interrupt and status register (LPTIM_ISR) 706
23.7.2 LPTIM interrupt clear register (LPTIM_ICR) 707
23.7.3 LPTIM interrupt enable register (LPTIM_IER) 707
23.7.4 LPTIM configuration register (LPTIM_CFGR) 708
23.7.5 LPTIM control register (LPTIM_CR) 711

23.7.6 LPTIM compare register (LPTIM_CMP) 713
23.7.7 LPTIM autoreload register (LPTIM_ARR) 713
23.7.8 LPTIM counter register (LPTIM_CNT) 714
23.7.9 LPTIM1 option register (LPTIM1_OR) 714
23.7.10 LPTIM2 option register (LPTIM2_OR) 715
23.7.11 LPTIM register map 716

24 Real-time clock (RTC) 717

24.1 Introduction 717
24.2 RTC main features 718
24.3 RTC functional description 719
24.3.1 RTC block diagram 719
24.3.2 Clock and prescalers 720
24.3.3 Real-time clock and calendar 720
24.3.4 Programmable alarms 721
24.3.5 Periodic auto-wake-up 721
24.3.6 RTC initialization and configuration 722
24.3.7 Reading the calendar 723
24.3.8 Resetting the RTC 724
24.3.9 RTC synchronization 725
24.3.10 RTC reference clock detection 725
24.3.11 RTC smooth digital calibration 726
24.3.12 Time-stamp function 728
24.3.13 Tamper detection 729
24.3.14 Calibration clock output 731
24.3.15 Alarm output 731
24.4 RTC low-power modes 732
24.5 RTC interrupts 732
24.6 RTC registers 733
24.6.1 RTC time register (RTC_TR) 733
24.6.2 RTC date register (RTC_DR) 734
24.6.3 RTC control register (RTC_CR) 735
24.6.4 RTC initialization and status register (RTC_ISR) 738
24.6.5 RTC prescaler register (RTC_PRER) 741
24.6.6 RTC wake-up timer register (RTC_WUTR) 742
24.6.7 RTC alarm A register (RTC_ALRMAR) 743

24.6.8 RTC alarm B register (RTC_ALRMBR) 744
24.6.9 RTC write protection register (RTC_WPR) 745
24.6.10 RTC sub second register (RTC_SSR) 745
24.6.11 RTC shift control register (RTC_SHIFTR) 746
24.6.12 RTC timestamp time register (RTC_TSTR) 747
24.6.13 RTC timestamp date register (RTC_TSDR) 748
24.6.14 RTC time-stamp sub second register (RTC_TSSSR) 749
24.6.15 RTC calibration register (RTC_CALR) 750
24.6.16 RTC tamper configuration register (RTC_TAMPCR) 751
24.6.17 RTC alarm A sub second register (RTC_ALRMASSR) 753
24.6.18 RTC alarm B sub second register (RTC_ALRMBSSR) 754
24.6.19 RTC option register (RTC_OR) 755
24.6.20 RTC backup registers (RTC_BKPxR) 755
24.6.21 RTC register map 756

25 Independent watchdog (IWDG) 758

25.1 Introduction 758
25.2 IWDG main features 758
25.3 IWDG functional description 758
25.3.1 IWDG block diagram 758
25.3.2 Window option 759
25.3.3 Hardware watchdog 760
25.3.4 Low-power freeze 760
25.3.5 Register access protection 760
25.3.6 Debug mode 760
25.4 IWDG registers 761
25.4.1 IWDG key register (IWDG_KR) 761
25.4.2 IWDG prescaler register (IWDG_PR) 762
25.4.3 IWDG reload register (IWDG_RLR) 763
25.4.4 IWDG status register (IWDG_SR) 764
25.4.5 IWDG window register (IWDG_WINR) 765
25.4.6 IWDG register map 766

26 System window watchdog (WWDG) 767

26.1 Introduction 767
26.2 WWDG main features 767

26.3 WWDG functional description 767
26.3.1 WWDG block diagram 768
26.3.2 WWDG internal signals 768
26.3.3 Enabling the watchdog 768
26.3.4 Controlling the down-counter 768
26.3.5 How to program the watchdog timeout 769
26.3.6 Debug mode 770
26.4 WWDG interrupts 770
26.5 WWDG registers 770
26.5.1 WWDG control register (WWDG_CR) 771
26.5.2 WWDG configuration register (WWDG_CFR) 771
26.5.3 WWDG status register (WWDG_SR) 772
26.5.4 WWDG register map 772

27 Inter-integrated circuit interface (I2C) 773
27.1 Introduction 773
27.2 I2C main features 773
27.3 I2C implementation 774
27.4 I2C functional description 774
27.4.1 I2C block diagram 775
27.4.2 I2C pins and internal signals 775
27.4.3 I2C clock requirements 776
27.4.4 I2C mode selection 776
27.4.5 I2C initialization 777
27.4.6 I2C reset 781
27.4.7 I2C data transfer 782
27.4.8 I2C target mode 784
27.4.9 I2C controller mode 793
27.4.10 I2C_TIMINGR register configuration examples 804
27.4.11 SMBus specific features 806
27.4.12 SMBus initialization 808
27.4.13 SMBus I2C_TIMEOUTR register configuration examples 810
27.4.14 SMBus target mode 811
27.4.15 SMBus controller mode 814
27.4.16 Wake-up from Stop mode on address match 817
27.4.17 Error conditions 818

27.5 I2C in low-power modes 820
27.6 I2C interrupts 820
27.7 I2C DMA requests 821
27.7.1 Transmission using DMA 821
27.7.2 Reception using DMA 821
27.8 I2C debug modes 821
27.9 I2C registers 822
27.9.1 I2C control register 1 (I2C_CR1) 822
27.9.2 I2C control register 2 (I2C_CR2) 824
27.9.3 I2C own address 1 register (I2C_OAR1) 826
27.9.4 I2C own address 2 register (I2C_OAR2) 827
27.9.5 I2C timing register (I2C_TIMINGR) 828
27.9.6 I2C timeout register (I2C_TIMEOUTR) 829
27.9.7 I2C interrupt and status register (I2C_ISR) 830
27.9.8 I2C interrupt clear register (I2C_ICR) 832
27.9.9 I2C PEC register (I2C_PECR) 833
27.9.10 I2C receive data register (I2C_RXDR) 833
27.9.11 I2C transmit data register (I2C_TXDR) 834
27.9.12 I2C register map 835

28 Universal synchronous/asynchronous receiver transmitter (USART/UART) 836
28.1 USART introduction 836
28.2 USART main features 837
28.3 USART extended features 838
28.4 USART implementation 838
28.5 USART functional description 839
28.5.1 USART block diagram 839
28.5.2 USART signals 840
28.5.3 USART character description 841
28.5.4 USART FIFOs and thresholds 843
28.5.5 USART transmitter 843
28.5.6 USART receiver 847
28.5.7 USART baud rate generation 854
28.5.8 Tolerance of the USART receiver to clock deviation 855
28.5.9 USART auto baud rate detection 857

28.5.10 USART multiprocessor communication 859
28.5.11 USART Modbus communication 861
28.5.12 USART parity control 862
28.5.13 USART LIN (local interconnection network) mode 863
28.5.14 USART synchronous mode 865
28.5.15 USART single-wire half-duplex communication 869
28.5.16 USART receiver timeout 869
28.5.17 USART smartcard mode 870
28.5.18 USART IrDA SIR ENDEC block 874
28.5.19 Continuous communication using USART and DMA 877
28.5.20 RS232 hardware flow control and RS485 Driver Enable 879
28.5.21 USART low-power management 882
28.6 USART in low-power modes 885
28.7 USART interrupts 886
28.8 USART registers 887
28.8.1 USART control register 1 (USART_CR1) 887
28.8.2 USART control register 1 [alternate] (USART_CR1) 890
28.8.3 USART control register 2 (USART_CR2) 894
28.8.4 USART control register 3 (USART_CR3) 898
28.8.5 USART baud rate register (USART_BRR) 902
28.8.6 USART guard time and prescaler register (USART_GTPR) 902
28.8.7 USART receiver timeout register (USART_RTOR) 903
28.8.8 USART request register (USART_RQR) 904
28.8.9 USART interrupt and status register (USART_ISR) 905
28.8.10 USART interrupt and status register [alternate] (USART_ISR) 911
28.8.11 USART interrupt flag clear register (USART_ICR) 916
28.8.12 USART receive data register (USART_RDR) 918
28.8.13 USART transmit data register (USART_TDR) 918
28.8.14 USART prescaler register (USART_PRESC) 919
28.8.15 USART register map 920

29 Low-power universal asynchronous receiver transmitter (LPUART) 922
29.1 LPUART introduction 922
29.2 LPUART main features 923
29.3 LPUART implementation 924

29.4 LPUART functional description 925
29.4.1 LPUART block diagram 925
29.4.2 LPUART signals 926
29.4.3 LPUART character description 927
29.4.4 LPUART FIFOs and thresholds 928
29.4.5 LPUART transmitter 929
29.4.6 LPUART receiver 932
29.4.7 LPUART baud rate generation 936
29.4.8 Tolerance of the LPUART receiver to clock deviation 937
29.4.9 LPUART multiprocessor communication 938
29.4.10 LPUART parity control 940
29.4.11 LPUART single-wire half-duplex communication 941
29.4.12 Continuous communication using DMA and LPUART 941
29.4.13 RS232 hardware flow control and RS485 Driver Enable 944
29.4.14 LPUART low-power management 946
29.5 LPUART in low-power modes 949
29.6 LPUART interrupts 950
29.7 LPUART registers 951
29.7.1 LPUART control register 1 (LPUART_CR1) 951
29.7.2 LPUART control register 1 [alternate] (LPUART_CR1) 954
29.7.3 LPUART control register 2 (LPUART_CR2) 957
29.7.4 LPUART control register 3 (LPUART_CR3) 959
29.7.5 LPUART baud rate register (LPUART_BRR) 962
29.7.6 LPUART request register (LPUART_RQR) 962
29.7.7 LPUART interrupt and status register (LPUART_ISR) 963
29.7.8 LPUART interrupt and status register [alternate] (LPUART_ISR) 967
29.7.9 LPUART interrupt flag clear register (LPUART_ICR) 970
29.7.10 LPUART receive data register (LPUART_RDR) 971
29.7.11 LPUART transmit data register (LPUART_TDR) 971
29.7.12 LPUART prescaler register (LPUART_PRESC) 972
29.7.13 LPUART register map 973

30 Serial peripheral interface (SPI) 975
30.1 Introduction 975
30.2 SPI main features 975
30.3 SPI implementation 976

30.4 SPI functional description 976
30.4.1 General description 976
30.4.2 Communications between one master and one slave 977
30.4.3 Standard multislave communication 979
30.4.4 Multimaster communication 980
30.4.5 Slave select (NSS) pin management 981
30.4.6 Communication formats 982
30.4.7 Configuration of SPI 984
30.4.8 Procedure for enabling SPI 985
30.4.9 Data transmission and reception procedures 985
30.4.10 SPI status flags 995
30.4.11 SPI error flags 996
30.4.12 NSS pulse mode 997
30.4.13 TI mode 997
30.4.14 CRC calculation 998
30.5 SPI interrupts 1000
30.6 SPI registers 1001
30.6.1 SPI control register 1 (SPIx_CR1) 1001
30.6.2 SPI control register 2 (SPIx_CR2) 1003
30.6.3 SPI status register (SPIx_SR) 1005
30.6.4 SPI data register (SPIx_DR) 1006
30.6.5 SPI CRC polynomial register (SPIx_CRCPR) 1007
30.6.6 SPI Rx CRC register (SPIx_RXCRCR) 1007
30.6.7 SPI Tx CRC register (SPIx_TXCRCR) 1007
30.6.8 SPI register map 1009

31 Inter-processor communication controller (IPCC) 1010
31.1 Introduction 1010
31.2 IPCC main features 1010
31.3 IPCC functional description 1010
31.3.1 IPCC block diagram 1011
31.3.2 IPCC Simplex channel mode 1011
31.3.3 IPCC Half-duplex channel mode 1014
31.3.4 IPCC interrupts 1017
31.4 IPCC registers 1018
31.4.1 IPCC processor 1 control register (IPCC_C1CR) 1018

31.4.2 IPCC processor 1 mask register (IPCC_C1MR) 1018
31.4.3 IPCC processor 1 status set clear register (IPCC_C1SCR) 1019
31.4.4 IPCC processor 1 to processor 2 status register (IPCC_C1TOC2SR) 1019
31.4.5 IPCC processor 2 control register (IPCC_C2CR) 1020
31.4.6 IPCC processor 2 mask register (IPCC_C2MR) 1020
31.4.7 IPCC processor 2 status set clear register (IPCC_C2SCR) 1021
31.4.8 IPCC processor 2 to processor 1 status register (IPCC_C2TOC1SR) 1022
31.4.9 IPCC register map 1023

32 Hardware semaphore (HSEM) 1024
32.1 Introduction 1024
32.2 Main features 1024
32.3 Functional description 1025
32.3.1 HSEM block diagram 1025
32.3.2 HSEM internal signals 1025
32.3.3 HSEM lock procedures 1025
32.3.4 HSEM write/read/read lock register address 1027
32.3.5 HSEM unlock procedures 1027
32.3.6 HSEM COREID semaphore clear 1028
32.3.7 HSEM interrupts 1028
32.3.8 AHB bus master ID verification 1030
32.4 HSEM registers 1031
32.4.1 HSEM register semaphore x (HSEM_Rx) 1031
32.4.2 HSEM read lock register semaphore x (HSEM_RLRx) 1032
32.4.3 HSEM interrupt enable register (HSEM_CnIER) 1033
32.4.4 HSEM interrupt clear register (HSEM_CnICR) 1033
32.4.5 HSEM interrupt status register (HSEM_CnISR) 1033
32.4.6 HSEM interrupt status register (HSEM_CnMISR) 1034
32.4.7 HSEM clear register (HSEM_CR) 1034
32.4.8 HSEM clear semaphore key register (HSEM_KEYR) 1035
32.4.9 HSEM register map 1036

33 Debug support (DBG) 1038
33.1 Introduction 1038
33.2 Debug use cases 1038

33.3 DBG functional description 1040
33.3.1 DBG block diagram 1040
33.3.2 DBG pins and internal signals 1040
33.3.3 DBG power domains 1041
33.3.4 DBG clocks 1041
33.3.5 Debug and low power modes 1042
33.3.6 DBG reset 1042
33.4 Serial wire and JTAG debug port (SWJ-DP) 1042
33.4.1 JTAG debug port 1042
33.4.2 SW debug port 1045
33.4.3 Debug port registers 1046
33.4.4 DP debug port identification register (DP_DPIDR) 1047
33.4.5 DP abort register (DP_ABORTR) 1047
33.4.6 DP control and status register (DP_CTRL/STATR) 1048
33.4.7 DP data link control register (DP_DLCR) 1050
33.4.8 DP target identification register (DP_TARGETIDR) 1050
33.4.9 DP data link protocol identification register (DP_DLPIDR) 1051
33.4.10 DP resend register (DP_RESENDR) 1051
33.4.11 DP access port select register (DP_SELECTR) 1052
33.4.12 DP read buffer register (DP_BUFFR) 1052
33.4.13 DP target selection register (DP_TARGETSELR) 1053
33.4.14 Debug port register map and reset values 1054
33.5 Access ports 1055
33.5.1 AP control/status word register (AP_CSWR) 1057
33.5.2 AP transfer address register (AP_TAR) 1058
33.5.3 AP data read/write register (AP_DRWR) 1058
33.5.4 AP banked data registers (AP_BD0-3R) 1058
33.5.5 AP base address register (AP_BASER) 1059
33.5.6 AP identification register (AP_IDR) 1059
33.5.7 Access port register map and reset values 1061
33.6 Cross trigger interface (CTI) and matrix (CTM) 1062
33.7 Cross trigger interface registers 1066
33.7.1 CTI control register (CTI_CONTROLR) 1066
33.7.2 CTI trigger acknowledge register (CTI_INTACKR) 1066
33.7.3 CTI application trigger set register (CTI_APPSETR) 1066
33.7.4 CTI application trigger clear register (CTI_APPCLEAR) 1067

33.7.5 CTI application pulse register (CTI_APPPULSER) 1068
33.7.6 CTI trigger In x enable register (CTI_INENRx) 1068
33.7.7 CTI trigger out x enable register (CTI_OUTENRx) 1069
33.7.8 CTI trigger in status register (CTI_TRGISTSR) 1069
33.7.9 CTI trigger out status register (CTI_TRGOSTSR) 1070
33.7.10 CTI channel in status register (CTI_CHINSTSR) 1070
33.7.11 CTI channel out status register (CTI_CHOUTSTSR) 1070
33.7.12 CTI channel gate register (CTI_GATER) 1071
33.7.13 CTI claim tag set register (CTI_CLAIMSETR) 1071
33.7.14 CTI claim tag clear register (CTI_CLAIMCLR) 1072
33.7.15 CTI lock access register (CTI_LAR) 1072
33.7.16 CTI lock status register (CTI_LSR) 1073
33.7.17 CTI authentication status register (CTI_AUTHSTATR) 1073
33.7.18 CTI device configuration register (CTI_DEVIDR) 1074
33.7.19 CTI device type identifier register (CTI_DEVTYPER) 1074
33.7.20 CTI CoreSight peripheral identity register 4 (CTI_PIDR4) 1075
33.7.21 CTI CoreSight peripheral identity register 0 (CTI_PIDR0) 1075
33.7.22 CTI CoreSight peripheral identity register 1 (CTI_PIDR1) 1075
33.7.23 CTI CoreSight peripheral identity register 2 (CTI_PIDR2) 1076
33.7.24 CTI CoreSight peripheral identity register 3 (CTI_PIDR3) 1076
33.7.25 CTI CoreSight component identity register 0 (CTI_CIDR0) 1077
33.7.26 CTI CoreSight peripheral identity register 1 (CTI_CIDR1) 1077
33.7.27 CTI CoreSight component identity register 2 (CTI_CIDR2) 1078
33.7.28 CTI CoreSight component identity register 3 (CTI_CIDR3) 1078
33.7.29 CTI register map and reset values 1079
33.8 Microcontroller debug unit (DBGMCU) 1082
33.8.1 DBGMCU identity code register (DBGMCU_IDCODE) 1082
33.8.2 DBGMCU configuration register (DBGMCU_CR) 1082
33.8.3 DBGMCU CPU1 APB1 peripheral freeze register 1 (DBGMCU_APB1FZR1) 1083
33.8.4 DBGMCU CPU2 APB1 peripheral freeze register 1 (DBGMCU_C2APB1FZR1) 1084
33.8.5 DBGMCU CPU1 APB1 peripheral freeze register 2 (DBGMCU_APB1FZR2) 1085
33.8.6 DBGMCU CPU2 APB1 peripheral freeze register 2 (DBGMCU_C2APB1FZR2) 1086
33.8.7 DBGMCU CPU1 APB2 peripheral freeze register (DBGMCU_APB2FZR) 1086

33.8.8 DBGMCU CPU2 APB2 peripheral freeze register (DBGMCU_C2APB2FZR) 1087
33.8.9 DBGMCU register map and reset values 1088
33.9 CPU2 ROM tables 1090
33.9.1 CPU2 ROM1 memory type register (C2ROM1_MEMTYPER) 1092
33.9.2 CPU2 ROM1 CoreSight peripheral identity register 4 (C2ROM1_PIDR4) 1092
33.9.3 CPU2 ROM1 CoreSight peripheral identity register 0 (C2ROM1_PIDR0) 1092
33.9.4 CPU2 ROM1 CoreSight peripheral identity register 1 (C2ROM1_PIDR1) 1093
33.9.5 CPU2 ROM1 CoreSight peripheral identity register 2 (C2ROM1_PIDR2) 1093
33.9.6 CPU2 ROM1 CoreSight peripheral identity register 3 (C2ROM1_PIDR3) 1094
33.9.7 CPU2 ROM1 CoreSight component identity register 0 (C2ROM1_CIDR0) 1094
33.9.8 CPU2 ROM1 CoreSight peripheral identity register 1 (C2ROM1_CIDR1) 1095
33.9.9 CPU2 ROM1 CoreSight component identity register 2 (C2ROM1_CIDR2) 1095
33.9.10 CPU2 ROM1 CoreSight component identity register 3 (C2ROM1_CIDR3) 1095
33.9.11 CPU2 processor ROM table registers and reset values 1097
33.9.12 CPU2 ROM2 memory type register (C2ROM2_MEMTYPER) 1098
33.9.13 CPU2 ROM2 CoreSight peripheral identity register 4 (C2ROM2_PIDR4) 1098
33.9.14 CPU2 ROM2 CoreSight peripheral identity register 0 (C2ROM2_PIDR0) 1098
33.9.15 CPU2 ROM2 CoreSight peripheral identity register 1 (C2ROM2_PIDR1) 1099
33.9.16 CPU2 ROM2 CoreSight peripheral identity register 2 (C2ROM2_PIDR2) 1099
33.9.17 CPU2 ROM2 CoreSight peripheral identity register 3 (C2ROM2_PIDR3) 1100
33.9.18 CPU2 ROM2 CoreSight component identity register 0 (C2ROM2_CIDR0) 1100
33.9.19 CPU2 ROM2 CoreSight peripheral identity register 1 (C2ROM2_CIDR1) 1101
33.9.20 CPU2 ROM2 CoreSight component identity register 2 (C2ROM2_CIDR2) 1101

33.9.21 CPU2 ROM2 CoreSight component identity register 3 (C2ROM2_CIDR3) 1101
33.9.22 CPU2 ROM table register map and reset values 1103
33.10 CPU2 data watchpoint and trace unit (DWT) 1104
33.10.1 DWT control register (DWT_CTRLR) 1104
33.10.2 DWT cycle count register (DWT_CYCCNTR) 1106
33.10.3 DWT CPI count register (DWT_CPICNTR) 1106
33.10.4 DWT exception count register (DWT_EXCCNTR) 1107
33.10.5 DWT sleep count register (DWT_SLPCNTR) 1107
33.10.6 DWT LSU count register (DWT_LSUCNTR) 1108
33.10.7 DWT fold count register (DWT_FOLDCNTR) 1108
33.10.8 DWT program counter sample register (DWT_PCSR) 1108
33.10.9 DWT comparator register x (DWT_COMPxR) 1109
33.10.10 DWT mask register x (DWT_MASKxR) 1109
33.10.11 DWT function register x (DWT_FUNCTxR) 1109
33.10.12 DWT CoreSight peripheral identity register 4 (DWT_PIDR4) 1110
33.10.13 DWT CoreSight peripheral identity register 0 (DWT_PIDR0) 1111
33.10.14 DWT CoreSight peripheral identity register 1 (DWT_PIDR1) 1111
33.10.15 DWT CoreSight peripheral identity register 2 (DWT_PIDR2) 1112
33.10.16 DWT CoreSight peripheral identity register 3 (DWT_PIDR3) 1112
33.10.17 DWT CoreSight component identity register 0 (DWT_CIDR0) 1113
33.10.18 DWT CoreSight peripheral identity register 1 (DWT_CIDR1) 1113
33.10.19 DWT CoreSight component identity register 2 (DWT_CIDR2) 1113
33.10.20 DWT CoreSight component identity register 3 (DWT_CIDR3) 1114
33.10.21 CPU2 DWT registers 1115
33.11 CPU2 breakpoint unit (PBU) 1118
33.11.1 BPU control register (BPU_CTRLR) 1118
33.11.2 BPU remap register (BPU_REMAPR) 1118
33.11.3 BPU comparator registers (BPU_COMPxR) 1119
33.11.4 BPU CoreSight peripheral identity register 4 (BPU_PIDR4) 1119
33.11.5 BPU CoreSight peripheral identity register 0 (BPU_PIDR0) 1120
33.11.6 BPU CoreSight peripheral identity register 1 (BPU_PIDR1) 1120
33.11.7 BPU CoreSight peripheral identity register 2 (BPU_PIDR2) 1120
33.11.8 BPU CoreSight peripheral identity register 3 (BPU_PIDR3) 1121
33.11.9 BPU CoreSight component identity register 0 (BPU_CIDR0) 1121
33.11.10 BPU CoreSight peripheral identity register 1 (BPU_CIDR1) 1122
33.11.11 BPU CoreSight component identity register 2 (BPU_CIDR2) 1122

33.11.12 BPU CoreSight component identity register 3 (BPU_CIDR3) 1123
33.11.13 CPU2 BPU register map and reset values 1124
33.12 CPU2 cross trigger interface (CTI) 1125
33.13 CPU1 ROM table 1125
33.13.1 CPU1 ROM memory type register (C1ROM_MEMTYPER) 1126
33.13.2 CPU1 ROM CoreSight peripheral identity register 4 (C1ROM_PIDR4) 1127
33.13.3 CPU1 ROM CoreSight peripheral identity register 0 (C1ROM_PIDR0) 1127
33.13.4 CPU1 ROM CoreSight peripheral identity register 1 (C1ROM_PIDR1) 1128
33.13.5 CPU1 ROM CoreSight peripheral identity register 2 (C1ROM_PIDR2) 1128
33.13.6 CPU1 ROM CoreSight peripheral identity register 3 (C1ROM_PIDR3) 1129
33.13.7 CPU1 ROM CoreSight component identity register 0 (C1ROM_CIDR0) 1129
33.13.8 CPU1 ROM CoreSight peripheral identity register 1 (C1ROM_CIDR1) 1129
33.13.9 CPU1 ROM CoreSight component identity register 2 (C1ROM_CIDR2) 1130
33.13.10 CPU1 ROM CoreSight component identity register 3 (C1ROM_CIDR3) 1130
33.13.11 CPU1 ROM table register map and reset values 1132
33.14 CPU1 data watchpoint and trace unit (DWT) 1133
33.14.1 DWT control register (DWT_CTRLR) 1133
33.14.2 DWT cycle count register (DWT_CYCCNTR) 1135
33.14.3 DWT CPI count register (DWT_CPICNTR) 1135
33.14.4 DWT exception count register (DWT_EXCCNTR) 1136
33.14.5 DWT sleep count register (DWT_SLPCNTR) 1136
33.14.6 DWT LSU count register (DWT_LSUCNTR) 1137
33.14.7 DWT fold count register (DWT_FOLDCNTR) 1137
33.14.8 DWT program counter sample register (DWT_PCSR) 1137
33.14.9 DWT comparator register x (DWT_COMPxR) 1138
33.14.10 DWT mask register x (DWT_MASKxR) 1138
33.14.11 DWT function register x (DWT_FUNCTxR) 1138
33.14.12 DWT CoreSight peripheral identity register 4 (DWT_PIDR4) 1139
33.14.13 DWT CoreSight peripheral identity register 0 (DWT_PIDR0) 1140
33.14.14 DWT CoreSight peripheral identity register 1 (DWT_PIDR1) 1140

33.14.15 DWT CoreSight peripheral identity register 2 (DWT_PIDR2) 1141
33.14.16 DWT CoreSight peripheral identity register 3 (DWT_PIDR3) 1141
33.14.17 DWT CoreSight component identity register 0 (DWT_CIDR0) 1142
33.14.18 DWT CoreSight peripheral identity register 1 (DWT_CIDR1) 1142
33.14.19 DWT CoreSight component identity register 2 (DWT_CIDR2) 1142
33.14.20 DWT CoreSight component identity register 3 (DWT_CIDR3) 1143
33.14.21 CPU1 DWT register map and reset values 1144
33.15 CPU1 instrumentation trace macrocell (ITM) 1146
33.15.1 ITM stimulus register x (ITM_STIMRx) 1146
33.15.2 ITM trace enable register (ITM_TER) 1146
33.15.3 ITM trace privilege register (ITM_TPR) 1147
33.15.4 ITM trace control register (ITM_TCR) 1147
33.15.5 ITM CoreSight peripheral identity register 4 (ITM_PIDR4) 1148
33.15.6 ITM CoreSight peripheral identity register 0 (ITM_PIDR0) 1149
33.15.7 ITM CoreSight peripheral identity register 1 (ITM_PIDR1) 1149
33.15.8 ITM CoreSight peripheral identity register 2 (ITM_PIDR2) 1150
33.15.9 ITM CoreSight peripheral identity register 3 (ITM_PIDR3) 1150
33.15.10 ITM CoreSight component identity register 0 (ITM_CIDR0) 1151
33.15.11 ITM CoreSight peripheral identity register 1 (ITM_CIDR1) 1151
33.15.12 ITM CoreSight component identity register 2 (ITM_CIDR2) 1151
33.15.13 ITM CoreSight component identity register 3 (ITM_CIDR3) 1152
33.15.14 ITM register map and reset values 1153
33.16 CPU1 breakpoint unit (FPB) 1154
33.16.1 FPB control register (FPB_CTRLR) 1154
33.16.2 FPB remap register (FPB_REMAPR) 1154
33.16.3 FPB comparator registers (FPB_COMPxR) 1155
33.16.4 FPB CoreSight peripheral identity register 4 (FPB_PIDR4) 1155
33.16.5 FPB CoreSight peripheral identity register 0 (FPB_PIDR0) 1156
33.16.6 FPB CoreSight peripheral identity register 1 (FPB_PIDR1) 1156
33.16.7 FPB CoreSight peripheral identity register 2 (FPB_PIDR2) 1157
33.16.8 FPB CoreSight peripheral identity register 3 (FPB_PIDR3) 1157
33.16.9 FPB CoreSight component identity register 0 (FPB_CIDR0) 1158
33.16.10 FPB CoreSight peripheral identity register 1 (FPB_CIDR1) 1158
33.16.11 FPB CoreSight component identity register 2 (FPB_CIDR2) 1158
33.16.12 FPB CoreSight component identity register 3 (FPB_CIDR3) 1159
33.16.13 FPB register map and reset values 1160
33.17 CPU1 trace port interface unit (TPIU) 1161

33.17.1 TPIU supported port size register (TPIU_SSPSR) 1161
33.17.2 TPIU current port size register (TPIU_CSPSR) 1161
33.17.3 TPIU asynchronous clock presecaler register (TPIU_ACPR) 1162
33.17.4 TPIU selected pin protocol register (TPIU_SPPR) 1162
33.17.5 TPIU formatter and flush status register (TPIU_FFSR) 1163
33.17.6 TPIU formatter and flush control register (TPIU_FFCR) 1163
33.17.7 TPIU formatter synchronization counter register (TPIU_FSCR) 1164
33.17.8 TPIU claim tag set register (TPIU_CLAIMSETR) 1164
33.17.9 TPIU claim tag clear register (TPIU_CLAIMCLR) 1165
33.17.10 TPIU device configuration register (TPIU_DEVIDR) 1165
33.17.11 TPIU device type identifier register (TPIU_DEVTYPER) 1166
33.17.12 TPIU CoreSight peripheral identity register 4 (TPIU_PIDR4) 1166
33.17.13 TPIU CoreSight peripheral identity register 0 (TPIU_PIDR0) 1167
33.17.14 TPIU CoreSight peripheral identity register 1 (TPIU_PIDR1) 1167
33.17.15 TPIU CoreSight peripheral identity register 2 (TPIU_PIDR2) 1167
33.17.16 TPIU CoreSight peripheral identity register 3 (TPIU_PIDR3) 1168
33.17.17 TPIU CoreSight component identity register 0 (TPIU_CIDR0) 1168
33.17.18 TPIU CoreSight peripheral identity register 1 (TPIU_CIDR1) 1169
33.17.19 TPIU CoreSight component identity register 2 (TPIU_CIDR2) 1169
33.17.20 TPIU CoreSight component identity register 3 (TPIU_CIDR3) 1170
33.17.21 CPU1 TPIU register map and reset values 1171
33.18 CPU1 cross trigger interface (CTI) 1173
33.19 References 1173

34 Device electronic signature 1174
34.1 Unique device ID register (96 bits) 1174
34.2 Memory size data register 1175
34.2.1 Flash size data register 1175
34.3 Package data register 1175
34.4 Part number codification register 1176

35 Important security notice 1177

36 Revision history 1178

List of tables

Table 1. Memory map and peripheral register boundary addresses . . . 57
Table 2. Boot modes . . . 61
Table 3. Flash memory - Single bank organization . . . 65
Table 4. Number of wait states vs, flash memory clock (HCLK4) frequency . . . 67
Table 5. Page erase overview . . . 72
Table 6. Mass erase overview . . . 73
Table 7. Errors in page-based row programming . . . 78
Table 8. Option bytes format . . . 79
Table 9. Option bytes organization . . . 79
Table 10. Option loading control . . . 88
Table 11. UID64 organization . . . 89
Table 12. Flash memory read protection status . . . 90
Table 13. RDP regression from Level 1 to Level 0 and memory erase . . . 92
Table 14. Access status vs. protection level and execution modes . . . 93
Table 17. Flash memory interrupt requests . . . 98
Table 18. Flash interface register map and reset values . . . 118
Table 19. CRC internal input/output signals . . . 123
Table 20. CRC register map and reset values . . . 128
Table 21. Supply configuration control . . . 131
Table 22. PVM features . . . 136
Table 23. Sub-system low power wake-up sources . . . 140
Table 24. Low-power mode summary . . . 142
Table 25. Functionalities depending on system operating mode . . . 143
Table 26. Low-power run . . . 146
Table 27. CPU CSTOP wake-up vs. system operating mode . . . 147
Table 28. Sleep mode . . . 148
Table 29. Low-power sleep . . . 149
Table 30. Stop0 mode . . . 151
Table 31. Stop1 mode . . . 152
Table 32. Standby mode . . . 154
Table 33. Shutdown mode . . . 155
Table 34. PWR register map and reset values . . . 173
Table 35. STM32WB15CC peripherals interconnect matrix . . . 175
Table 36. Maximum clock source frequency . . . 192
Table 37. SMPS step-down converter clock source selection and division . . . 193
Table 38. Peripheral clock enable . . . 196
Table 39. Single core Low power debug configurations . . . 197
Table 40. RCC register map and reset values . . . 249
Table 41. Port bit configuration table . . . 257
Table 42. GPIO register map and reset values . . . 272
Table 43. SYSCFG register map and reset values . . . 290
Table 44. DMA implementation . . . 293
Table 45. DMA internal input/output signals . . . 294
Table 46. Programmable data width and endian behavior (when PINC = MINC = 1) . . . 299
Table 47. DMA interrupt requests . . . 301
Table 48. DMA register map and reset values . . . 309
Table 49. DMAMUX instantiation . . . 313
Table 50. DMAMUX: assignment of multiplexer inputs to resources . . . 314

Table 51. DMAMUX: assignment of trigger inputs to resources . . . 314
Table 52. DMAMUX: assignment of synchronization inputs to resources . . . 315
Table 53. DMAMUX signals . . . 317
Table 54. DMAMUX interrupts . . . 321
Table 55. DMAMUX register map and reset values . . . 326
Table 56. CPU1 vector table . . . 330
Table 57. CPU2 vector table . . . 333
Table 58. Wakeup interrupt table . . . 335
Table 59. EXTI pin overview . . . 338
Table 60. EVG pin overview . . . 338
Table 61. EXTI event input configurations and register control . . . 340
Table 62. Masking functionality . . . 343
Table 63. EXTI register map sections . . . 344
Table 64. EXTI register map and reset values . . . 353
Table 65. ADC input/output pins . . . 357
Table 66. ADC internal input/output signals . . . 358
Table 67. External triggers . . . 358
Table 68. Latency between trigger and start of conversion . . . 363
Table 69. Configuring the trigger polarity . . . 370
Table 70. tSAR timings depending on resolution . . . 372
Table 71. Analog watchdog comparison . . . 381
Table 72. Analog watchdog channel selection . . . 382
Table 73. ADC interrupts . . . 388
Table 74. ADC register map and reset values . . . 403
Table 75. COMP1 input plus assignment . . . 407
Table 76. COMP1 input minus assignment . . . 408
Table 77. Comparator behavior in the low power modes . . . 411
Table 78. Interrupt control bits . . . 411
Table 79. COMP register map and reset values . . . 415
Table 80. Acquisition sequence summary . . . 419
Table 81. Spread spectrum deviation versus AHB clock frequency . . . 421
Table 82. I/O state depending on its mode and IODEF bit value . . . 422
Table 83. Effect of low-power modes on TSC . . . 424
Table 84. Interrupt control bits . . . 424
Table 85. TSC register map and reset values . . . 432
Table 86. RNG internal input/output signals . . . 435
Table 87. RNG interrupt requests . . . 441
Table 88. RNG configurations . . . 442
Table 89. RNG register map and reset map . . . 445
Table 90. AES internal input/output signals . . . 447
Table 91. CTR mode initialization vector definition . . . 464
Table 92. GCM last block definition . . . 466
Table 93. Initialization of AES_IVRx registers in GCM mode . . . 467
Table 94. Initialization of AES_IVRx registers in CCM mode . . . 474
Table 95. Key endianness in AES_KEYRx registers (128- or 256-bit key length) . . . 479
Table 96. AES interrupt requests . . . 482
Table 97. Processing latency for ECB, CBC and CTR . . . 482
Table 98. Processing latency for GCM and CCM (in clock cycles) . . . 483
Table 99. AES register map and reset values . . . 493
Table 100. Internal input/output signals . . . 496
Table 101. PKA integer arithmetic functions list . . . 497
Table 102. PKA prime field (Fp) elliptic curve functions list . . . 497

Table 103. Montgomery parameter computation . . . 502
Table 104. Modular addition . . . 503
Table 105. Modular subtraction . . . 503
Table 106. Montgomery multiplication . . . 504
Table 107. Modular exponentiation (normal mode) . . . 505
Table 108. Modular exponentiation (fast mode) . . . 505
Table 109. Modular inversion . . . 505
Table 110. Modular reduction . . . 506
Table 111. Arithmetic addition . . . 506
Table 112. Arithmetic subtraction . . . 506
Table 113. Arithmetic multiplication . . . 507
Table 114. Arithmetic comparison . . . 507
Table 115. CRT exponentiation . . . 508
Table 116. Point on elliptic curve Fp check . . . 509
Table 117. ECC Fp scalar multiplication . . . 509
Table 118. ECC Fp scalar multiplication (Fast Mode) . . . 510
Table 119. ECDSA sign - Inputs . . . 511
Table 120. ECDSA sign - Outputs . . . 511
Table 121. Extended ECDSA sign (extra outputs) . . . 512
Table 122. ECDSA verification (inputs) . . . 512
Table 123. ECDSA verification (outputs) . . . 512
Table 124. Family of supported curves for ECC operations . . . 513
Table 125. Modular exponentiation computation times . . . 515
Table 126. ECC scalar multiplication computation times . . . 515
Table 127. ECDSA signature average computation times . . . 515
Table 128. ECDSA verification average computation times . . . 516
Table 129. Point on elliptic curve Fp check average computation times . . . 516
Table 130. Montgomery parameters average computation times . . . 516
Table 131. PKA interrupt requests . . . 516
Table 132. PKA register map and reset values . . . 520
Table 133. Behavior of timer outputs versus BRK/BRK2 inputs . . . 563
Table 134. Break protection disarming conditions . . . 565
Table 135. Counting direction versus encoder signals . . . 571
Table 136. TIM1 internal trigger connection . . . 588
Table 137. Output control bits for complementary OCx and OCxN channels with break feature . . . 602
Table 138. TIM1 register map and reset values . . . 618
Table 139. Counting direction versus encoder signals . . . 654
Table 140. TIM2 internal trigger connection . . . 672
Table 141. Output control bit for standard OCx channels . . . 683
Table 142. TIM2 register map and reset values . . . 690
Table 143. LPTIM features . . . 694
Table 144. LPTIM1 external trigger connection . . . 695
Table 145. LPTIM2 external trigger connection . . . 695
Table 146. Prescaler division ratios . . . 697
Table 147. Encoder counting scenarios . . . 703
Table 148. Effect of low-power modes on the LPTIM . . . 704
Table 149. Interrupt events . . . 705
Table 150. LPTIM register map and reset values . . . 716
Table 151. Effect of low-power modes on RTC . . . 732
Table 152. Interrupt control bits . . . 732
Table 153. RTC register map and reset values . . . 756
Table 154. IWDG register map and reset values . . . 766

Table 155. WWDG internal input/output signals . . . 768
Table 156. WWDG register map and reset values . . . 772
Table 157. I2C implementation . . . 774
Table 158. I2C input/output pins . . . 775
Table 159. I2C internal input/output signals . . . 776
Table 160. Comparison of analog and digital filters . . . 778
Table 161. I²C-bus and SMBus specification data setup and hold times . . . 780
Table 162. I2C configuration . . . 784
Table 163. I²C-bus and SMBus specification clock timings . . . 795
Table 164. Timing settings for f_{I2CCLK} of 8 MHz . . . 805
Table 165. Timing settings for f_{I2CCLK} of 16 MHz . . . 805
Table 166. SMBus timeout specifications . . . 807
Table 167. SMBus with PEC configuration . . . 809
Table 168. TIMEOUTA[11:0] for maximum $t_{TIMEOUT}$ of 25 ms . . . 810
Table 169. TIMEOUTB[11:0] for maximum $t_{LOW:SEXT}$ and $t_{LOW:MEXT}$ of 8 ms . . . 810
Table 170. TIMEOUTA[11:0] for maximum t_{IDLE} of 50 µs . . . 810
Table 171. Effect of low-power modes to I2C . . . 820
Table 172. I2C interrupt requests . . . 820
Table 173. I2C register map and reset values . . . 835
Table 174. USART / LPUART features . . . 838
Table 175. USART/UART input/output pins . . . 841
Table 176. USART internal input/output signals . . . 841
Table 177. Noise detection from sampled data . . . 853
Table 178. Tolerance of the USART receiver when BRR [3:0] = 0000 . . . 856
Table 179. Tolerance of the USART receiver when BRR[3:0] is different from 0000 . . . 857
Table 180. USART frame formats . . . 862
Table 181. Effect of low-power modes on the USART . . . 885
Table 182. USART interrupt requests . . . 886
Table 183. USART register map and reset values . . . 920
Table 184. USART / LPUART features . . . 924
Table 185. LPUART input/output pins . . . 926
Table 186. LPUART internal input/output signals . . . 926
Table 187. Error calculation for programmed baud rates at lpuart_ker_ck_pres = 32.768 kHz . . . 936
Table 188. Error calculation for programmed baud rates at fCK = 100 MHz . . . 937
Table 189. Tolerance of the LPUART receiver . . . 938
Table 191. Effect of low-power modes on the LPUART . . . 949
Table 192. LPUART interrupt requests . . . 950
Table 193. LPUART register map and reset values . . . 973
Table 194. STM32WB15CC SPI implementation . . . 976
Table 195. SPI interrupt requests . . . 1000
Table 196. SPI register map and reset values . . . 1009
Table 197. IPCC interface signals . . . 1011
Table 198. Bits used for the communication . . . 1012
Table 199. IPCC register map and reset values . . . 1023
Table 200. HSEM internal input/output signals . . . 1025
Table 201. Authorized AHB bus master IDs . . . 1030
Table 202. HSEM register map and reset values . . . 1036
Table 203. JTAG/Serial-wire debug port pins . . . 1040
Table 204. Trace port pins . . . 1041
Table 205. Single Wire Trace port pins . . . 1041
Table 206. Trigger pins . . . 1041
Table 207. JTAG-DP data registers . . . 1044

Table 208. Packet request 1045
Table 209. ACK response. 1046
Table 210. Data transfer. 1046
Table 211. Debug port register map and reset values 1054
Table 212. Access port register map and reset values. 1061
Table 213. CPU2 CTI inputs. 1062
Table 214. CPU2 CTI outputs. 1063
Table 215. CPU1 CTI inputs. 1063
Table 216. CPU1 CTI outputs. 1063
Table 217. CTI register map and reset values 1079
Table 218. DBGMCU register map and reset values 1088
Table 219. CPU2 processor ROM table 1090
Table 220. CPU2 ROM table 1090
Table 221. CPU2 processor ROM table register map and reset values. 1097
Table 222. CPU2 ROM table register map and reset values 1103
Table 223. CPU2 DWT register map and reset values. 1115
Table 224. CPU2 BPU register map and reset values 1124
Table 225. CPU1 ROM table 1125
Table 226. CPU1 ROM table register map and reset values 1132
Table 227. CPU1 DWT register map and reset values. 1144
Table 228. CPU1 ITM register map and reset values. 1153
Table 229. CPU1 FPB register map and reset values 1160
Table 230. CPU1 TPIU register map and reset values. 1171
Table 231. Document revision history 1178

List of figures

Figure 1. System architecture . . . 53
Figure 2. Memory map . . . 56
Figure 3. Sequential 16-bit instructions execution . . . 69
Figure 4. Changing the Read protection (RDP) level . . . 93
Figure 5. Radio system block diagram . . . 121
Figure 6. CRC calculation unit block diagram . . . 123
Figure 7. Power supply overview . . . 130
Figure 8. Supply configurations . . . 130
Figure 9. Brown-out reset waveform . . . 135
Figure 10. PVD thresholds . . . 136
Figure 11. CPU2 boot options . . . 138
Figure 12. Low-power modes possible transitions . . . 141
Figure 13. Real-time radio activity flags . . . 156
Figure 14. Simplified diagram of the reset circuit . . . 181
Figure 15. Clock tree . . . 186
Figure 16. HSE clock sources . . . 187
Figure 17. LSE clock sources . . . 190
Figure 18. Three-volt or five-volt tolerant GPIO structure (TT or FT) . . . 256
Figure 19. Input floating/pull up/pull down configurations . . . 261
Figure 20. Output configuration . . . 261
Figure 21. Alternate function configuration . . . 262
Figure 22. High impedance-analog configuration . . . 263
Figure 23. DMA block diagram . . . 293
Figure 24. DMAMUX block diagram . . . 316
Figure 25. Synchronization mode of the DMAMUX request line multiplexer channel . . . 319
Figure 26. Event generation of the DMA request line multiplexer channel . . . 319
Figure 27. Interrupt block diagram . . . 329
Figure 28. EXTI block diagram . . . 338
Figure 29. Configurable event trigger logic CPU wakeup . . . 341
Figure 30. Direct event trigger logic CPU wakeup . . . 342
Figure 31. ADC block diagram . . . 357
Figure 32. ADC calibration . . . 360
Figure 33. Calibration factor forcing . . . 360
Figure 34. Enabling/disabling the ADC . . . 361
Figure 35. ADC clock scheme . . . 362
Figure 36. ADC connectivity . . . 364
Figure 37. Analog-to-digital conversion time . . . 369
Figure 38. ADC conversion timings . . . 369
Figure 39. Stopping an ongoing conversion . . . 370
Figure 40. Single conversions of a sequence, software trigger . . . 373
Figure 41. Continuous conversion of a sequence, software trigger . . . 373
Figure 42. Single conversions of a sequence, hardware trigger . . . 374
Figure 43. Continuous conversions of a sequence, hardware trigger . . . 374
Figure 44. Data alignment and resolution . . . 375
Figure 45. Example of overrun (OVR) . . . 376
Figure 46. Wait mode conversion (continuous mode, software trigger) . . . 379
Figure 47. Behavior with WAIT = 0, AUTOFF = 1 . . . 380
Figure 48. Behavior with WAIT = 1, AUTOFF = 1 . . . 380

Figure 49. Analog watchdog guarded area . . . 381
Figure 50. ADC_AWD1_OUT signal generation . . . 383
Figure 51. ADC_AWD1_OUT signal generation (AWD flag not cleared by software) . . . 383
Figure 52. ADC1_AWD_OUT signal generation (on a single channel) . . . 383
Figure 53. Analog watchdog threshold update . . . 384
Figure 54. Temperature sensor and VREFINT channel block diagram . . . 385
Figure 55. VBAT channel block diagram . . . 387
Figure 56. Comparator block diagram . . . 407
Figure 57. Window mode . . . 409
Figure 58. Comparator hysteresis . . . 409
Figure 59. Comparator output blanking . . . 410
Figure 60. TSC block diagram . . . 417
Figure 61. Surface charge transfer analog I/O group structure . . . 418
Figure 62. Sampling capacitor voltage variation . . . 419
Figure 63. Charge transfer acquisition sequence . . . 420
Figure 64. Spread spectrum variation principle . . . 421
Figure 65. RNG block diagram . . . 435
Figure 66. Entropy source model . . . 436
Figure 67. RNG initialization overview . . . 438
Figure 68. AES block diagram . . . 447
Figure 69. ECB encryption and decryption principle . . . 449
Figure 70. CBC encryption and decryption principle . . . 450
Figure 71. CTR encryption and decryption principle . . . 451
Figure 72. GCM encryption and authentication principle . . . 452
Figure 73. GMAC authentication principle . . . 452
Figure 74. CCM encryption and authentication principle . . . 453
Figure 75. Encryption key derivation for ECB/CBC decryption (Mode 2) . . . 456
Figure 76. Example of suspend mode management . . . 457
Figure 77. ECB encryption . . . 458
Figure 78. ECB decryption . . . 458
Figure 79. CBC encryption . . . 459
Figure 80. CBC decryption . . . 459
Figure 81. ECB/CBC encryption (Mode 1) . . . 460
Figure 82. ECB/CBC decryption (Mode 3) . . . 461
Figure 83. Message construction in CTR mode . . . 463
Figure 84. CTR encryption . . . 464
Figure 85. CTR decryption . . . 464
Figure 86. Message construction in GCM . . . 466
Figure 87. GCM authenticated encryption . . . 467
Figure 88. Message construction in GMAC mode . . . 471
Figure 89. GMAC authentication mode . . . 471
Figure 90. Message construction in CCM mode . . . 472
Figure 91. CCM mode authenticated encryption . . . 474
Figure 92. 128-bit block construction with respect to data swap . . . 478
Figure 93. DMA transfer of a 128-bit data block during input phase . . . 480
Figure 94. DMA transfer of a 128-bit data block during output phase . . . 481
Figure 95. PKA block diagram . . . 496
Figure 96. Advanced-control timer block diagram . . . 523
Figure 97. Counter timing diagram with prescaler division change from 1 to 2 . . . 525
Figure 98. Counter timing diagram with prescaler division change from 1 to 4 . . . 525
Figure 99. Counter timing diagram, internal clock divided by 1 . . . 527
Figure 100. Counter timing diagram, internal clock divided by 2 . . . 527

Figure 101. Counter timing diagram, internal clock divided by 4 528
Figure 102. Counter timing diagram, internal clock divided by N. 528
Figure 103. Counter timing diagram, update event when ARPE=0 (TIMx_ARR not preloaded) 529
Figure 104. Counter timing diagram, update event when ARPE=1 (TIMx_ARR preloaded) 529
Figure 105. Counter timing diagram, internal clock divided by 1 531
Figure 106. Counter timing diagram, internal clock divided by 2 531
Figure 107. Counter timing diagram, internal clock divided by 4 532
Figure 108. Counter timing diagram, internal clock divided by N. 532
Figure 109. Counter timing diagram, update event when repetition counter is not used. 533
Figure 110. Counter timing diagram, internal clock divided by 1, TIMx_ARR = 0x6 534
Figure 111. Counter timing diagram, internal clock divided by 2 535
Figure 112. Counter timing diagram, internal clock divided by 4, TIMx_ARR=0x36 535
Figure 113. Counter timing diagram, internal clock divided by N. 536
Figure 114. Counter timing diagram, update event with ARPE=1 (counter underflow) 536
Figure 115. Counter timing diagram, Update event with ARPE=1 (counter overflow). 537
Figure 116. Update rate examples depending on mode and TIMx_RCR register settings 538
Figure 117. External trigger input block 539
Figure 118. TIM1 ETR input circuitry 539
Figure 119. Control circuit in normal mode, internal clock divided by 1 540
Figure 120. TI2 external clock connection example. 541
Figure 121. Control circuit in external clock mode 1 542
Figure 122. External trigger input block 542
Figure 123. Control circuit in external clock mode 2 543
Figure 124. Capture/compare channel (example: channel 1 input stage) 544
Figure 125. Capture/compare channel 1 main circuit 544
Figure 126. Output stage of capture/compare channel (channel 1, idem ch. 2 and 3) 545
Figure 127. Output stage of capture/compare channel (channel 4). 545
Figure 128. Output stage of capture/compare channel (channel 5, idem ch. 6) 546
Figure 129. PWM input mode timing 548
Figure 130. Output compare mode, toggle on OC1. 550
Figure 131. Edge-aligned PWM waveforms (ARR=8) 551
Figure 132. Center-aligned PWM waveforms (ARR=8). 552
Figure 133. Generation of 2 phase-shifted PWM signals with 50% duty cycle 554
Figure 134. Combined PWM mode on channel 1 and 3 555
Figure 135. 3-phase combined PWM signals with multiple trigger pulses per period 556
Figure 136. Complementary output with dead-time insertion 557
Figure 137. Dead-time waveforms with delay greater than the negative pulse 557
Figure 138. Dead-time waveforms with delay greater than the positive pulse. 558
Figure 139. Break and Break2 circuitry overview 560
Figure 140. Various output behavior in response to a break event on BRK (OSSI = 1) 562
Figure 141. PWM output state following BRK and BRK2 pins assertion (OSSI=1). 563
Figure 142. PWM output state following BRK assertion (OSSI=0) 564
Figure 143. Output redirection (BRK2 request not represented). 565
Figure 144. Clearing TIMx OCxREF 566
Figure 145. 6-step generation, COM example (OSSR=1). 567
Figure 146. Example of one pulse mode. 568
Figure 147. Retriggerable one pulse mode 570
Figure 148. Example of counter operation in encoder interface mode. 571
Figure 149. Example of encoder interface mode with TI1FP1 polarity inverted. 572
Figure 150. Measuring time interval between edges on 3 signals 573
Figure 151. Example of Hall sensor interface 575
Figure 152. Control circuit in reset mode 576

Figure 153. Control circuit in Gated mode . . . 577
Figure 154. Control circuit in trigger mode . . . 578
Figure 155. Control circuit in external clock mode 2 + trigger mode . . . 579
Figure 156. General-purpose timer block diagram . . . 622
Figure 157. Counter timing diagram with prescaler division change from 1 to 2 . . . 624
Figure 158. Counter timing diagram with prescaler division change from 1 to 4 . . . 624
Figure 159. Counter timing diagram, internal clock divided by 1 . . . 625
Figure 160. Counter timing diagram, internal clock divided by 2 . . . 626
Figure 161. Counter timing diagram, internal clock divided by 4 . . . 626
Figure 162. Counter timing diagram, internal clock divided by N . . . 627
Figure 163. Counter timing diagram, Update event when ARPE=0 (TIMx_ARR not preloaded) . . . 627
Figure 164. Counter timing diagram, Update event when ARPE=1 (TIMx_ARR preloaded) . . . 628
Figure 165. Counter timing diagram, internal clock divided by 1 . . . 629
Figure 166. Counter timing diagram, internal clock divided by 2 . . . 629
Figure 167. Counter timing diagram, internal clock divided by 4 . . . 630
Figure 168. Counter timing diagram, internal clock divided by N . . . 630
Figure 169. Counter timing diagram, Update event . . . 631
Figure 170. Counter timing diagram, internal clock divided by 1, TIMx_ARR=0x6 . . . 632
Figure 171. Counter timing diagram, internal clock divided by 2 . . . 633
Figure 172. Counter timing diagram, internal clock divided by 4, TIMx_ARR=0x36 . . . 633
Figure 173. Counter timing diagram, internal clock divided by N . . . 634
Figure 174. Counter timing diagram, Update event with ARPE=1 (counter underflow) . . . 634
Figure 175. Counter timing diagram, Update event with ARPE=1 (counter overflow) . . . 635
Figure 176. Control circuit in normal mode, internal clock divided by 1 . . . 636
Figure 177. TI2 external clock connection example . . . 636
Figure 178. Control circuit in external clock mode 1 . . . 637
Figure 179. External trigger input block . . . 638
Figure 180. Control circuit in external clock mode 2 . . . 639
Figure 181. Capture/Compare channel (example: channel 1 input stage) . . . 639
Figure 182. Capture/Compare channel 1 main circuit . . . 640
Figure 183. Output stage of Capture/Compare channel (channel 1) . . . 640
Figure 184. PWM input mode timing . . . 642
Figure 185. Output compare mode, toggle on OC1 . . . 644
Figure 186. Edge-aligned PWM waveforms (ARR=8) . . . 645
Figure 187. Center-aligned PWM waveforms (ARR=8) . . . 647
Figure 188. Generation of 2 phase-shifted PWM signals with 50% duty cycle . . . 648
Figure 189. Combined PWM mode on channels 1 and 3 . . . 649
Figure 190. Clearing TIMx OCxREF . . . 650
Figure 191. Example of one-pulse mode. . . . 651
Figure 192. Retriggerable one-pulse mode . . . 653
Figure 193. Example of counter operation in encoder interface mode . . . 654
Figure 194. Example of encoder interface mode with TI1FP1 polarity inverted . . . 655
Figure 195. Control circuit in reset mode . . . 656
Figure 196. Control circuit in gated mode . . . 657
Figure 197. Control circuit in trigger mode . . . 658
Figure 198. Control circuit in external clock mode 2 + trigger mode . . . 659
Figure 199. Master/Slave timer example . . . 660
Figure 200. Master/slave connection example with 1 channel only timers . . . 660
Figure 201. Gating TIM2 with OC1REF of TIM1 . . . **661**
Figure 202. Gating TIM2 with Enable of TIM1 . . . 662
Figure 203. Triggering TIM2 with update of TIM1 . . . 663
Figure 204. Triggering TIM2 with Enable of TIM1 . . . 663

Figure 205. Low-power timer block diagram . . . 694
Figure 206. Glitch filter timing diagram . . . 696
Figure 207. LPTIM output waveform, single counting mode configuration . . . 698
Figure 208. LPTIM output waveform, Single counting mode configuration and Set-once mode activated (WAVE bit is set) . . . 698
Figure 209. LPTIM output waveform, Continuous counting mode configuration . . . 699
Figure 210. Waveform generation . . . 700
Figure 211. Encoder mode counting sequence . . . 704
Figure 212. RTC block diagram . . . 719
Figure 213. Independent watchdog block diagram . . . 758
Figure 214. Watchdog block diagram . . . 768
Figure 215. Window watchdog timing diagram . . . 769
Figure 216. Block diagram . . . 775
Figure 217. I²C-bus protocol . . . 777
Figure 218. Setup and hold timings . . . 779
Figure 219. I2C initialization flow . . . 781
Figure 220. Data reception . . . 782
Figure 221. Data transmission . . . 783
Figure 222. Target initialization flow . . . 786
Figure 223. Transfer sequence flow for I2C target transmitter, NOSTRETCH = 0 . . . 788
Figure 224. Transfer sequence flow for I2C target transmitter, NOSTRETCH = 1 . . . 789
Figure 225. Transfer bus diagrams for I2C target transmitter (mandatory events only) . . . 790
Figure 226. Transfer sequence flow for I2C target receiver, NOSTRETCH = 0 . . . 791
Figure 227. Transfer sequence flow for I2C target receiver, NOSTRETCH = 1 . . . 792
Figure 228. Transfer bus diagrams for I2C target receiver (mandatory events only) . . . 792
Figure 229. Controller clock generation . . . 794
Figure 230. Controller initialization flow . . . 796
Figure 231. 10-bit address read access with HEAD10R = 0 . . . 796
Figure 232. 10-bit address read access with HEAD10R = 1 . . . 797
Figure 233. Transfer sequence flow for I2C controller transmitter, N ≤ 255 bytes . . . 798
Figure 234. Transfer sequence flow for I2C controller transmitter, N > 255 bytes . . . 799
Figure 235. Transfer bus diagrams for I2C controller transmitter (mandatory events only) . . . 800
Figure 236. Transfer sequence flow for I2C controller receiver, N ≤ 255 bytes . . . 802
Figure 237. Transfer sequence flow for I2C controller receiver, N > 255 bytes . . . 803
Figure 238. Transfer bus diagrams for I2C controller receiver (mandatory events only) . . . 804
Figure 239. Timeout intervals for $t_{LOW:SEXT}$, $t_{LOW:MEXT}$ . . . 808
Figure 240. Transfer sequence flow for SMBus target transmitter N bytes + PEC . . . 811
Figure 241. Transfer bus diagram for SMBus target transmitter (SBC = 1) . . . 812
Figure 242. Transfer sequence flow for SMBus target receiver N bytes + PEC . . . 813
Figure 243. Bus transfer diagrams for SMBus target receiver (SBC = 1) . . . 814
Figure 244. Bus transfer diagrams for SMBus controller transmitter . . . 815
Figure 245. Bus transfer diagrams for SMBus controller receiver . . . 817
Figure 246. USART block diagram . . . 839
Figure 247. Word length programming . . . 842
Figure 248. Configurable stop bits . . . 844
Figure 249. TC/TXE behavior when transmitting . . . 847
Figure 250. Start bit detection when oversampling by 16 or 8 . . . 848
Figure 251. usart_ker_ck clock divider block diagram . . . 851
Figure 252. Data sampling when oversampling by 16 . . . 852

Figure 253. Data sampling when oversampling by 8 . . . 853
Figure 254. Mute mode using Idle line detection . . . 860
Figure 255. Mute mode using address mark detection . . . 861
Figure 256. Break detection in LIN mode (11-bit break length - LBDL bit is set) . . . 864
Figure 257. Break detection in LIN mode vs. Framing error detection . . . 865
Figure 258. USART example of synchronous master transmission . . . 866
Figure 259. USART data clock timing diagram in synchronous master mode (M bits = 00) . . . 866
Figure 260. USART data clock timing diagram in synchronous master mode (M bits = 01) . . . 867
Figure 261. USART data clock timing diagram in synchronous slave mode (M bits = 00) . . . 868
Figure 262. ISO 7816-3 asynchronous protocol . . . 870
Figure 263. Parity error detection using the 1.5 stop bits . . . 872
Figure 264. IrDA SIR ENDEC block diagram . . . 876
Figure 265. IrDA data modulation (3/16) - normal mode . . . 876
Figure 266. Transmission using DMA . . . 878
Figure 267. Reception using DMA . . . 879
Figure 268. Hardware flow control between 2 USARTs . . . 879
Figure 269. RS232 RTS flow control . . . 880
Figure 270. RS232 CTS flow control . . . 881
Figure 271. Wake-up event verified (wake-up event = address match, FIFO disabled) . . . 884
Figure 272. Wake-up event not verified (wake-up event = address match, FIFO disabled) . . . 884
Figure 273. LPUART block diagram . . . 925
Figure 274. LPUART word length programming . . . 928
Figure 275. Configurable stop bits . . . 930
Figure 276. TC/TXE behavior when transmitting . . . 932
Figure 277. lpuart_ker_ck clock divider block diagram . . . 935
Figure 278. Mute mode using Idle line detection . . . 939
Figure 279. Mute mode using address mark detection . . . 940
Figure 280. Transmission using DMA . . . 942
Figure 281. Reception using DMA . . . 943
Figure 282. Hardware flow control between 2 LPUARTs . . . 944
Figure 283. RS232 RTS flow control . . . 944
Figure 284. RS232 CTS flow control . . . 945
Figure 285. Wake-up event verified (wake-up event = address match, FIFO disabled) . . . 948
Figure 286. Wake-up event not verified (wake-up event = address match, FIFO disabled) . . . 948
Figure 287. SPI block diagram . . . 976
Figure 288. Full-duplex single master/ single slave application . . . 977
Figure 289. Half-duplex single master/ single slave application . . . 978
Figure 290. Simplex single master/single slave application (master in transmit-only/ slave in receive-only mode) . . . 979
Figure 291. Master and three independent slaves . . . 980
Figure 292. Multimaster application . . . 981
Figure 293. Hardware/software slave select management . . . 982
Figure 294. Data clock timing diagram . . . 983
Figure 295. Data alignment when data length is not equal to 8-bit or 16-bit . . . 984
Figure 296. Packing data in FIFO for transmission and reception . . . 988
Figure 297. Master full-duplex communication . . . 991

Figure 298. Slave full-duplex communication 992
Figure 299. Master full-duplex communication with CRC 993
Figure 300. Master full-duplex communication in packed mode 994
Figure 301. NSSP pulse generation in Motorola SPI master mode 997
Figure 302. TI mode transfer 998
Figure 303. IPCC block diagram 1011
Figure 304. IPCC Simplex channel mode transfer timing 1012
Figure 305. IPCC Simplex - Send procedure state diagram 1013
Figure 306. IPCC Simplex - Receive procedure state diagram 1014
Figure 307. IPCC Half-duplex channel mode transfer timing 1015
Figure 308. IPCC Half-duplex - Send procedure state diagram 1015
Figure 309. IPCC Half-duplex - Receive procedure state diagram 1016
Figure 310. HSEM block diagram 1025
Figure 311. Procedure state diagram 1026
Figure 312. Interrupt state diagram 1029
Figure 313. Block diagram of debug support infrastructure 1040
Figure 314. JTAG TAP state machine 1043
Figure 315. Debug and access port connections 1055
Figure 316. Embedded cross trigger 1062
Figure 317. Mapping trigger inputs to outputs 1064
Figure 318. Cross trigger configuration example 1065
Figure 319. CPU2 CoreSight™ topology 1091
Figure 320. CPU1 CoreSight™ topology 1126
Figure 321. Trace port interface unit (TPIU) 1161

1 Documentation conventions

1.1 General information

The STM32WB15CC devices embed an Arm®[a] CPU1 Cortex®-M4 core.

1.2 List of abbreviations for registers

The following abbreviations[b] are used in register descriptions:

read/write (rw)	Software can read and write to this bit.
read-only (r)	Software can only read this bit.
write-only (w)	Software can only write to this bit. Reading this bit returns the reset value.
read/clear write0 (rc_w0)	Software can read as well as clear this bit by writing 0. Writing 1 has no effect on the bit value.
read/clear write1 (rc_w1)	Software can read as well as clear this bit by writing 1. Writing 0 has no effect on the bit value.
read/clear write (rc_w)	Software can read as well as clear this bit by writing to the register. The value written to this bit is not important.
read/clear by read (rc_r)	Software can read this bit. Reading this bit automatically clears it to 0. Writing this bit has no effect on the bit value.
read/set by read (rs_r)	Software can read this bit. Reading this bit automatically sets it to 1. Writing this bit has no effect on the bit value.
read/set (rs)	Software can read as well as set this bit. Writing 0 has no effect on the bit value.
read/write once (rwo)	Software can only write once to this bit and can also read it at any time. Only a reset can return the bit to its reset value.
toggle (t)	The software can toggle this bit by writing 1. Writing 0 has no effect.
read-only write trigger (rt_w1)	Software can read this bit. Writing 1 triggers an event but has no effect on the bit value.
Reserved (Res.)	Reserved bit, must be kept at reset value.

a. Arm is a registered trademark of Arm Limited (or its subsidiaries) in the US and/or elsewhere.

b. This is an exhaustive list of all abbreviations applicable to STMicroelectronics microcontrollers, some of them may not be used in the current document.

1.3 Register reset value

Bits (binary notation) or bits nibbles (hexadecimal notation) of which the reset value is undefined are marked as X.

Bits (binary notation) or bits nibbles (hexadecimal notation) of which the reset value is unmodified are marked as U.

1.4 Glossary

This section gives a brief definition of acronyms and abbreviations used in this document:

- **Word**: data of 32-bit length.
- **Half-word**: data of 16-bit length.
- **Byte**: data of 8-bit length.
- **AHB**: advanced high-performance bus.

1.5 Availability of peripherals

For availability of peripherals and their number across all devices, refer to the particular device datasheet.

2 System and memory overview

2.1 System architecture

The main system consists of 32-bit multilayer AHB bus matrix that interconnects:

- Seven masters:
  - CPU1 (CPU1 Cortex®-M4 with FPU) core I-bus
  - CPU1 (CPU1 Cortex®-M4 with FPU) core D-bus
  - CPU1 (CPU1 Cortex®-M4 with FPU) core S-bus
  - CPU2 (Cortex® -M0+) core S-bus
  - DMA1
  - Radio system
- Ten slaves:
  - Internal Flash memory on the CPU1 (CPU1 Cortex®-M4) ICode bus
  - Internal Flash memory on CPU1 (CPU1 Cortex®-M4) DCode bus
  - Internal Flash memory on CPU2 (Cortex® -M0+) S bus
  - Internal SRAM1 (12 KB)
  - Internal SRAM2a (32 KB) + SRAM2b (4 KB)
  - AHB1 peripherals including AHB to APB bridges and APB peripherals (connected to APB1 and APB2)
  - AHB2 peripherals
  - AHB4 shared peripheral
  - AHB5 including AHB to APB bridge and Radio peripherals (connected to APB3)

The bus matrix provides access from a master to a slave, enabling concurrent access and efficient operation even when several high-speed peripherals work simultaneously. This architecture is shown in *Figure 1*.

Figure 1. System architecture

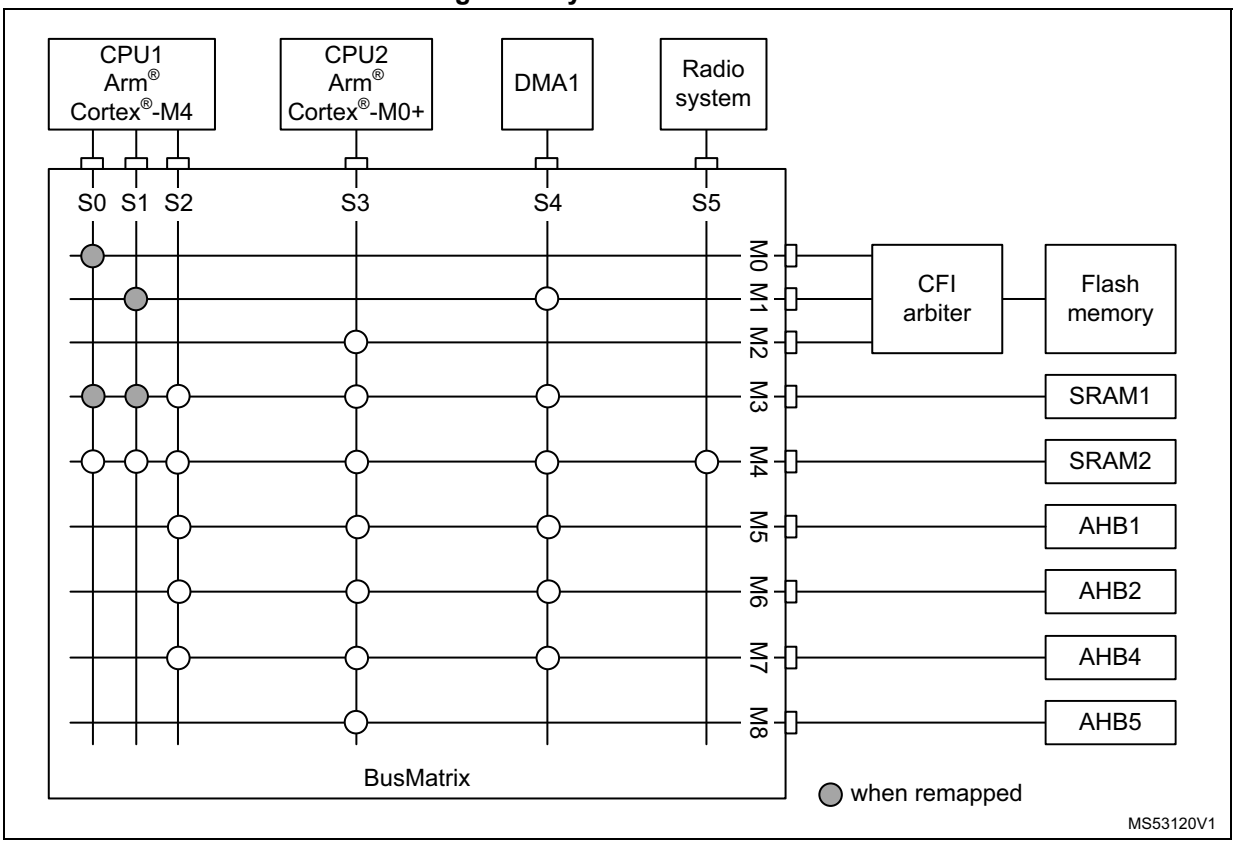

2.1.1 S0: CPU1 (CPU1 Cortex®-M4) I-bus

This bus connects the instruction bus of the CPU1 core to the BusMatrix. This bus is used by the core to fetch instructions. The targets of this bus are the internal Flash memory, SRAM1 (backup) and SRAM2 (backup).

2.1.2 S1: CPU1 (CPU1 Cortex®-M4) D-bus

This bus connects the data bus of the CPU1 core to the BusMatrix. This bus is used by the core for literal load and debug access. The targets of this bus are the internal Flash memory, SRAM1 (backup) and SRAM2 (backup).

2.1.3 S2: CPU1 (CPU1 Cortex®-M4) S-bus

This bus connects the system bus of the CPU1 core to the BusMatrix. This bus is used by the core to access data located in a peripheral or SRAM area. The targets of this bus are SRAM1 (backup), SRAM2 (backup), the AHB1 peripherals including the APB1 and APB2 peripherals, the AHB2 peripherals and the AHB4 peripherals.

2.1.4 S3: CPU2 (Cortex®-M0+) S-bus

This bus connects the system bus of the CPU2 core to the BusMatrix. This bus is used by the core to fetch instructions, for literal load and debug access, and access data located in a

peripheral or SRAM area. The targets of this bus are the internal Flash memory, SRAM1, SRAM2 (backup), the AHB1 peripherals including the APB1 and APB2 peripherals, the AHB2 peripherals, and the AHB4 peripherals and the AHB5 peripherals including the APB3 peripherals.

2.1.5 S4: DMA-bus

This bus connects the AHB master interface of the DMA to the BusMatrix.The targets of this bus are the SRAM1, SRAM2 (backup), the AHB1 peripherals including the APB1 and APB2 peripherals, the AHB2 peripherals and the AHB4 peripherals.

2.1.6 S5: Radio system-bus

This bus connects the AHB master interface of the Radio system to the BusMatrix.The targets of this bus is the SRAM2 (backup).

2.1.7 BusMatrix

The BusMatrix manages the access arbitration between masters. The arbitration uses a Round Robin algorithm. The BusMatrix is composed by six masters (CPU1: system bus, DCode bus, ICode bus, CPU2: system bus, DMA1-bus and Radio system-bus) and nine slaves (3 x Flash memory, SRAM1, SRAM2 (backup), AHB1 (including APB1 and APB2), AHB2, AHB4, and AHB5).

AHB/APB bridges

The two bridges AHB to APB1 and AHB to ABP2 provide full synchronous connections between the AHB and the two APB buses, allowing flexible selection of the peripheral frequency.

The bridges AHB to APB3 provide an a-synchronous connections between the AHB and the APB bus, allowing flexible selection of the frequency between the AHB and peripheral.

Refer to *Section 2.2: Memory organization* for the address mapping of the peripherals connected to this bridge.

After each device reset, all peripheral clocks are disabled (except for the SRAM1/2 and Flash memory interface). Before using a peripheral you have to enable its clock in the RCC_AHBxENR and the RCC_APBxENR registers.

Note: When a 16- or 8-bit access is performed on an APB register, the access is transformed into a 32-bit access: the bridge duplicates the 16- or 8-bit data to feed the 32-bit vector.

2.2 Memory organization

2.2.1 Introduction

Program memory, data memory, registers and I/O ports are organized within the same linear 4-Gbyte address space.

The bytes are coded in memory in Little Endian format. The lowest numbered byte in a word is considered the word's least significant byte and the highest numbered byte the most significant.

The addressable memory space is divided into eight main blocks, of 512 Mbytes each.

2.2.2 Memory map and register boundary addresses

Figure 2. Memory map

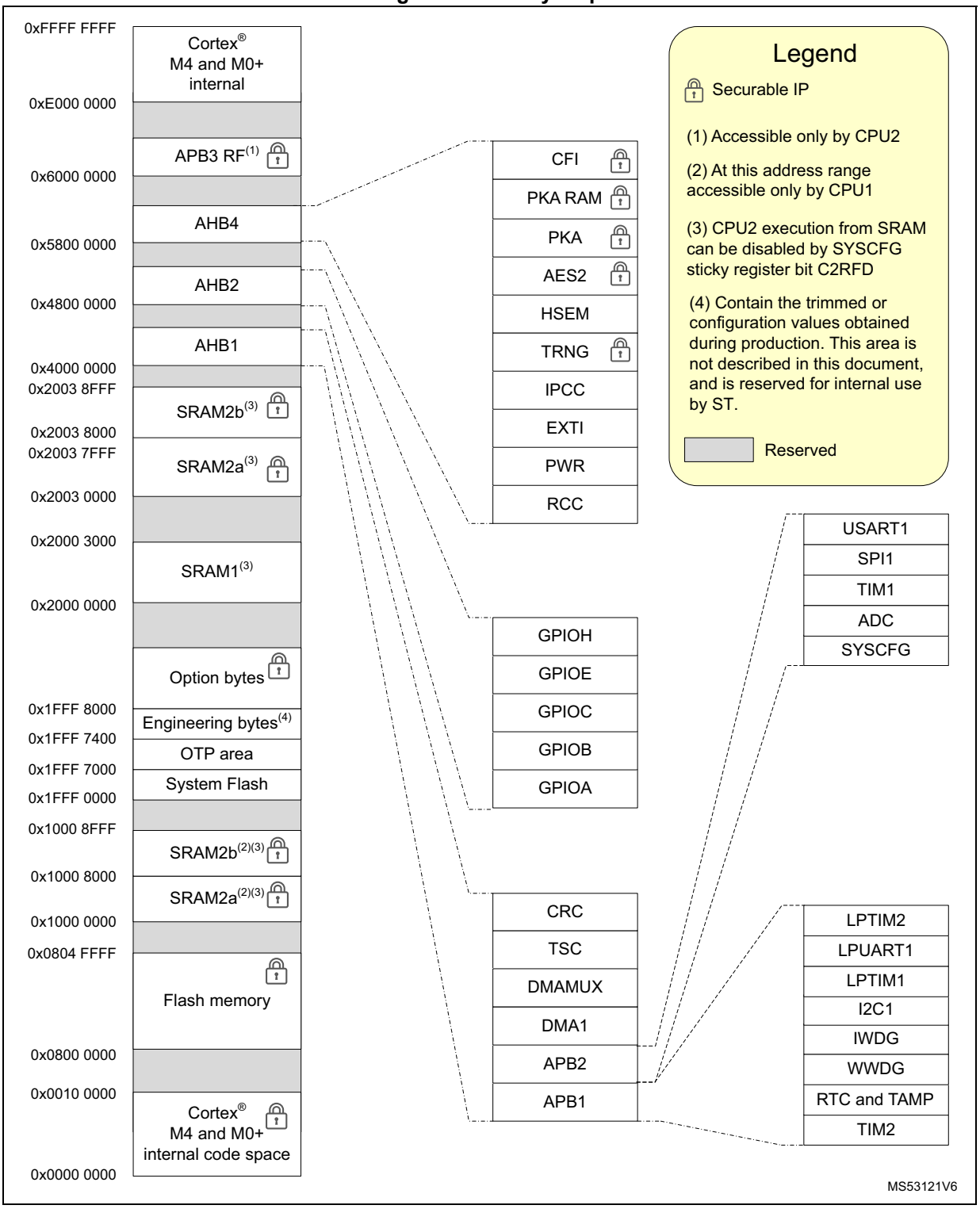

All the memory areas not allocated to on-chip memories and peripherals are considered “Reserved”. For the detailed mapping of available memory and register areas, refer to the following table, which gives the boundary addresses of the available peripherals.

Table 1. Memory map and peripheral register boundary addresses

Bus	Boundary address	Size (bytes)	Peripheral	Peripheral register map
-	0x6000 2000 - 0x8FFF FFFF	-	Reserved	-
APB3	0x6000 1000 - 0x6000 1FFF	4 K	Reserved	-
	0x6000 0800 - 0x6000 0FFF	2 K	Reserved	-
	0x6000 0400 - 0x6000 07FF	1 K	Radio CTRL	-
	0x6000 0000 - 0x6000 03FF	1 K	BLE CTRL	-
AHB4	0x5800 4400 - 0x5FFF FFFF	128 K	Reserved	-
	0x5800 4000 - 0x5800 43FF	1 K	FLASH	*Section 3.10.20: FLASH register map on page 118*
	0x5800 3400 - 0x5800 3FFF	3 K	Reserved	-
	0x5800 2400 - 0x5800 33FF	5 K	PKA RAM	*Section 20.7.5: PKA register map on page 520*
	0x5800 2000 - 0x5800 23FF		PKA	
	0x5800 1C00 - 0x5800 1FFF	1 K	Reserved	-
	0x5800 1800 - 0x5800 1BFF	1 K	AES2	*Section 19.7.18: AES register map on page 493*
	0x5800 1400 - 0x5800 17FF	1 K	HSEM	*Section 32.4.9: HSEM register map on page 1036*
	0x5800 1000 - 0x5800 13FF	1 K	True RNG	*Section 18.7.4: RNG register map on page 445*
	0x5800 0C00 - 0x5800 0FFF	1 K	IPCC	*Section 31.4.9: IPCC register map on page 1023*
	0x5800 0800 - 0x5800 0BFF	1 K	EXTI	*Section 14.5.17: EXTI register map on page 353*
	0x5800 0400 - 0x5800 07FF	1 K	PWR	*Section 6.6.22: PWR register map and reset value table on page 173*
	0x5800 0000 - 0x5800 03FF	1 K	RCC	*Section 8.4.47: RCC register map on page 249*

Table 1. Memory map and peripheral register boundary addresses (continued)

Bus	Boundary address	Size (bytes)	Peripheral	Peripheral register map
AHB2	0x5006 0400 - 0x57FF FFFF	-	Reserved	-
	0x5006 0000 - 0x5006 03FF	-	Reserved	-
	0x5004 0000 - 0x5004 03FF	-	Reserved	-
	0x4800 1C00 - 0x4800 1FFF	1 K	GPIOH	*Section 9.4.12: GPIO register map on page 263*
	0x4800 1400 - 0x4800 1BFF	3 K	Reserved	-
	0x4800 1000 - 0x4800 13FF	1 K	GPIOE	*Section 9.4.12: GPIO register map on page 263*
	0x4800 0C00 - 0x4800 0FFF	1 K	Reserved	-
	0x4800 0800 - 0x4800 0BFF	1 K	GPIOC	*Section 9.4.12: GPIO register map on page 263*
	0x4800 0400 - 0x4800 07FF	1 K	GPIOB	
	0x4800 0000 - 0x4800 03FF	1 K	GPIOA	
AHB1	0x4002 4400 - 0x47FF FFFF	-	Reserved	-
	0x4002 4000 - 0x4002 43FF	1 K	TSC	*Section 17.6.11: TSC register map on page 432*
	0x4002 3400 - 0x4002 3FFF	3 K	Reserved	-
	0x4002 3000 - 0x4002 33FF	1 K	CRC	*Section 5.4.6: CRC register map on page 128*
	0x4002 0C00 - 0x4002 2FFF	9 K	Reserved	-
	0x4002 0800 - 0x4002 0BFF	1 K	DMAMUX	*Section 12.6.7: DMAMUX register map on page 326*
	0x4002 0400 - 0x4002 07FF	1 K	Reserved	-
	0x4002 0000 - 0x4002 03FF	1 K	DMA1	*Section 11.6.7: DMA register map on page 309*
-	0x4001 3C00 - 0x4001 FFFF	49 K	Reserved	-

Table 1. Memory map and peripheral register boundary addresses (continued)

Bus	Boundary address	Size (bytes)	Peripheral	Peripheral register map
APB2	0x4001 3800 - 0x4001 3BFF	1 K	USART1	*Section 28.8.15: USART register map on page 920*
	0x4001 3400 - 0x4001 37FF	1 K	Reserved	-
	0x4001 3000 - 0x4001 33FF	1 K	SPI1	*Section 30.6.8: SPI register map on page 1009*
	0x4001 2C00 - 0x4001 2FFF	1 K	TIM1	*Section 21.4.30: TIM1 register map on page 618*
	0x4001 2800 - 0x4001 2BFF		Reserved	-
	0x4001 2400 - 0x4001 27FF	1K	ADC	*Section 15.12: ADC register map on page 403*
	0x4001 0400 - 0x4001 23FF	10 K	Reserved	-
	0x4001 0200 - 0x4001 03FF	512	COMP	*Section 16.6.2: COMP register map on page 415*
	0x4001 0000 - 0x4001 01FF	512	SYSCFG	*Section 10.2.17: SYSCFG register map on page 290*
APB1	0x4000 9800 - 0x4000 FFFF	26 K	Reserved	-
	0x4000 9400 - 0x4000 97FF	1 K	LPTIM2	*Section 23.7.11: LPTIM register map on page 716*
	0x4000 8400 - 0x4000 93FF	4 K	Reserved	-
	0x4000 8000 - 0x4000 83FF	1 K	LPUART1	*Section 29.7.13: LPUART register map on page 973*
	0x4000 7C00 - 0x4000 7FFF	1 K	LPTIM1	*Section 23.7.11: LPTIM register map on page 716*
	0x4000 5800 - 0x4000 7BFF	9 K	Reserved	-
	0x4000 5400 - 0x4000 57FF	1 K	I2C1	*Section 27.9.12: I2C register map on page 835*
	0x4000 3400 - 0x4000 53FF	8 K	Reserved	-
	0x4000 3000 - 0x4000 33FF	1 K	IWDG	*Section 25.4.6: IWDG register map on page 766*
	0x4000 2C00 - 0x4000 2FFF	1 K	WWDG	*Section 26.5.4: WWDG register map on page 772*
	0x4000 2800 - 0x4000 2BFF	1 K	RTC & TAMP	*Section 24.6.21: RTC register map on page 756*
	0x4000 2400 - 0x4000 27FF	1 K	Reserved	-
	0x4000 0400 - 0x4000 23FF	8 K	Reserved	-
	0x4000 0000 - 0x4000 03FF	1 K	TIM2	*Section 22.4.25: TIMx register map on page 690*
AHB4	0x2003 8000 – 0x2003 8FFF	4 K	SRAM2b	-
	0x2003 0000 – 0x2003 7FFF	32 K	SRAM2a	-
	0x2000 3000 - 0x2002 FFFF	36 K	Reserved	-

Table 1. Memory map and peripheral register boundary addresses (continued)

Bus	Boundary address	Size (bytes)	Peripheral	Peripheral register map
AHB1	0x2000 0000 - 0x2000 2FFF	12 K	SRAM1	-
AHB4	0x1FFF 7800 - 0x1FFF 787F	128 B	Flash memory options	*Section 3.10.20: FLASH register map on page 118*
	0x1FFF 7000 - 0x1FFF 73FF	1 K	Flash memory OTP	-
	0x1FFF 0000 - 0x1FFF 6FFF	28 K	Flash memory boot loader	-
	0x1000 0000 - 0x1000 8FFF	36 K	SRAM2a/b CPU1 mirror	-
	0x0800 0000 - 0x0804 FFFF	320 K	User flash memory	-
(1)	0x0000 0000 - 0x0004 FFFF	320 K	CPUn boot area	-

1. Bus depends upon selected CPUn Boot area.

2.2.3 Bit banding

The CPU1 map includes two bit-band regions. These regions map each word in an alias region of memory to a bit in a bit-band region of memory. writing to a word in the alias region has the same effect as a read-modify-write operation on the targeted bit in the bit-band region.

The AHB1, APB1, APB2 peripheral registers and the SRAM1, SRAM2a and SRAM2b are mapped to a bit-band region, hence single bit-band write and read operations are allowed. The operations are only available for CPU1 accesses, and not form other bus masters (e.g. DMA)

The peripheral bit-band alias is located from address 0x4200 0000 to 0x42FF FFFF

The SRAM bit-band alias is located from address 0x2200 0000 to 0x227F FFFF

A mapping formula shows how to reference each word in the alias region to a corresponding bit in the bit-band region. The mapping formula is:

bit_word_addr = bit_band_base + (byte_offset * 32) + (bit_number * 4), where:

- bit_word_addr is the address of the word in the alias memory region that maps to the targeted bit.
- bit_band_base is the starting address of the alias region
- byte_offset is the number of the byte in the bit_band region that contains the targeted bit
- bit_number is the bit position (0-7) of the targeted bit

Example

The following example shows how to map bit [2] of the byte located at SRAM1 address 0x2000 0300 to the alias region.

0x2200 6008 = 0x2200 0000 + 0x0300 * 32 + 2 * 4

Writing to address 0x2200 6008 has the same effect as a read-modify-write operation on bit [2] of the byte at SRAM1 address 0x2000 0300.

Reading address 0x2200 6008 returns the value 0x01 or 0x00 of bit [2] of the byte at SRAM1 address 0x2000 0300.

For more information on bit-band, refer to the Cortex®-M4 programming manual.

2.3 Boot configuration

Three different CPU1 boot modes can be selected through the BOOT0 pin or the nBOOT0 bit into the FLASH_OPTR register (if the nSWBOOT0 bit is cleared into the FLASH_OPTR register), and nBOOT1 bit in the FLASH_OPTR register , as shown in *Table 2*.

Table 2. Boot modes

nBOOT1 FLASH_OPTR[23]	nBOOT0 FLASH_OPTR[27]	BOOT0 pin PH3	nSWBOOT0 FLASH_OPTR[26]	Main flash empty(1)	Boot memory space alias
x	x	0	1	0	Main flash memory is selected as boot area
x	x	0	1	1	System memory is selected as boot area
x	1	x	0	x	Main flash memory is selected as boot area
0	x	1	1	x	Embedded SRAM1 is selected as boot area
0	0	x	0	x	
1	x	1	1	x	System memory is selected as boot area
1	0	x	0	x	

1. A flash empty check mechanism is implemented to force the boot from system flash if the first flash memory location is not programmed (0xFFFF FFFF) and if the boot selection was configured to boot from the main flash.

The values on both BOOT0 and BOOT1 are latched after a reset. It is up to the user to provide the correct value for the required boot mode.

The BOOT0 and BOOT1 are also re-sampled when exiting Standby mode. Consequently they must be kept in the required boot mode. After the startup delay, the CPU1 fetches the top-of-stack from address 0x0000 0000, then starts code execution from the boot memory at 0x0000 0004.

Depending on the selected boot mode, main flash, system flash, or SRAM1 memories are accessible as follows:

- Boot from main flash memory: the main flash memory is aliased in the CPU1 boot memory space at address 0x0000 0000, and is accessible even from its physical address 0x0800 0000. In other words, the flash memory content can be accessed starting from address 0x0000 0000 or 0x0800 0000.
- Boot from system flash memory: the system flash memory is aliased in the CPU1 boot memory space at address 0x0000 0000, and is also still accessible from its physical address 0x1FFF 0000.
- Boot from SRAM: the memory is aliased in the CPU1 boot memory space at address 0x0000 0000, and is accessible even from its physical address 0x2000 0000.

Empty check

An internal empty check flag (the EMPTY bit of the FLASH access control register (FLASH_ACR)) is available for easy programming of virgin devices by the boot loader. This flag is used when BOOT0 pin is defining main flash as the target boot area. When the flag is set, the device is considered as empty, and the system memory (boot loader) is selected instead of the main flash as a boot area, to allow user to program the memory. Therefore, some of the GPIOs are reconfigured from the high-Z state. Refer to AN2606 for more details concerning the bootloader and GPIO configuration in system memory boot mode. It is possible to disable this feature by configuring the option bytes to force boot from the main flash memory (nSWBOOT0 = 0, nBOOT0 = 1).

This empty check flag is updated only during the loading of option bytes: it is set when the content of the address 0x08000 0000 is read as 0xFFFF FFFF, otherwise it is cleared. A power reset or setting the OBL_LAUNCH bit in FLASH_CR register is needed to clear this flag after programming of a virgin device, to execute user code after System reset. The EMPTY bit can be written directly by software.

CPU1 physical remap

Following CPU1 boot the application software can modify the memory map at address 0x0000 0000. This modification is performed by programming the *SYSCFG memory remap register (SYSCFG_MEMRMP)* in the SYSCFG controller.

The following memories can be remapped:

- Main flash memory
- System flash memory
- SRAM

Embedded boot loader

The embedded boot loader is located in the system flash memory, programmed by ST during production. It is used to program the flash memory using one of the following device interfaces:

- USART1 on pins PA9 and PA10
- I2C1 on pins PB6 and PB7.
- SPI1 on pins PA4, PA5, PA6 and PA7

2.4 CPU2 boot

Following a device reset the CPU2 will only boot after CPU1 has set the C2BOOT bit in the *PWR control register 4 (PWR_CR4)*. The C2BOOT value is retained in Standby mode and the CPU2 will boot accordingly when exit from Standby.

The CPU2 will boot from it boot reset vector as defined by the flash user option C2OPT and SBRV.

The CPU2 may boot from anywhere in user flash or SRAM1/SRAM2a/SRAM2b.

CPU2 safe boot

When, after a reset, the User options are not valid and the BOOT0 and BOOT1 select CPU1 to boot from main flash memory, the CPU2 boots from a safe boot vector in main flash memory at address 0x0804 F000.

The safe boot can be used to restore the last known user options from an copied image.

2.5 CPU2 SRAM fetch disable

CPU2 execution from SRAM can be disabled by the C2RFD bit in SYSCFG register. Disabling CPU2 execution from SRAM improves robustness of the CPU2 software.

3 Embedded flash memory (FLASH)

3.1 Introduction

The flash memory interface manages CPU1 (CPU1 Cortex®-M4) AHB ICode and DCode accesses and the CPU2 (Cortex® -M0+) AHB to the flash memory. It implements the access arbitration between the two CPUs, the erase and program flash memory operations, the read and write protection, and the security mechanisms.

The flash memory interface accelerates code execution with a system of instruction prefetch and cache lines.

3.2 FLASH main features

- Up to 320 Kbytes of flash memory single bank architecture
- Memory organization: 1 bank
  - main memory: up to 320 Kbytes
  - page size: 2 Kbytes
- 72-bit wide data read (64 bits plus 8 ECC bits)
- 72-bit wide data write (64 bits plus 8 ECC bits)
- Page erase (2 Kbytes), and mass erase

Flash memory interface features:

- Flash memory read operations
- Flash memory program/erase operations
- Read protection activated by option (RDP)
- Two write protection areas selected by option (WRP)
- Two proprietary code read protection area selected by option (PCROP)
- CPU2 Security area
- Flash empty check
- Program and Erase suspension feature
- Prefetch on CPU1 ICODE and CPU2 S-bus
- CPU1 instruction cache: 32 cache lines of 4 x 64 bits on ICode (1 Kbyte RAM)
- CPU1 data cache: eight cache lines of 4 x 64 bits on DCode (256 bytes RAM)
- CPU2 instruction cache: four cache lines of 1 x 64 bits on S-bus (32 bytes RAM)
- Error code correction (ECC): eight bits for 64-bit
- Option byte loader

3.3 FLASH functional description

3.3.1 Flash memory organization

The memory is organized as 72-bit wide memory cells (64 bits, plus 8 ECC bits) that can be used for storing both code and data constants. It includes

- A main memory block containing 160 pages of 2 Kbytes, each page with eight rows of 256 bytes.
- An information block containing:
  - System memory from which the CPU1 boots in System memory boot mode. The area is reserved and contains the boot loader used to reprogram the flash memory through one of the following interfaces: USART1, I2C1. It is programmed by STMicroelectronics when the device is manufactured, and protected against spurious write/erase operations. For further details, refer to the AN2606 available from *www.st.com*.
  - 1 Kbyte (128 double words) OTP (one-time programmable) for user data. The OTP data cannot be erased and can be written only once. If only one bit is at 0, the entire double word (64 bits) cannot be written anymore, even with the value 0x0000 0000 0000 0000.
  - Option bytes for user configuration.

The memory is based on a main area and an information block as shown in *Table 3*.

Table 3. Flash memory - Single bank organization

Area	Addresses	Size (bytes)	Name
Main memory	0x0800 0000 - 0x0800 07FF	2 K	Page 0
	0x0800 0800 - 0x0800 0FFF	2 K	Page 1
	0x0800 1000 - 0x0800 17FF	2 K	Page 2
	0x0800 1800 - 0x0800 1FFF	2 K	Page 3
	. . .	. . .	. . .
	0x0804 F000 0x0804 F7FF	2 K	Page 158
	0x0804 F800 0x0804 FFFF	2 K	Page 159
Information block	0x1FFF 0000 - 0x1FFF 6FFF	28 K	System memory
	0x1FFF 7000 - 0x1FFF 73FF	1 K	OTP area
	0x1FFF 7800 - 0x1FFF 787F	128	Option bytes

3.3.2 Empty check

During the OBL phase, after loading all options, the flash memory interface checks whether the first location of the main memory is programmed. The result of this check in conjunction with the boot0 and boot1 information is used to determine where the system has to boot from. It prevents the system to boot from flash main memory area when, for instance, no user code has been programmed.

The flash main memory empty check status can be read from the EMPTY bit in *Flash memory access control register (FLASH_ACR)*. Software can modify the flash main memory empty status by writing to the EMPTY bit.

3.3.3 Error code correction (ECC)

Data in flash memory words are 72-bit wide: eight bits are added per each double word (64 bits). The ECC mechanism supports:

- One error detection and correction
- Two errors detection

When one error is detected and corrected, the flag ECCC (ECC correction) is set in *Flash memory ECC register (FLASH_ECCR)*. If ECCCIE is set, an interrupt is generated.

When two errors are detected, a flag ECCD (ECC detection) is set in *Flash memory ECC register (FLASH_ECCR)*. In this case, a NMI is generated.

When an ECC error is detected, the address of the failing double word is saved in ADDR_ECC[16:0] in the FLASH_ECCR register. ADDR_ECC[2:0] are always cleared. The bus-ID of the CPU accessing the address is saved in CPUID[2:0].

While ECCC or ECCD is set, FLASH_ECCR is not updated if a new ECC error occurs. FLASH_ECCR is updated only when ECC flags are cleared.

Note: For a virgin data (0xFF FFFF FFFF FFFF FFFF), one error is detected and corrected, but two errors detection is not supported.

When an ECC error is reported, a new read at the failing address may not generate an ECC error if the data is still present in the current buffer, even if ECCC and ECCD are cleared. If this is not the desired behavior, the user must reset the cache.

3.3.4 Read access latency

To correctly read data from flash memory, the number of wait states (LATENCY) must be correctly programmed in the *Flash memory access control register (FLASH_ACR)* according to the frequency of the flash memory (HCLK4) clock and the internal voltage range of the device V_{CORE}.

Table 4 shows the correspondence between wait states and flash clock frequency.

Table 4. Number of wait states vs, flash memory clock (HCLK4) frequency

Wait states (WS) (LATENCY)	HCLK4 (MHz)
0 WS (1 HCLK cycles)	≤ 18
1 WS (2 HCLK cycles)	≤ 36
2 WS (3 HCLK cycles)	≤ 54
3 WS (4 HCLK cycles)	≤ 64

After POR on reset, the HCLK4 clock frequency is 4 MHz and 0 wait state (WS) is configured in the FLASH_ACR register.

When woken-up from Standby, the HCLK4 clock frequency is 16 MHz and 0 wait state (WS) is configured in the FLASH_ACR register.

When changing the flash memory clock frequency, the software sequences described below must be applied in order to tune the number of wait states needed to access the flash memory.

Increasing the CPU frequency

1. Program the new number of wait states to the LATENCY bits in the *Flash memory access control register (FLASH_ACR)*.
2. Check that the new number of wait states is taken into account to access the flash memory by reading back the LATENCY from the *Flash memory access control register (FLASH_ACR)*, and wait until the programmed new number is read.
3. Modify the System cock source by writing the SW bits in the RCC_CFGR register.
4. If needed, modify the CPU clock prescaler by writing the SHDHPRE bits in RCC_EXTCFGR.
5. Optionally, check that the new System clock source or/and the new flash memory clock prescaler value is/are taken into account by reading the clock source status (SWS bits) in the RCC_CFGR register, or/and the AHB prescaler value (SHDHPREF bit), in the RCC_EXTCFGR register.

Decreasing the CPU frequency

1. Modify the System clock source by writing the SW bits in the RCC_CFGR register.
2. If needed, modify the flash memory clock prescaler by writing the SHDHPRE bits in RCC_EXTCFGR.
3. Check that the new System clock source or/and the new flash memory clock prescaler value is/are taken into account by reading the clock source status (SWS bits) in the RCC_CFGR register, or/and the AHB prescaler value (SHDHPREF bit), in the RCC_EXTCFGR register, and wait until the programmed new system clock source or/and new flash memory clock prescaler value is/are read.
4. Program the new number of wait states to the LATENCY bits in *Flash memory access control register (FLASH_ACR)*.
5. Optionally, check that the new number of wait states is used to access the flash memory by reading back the LATENCY from the *Flash memory access control register (FLASH_ACR)*.

3.3.5 Adaptive real-time memory accelerator (ART Accelerator)

The proprietary Adaptive real-time (ART) memory accelerator is optimized for STM32 industry-standard Arm® Cortex®-M4 with FPU processors. It balances the inherent performance advantage of the Arm® Cortex®-M4 with FPU over flash memory technologies, which normally require the processor to wait for the flash memory at higher operating frequencies.

To release the processor full performance, the accelerator implements an instruction prefetch queue and branch cache that increases program execution speed from the 64-bit flash memory. Based on CoreMark® benchmark, the performance achieved thanks to the ART Accelerator™ is equivalent to 0 wait state program execution from flash memory at a CPU frequency up to 64 MHz.

Instruction prefetch

The CPU1 fetches the instruction over the ICode bus and the literal pool (constant/data) over the DCode bus. The prefetch block aims at increasing the efficiency of ICode bus accesses.

The CPU2 fetches the instruction and the literal pool (constant/data) over the S-bus. The prefetch block aims at increasing the efficiency of S-bus accesses.

Each flash memory read operation provides 64 bits from either two instructions of 32 bits or four instructions of 16 bits according to the program launched. This 64-bits current instruction line is saved in a current buffer. So, in case of sequential code, at least two CPU cycles are needed to execute the previous read instruction line. Prefetch on the CPU1 ICode bus or CPU2 S-bus can be used to read the next sequential instruction line from the flash memory while the current instruction line is being requested by the CPU.

Prefetch is enabled by setting the PRFTEN bit in the *Flash memory access control register (FLASH_ACR)* for the CPU1 or *Flash memory CPU2 access control register (FLASH_C2ACR)* for the CPU2. This feature is useful if at least one wait state is needed to access the flash memory.

Figure 3 shows the execution of sequential 16-bit instructions with and without prefetch when three WS are needed to access the flash memory.

Figure 3. Sequential 16-bit instructions execution

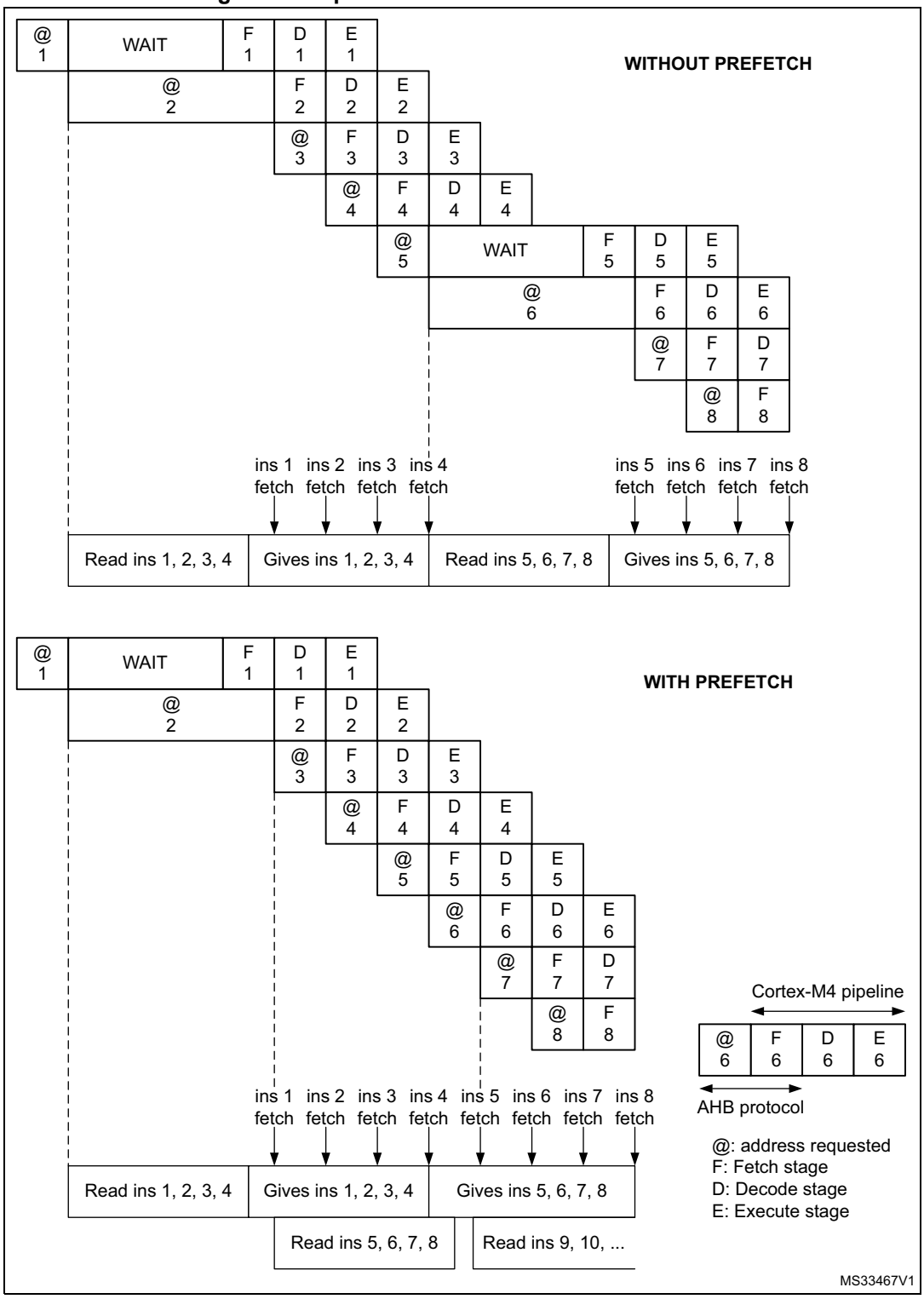

When the code is not sequential (branch), the instruction may not be present in the currently used instruction line or in the prefetched instruction line. In this case (miss), the penalty in terms of number of cycles is at least equal to the number of wait states.

If a loop is present in the current buffer, no new access is performed.

CPU1 Instruction cache memory (I-Cache)

To limit the CPU1 time lost due to jumps, it is possible to retain 32 lines of 4*64 bits (1 Kbyte) in an instruction cache memory.This feature can be enabled for the CPU1 by setting the instruction cache enable (ICEN) bit in the *Flash memory access control register (FLASH_ACR)*. Each time a miss occurs (requested data not present in the currently used instruction line, in the prefetched instruction line or in the instruction cache memory), the line read is copied into the instruction cache memory. If some data contained in the instruction cache memory are requested by the CPU, they are provided without inserting any delay. Once all the instruction cache memory lines have been filled, the LRU (least recently used) policy is used to determine the line to replace in the instruction memory cache. This feature is particularly useful in case of code containing loops.

The Instruction cache memory is enable after system reset.

CPU1 Data cache memory (D-Cache)

CPU1 literal pools are fetched from flash memory through the DCode bus during the execution stage of the CPU pipeline. Each CPU1 DCode bus read access fetches 64 bits that are saved in a current buffer. The CPU pipeline is consequently stalled until the requested literal pool is provided. To limit the time lost due to literal pools, accesses through the AHB databus DCode have priority over accesses through the AHB instruction bus ICode.

If some literal pools are frequently used, the CPU1 data cache memory can be enabled by setting the data cache enable (DCEN) bit in the *Flash memory access control register (FLASH_ACR)*. This feature works like the instruction cache memory, but the retained data size is limited to 8 lines of 4*64 bits (256 bytes).

The Data cache memory is enabled after system reset.

Note: The D-Cache is active only when data is requested by the CPU (not by DMAs). Data in option bytes block are not cacheable.

CPU2 cache memory (S-bus)

To limit the CPU2 time lost due to jumps, it is possible to retain four lines of 1*64 bits (32 bytes) in an instruction cache memory.This feature can be enabled for the CPU2 by setting the instruction cache enable (ICEN) bit in the *Flash memory CPU2 access control register (FLASH_C2ACR)*. Each time a miss occurs (requested data not present in the currently used instruction line, in the prefetched instruction line or in the instruction cache memory), the line read is copied into the instruction cache memory. If some data contained in the instruction cache memory are requested by the CPU, they are provided without inserting any delay. Once all the instruction cache memory lines have been filled, the LRU (least recently used) policy is used to determine the line to replace in the instruction memory cache. This feature is particularly useful in case of code containing loops.

The Instruction cache memory is enable after system reset.

CPU2 literal pools are fetched from flash memory through the S-bus during the execution stage of the CPU pipeline. Each CPU2 S-bus read access fetches 64 bits that are saved in a current buffer. The CPU pipeline is consequently stalled until the requested literal pool is provided.

No Data cache is available on Cortex®-M0+.

3.3.6 Flash memory program and erase operations

The embedded flash memory can be programmed using in-circuit or in-application programming.

The **in-circuit programming (ICP)** method is used to update the entire contents of the flash memory, using the JTAG, SWD protocol or the supported interfaces by the System boot loader, to load the user application for both the CPU1 and CPU2, into the microcontroller. ICP offers quick and efficient design iterations and eliminates unnecessary package handling or socketing of devices.

In contrast to the ICP method, **in-application programming (IAP)** can use any communication interface supported by the microcontroller (e.g. I/Os, UART, I^2C, SPI) to download programming data into memory. IAP allows the user to re-program the flash memory while the application is running. Nevertheless, part of the application has to have been previously programmed in the flash memory using ICP.

The contents of the flash memory are not guaranteed if a device reset occurs during a flash memory operation.

During a program/erase operation to the flash memory, any attempt to read the flash memory stalls the bus. The read operation proceeds correctly once the program/erase operation is completed.

Note: In a multi-CPU system it is good practice to use semaphores to manage flash memory program and erase operations, and prevent simultaneous operations by the CPUs.

Secure system flash memory programming

The secure CPU2 application can only be programmed by **in-application programming (IAP)** running on the secure CPU2 . Only the secure CPU2 is able to download programming data into secure part of the memory. Secure IAP allows the user to re-program the flash memory while the application is running. Nevertheless, part of the application has to have been previously programmed in the flash memory using ICP.

The **in-circuit programming (ICP)** System boot loader is able to communicate with the secure CPU2 IAP, to download programming data into secure memory.

Unlocking the flash memory

After reset, write is not allowed in the *Flash memory control register (FLASH_CR)* or *Flash memory CPU2 control register (FLASH_C2CR)* to protect the flash memory against possible unwanted operations due, for example, to electric disturbances. The following sequence is used to unlock these registers:

1. Write KEY1 = 0x4567 0123 in the *Flash memory key register (FLASH_KEYR)*
2. Write KEY2 = 0xCDEF 89AB in the *Flash memory key register (FLASH_KEYR)*.

Any wrong sequence locks up the FLASH_CR registers until the next system reset. In the case of a wrong key sequence, a bus error is detected and a hard fault interrupt is generated.

The FLASH_CR registers can be locked again by software by setting the LOCK bit in one of these registers.

Note: The FLASH_CR register cannot be written when the BSY bit in the Flash memory status register (FLASH_SR) or Flash memory CPU2 status register (FLASH_C2SR) is set. Any

attempt to write to these registers with the BSY bit set causes the AHB bus to stall until this bit is cleared.

Caution: Due to the structure of the memory (64 bits of data associated to 8 bits of ECC), interrupted operations can result in corrupted data and/or inconsistent ECC bits. The concerned address can trigger an ECC interrupt or an NMI when accessed later on. Consequently, handle write/erase operations with care, and ensure that ECC events are managed by firmware.

3.3.7 Flash main memory erase sequences

The erase operation can be performed at page level (page erase), or on the whole memory (mass erase). Mass erase does not affect the Information block (system flash, OTP and option bytes).

Flash memory page erase

The CPU1 is able to page erase only the non-secure part of the user flash. The secure CPU2 can page erase both the secure and non-secure parts of the user flash memory.

A page erase starts only when allowed by the PESD bit in the *Flash memory status register (FLASH_SR)* and in the *Flash memory CPU2 status register (FLASH_C2SR)*.

When a page is protected by PCROP or WRP it is not erased.

Table 5. Page erase overview

<table>
<tr><th>Page</th><th>PCROP</th><th>WRP</th><th>PCROP_RDP</th><th>Comment</th><th>WRPERR</th><th>CPU1 bus error</th><th>CPU2 bus error</th></tr>
<tr><td rowspan="4">Non secure</td><td rowspan="2">No</td><td>No</td><td rowspan="8">x</td><td>Page is erased</td><td>No</td><td rowspan="4">No</td><td rowspan="4">No</td></tr>
<tr><td>Yes</td><td rowspan="3">Page erase aborted (no page erase started)</td><td rowspan="3">Yes</td></tr>
<tr><td rowspan="2">Yes</td><td>No</td></tr>
<tr><td>Yes</td></tr>
<tr><td rowspan="5">Secure</td><td rowspan="3">No</td><td rowspan="2">No</td><td>Requested by CPU2, secure page is erased</td><td rowspan="3">No</td><td>N/A</td><td>No</td></tr>
<tr><td>Requested by CPU1, secure page erase is aborted (no secure page erase started)</td><td rowspan="4">Yes</td><td>N/A</td></tr>
<tr><td>Yes</td><td rowspan="3">Page erase aborted (no page erase started)</td><td rowspan="3">Yes(1)</td><td rowspan="3">No</td></tr>
<tr><td rowspan="2">Yes</td><td>No</td></tr>
<tr><td>Yes</td></tr>
</table>

1. WRPERR is generated only when PER is requested by CPU2 (Cortex-M0+). There is no WRPERR when PER is requested by CPU1.

To erase a page (2 Kbytes), follow the procedure below:

1. Check that no flash memory operation is ongoing by checking the BSY bit in the *Flash memory status register (FLASH_SR)* or *Flash memory CPU2 status register (FLASH_C2SR)*.
   Check that flash memory program and erase operations are allowed by checking the PESD bit in the *Flash memory status register (FLASH_SR)* or *Flash memory CPU2*

status register (FLASH_C2SR) (these checks are recommended even if status can change due to flash memory operation requests by the other CPU, to limit the risk of receiving a bus error when starting page erase).

2. Check and clear all error programming flags due to a previous programming. If not, PGSERR is set.
3. Check that bit CFGBSY in the FLASH_xxSR register is cleared.
4. Set the PER bit and select the page to erase (PNB) in the *Flash memory control register (FLASH_CR)* or *Flash memory CPU2 control register (FLASH_C2CR)*.
5. Set the STRT bit in the FLASH_xxCR register.
6. Wait until bit CFGBSY is cleared.

Note: The internal oscillator HSI16 (16 MHz) is enabled automatically when STRT bit is set, and disabled automatically when STRT bit is cleared, except if the HSI16 is previously enabled with HSION in RCC_CR register.

Flash memory mass erase

A flash memory mass erase by the CPU1 is ignored and a bus error is generated.

When PCROP or WRP is enabled, any flash memory mass erase is aborted and no erase started.

Table 6. Mass erase overview

<table>
<tr><th>PCROP</th><th>WRP</th><th>PCROP_RDP</th><th>Comment</th><th>WRPERR</th><th>CPU1 bus error</th><th>CPU2 bus error</th></tr>
<tr><td>No</td><td>No</td><td rowspan="5">x</td><td>Requested by secure CPU2, flash memory is mass erased</td><td>No</td><td rowspan="4">N/A</td><td rowspan="4">No</td></tr>
<tr><td>No</td><td>Yes</td><td rowspan="3">Requested by secure CPU2, mass erase aborted (no erase started)</td><td rowspan="3">Yes</td></tr>
<tr><td>Yes</td><td>No</td></tr>
<tr><td>Yes</td><td>Yes</td></tr>
<tr><td>x</td><td>x</td><td>Requested by CPU1, mass erase aborted (no erase started)</td><td>No</td><td>Yes</td><td>N/A</td></tr>
</table>

To perform a mass erase, follow the procedure below:

1. Check that no flash memory operation is ongoing by checking the BSY bit in the *Flash memory status register (FLASH_SR)* or *Flash memory CPU2 status register (FLASH_C2SR)*.
2. Check and clear all error programming flags due to a previous programming. If not, PGSERR is set.
3. Check that bit CFGBSY in the FLASH_xxSR register is cleared.
4. Set the MER bit in the *Flash memory control register (FLASH_CR)* or *Flash memory CPU2 control register (FLASH_C2CR)*.
5. Set the STRT bit in the FLASH_xxCR register.
6. Wait until bit CFGBSY is cleared.

Note: The internal oscillator HSI16 (16 MHz) is enabled automatically when STRT bit is set, and disabled automatically when STRT bit is cleared, except if the HSI16 is previously enabled with HSION in RCC_CR register.

3.3.8 Flash main memory programming sequences

The flash memory is programmed 72 bits (a double word, 64 bits plus ECC, 8 bits) at a time.

Programming in a previously programmed double word is only allowed when programming an all 0 value. It is not allowed to program any other value in a previously programmed double word, any attempt sets PROGERR flag in the *Flash memory status register (FLASH_SR)* or *Flash memory CPU2 status register (FLASH_C2SR)*, except when programming an already programmed double word with an all 0 value.

It is only possible to program a double word (2 x 32-bit data).

- Any attempt to write byte (8 bits) or half-word (16 bits) sets SIZERR flag in the FLASH_xxSR register.
- Any attempt to write a double word that is not aligned with a double word address sets PGAERR flag in the FLASH_xxSR register.

Only the secure CPU2 is able to download programming data into the secure part of the memory. A flash memory programming by the CPU1 in the secure flash memory area is ignored and a bus error is generated.

Standard programming

The flash memory programming sequence in standard mode is as follows:

1. Check that no flash main memory operation is ongoing by checking the BSY bit in the *Flash memory status register (FLASH_SR)* or *Flash memory CPU2 status register (FLASH_C2SR)*.
   Check that flash memory program and erase operations are allowed by checking the PESD bit in the *Flash memory status register (FLASH_SR)* or *Flash memory CPU2 status register (FLASH_C2SR)* (these checks are recommended even if status may change due to flash memory operation requests by the other CPU, to limit the risk of receiving a bus error when starting programming).
2. Check and clear all error programming flags due to a previous programming. If not, PGSERR is set.
3. Check that bit CFGBSY in the FLASH_xxSR register is cleared.
4. Set the PG bit in the *Flash memory control register (FLASH_CR)* or *Flash memory CPU2 control register (FLASH_C2CR)*.
5. Perform the data write operation at the desired memory address, inside main memory block or OTP area. Only double word (64 bits) can be programmed.
   a) Write a first word in an address aligned with double word
   b) Write the second word.
6. Wait until bit CFGBSY is cleared.
7. Check that EOP flag is set in the FLASH_xxSR register (meaning that the programming operation has succeeded), and clear it by software.
8. Clear the PG bit in the FLASH_xxSR register if there are no more programming requests anymore.

Note: When the flash memory interface has received a good sequence (a double word), programming is automatically launched and BSY bit is set. The internal oscillator HSI16 (16 MHz) is enabled automatically when PG bit is set, and disabled automatically when PG bit is cleared, except if the HSI16 is previously enabled with HSION in RCC_CR register.

If the user needs to program only one word, double word must be completed with the erase value 0xFFFF FFFF, to launch automatically the programming.

ECC is calculated from the double word to program.

Fast programming

This mode allows to program a row or 64 double words (512 bytes). It reduces the page programming time by eliminating the need for verifying the flash memory locations before they are programmed, and avoids rising and falling times of high voltage for each double word. During fast programming, the clock frequency (HCLK4) must be at least 8 MHz.

Only the main memory can be programmed in fast programming mode.

Fast row programming must be performed by executing software from SRAM and disabling interrupts when not relocating the CPU interrupt vector table. A read access from the CPU requesting row programming causes a bus error. A read from any other source (the other CPU or DMA) is stalled until the row programming finishes (standard double word programming does not cause a bus error to the requesting CPU, but stalls any read until standard programming finishes).

The flash main memory programming sequence in standard mode is described below:

1. Perform a mass erase. If not, PGSERR is set.
2. Check that no flash main memory operation is ongoing by checking the BSY bit in the *Flash memory status register (FLASH_SR)* or *Flash memory CPU2 status register (FLASH_C2SR)*.
   Check that flash memory program and erase operation is allowed by checking the PESD bit in the *Flash memory status register (FLASH_SR)* or *Flash memory CPU2 status register (FLASH_C2SR)* (these checks are recommended even if status may change due to flash memory operation requests by the other CPU, to limit the risk of receiving a bus error when starting programming).
3. Check and clear all error programming flags due to previous programming.
4. Check that bit CFGBSY in the FLASH_xxSR register is cleared.
5. Set the FSTPG bit in *Flash memory control register (FLASH_CR)* or *Flash memory CPU2 control register (FLASH_C2CR)*.
6. Write the 64 double words to program a row (512 bytes).
7. Wait until bit CFGBSY is cleared.
8. Check that EOP flag is set in the FLASH_xxSR register (meaning that the programming operation has succeed), and clear it by software.
9. Clear the FSTPG bit in the FLASH_xxSR register if there are no more programming requests anymore.

Note: When attempting to write in fast programming mode while a read operation is on going, the programming is aborted without any system notification (no error flag is set).

When the flash memory interface has received the first double word, programming is automatically launched. The BSY bit is set when the high voltage is applied for the first double word, and it is cleared when the last double word has been programmed or in case of error. The internal oscillator HSI16 (16 MHz) is enabled automatically when FSTPG bit is

set, and disabled automatically when FSTPG bit is cleared, except if the HSI16 is previously enabled with HSION in RCC_CR register.

The 64 double words must be written successively. The high voltage is kept on the flash memory for all the programming. Maximum time between two double words write requests is the time programming (around 20 µs). If a second double word arrives after this time programming, fast programming is interrupted and MISSERR is set.

High voltage must not exceed 8 ms for a full row between two erases. This is guaranteed by the sequence of 64 double words successively written with a clock system greater or equal to 8 MHz. An internal time-out counter counts 7 ms when fast programming is set and stops the programming when time-out is over. In this case the FASTERR bit is set.

If an error occurs, high voltage is stopped and next double word to programmed is not programmed. Anyway, all previous double words have been properly programmed.

Programming errors signaled by flags

Several kind of errors can be detected. In case of error, the flash memory operation (programming or erasing) is aborted.

- **PROGERR**: Programming error

  In standard programming: PROGERR is set if the word to write with values different from all 0 has not been previously erased, except if the value to program is all 0. If any other error (SIZERR, PAGERR, PGSERR, WRPERR) occurs the PROGRERR may not be set even if there is a word re-programming without erase error.
- **SIZERR**: Size programming error

  In standard programming or in fast programming: only double word can be programmed, and only 32-bit data can be written. SIZERR is set if a byte or an half-word is written.
- **PGAERR**: Alignment programming error

  PGAERR is set if one of the following conditions occurs:
  - Alignment programming errors are individually checked per CPU. No checks are available for simultaneous multi-CPU programming. HSEM or other software mechanisms shall be used to prevent simultaneous multi CPU programming.
  - In standard programming: the first word to be programmed is not aligned with a double word address, or the second word does not belong to the same double word address.
  - In fast programming: the data to program does not belong to the same row than the previous programmed double words, or the address to program is not greater than the previous one.
- **PGSERR**: Programming sequence error

  PGSERR is set if one of the following conditions occurs:
  - In the standard programming sequence or the fast programming sequence: data is written when PG and FSTPG are cleared.
  - In the standard programming sequence or the fast programming sequence: MER and PER are not cleared when PG or FSTPG is set.
  - In the fast programming sequence: the Mass erase is not performed before setting the FSTPG bit.
  - In the mass erase sequence: PG, FSTPG, and PER are not cleared when MER is set.

  - In the page erase sequence: PG, FSTPG, and MER are not cleared when PER is set.
  - PGSERR is set also if PROGERR, SIZERR, PGAERR, WRPERR, MISSERR, FASTERR, or PGSERR is set due to a previous programming error.
  - In the fast programming sequence: if the row to be programmed is on a page different from the one previously erased. If a mass erase has been done it is allowed to program rows on higher order pages, but not on lower order.
- **WRPERR**: Write protection error

  WRPERR is set if one of the following conditions occurs:
  - Attempt to program or erase in a write protected area (WRP) or in a PCROP area.
  - Attempt to perform a mass erase when one page or more is protected by WRP or PCROP.
  - The debug features are connected or the boot is executed from SRAM or from system flash when the read protection (RDP) is set to Level 1.
  - Attempt to modify the option bytes when the read protection (RDP) is set to Level 2, except when requested by the secure CPU2.
- **MISSERR**: Fast programming data miss error

  In fast programming: all the data must be written successively. MISSERR is set if the previous data programmation is finished and the next data to program is not written yet.
- **FASTERR**: Fast programming error

  In fast programming: FASTERR is set if one of the following conditions occurs:
  - When FSTPG bit is set for more than 7 µs, which generates a time-out detection.
  - When the row fast programming has been interrupted by a MISSERR, PGAERR, WRPERR or SIZERR.

If an error occurs during a program or erase operation, one of the following error flags is set in the *Flash memory status register (FLASH_SR)* or *Flash memory CPU2 status register (FLASH_C2SR)*:

- PROGERR, SIZERR, PGAERR, PGSERR, MISSERR (program error flags)
- WRPERR (protection error flag)

In this case, if the error interrupt enable bit ERRIE is set in the *Flash memory control register (FLASH_CR)* or in the *Flash memory CPU2 control register (FLASH_C2CR)*, an interrupt is generated and the operation error flag OPERR is set in the FLASH_xxSR register.

Note: If several successive errors are detected (for example, in case of DMA transfer to the flash memory), the error flags cannot be cleared until the end of the successive write request.

Programming errors causing a bus error

Some error conditions, listed below, do not generate an error flag but a bus error instead.

- AHB write to any page when RDP level 1 and boot is performed from system flash memory or SRAM1
- AHB write when flash memory is powered down
- Read or write from flash memory through the debugger
- Reading from flash memory when fast row programming is ongoing, from the source which requested the fast row programming.
- Requesting a new programming request, when the previous one has not finished.
- FLASH_CR register write between the two accesses of a double word programming.
- FLASH_CR register write when PESDx is active (set).
- Writing a wrong key in FLASH_KEYR or FLASH_OPTKEYR register
- Any subsequent write to FLASH_KEYR or FLASH_OPTKEYR after unlocking the respective feature

PGSERR and PGAERR in a page-based row programming

When performing a fast programming *Table 7* describes how PGSERR and PGAERR are handled.

Table 7. Errors in page-based row programming

Last page / row	Current page / row	MER active	PER active
page [x] / row [y]	page [x] / row [y-n]	PGAERR	PGAERR
page [x] / row [y]	page [x-n] / row [any]	PGAERR and PGSERR	PGAERR and PGSERR
page [x] / row [y]	page [x+n] / row [any]	No error	PGAERR

When after a system reset neither MER nor PER is performed, any programming attempt causes PGAERR and PGSERR errors.

Programming and caches

If a flash memory write access impacts data in the data cache, the flash memory write access modifies the data in the memory and the data in the cache.

If an erase operation in flash memory also concerns data in the data or instruction cache, the user has to ensure that these data are rewritten before they are accessed during code execution. Upon an erase operation the cache content is invalidated.

Note: The I/D cache must be flushed only when it is disabled (I/DCEN = 0).

3.4 FLASH option bytes

3.4.1 Option bytes description

The option bytes are configured by the end user depending on the application requirements. As a configuration example, the watchdog may be selected in hardware or software mode (refer to *Section 3.4.2: Option bytes programming*).

A double word is split up in option bytes as indicated in *Table 8*.

Table 8. Option bytes format

63-56	55-48	47-40	39-32	31-24	23-16	15 -8	7-0
Complemented option byte 3	Complemented option byte 2	Complemented option byte 1	Complemented option byte 0	Option byte 3	Option byte 2	Option byte 1	Option byte 0

The organization of these bytes in the information block is shown in *Table 9*. The option bytes can be read from the memory locations listed in *Table 9* or from the Option byte registers:

- *Flash memory option register (FLASH_OPTR)*
- *Flash memory PCROP zone A start address register (FLASH_PCROP1ASR)*
- *Flash memory PCROP zone A end address register (FLASH_PCROP1AER)*
- *Flash memory PCROP zone B start address register (FLASH_PCROP1BSR)*
- *Flash memory PCROP zone B end address register (FLASH_PCROP1BER)*
- *Flash memory WRP area A address register (FLASH_WRP1AR)*
- *Flash memory WRP area B address register (FLASH_WRP1BR)*
- *Flash memory IPCC mailbox data buffer address register (FLASH_IPCCBR)*
- *Secure flash memory start address register (FLASH_SFR)*
- *Flash memory secure SRAM2 start address and CPU2 reset vector register (FLASH_SRRVR)*

Table 9. Option bytes organization

Address[1]	31	30	29	28	27	26	25	24	23	22	21	20	19	18	17	16	15	14	13	12	11	10	9	8	7	6	5	4	3	2	1	0
1FFF7800	AGC_TRIM			nRST_MODE_0	nBOOT0	nSWBOOT0	SRAM2_RST	SRAM2_PE	nBOOT1	nRST_MODE_1	Unused		WWDG_SW	IWDG_STBY	IWDG_STOP	IWDG_SW	IRHEN	nRST_SHDW	nRST_STBY	nRST_STOP	BOR_LEV			ESE	RDP							
1FFF7808	Unused																							PCROP1A_STRT								
1FFF7810	PCROP_RDP	Unused																						PCROP1A_END								
1FFF7818	Unused								WRP1A_END								Unused								WRP1A_STRT							
1FFF7820	Unused								WRP1B_END								Unused								WRP1B_STRT							

Table 9. Option bytes organization (continued)

Address[1]	31	30	29	28	27	26	25	24	23	22	21	20	19	18	17	16	15	14	13	12	11	10	9	8	7	6	5	4	3	2	1	0
1FFF7828	Unused																							PCROP1B_STRT								
1FFF7830	Unused																							PCROP1B_END								
1FFF7838 to 1FFF7860	Unused																															
1FFF7868	Unused																		IPCCDBA													
1FFF7870	Unused																			DDS	Unused			FSD	SFSA							
1FFF7878	C2OPT	BRSD_B	Unused			SBRSA_B		Unused	BRSD_A	SBRSA_A					Unused	SBRV																

1. The upper 32-bits of the double-word address contain the inverted data from the lower 32 bits.

User and read protection option bytes

Flash memory address: 0x1FFF 7800

Reset value: 0b0011 1101 11xx 1111 1111 0001 1010 1010 (ST production value)

31	30	29	28	27	26	25	24	23	22	21	20	19	18	17	16
AGC_TRIM[2:0]			nRST_MODE_0	n BOOT0	nSW BOOT0	SRAM2_RST	SRAM2_PE	n BOOT1	nRST_MODE_1	Res.	Res.	WWDG_SW	IWDG_STDBY	IWDG_STOP	IWDG_SW
r	r	r	r	r	r	r	r	r	r			r	r	r	r

15	14	13	12	11	10	9	8	7	6	5	4	3	2	1	0
IRHEN	nRST_SHDW	nRST_STDBY	nRST_STOP	BOR_LEV[2:0]			ESE	RDP[7:0]							
r	r	r	r	r	r	r	r	r	r	r	r	r	r	r	r

Bits 31:29 **AGC_TRIM[2:0]**: Automatic gain control trimming.
Default value 0b001.

Bit 28 **nRST_MODE_0**: PB11 GPIO mode

– 1:

nRST_MODE_1 = 0: GPIO: standard GPIO pad functionality. Only internal RESET possible
nRST_MODE_1 = 1: bidirectional reset: NRST pin configured in reset input/output mode (default mode). GPIO functionality is not available on PB11.

– 0:

nRST_MODE_1 = 0: Bidirectional reset: NRST pin configured in reset input/output mode. GPIO functionality is not available on PB11.

nRST_MODE_1 = 1: Reset Input only: a low level on the NRST pin generates system reset, internal RESET.

Bit 27 **nBOOT0:** nBOOT0 option bit
0: nBOOT0 = 0
1: nBOOT0 = 1

Bit 26 **nSWBOOT0:** Software BOOT0
0: BOOT0 taken from the option bit nBOOT0
1: BOOT0 taken from PH3/BOOT0 pin

Bit 25 **SRAM2_RST:** SRAM2 and PKA RAM erase when system reset
0: SRAM2 and PKA RAM erased when a system reset occurs
1: SRAM2 and non-secure PKA RAM not erased when a system reset occurs

Bit 24 **SRAM2_PE:** SRAM2 parity check enable
0: SRAM2 parity check enabled
1: SRAM2 parity check disabled

Bit 23 **nBOOT1:** Boot configuration
Together with the BOOT0 pin or option bit nBOOT0 (depending on nSWBOOT0 option bit configuration), this bit selects boot mode from the flash main memory, SRAM1 or the System memory. Refer to *Section 2.3: Boot configuration*.

Bit 22 **nRST_MODE_1**: PB11 reset mode
– 1
nRST_MODE_0 = 0: Reset input only: a low level on the NRST pin generates system reset, internal RESET not propagated to the NSRT pin
nRST_MODE_0 = 1: Bidirectional reset: NRST pin configured in reset input/output mode (default mode)
– 0
nRST_MODE_0 = 0: Bidirectional reset: NRST pin configured in reset input/output mode
nRST_MODE_0 = 1: GPIO: standard GPIO pad functionality, only internal reset possible

Bits 21:20 Reserved, must be kept at reset value.

Bit 19 **WWDG_SW:** Window watchdog selection
0: Hardware window watchdog
1: Software window watchdog

Bit 18 **IWDG_STDBY:** Independent watchdog counter freeze in Standby mode
0: Independent watchdog counter is frozen in Standby mode
1: Independent watchdog counter is running in Standby mode

Bit 17 **IWDG_STOP:** Independent watchdog counter freeze in Stop mode
0: Independent watchdog counter is frozen in Stop mode
1: Independent watchdog counter is running in Stop mode

Bit 16 **IWDG_SW:** Independent watchdog selection
0: Hardware independent watchdog
1: Software independent watchdog

Bit 15 **IRHEN:** Internal reset holder enable bit
0: Internal resets are propagated as simple pulse on NRST pin
1: Internal resets drives NRST pin low until it is seen as low level

Bit 14 **nRST_SHDW**
0: Reset generated when entering the Shutdown mode
1: No reset generated when entering the Shutdown mode

Bit 13 **nRST_STDBY**
0: Reset generated when entering the Standby mode
1: No reset generate when entering the Standby mode

Bit 12 **nRST_STOP**
0: Reset generated when entering the Stop mode
1: No reset generated when entering the Stop mode

Bits 11:9 **BOR_LEV[2:0]:** BOR reset Level

These bits contain the VDD supply level threshold that activates/releases the reset.

000: BOR Level 0. Reset level threshold is ~ 1.7 V
001: BOR Level 1. Reset level threshold is ~ 2.0 V
010: BOR Level 2. Reset level threshold is ~ 2.2 V
011: BOR Level 3. Reset level threshold is ~ 2.5 V
100: BOR Level 4. Reset level threshold is ~ 2.8 V

Bit 8 **ESE:** System security enabled flag.

0: Security disabled
1: Security enabled

Bits 7:0 **RDP[7:0]:** Read protection level

0xAA: Level 0, read protection not active
0xCC: Level 2, chip read protection active
Others: Level 1, memories read protection active

PCROP1A start address option bytes

Flash memory address: 0x1FFF 7808

Reset value: 0bxxxx xxxx xxxx xxxx xxxx xxx1 1111 1111, (ST production value)

31	30	29	28	27	26	25	24	23	22	21	20	19	18	17	16
Res.	Res.	Res.	Res.	Res.	Res.	Res.	Res.	Res.	Res.	Res.	Res.	Res.	Res.	Res.	Res.

15	14	13	12	11	.10	9	8	7	6	5	4	3	2	1	0
Res.	Res.	Res.	Res.	Res.	Res.	Res.	PCROP1A_STRT[8:0]								
							r	r	r	r	r	r	r	r	r

Bits 31:9 Reserved, must be kept at reset value.

Bits 8:0 **PCROP1A_STRT[8:0]:** PCROP1A area start offset

PCROP1A_STRT contains the first 1 Kbyte page of the PCROP1A area.

PCROP1A end address option bytes

Flash memory address: 0x1FFF 7810

Reset value: 0b1xxx xxxx xxxx xxxx xxxx xxx0 0000 0000 (ST production value)

31	30	29	28	27	26	25	24	23	22	21	20	19	18	17	16
PCROP_RDP	Res.	Res.	Res.	Res.	Res.	Res.	Res.	Res.	Res.	Res.	Res.	Res.	Res.	Res.	Res.
r															

15	14	13	12	11	10	9	8	7	6	5	4	3	2	1	0
Res.	Res.	Res.	Res.	Res.	Res.	Res.	PCROP1A_END[8:0]								
							r	r	r	r	r	r	r	r	r

Bit 31 **PCROP_RDP:** PCROP area preserved when RDP level is decreased
This bit is set only. It is reset after a full mass erase due to a change of RDP from Level 1 to Level 0.
0: PCROP area is not erased when the RDP level is decreased from Level 1 to Level 0.
1: PCROP area is erased when the RDP level is decreased from Level 1 to Level 0 (full mass erase).

Bits 30:9 Reserved, must be kept at reset value.

Bits 8:0 **PCROP1A_END:** PCROP1A area end offset
PCROP1A_END contains the last 1 Kbyte page of the PCROP1A area.

WRP Area A address option bytes

Flash memory address: 0x1FFF 7818

Reset value: 0xXX00 XXFF (ST production value)

31	30	29	28	27	26	25	24	23	22	21	20	19	18	17	16
Res.	Res.	Res.	Res.	Res.	Res.	Res.	Res.	WRP1A_END[7:0]							
								r	r	r	r	r	r	r	r
15	14	13	12	11	10	9	8	7	6	5	4	3	2	1	0
Res.	Res.	Res.	Res.	Res.	Res.	Res.	Res.	WRP1A_STRT[7:0]							
								r	r	r	r	r	r	r	r

Bits 31:24 Reserved, must be kept at reset value.

Bits 23:16 **WRP1A_END[7:0]:** WRP area “A” end offset
WRPA1_END contains the last 2 Kbytes page of the WRP area “A”.

Bits 15:8 Reserved, must be kept at reset value.

Bits 7:0 **WRP1A_STRT[7:0]:** WRP area “A” start offset
WRPA1_STRT contains the first 2 Kbytes page of the WRP area “A”.

WRP Area B address option bytes

Flash memory address: 0x1FFF 7820

Reset value: 0xXX00 XXFF (ST production value)

31	30	29	28	27	26	25	24	23	22	21	20	19	18	17	16
Res.	Res.	Res.	Res.	Res.	Res.	Res.	Res.	WRP1B_END[7:0]							
								r	r	r	r	r	r	r	r
15	14	13	12	11	10	9	8	7	6	5	4	3	2	1	0
Res.	Res.	Res.	Res.	Res.	Res.	Res.	Res.	WRP1B_STRT[7:0]							
								r	r	r	r	r	r	r	r

Bits 31:24 Reserved, must be kept at reset value.

Bits 23:16 **WRP1B_END[7:0]:** WRP area “B” end offset
WRPB1_END contains the last 2 Kbytes page of the WRP area “B”.

Bits 15:8 Reserved, must be kept at reset value.

Bits 7:0 **WRP1B_STRT[7:0]:** WRP area “B” start offset
WRPB1_STRT contains the first 2 Kbytes page of the WRP area “B”.

PCROP1B start address option bytes

Flash memory address: 0x1FFF 7828

Reset value: 0bxxxx xxxx xxxx xxxx xxxx xxx1 1111 1111 (ST production value)

31	30	29	28	27	26	25	24	23	22	21	20	19	18	17	16
Res.	Res.	Res.	Res.	Res.	Res.	Res.	Res.	Res.	Res.	Res.	Res.	Res.	Res.	Res.	Res.
15	14	13	12	11	10	9	8	7	6	5	4	3	2	1	0
Res.	Res.	Res.	Res.	Res.	Res.	Res.	PCROP1B_STRT[8:0]								
							r	r	r	r	r	r	r	r	r

Bits 31:9 Reserved, must be kept at reset value.

Bits 8:0 **PCROP1B_STRT[8:0]:** PCROP1B area start offset
PCROP1B_STRT contains the first 1 Kbyte page of the PCROP1B area.

PCROP1B end address option bytes

Flash memory address: 0x1FFF 7830

Reset value: 0bxxxx xxxx xxxx xxxx xxxx xxx0 0000 0000 (ST production value)

31	30	29	28	27	26	25	24	23	22	21	20	19	18	17	16
Res.	Res.	Res.	Res.	Res.	Res.	Res.	Res.	Res.	Res.	Res.	Res.	Res.	Res.	Res.	Res.
15	14	13	12	11	10	9	8	7	6	5	4	3	2	1	0
Res.	Res.	Res.	Res.	Res.	Res.	Res.	PCROP1B_END[8:0]								
							r	r	r	r	r	r	r	r	r

Bits 31:9 Reserved, must be kept at reset value.

Bits 8:0 **PCROP1B_END[8:0]:** PCROP1B area end offset
PCROP1B_END contains the last 1 Kbyte page of the PCROP1B area.

IPCC mailbox data buffer address option bytes

Flash memory address: 0x1FFF 7868

Reset value: 0bXXXX XXXX XXXX XXXX XX00 0000 0000 0000 (ST production value)

31	30	29	28	27	26	25	24	23	22	21	20	19	18	17	16
Res.	Res.	Res.	Res.	Res.	Res.	Res.	Res.	Res.	Res.	Res.	Res.	Res.	Res.	Res.	Res.
15	14	13	12	11	10	9	8	7	6	5	4	3	2	1	0
Res.	Res.	IPCCDBA[13:0]													
		r	r	r	r	r	r	r	r	r	r	r	r	r	r

Bits 31:14 Reserved, must be kept at reset value.

Bits 13:0 **IPCCDBA[13:0]:** IPCC mailbox data buffer base address offset
IPCCDBA contains the first double-word offset of the IPCC mailbox data buffer area in SRAM2.

Secure flash memory start address option bytes

Flash memory address: 0x1FFF 7870

Reset value: 0bxxxx xxxx xxxx xxxx xxx1 xxx0 xxxx xxxx (ST production value)

31	30	29	28	27	26	25	24	23	22	21	20	19	18	17	16
Res.	Res.	Res.	Res.	Res.	Res.	Res.	Res.	Res.	Res.	Res.	Res.	Res.	Res.	Res.	Res.
15	14	13	12	11	10	9	8	7	6	5	4	3	2	1	0
Res.	Res.	Res.	DDS	Res.	Res.	Res.	FSD	SFSA[7:0]							
			r				r	r	r	r	r	r	r	r	r

Bits 31:13 Reserved, must be kept at reset value.

Bit 12 **DDS:** Disable CPU2 debug access
0: CPU2 debug access enabled.
1: CPU2 debug access disabled.

Bits 11:9 Reserved, must be kept at reset value.

Bit 8 **FSD:** Flash security disable
FSD = 1: System and flash non-secure
FSD = 0: System and flash secure. SFSA[7:0] contains the start address of the first 2 Kbytes page of the secure flash area.

Bits 7:0 **SFSA[7:0]:** Secure flash start address
System and flash secure. SFSA[7:0] contains the start address of the first 2 Kbytes page of the secure flash area.

Secure SRAM2 start address and CPU2 reset vector option bytes

Flash memory address: 0x1FFF 7878

Reset value: 0xXXXX XXXX (ST production value)

31	30	29	28	27	26	25	24	23	22	21	20	19	18	17	16
C2OPT	BRSD_B	Res.	Res.	Res.	SBRSA_B[1:0]		Res.	BRSD_A	SBRSA_A[4:0]					Res.	SBRV[16]
r	r				r	r		r	r	r	r	r	r		r
15	14	13	12	11	10	9	8	7	6	5	4	3	2	1	0
SBRV[15:0]															
r	r	r	r	r	r	r	r	r	r	r	r	r	r	r	r

Bit 31 **C2OPT:** CPU2 boot reset vector memory selection.
0: SBRV offset addresses SRAM1 or SRAM2, from start address 0x2000 0000 (SBRV value must be kept within the SRAM area).
1: SBRV offset addresses flash memory, from start address 0x0800 0000.

Bit 30 **BRSD_B:** Backup SRAM2b security disable
BRSD_B = 1: SRAM2b is non-secure
BRSD_B = 0: SRAM2b is secure. SBRSA_B contains the start address of the first 1 Kbyte page of the secure backup SRAM2b area.

Bits 29:27 Reserved, must be kept at reset value.

Bits 26:25 **SBRSA_B:** Secure backup SRAM2b start address
BRSD_B = 0: SRAM2b is secure. SBRSA_B[1:0] contains the start address of the first 1 Kbyte page of the secure backup SRAM2b area.

Bit 24 Reserved, must be kept at reset value.

Bit 23 **BRSD_A:** Backup SRAM2a security disable
BRSD_A = 1: SRAM2a is non-secure
BRSD_A = 0: SRAM2a is secure. SBRSA_A[4:0] contains the start address of the first 1 Kbyte page of the secure backup SRAM2a area.

Bits 22:18 **SBRSA_A:** Secure backup SRAM2a start address
BRSD_A = 0: SRAM2a is secure. SBRSA_A[4:0] contains the start address of the first 1 Kbyte page of the secure backup SRAM2a area.

Bit 17 Reserved, must be kept at reset value.

Bits 16:0 **SBRV[17:0]:** CPU2 boot reset vector
Contains the word aligned CPU2 boot reset start address offset within the selected memory area by C2OPT.

3.4.2 Option bytes programming

After reset, the options related bits in the *Flash memory control register (FLASH_CR)* and *Flash memory CPU2 control register (FLASH_C2CR)* are write-protected. To run any operation on the option bytes page, the option lock bit OPTLOCK in the *Flash memory control register (FLASH_CR)* must be cleared. The following sequence is used to unlock this register:

1. Unlock the FLASH_CR with the LOCK clearing sequence (refer to *Unlocking the flash memory*)
2. Write OPTKEY1= 0x08192A3B in the *Flash memory option key register (FLASH_OPTKEYR)*
3. Write OPTKEY2 = 0x4C5D6E7F in the *Flash memory option key register (FLASH_OPTKEYR)*

Any wrong sequence locks up the flash memory option registers until the next system reset. In the case of a wrong key sequence, a bus error is detected and a hard fault interrupt is generated.

The user options can be protected against unwanted erase/program operations by setting the OPTLOCK bit by software.

Note: If LOCK is set by software, OPTLOCK is automatically set as well.

Note: In a multi-CPU system it is good practice to use semaphores to manage option programming, and prevent simultaneous option programming by the CPUs.

Modifying user options

The option bytes are programmed differently from a main memory user address.

To modify the value of user options follow the procedure below:

1. Clear OPTLOCK option lock bit with the clearing sequence described above
2. Write the desired options value in the options registers.
3. Check that no flash memory operation is on going by checking the BSY bit in the *Flash memory status register (FLASH_SR)* or *Flash memory CPU2 status register (FLASH_C2SR)*.
   Check that flash program and erase operation is allowed by checking the PESD bit in the *Flash memory status register (FLASH_SR)* or *Flash memory CPU2 status register (FLASH_C2SR)* (these checks are recommended even if status may change due to flash operation requests by the other CPU, to limit the risk of receiving a bus error when modifying user options).
4. Set the Options start bit OPTSTRT in the *Flash memory control register (FLASH_CR)*.
5. Wait for the BSY bit to be cleared.

Note: Any modification of the value of one option is automatically performed by erasing user option bytes pages first, and then programming all the option bytes with the values contained in the flash memory option registers.

Secure user options

The secure option bytes *Secure flash memory start address register (FLASH_SFR)* and *Flash memory secure SRAM2 start address and CPU2 reset vector register (FLASH_SRRVR)* can only be written by the secure CPU2.

Option byte loading

After the BSY bit is cleared, all new options are updated into the flash memory, but not applied to the system. A read from the option registers returns the last loaded option byte values, the new options have effect on the system only after they are loaded.

Option bytes loading is performed in two cases:

- when OBL_LAUNCH bit is set in the *Flash memory control register (FLASH_CR)*
- after a power reset (BOR reset or exit from Standby/Shutdown modes)

Option byte loader performs a read of the options block and stores the data into internal option registers. These internal registers configure the system and can be read by software. Setting OBL_LAUNCH generates a reset so the option byte loading is performed under system reset.

Each option bit has also its complement in the same double word. During option loading, a verification of the option bit and its complement allows to check the loading has correctly taken place.

During option byte loading, the options are read by double word. ECC on option words is not taken into account during OBL, but only during direct SW read of option area.

If the word and its complement are matching, the option word/byte is copied into the option register.

If the comparison between the word and its complement fails, a status bit OPTVERR is set. Mismatch values are forced into the option registers:

- for USR OPT option, the value of mismatch is all options at '1', except for BOR_LEV that is "000" (lowest threshold)
- for WRP option, the value of mismatch is the default value "No protection"
- for RDP option, the value of mismatch is the default value "Level 1"
- for PCROP, the value of mismatch is "all memory protected"
- for FSD and SFSA option, the value of mismatch is "all memories (Flash, SRAM2a and SRAM2b) secured"
- for BRSD, SBRSA_A, BRSD_B and SBRSA_B options, the value of mismatch is "SRAM2 memory part secured"
- for DDS option, the value of mismatch is "CPU2 debug disabled"
- for C2OPT and SBRV options, the value of mismatch is "CPU2 boot from start address of last Flash page (safe boot)"
- for OPTVAL option, the value of mismatch is "not valid".

If the OPTVAL option indicates "not valid" all memories (Flash, SRAM2a and SRAM2b) are secure.

Table 10. Option loading control

OPTVERR	OPTNV	Description
0	0	Options correctly loaded and OPTVAL is "valid". – Security applied according to options.
0	1	Does not occur
1	0	OPTVAL option correctly loaded as "valid", but some or all other option and engineering bits corrupted, mismatch values loaded. – When secure option is loaded correctly, security is applied according to the loaded secure option values. – When secure option is corrupted, security is applied on the full memory as indicated by the loaded mismatch value.
1	1	Some or all option and engineering bits corrupted, mismatch values loaded. OPTVAL correctly loaded as "not valid". Security applied on full memories irrespective of the loaded secure option values.

On system reset rising, internal option registers are copied into option registers that can be read and written by software:

- FLASH_OPTR
- FLASH_PCROPxySR (x = 1 and y = A or B)
- FLASH_PCROPxyER (x = 1 and y = A or B)
- FLASH_WRPxyR (x = 1 and y = A or B)
- FLASH_IPCCDBA
- FLASH_SFR
- FLASH_SRRVA

These registers are also used to modify options. If these registers are not modified by user, they reflect the options states of the system. See *Modifying user options* for more details.

3.5 FLASH UID64

A 64-bit unique device identification (UID64) is stored in the flash memory, and can be accessed by the CPUs.

Table 11. UID64 organization

Address	31	30	29	28	27	26	25	24	23	22	21	20	19	18	17	16	15	14	13	12	11	10	9	8	7	6	5	4	3	2	1	0
0x1FFF 7580	Unique device number																															
0x1FFF 7584	ST company ID																								Device ID							

The UID64 is programed at device production, and provides a unique code for each device

- the 24-bit ST company ID returns 0x00 80 E1
- the 8-bit device ID returns 0x21 for revision B, 0x22 for revision Z, as indicated in DBGMCU_IDCODE
- the 32-bit unique device number is a sequential number, different for each individual device.

3.6 Flash memory protection

The flash main memory can be protected against external accesses with the Read protection (RDP). The pages can also be protected against unwanted write (WRP) due to loss of program counter context. The write-protection WRP granularity is 2 Kbytes. Apart from the RDP and WRP, flash memory can also be protected against read and write from third parties (PCROP). The PCROP granularity is 1 Kbyte.

Part of the flash main memory can be secured. It grants exclusive access to this part of the memory to the CPU2.

3.6.1 Read protection (RDP)

The read protection is activated by setting the RDP option byte and then, by applying a system reset to reload the new RDP option byte. The read protection protects the flash main memory, the option bytes, the backup registers (RTC_BKPxR in the RTC) and the SRAM2.

Note: If the read protection is set while the debugger is still connected (or was connected since the last power on) through JTAG/SWD, apply a POR (power-on reset) instead of a system reset. If the read protection is programmed through software, do not set the OBL_LAUNCH bit (FLASH_CR register), but perform a POR to reload the option byte. This can be done with a transition to Standby (or Shutdown) mode, followed by a wake-up.

There are three levels of read protection from no protection (Level 0) to maximum protection or no debug (Level 2).

The flash memory is protected when the RDP option byte and its complement contain the pair of values shown in *Table 12*.

Table 12. Flash memory read protection status

RDP byte value	RDP complement value	Read protection level
0xAA	0x55	Level 0
Any value except 0xAA or 0xCC	Any value (not necessarily complementary), except 0x55 and 0x33	Level 1 (default)
0xCC	0x33	Level 2

The System memory area is read accessible whatever the protection level. It is never accessible for program/erase operation.

Level 0: No protection

Read, program and erase operations into the flash main memory area are possible. The option bytes, the SRAM2 and the backup registers are also accessible by all operations.

Level 1: Read protection

This is the default protection level when RDP option byte is erased. It is defined as well when RDP value is at any value different from 0xAA and 0xCC, or even if the complement is not correct.

- **User mode:** Code executing in user mode (**Boot flash**) can access flash main memory, option bytes, SRAM2 and backup registers with all operations.
- **Debug, boot RAM and boot loader modes:** In debug mode or when code is running from boot RAM or boot loader, the flash main memory, the backup registers (RTC_BKPxR in the RTC) and the SRAM2 are totally inaccessible. In these modes, a read or write access to the flash memory generates a bus error and a hard fault interrupt.

Caution: In case the Level 1 is configured and no PCROP areas are defined, it is mandatory to set PCROP_RDP bit to 1 (full mass erase when the RDP level is decreased from Level 1 to Level 0). In case the Level 1 is configured and a PCROP area is defined, if user code needs to be protected by RDP but not by PCROP, it must not be placed in a page containing a PCROP area.

Level 2: No debug

In this level, the protection Level 1 is guaranteed. In addition, the CPU1 and CPU2 debug port, the boot from RAM (boot RAM mode) and the boot from System memory (boot loader mode) are no more available. In user execution mode (boot FLASH mode), all operations are allowed on the flash main memory. On the contrary, only read and secure write operations can be performed on the option bytes. Option bytes, can only be programmed and erased by a secure CPU2.

The Level 2 cannot be removed from the non-secure application side: it is an irreversible operation. When attempting to modify the options bytes, the protection error flag WRPERR is set in the FLASH_xxxSR register and an interrupt can be generated.

Note: The debug feature is also disabled under reset.

Note: STMicroelectronics is not able to perform analysis on defective parts on which the Level 2 protection has been set.

Changing the Read protection level

It is easy to move from Level 0 to Level 1 by changing the value of the RDP byte to any value (except 0xCC). By programming the 0xCC value in the RDP byte, it is possible to go to level 2 either directly from Level 0 or from Level 1. Once in Level 2 it is no more possible to modify the Read protection level.

When the RDP is reprogrammed to the value 0xAA to move from Level 1 to Level 0, a mass erase of the flash main memory is performed if PCROP_RDP is set in the *Flash memory PCROP zone A end address register (FLASH_PCROP1AER)*. The backup registers (RTC_BKPxR in the RTC), the SRAM2 and the PKA SRAM are also erased. The user options (except PCROP protection) are set to their previous values copied from FLASH_OPTR, FLASH_WRPxyR (x = 1 and y = A or B). PCROP is disabled. The OTP area is not affected by mass erase and remains unchanged.

If the bit PCROP_RDP is cleared in the FLASH_PCROP1AER, the full mass erase is replaced by a partial mass erase that is successive page erases, except for the pages protected by PCROP. This is done in order to keep the PCROP code. Only when the flash

memory is erased, options are re-programmed with their previous values. This is also true for FLASH_PCROPxySR and FLASH_PCROPxyER registers (x = 1 and y = A or B).

A requested mass erase performs a partial mass erase (a sequence of page erases), except for the pages protected by CPU2 security (SFSA). This is done to keep the CPU2 secure code.

Table 13. RDP regression from Level 1 to Level 0 and memory erase

<table>
<tr><th>SFSA</th><th>PCROP</th><th>PCROP_RDP</th><th>Comment</th></tr>
<tr><td rowspan="4">Partial</td><td>None</td><td>x</td><td rowspan="2">Flash memory multiple page erase of all non-secure pages, SRAM2, PKA RAM, and backup registers erase (secure flash pages conserved).</td></tr>
<tr><td rowspan="2">Partial</td><td>1</td></tr>
<tr><td rowspan="2">0</td><td>Flash memory multiple page erase of all non-PCROP pages and non-secure pages, SRAM2, PKA RAM, and backup registers erase (PCROP flash memory pages and secure flash memory pages conserved).</td></tr>
<tr><td>Complete non-secure</td><td>Flash memory, SRAM2, and PKA RAM and backup registers are conserved.</td></tr>
<tr><td>Complete flash memory</td><td>x</td><td>x</td><td>Flash memory, SRAM2, and PKA RAM and backup registers are conserved.</td></tr>
</table>

Note: Partial mass erase is performed only when Level 1 is active and Level 0 requested. When the protection level is increased (0→1, 1→2, 0→2) there is no mass erase.

To validate the protection level change, the option bytes must be reloaded through the OBL_LAUNCH bit in flash memory control register.

Figure 4. Changing the Read protection (RDP) level

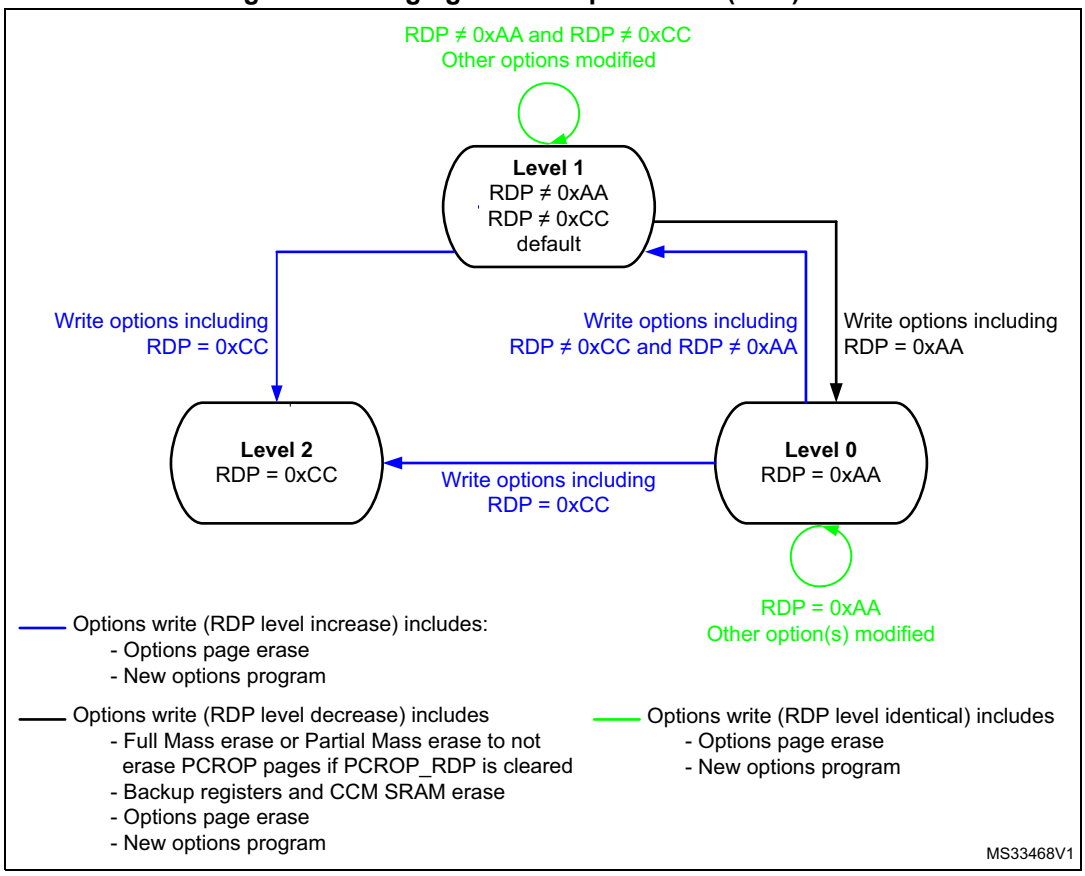

Table 14. Access status vs. protection level and execution modes

Area	Protection level	User execution (BootFromFlash memory)			Debug / BootFromRam / BootFromLoader		
		Read	Write	Erase	Read	Write	Erase
Flash main memory	1	Yes	Yes	Yes	No	No	No(4)
	2	Yes	Yes	Yes	N/A(1)	N/A(1)	N/A(1)
System memory(2)	1	Yes	No	No	Yes	No	No
	2	Yes	No	No	N/A(1)	N/A(1)	N/A(1)
Option bytes	1	Yes	Yes(3)	Yes	Yes	Yes(3)	Yes
	2	Yes	CPU1 and CPU2 none secure - No CPU2 secure - Yes	CPU1 and CPU2 none secure - No CPU2 secure - Yes	N/A(1)	N/A(1)	N/A(1)
Backup registers	1	Yes	Yes	N/A	No	No	No(4)
	2	Yes	Yes	N/A	N/A(1)	N/A(1)	N/A(1)
SRAM2	1	Yes	Yes	N/A	No	No	No(5)
	2	Yes	Yes	N/A	N/A(1)	N/A(1)	N/A(1)

1. When the protection Level 2 is active, the Debug port, the boot from RAM and the boot from system memory are disabled.
2. The system memory is only read-accessible, whatever the protection level (0, 1 or 2) and execution mode.

3. The flash non secure main memory is erased when the RDP option byte is programmed with all level of protections disabled (0xAA). The flash secure main memory is also erased when the SFSA option byte is programmed to be non-secure and at the same time the RDP option byte is programmed with all level protections disabled (0xAA).
4. The backup registers are erased when RDP changes from Level 1 to Level 0.
5. The SRAM2 is erased when RDP changes from Level 1 to Level 0.

3.6.2 Proprietary code readout protection (PCROP)

Two parts of the flash memory can be protected against read and write from third parties.

The protected area is execute-only: it can only be reached by the STM32 CPUs, with an instruction code, while all other accesses (DMA, debug and CPU data read, write and erase) are strictly prohibited. The PCROP areas have a 1 Kbyte granularity. An additional option bit (PCROP_RDP) makes it possible to select if the PCROP area is erased or not when the RDP protection is changed from Level 1 to Level 0 (refer to *Changing the Read protection level*).

Each PCROP area is defined by a start page offset and an end page offset into the flash memory. These offsets are defined in the PCROP address registers *Flash memory PCROP zone A start address register (FLASH_PCROP1ASR)*, *Flash memory PCROP zone A end address register (FLASH_PCROP1AER)*, *Flash memory PCROP zone B start address register (FLASH_PCROP1BSR)* and *Flash memory PCROP zone B end address register (FLASH_PCROP1BER)*.

A PCROP area is defined from the address *Flash memory Base address + [PCROPxy_STRT x 0x400]* (included) to the address: *Flash memory Base address + [(PCROPxy_END+1) x 0x400]* (excluded). The minimum PCROP area size is two PCROP pages (2 Kbytes) *PCROPxy_END = PCROPxy_STRT + 1*.

When *PCROPxy_END = PCROPxy_STRT* the full flash memory is PCROP protected.

For example, to protect by PCROP from the address 0x0806 2F80 (included) to the address 0x0807 0004 (included):

- if boot in flash memory is selected, one of the FLASH_PCROPxySR and FLASH_PCROPxyER registers (x = 1 and y = A or B) must be programmed with:
  - PCROPxy_STRT = 0x18B (PCROP area first address 0x0806 2C00)
  - PCROPxy_END = 0x1C0 (PCROP area last address 0x0807 03FF)

Any data read access performed through a PCROP protected area triggers the RDERR flag error.

Any PCROP protected address is also write protected and any write access to one of these addresses triggers WRPERR.

Any PCROP area is also erase protected. Consequently, any erase to a page in this zone is impossible (including the page containing the start address and the end address of this zone). Moreover, a software mass erase cannot be performed if one zone is PCROP protected.

In the previous example, due to erase by page, all pages from page 0x18A to 0x1C0 are protected in case of page erase, all addresses from 0x0806 2C00 to 0x0807 03FF cannot be erased.

Deactivation of PCROP can only occur when the RDP is changing from Level 1 to Level 0. If the user options modification tries to clear PCROP or to decrease the PCROP areas, the

options programming is launched but PCROP areas stays unchanged. On the contrary, it is possible to increase the PCROP areas.

When option bit PCROP_RDP is cleared, and when the RDP is changing from Level 1 to Level 0, Full mass erase is replaced by Partial mass erase to preserve the PCROP area (refer to *Changing the Read protection level*). In this case, PCROPxy_STRT and PCROPxy_END (x = 1 and y = A or B) are not erased.

Table 15: PCROP protection

PCROP registers values (x = 1 and y = A or B)	PCROP protection area
PCROPxy_STRT = PCROPxy_END	The full flash memory is PCROP protected
PCROPxy_STRT > PCROPxy_END	No PCROPxy, unprotected
PCROPxy_STRT < PCROPxy_END	Pages from PCROPxy_STRT to PCROPxy_END are protected

Note: It is recommended to align PCROP areas with page granularity when using PCROP_RDP, or to leave free the rest of the page where PCROP zones start or end.

3.6.3 Write protection (WRP)

The user area in flash memory can be protected against unwanted write operations. Two write-protected (WRP) areas can be defined, with page (2 Kbytes) granularity. Each area is defined by a start page offset and an end page offset related to the physical flash memory base address. These offsets are defined in the WRP address registers *Flash memory WRP area A address register (FLASH_WRP1AR)* and *Flash memory WRP area B address register (FLASH_WRP1BR)*.

The WRP “y” area (y = A, B) is defined from the address *Flash memory Base address + [WRP1y_STRT x 0x800]* (included) to the address *Flash memory Base address + [(WRP1y_END+1) x 0x800]* (excluded). The minimum WRP area size is one WRP page (4 Kbytes), *WRP1y_END = WRP1y_STRT*.

For example, to protect by WRP from the address 0x0806 2000 (included) to the address 0x0807 1FFF (included):

- If boot in flash memory is selected, FLASH_WRP1AR register must be programmed with:
  - WRP1A_STRT = 0xC4.
  - WRP1A_END = 0xE3.

  WRP1B_STRT and WRP1B_END in FLASH_WRP1BR can be used instead (area “B” in flash memory).

When WRP is active, it cannot be erased or programmed. Consequently, a software mass erase cannot be performed if one area is write-protected.

If an erase/program operation to a write-protected part of the flash memory is attempted, the write protection error flag (WRPERR) is set in the FLASH_SR register. This flag is also set for any write access to:

- OTP area
- part of the flash memory that can never be written like the ICP
- PCROP area.

Note: When the flash memory read protection level is selected (RDP level = 1), it is not possible to program or erase the memory if the CPU debug features are connected (JTAG or single wire) or boot code is being executed from RAM or system flash memory, even if WRP is not activated. Any attempt generates an hard fault (BusFault).

Table 16: WRP protection

WRP registers values (x = 1 and y = A or B)	WRP protection area
WRPxy_STRT = WRPxy_END	Page WRPxy is protected
WRPxy_STRT > WRPxy_END	No WRP, unprotected
WRPxy_STRT < WRPxy_END	Pages from WRPxy_STRT to WRPxy_END are protected

Note: To validate the WRP options, the option bytes must be reloaded through the OBL_LAUNCH bit in flash memory control register.

3.6.4 CPU2 security (ESE)

All or a part of the flash memory and the SRAM2a and SRAM2b can be made secure, exclusively accessible by the CPU2, protected against execution, read and write from third parties. Only the CPU2 can execute, read and write in these areas. It can only be reached by the CPU2, while all other accesses (CPU1 and DMA) are strictly prohibited.

Changing the CPU2 security mode

CPU2 security start address can be modified by the secure CPU2 by loading a new user option SFSA.

CPU2 secure flash memory area

The CPU2 secure flash memory area has sector (2 Kbytes) granularity and is defined by the secure flash memory start page offset user option (SFSA) into the flash memory. This offset is controlled from the SFSA field in the *Secure flash memory start address register (FLASH_SFR)*.

The CPU2 secure flash memory area is defined as follows: *Flash memory Base address + [SFSA x 0x800] (included)* to the last flash memory address: When CPU2 security is enabled, the minimum CPU2 secure area size is one sector (2 Kbytes).

For example, a CPU2 secure area from the address 0x080E 7000 (included) to the address 0x0804 FFFF (included):

- FLASH_SFR registers must be programmed with:
  - SFSA= 0x1CE.

A flag (ESE) is available from the *Flash memory option register (FLASH_OPTR)* informing that CPU2 security is enabled.

Any CPU1 access to a CPU2 security area triggers RDERR or WRPERR flag error.

CPU2 secure SRAM2 areas

The CPU2 secure SRAM2a and SRAM2b areas have a 1 Kbyte granularity and are defined by the secure backup RAM (SRAM2a) start address user options (BRSD_A and SBRSA_A) and the secure backup RAM (SRAM2b) start address user options (BRSD_B and SBRSA_B) into the flash memory. These offset are controlled by the SBRSA_A and

SBRSA_B fields in the *Flash memory secure SRAM2 start address and CPU2 reset vector register (FLASH_SRRVR)*.

The CPU2 secure SRAM2a area is defined as *Backup SRAM2a Base address + [SBRSA_A x 0x0400]* (included) to the last SRAM2a address.

As an example, for a CPU2 secure SRAM2a area from the address 0x2003 5000 (included) to the address 0x2003 7FFF (included) FLASH_SRRVR registers must be programmed with SBRSA_A = 0x14 ((0x2003 5000 - 0x2003 0000 (backup SRAM2a base address) / 0x0400 (1 KB page size)).

Any CPU1 read access returns no data, and a write access to a CPU2 security SRAM2a area is discarded and triggers a bus error.

When BRSD_A is set to 1 the SRAM2a is non-secure.

The CPU2 secure backup SRAM2b area is defined as *backup SRAM2b base address + [SBRSA_B x 0x0400]* (included) to the last SRAM2b address.

As an example, for a CPU2 secure SRAM2b area from the address 0x2003 8800 (included) to the address 0x2003 8FFF (included) FLASH_SRRVR registers must be programmed with SBRSA_B = 0x2 ((0x2003 8800 - 0x2003 8000 (backup SRAM2b base address) / 0x0400 (1 KB page size)).

Any CPU1 read access returns no data. A write access to a CPU2 security SRAM2b area is discarded and triggers a bus error.

When BRSD_B is set to 1 the SRAM2b is non-secure.

CPU2 debug access

Debug access to the CPU2 is disabled, as indicated by the DDS filed in the *Secure flash memory start address register (FLASH_SFR)*. The debugger has no access to the CPU2 and the secure peripherals and memory areas.

3.7 FLASH program/erase suspension

Flash memory program and erase operations can be suspended by setting the PES bit in the *Flash memory access control register (FLASH_ACR)* or *Flash memory CPU2 access control register (FLASH_C2ACR)*. This feature is useful when executing time critical sections by a CPU. It makes it possible to suspend any new program or erase operation from being started, preventing CPU instruction and data fetches from being blocked.

When at least one PES bit is set:

- Any ongoing program or erase operation is completed.
  - The maximum latency for a flash memory program erase suspension is the maximum time for one program or erase operation to complete (see the device datasheet for more information on the program and erase timing).
- All new requested program and erase operations are not started, but suspended.
  - PESD bits in the *Flash memory status register (FLASH_SR)* and *Flash memory CPU2 status register (FLASH_C2SR)* are set as soon as any PES is set, no matter if a program/erase is currently suspended. This allows a CPU to test PESD prior to requesting a program or an erase operation.

When all PES bits are reset to 0:

- A suspended program or erase operation is started.
  - The PESD bit in both the *Flash memory status register (FLASH_SR)* and in the *Flash memory CPU2 status register (FLASH_C2SR)* are cleared.

3.8 FLASH interrupts

Table 17. Flash memory interrupt requests

Interrupt event	Event flag	Event flag/interrupt clearing method	Interrupt enable control bit
End of operation	EOP(1)	Write EOP = 1	EOPIE
Operation error	OPERR(2)	Write OPERR = 1	ERRIE
Read protection error	RDERR	Write RDERR = 1	RDERRIE
Write protection error	WRPERR	Write WRPERR = 1	N/A
Size error	SIZERR	Write SIZERR = 1	N/A
Programming sequential error	PROGERR	Write PROGERR = 1	N/A
Programming alignment error	PGAERR	Write PGAERR = 1	N/A
Programming sequence error	PGSERR	Write PGSERR = 1	N/A
Data miss during fast programming error	MISSERR	Write MISSERR = 1	N/A
Fast programming error	FASTERR	Write FASTERR = 1	N/A
ECC error correction	ECCC	Write ECCC = 1	ECCCIE
ECC double error (NMI)	ECCD	Write ECCD = 1	N/A

1. EOP is set only if EOPIE is set.
2. OPERR is set only if ERRIE is set.

Note: The flash interface provides only a single interrupt line to both CPUs. It is good practice to manage flash operations between the CPUs using a semaphore. To avoid receiving unwanted flash operation interrupts, the CPU must mask the flash interrupt in the NVIC or SYSCFG pre-mask.

3.9 Register access protection

The user options registers can be protected by security.

The FLASH secure registers (FSD, SFSA, BRSD_A, SBRSA_A, BRSD_B, SBRSA_B, SBRV, C2OPT, and DDS) are secure and can be written only by the secure CPU2 and read by any CPU, secure and non-secure. When the CPU1 tries to write, the write is discarded.

3.10 FLASH registers

3.10.1 Flash memory access control register (FLASH_ACR)

Address offset: 0x000

Reset value: 0x0000 0600

31	30	29	28	27	26	25	24	23	22	21	20	19	18	17	16
Res.	Res.	Res.	Res.	Res.	Res.	Res.	Res.	Res.	Res.	Res.	Res.	Res.	Res.	Res.	EMPTY
															rw

15	14	13	12	11	10	9	8	7	6	5	4	3	2	1	0
PES	Res.	Res.	DCRST	ICRST	DCEN	ICEN	PRFTEN	Res.	Res.	Res.	Res.	Res.	LATENCY[2:0]		
rw			rw	rw	rw	rw	rw						rw	rw	rw

Bits 31:17 Reserved, must be kept at reset value.

Bit 16 **EMPTY**: Flash memory user area empty.

When read indicates whether the first location of the user flash memory is erased or has a programmed value.

0: Read: User flash memory programmed

1: Read: User flash memory empty

When written this bit is overwritten with the written value.

Bit 15 **PES**: CPU1 program / erase suspend request

0: Flash memory program and erase operations granted.

1: Any new flash memory program and erase operation is suspended until this bit and the same bit in *Flash memory CPU2 access control register (FLASH_C2ACR)* are cleared. The PESD bit in both the *Flash memory status register (FLASH_SR)* and *Flash memory CPU2 status register (FLASH_C2SR)* is set when at least one PES bit in FLASH_ACR or FLASH_C2ACR is set.

Bits 14:13 Reserved, must be kept at reset value.

Bit 12 **DCRST**: CPU1 Data cache reset

0: CPU1 Data cache is not reset

1: CPU1 Data cache is reset

This bit can be written only when the data cache is disabled.

Bit 11 **ICRST**: CPU1 Instruction cache reset

0: CPU1 Instruction cache is not reset

1: CPU1 Instruction cache is reset

This bit can be written only when the instruction cache is disabled.

Bit 10 **DCEN**: CPU1 Data cache enable

0: CPU1 Data cache is disabled

1: CPU1 Data cache is enabled

Bit 9 **ICEN**: CPU1 Instruction cache enable

0: CPU1 Instruction cache is disabled

1: CPU1 Instruction cache is enabled

Bit 8 **PRFTEN:** CPU1 Prefetch enable

0: CPU1 Prefetch disabled

1: CPU1 Prefetch enabled

Bits 7:3 Reserved, must be kept at reset value.

Bits 2:0 **LATENCY[2:0]**: Latency

These bits represent the ratio of the flash memory HCLK clock period to the flash memory access time.

000: Zero wait states
001: One wait state
010: Two wait states
011: Three wait states
Others: Reserved

3.10.2 Flash memory key register (FLASH_KEYR)

Address offset: 0x008

Reset value: 0x0000 0000

31	30	29	28	27	26	25	24	23	22	21	20	19	18	17	16
KEY[31:16]															
w	w	w	w	w	w	w	w	w	w	w	w	w	w	w	w
15	14	13	12	11	10	9	8	7	6	5	4	3	2	1	0
KEY[15:0]															
w	w	w	w	w	w	w	w	w	w	w	w	w	w	w	w

Bits 31:0 **KEY[31:0]**: Flash memory key

The following values must be written consecutively to unlock the *Flash memory control register (FLASH_CR)* and *Flash memory CPU2 control register (FLASH_C2CR)*, thus enabling programming/erasing operations:

KEY1: 0x4567 0123
KEY2: 0xCDEF 89AB

3.10.3 Flash memory option key register (FLASH_OPTKEYR)

Address offset: 0x00C

Reset value: 0x0000 0000

31	30	29	28	27	26	25	24	23	22	21	20	19	18	17	16
OPTKEY[31:16]															
w	w	w	w	w	w	w	w	w	w	w	w	w	w	w	w
15	14	13	12	11	10	9	8	7	6	5	4	3	2	1	0
OPTKEY[15:0]															
w	w	w	w	w	w	w	w	w	w	w	w	w	w	w	w

Bits 31:0 **OPTKEY[31:0]**: Option byte key

The following values must be written consecutively to unlock the flash memory option registers, enabling option byte programming/erasing operations:

KEY1: 0x0819 2A3B
KEY2: 0x4C5D 6E7F

3.10.4 Flash memory status register (FLASH_SR)

Address offset: 0x010

Reset value: 0x000X 0000

31	30	29	28	27	26	25	24	23	22	21	20	19	18	17	16
Res.	Res.	Res.	Res.	Res.	Res.	Res.	Res.	Res.	Res.	Res.	Res.	PESD	CFGBSY	Res.	BSY
												r	r		r
15	14	13	12	11	10	9	8	7	6	5	4	3	2	1	0
OPTV ERR	RD ERR	OPTNV	Res.	Res.	Res.	FAST ERR	MISS ERR	PGS ERR	SIZ ERR	PGA ERR	WRP ERR	PROG ERR	Res.	OP ERR	EOP
rc_w1	rc_w1	r				rc_w1	rc_w1	rc_w1	rc_w1	rc_w1	rc_w1	rc_w1		rc_w1	rc_w1

Bits 31:20 Reserved, must be kept at reset value.

Bit 19 **PESD**: Programming/erase operation suspended

This bit is set and reset by hardware.

Set when at least one PES bit in either *Flash memory access control register (FLASH_ACR)* or *Flash memory CPU2 access control register (FLASH_C2ACR)* is set.

Cleared when both PES bits in FLASH_ACR and FLASH_C2ACR are cleared.

When set, new program or erase operations are not started.

Bit 18 **CFGBSY**: Programming or erase configuration busy

This flag is set and reset by hardware:

- set when first word is sent for program, or when setting STRT for erase
- reset when operation completes or is interrupted by an error.

When set to 1, any other operation launch through *Flash memory control register (FLASH_CR)* is impossible and must be postponed (a programming or erase operation is ongoing). When reset to 0, programming and erase settings in *Flash memory control register (FLASH_CR)* can be modified.

Bit 17 Reserved, must be kept at reset value.

Bit 16 **BSY**: Busy

Indicates that a flash memory operation requested by *Flash memory control register (FLASH_CR)* is in progress. This bit is set at the beginning of a flash memory operation, and reset when the operation finishes or when an error occurs.

Bit 15 **OPTVERR**: Option and Engineering bits loading validity error

Set by hardware when the options and engineering bits read may not be the one configured by the user or production. If options and engineering bits have not been properly loaded, OPTVERR is set again after each system reset. Option bytes that fail loading are forced to a safe value, see *Section 3.4.2: Option bytes programming*.

Cleared by writing 1.

Bit 14 **RDERR**: PCROP read error

Set by hardware when an address to be read through the D-bus belongs to a read protected area of the flash memory (PCROP protection). An interrupt is generated if RDERRIE is set in FLASH_CR.

Cleared by writing 1.

Bit 13 **OPTNV**: User option OPTVAL indication

This bit is set and reset by hardware.

0: The OBL user option OPTVAL indicates “valid”.

1: The OBL user option OPTVAL indicates “not valid”.

Bits 12:10 Reserved, must be kept at reset value.

Bit 9 **FASTERR**: Fast programming error

Set by hardware when a fast programming sequence (activated by FSTPG) is interrupted due to an error (alignment, size, write protection or data miss). The corresponding status bit (PGAERR, SIZERR, WRPERR or MISSERR) is set at the same time.
Cleared by writing 1.

Bit 8 **MISSERR**: Fast programming data miss error

In fast programming mode, 64 double words (512 bytes) must be sent to flash memory successively, and the new data must be sent to the logic control before the current data is fully programmed. MISSERR is set by hardware when the new data is not present in time.
Cleared by writing 1.

Bit 7 **PGSERR**: Programming sequence error

Set by hardware when a write access to the flash memory is performed by the code while PG or FSTPG have not been set previously. Set also by hardware when PROGERR, SIZERR, PGAERR, WRPERR, MISSERR or FASTERR is set due to a previous programming error.
Cleared by writing 1.

Bit 6 **SIZERR**: Size error

Set by hardware when the size of the access is a byte or half-word during a program or a fast program sequence. Only double word programming is allowed (consequently: word access).
Cleared by writing 1.

Bit 5 **PGAERR**: Programming alignment error

Set by hardware when the data to program cannot be contained in the same double word (64-bit) flash memory in case of standard programming, or if there is a change of page during fast programming.
Cleared by writing 1.

Bit 4 **WRPERR**: Write protection error

Set by hardware when an address to be erased/programmed belongs to a write-protected part (by WRP, PCROP or RDP Level 1) of the flash memory.
Cleared by writing 1.

Bit 3 **PROGERR**: Programming error

Set by hardware when a double-word address to be programmed contains a value different from 0xFFFF FFFF FFFF FFFF before programming, except if the data to write is 0x0000 0000 0000 0000.
Cleared by writing 1.

Bit 2 Reserved, must be kept at reset value.

Bit 1 **OPERR**: Operation error

Set by hardware when a flash memory operation (program / erase) completes unsuccessfully.
This bit is set only if error interrupts are enabled (ERRIE = 1).
Cleared by writing ‘1’.

Bit 0 **EOP**: End of operation

Set by hardware when one or more flash memory operation (programming / erase) has been completed successfully.
This bit is set only if the end of operation interrupts are enabled (EOPIE = 1).
Cleared by writing 1.

3.10.5 Flash memory control register (FLASH_CR)

Address offset: 0x014

Reset value: 0xC000 0000

Access: no wait state when no flash memory operation is on going, word, half-word and byte access.

This register must not be modified when CFGBSY in *Flash memory status register (FLASH_SR)* is set. This would result in:

- a bus error, if CFGBSY is set due to a double-word programming sequence and the write to FLASH_CR is performed after the first word is sent for programming and before the second.
- a bus stall, if CFGBSY is set for any other reason
  - When the PESD bit in *Flash memory status register (FLASH_SR)* is cleared, the register write access is stalled until the CFGBSY bit is cleared. (by the other CPU)
  - When the PESD bit in *Flash memory status register (FLASH_SR)* is set and a program or an erase operation is ongoing, the register write access causes a bus error.
  - When the PESD bit in *Flash memory status register (FLASH_SR)* is set, but there is no ongoing programming or erase operation, the register write access is completed. The requested program or erase operation is suspended, the BSY/CFGBSY asserted and remains 1, until suspend is deactivated. Consequently, PESD bit goes back to 0 and the suspended operation completes.

31	30	29	28	27	26	25	24	23	22	21	20	19	18	17	16
LOCK	OPT LOCK	Res.	Res.	OBL_ LAUNCH	RD ERRIE	ERRIE	EOPIE	Res.	Res.	Res.	Res.	Res.	FSTPG	OPT STRT	STRT
rs	rs			rc_w1	rw	rw	rw						rw	rs	rs
15	14	13	12	11	10	9	8	7	6	5	4	3	2	1	0
Res.	Res.	Res.	Res.	Res.	PNB[7:0]								MER	PER	PG
					rw	rw	rw	rw	rw	rw	rw	rw	rw	rw	rw

Bit 31 **LOCK:** FLASH_CR lock

This bit is set only. When set, the FLASH_CR register is locked. It is cleared by hardware after detecting the unlock sequence.

In case of an unsuccessful unlock operation, this bit remains set until the next system reset.

Bit 30 **OPTLOCK:** Options lock

This bit is set only. When set, all bits concerning in FLASH_CR register and so option page are locked. This bit is cleared by hardware after detecting the unlock sequence. The LOCK bit must be cleared before doing the unlock sequence for OPTLOCK bit.

In case of an unsuccessful unlock operation, this bit remains set until the next reset.

Bits 29:28 Reserved, must be kept at reset value.

Bit 27 **OBL_LAUNCH**: Forces the option byte loading

When set to 1, this bit forces the option byte reloading. This bit is cleared only when the option byte loading is complete. It cannot be written if OPTLOCK is set.

0: Option byte loading complete

1: Option byte loading requested

Bit 26 **RDERRIE**: PCROP read error interrupt enable

This bit enables the interrupt generation when the RDERR bit in the FLASH_SR is set to 1.

0: PCROP read error interrupt disabled

1: PCROP read error interrupt enabled

Bit 25 **ERRIE**: Error interrupt enable
This bit enables the interrupt generation when the OPERR bit in the FLASH_SR is set to 1.
0: OPERR error interrupt disabled
1: OPERR error interrupt enabled

Bit 24 **EOPIE**: End of operation interrupt enable
This bit enables the interrupt generation when the EOP bit in the FLASH_SR is set to 1.
0: EOP Interrupt disabled
1: EOP Interrupt enabled

Bits 23:19 Reserved, must be kept at reset value.

Bit 18 **FSTPG**: Fast programming
0: Fast programming disabled
1: Fast programming enabled

Bit 17 **OPTSTRT**: Options modification start
This bit triggers an options operation when set.
This bit is set only by software, and is cleared when the BSY bit is cleared in FLASH_SR.

Bit 16 **STRT**: Start
This bit triggers an erase operation when set. If MER and PER bits are reset and the STRT bit is set, an unpredictable behavior may occur without generating any error flag. This condition must be forbidden.
This bit is set only by software, and is cleared when the BSY bit is cleared in FLASH_SR.
Starting operations by the CPU1, involving secure flash memory pages are rejected and a bus error is generated.

Bits 15:11 Reserved, must be kept at reset value.

Bits 10:3 **PNB[7:0]**: Page number selection
These bits select the page to erase:
0x00: page 0
0x01: page 1
...

0x9F: page 159

Bit 2 **MER**: Mass erase
This bit triggers the mass erase (all user pages) when set.

Bit 1 **PER**: Page erase
0: page erase disabled
1: page erase enabled

Bit 0 **PG**: Programming
0: Flash memory programming disabled
1: Flash memory programming enabled

3.10.6 Flash memory ECC register (FLASH_ECCR)

Address offset: 0x018

Reset value: 0x0000 0000

Access: no wait state when no flash memory operation is on going, word, half-word and byte access.

31	30	29	28	27	26	25	24	23	22	21	20	19	18	17	16
ECCD	ECCC	Res.	CPUID[2:0]			Res.	ECCCIE	Res.	Res.	Res.	SYSF _ECC	Res.	Res.	Res.	Res.
rc_w1	rc_w1		r	r	r		rw				r				

15	14	13	12	11	10	9	8	7	6	5	4	3	2	1	0
ADDR_ECC[15:0]															
r	r	r	r	r	r	r	r	r	r	r	r	r	r	r	r

Bit 31 **ECCD**: ECC detection

Set by hardware when two ECC errors have been detected. When this bit is set, an NMI is generated.

Cleared by writing 1.

Bit 30 **ECCC**: ECC correction

Set by hardware when one ECC error has been detected and corrected. An interrupt is generated if ECCIE is set.

Cleared by writing 1.

Bit 29 Reserved, must be kept at reset value.

Bits 28:26 **CPUID[2:0]**: CPU identification

Set by hardware, indicates the Bus-ID of the CPU access causing the ECC failure.

0x0: value for CPUID for CPU1 bus-ID

0x1: value for CPUID for CPU2 bus-ID

Bit 25 Reserved, must be kept at reset value.

Bit 24 **ECCCIE**: ECC correction interrupt enable

0: ECCC interrupt disabled

1: ECCC interrupt enabled

Bits 23:21 Reserved, must be kept at reset value.

Bit 20 **SYSF_ECC**: System flash memory ECC fail

This bit indicates that the ECC error correction or double ECC error detection is located in the system flash memory.

Bits 19:16 Reserved, must be kept at reset value.

Bits 15:0 **ADDR_ECC[15:0]**: ECC fail double-word address

These bits indicate that double word address is concerned by the ECC error correction or causes the double ECC error detection.

3.10.7 Flash memory option register (FLASH_OPTR)

Address offset: 0x020

Reset value: 0bxxx1 xxxx x1xx xxxx 1xxx xxx1 xxxx xxxx (the option bits are loaded with values from flash memory at reset release)

Access: no wait state when no flash memory operation is ongoing, word, half-word and byte access.

31	30	29	28	27	26	25	24	23	22	21	20	19	18	17	16
AGC_TRIM[2:0]			nRST_ MODE_0	n BOOT0	nSW BOOT0	SRAM2 _RST	SRAM2 _PE	n BOOT1	nRST_ MODE_1	Res.	Res.	WWDG _SW	IWDG _STDBY	IWDG _STOP	IWDG _SW
rw	rw	rw	rw	rw	rw	rw	rw	rw	rw			rw	rw	rw	rw
15	14	13	12	11	10	9	8	7	6	5	4	3	2	1	0
IRH EN	nRST _SHDW	nRST _STDBY	nRST _STOP	BOR_LEV[2:0]			ESE	RDP[7:0]							
rw	rw	rw	rw	rw	rw	rw	r	rw	rw	rw	rw	rw	rw	rw	rw

Bits 31:29 **AGC_TRIM[2:0]**: Radio automatic gain control trimming
Default value 0b001

Bit 28 **nRST_MODE_0**: PB11 GPIO mode

– 1:

nRST_MODE_1 = 0: GPIO: standard GPIO pad functionality. Only internal RESET possible

nRST_MODE_1 = 1: Bidirectional reset: NRST pin configured in reset input/output mode (default mode). GPIO functionality is not available on PB11.

– 0:

nRST_MODE_1 = 0: Bidirectional reset: NRST pin configured in reset input/output mode. GPIO functionality is not available on PB11.

nRST_MODE_1 = 1: Reset Input only: a low level on the NRST pin generates system reset, internal RESET.

Bit 27 **nBOOT0:** nBOOT0 option bit

If nSWBOOT0 bit configuration select BOOT0 is taken from bit nBOOT0, together with bit nBOOT1, selects boot from the user flash memory, SRAM1, or system flash memory. Refer to *Section 2.3: Boot configuration*.

0: nBOOT0 = 0
1: nBOOT0 = 1

Bit 26 **nSWBOOT0:** Software BOOT0 selection

0: BOOT0 taken from the option bit nBOOT0
1: BOOT0 taken from PH3/BOOT0 pin

Bit 25 **SRAM2_RST:** SRAM2 and PKA RAM Erase when system reset

0: SRAM2 and PKA RAM erased when a system reset occurs
1: SRAM2 and non-secure PKA RAM not erased when a system reset occurs

Bit 24 **SRAM2_PE:** SRAM2 parity check enable

0: SRAM2 parity check enabled
1: SRAM2 parity check disabled

Bit 23 **nBOOT1:** Boot configuration

Together with the BOOT0 pin or option bit nBOOT0 (depending on nSWBOOT0 option bit configuration), this bit selects boot mode from the user flash memory, SRAM1 or the System memory. Refer to *Section 2.3: Boot configuration*.

Bit 22 **nRST_MODE_1**: PB11 reset mode

– 1:

nRST_MODE_0 = 0: Reset input only: a low level on the NRST pin generates system reset, internal RESET not propagated to the NSRT pin

nRST_MODE_0 = 1: Bidirectional reset: NRST pin configured in reset input/output mode (default mode)

– 0:

nRST_MODE_0 = 0: Bidirectional reset: NRST pin configured in reset input/output mode

nRST_MODE_0 = 1: GPIO: standard GPIO pad functionality, only internal RESET possible

Bits 21:20 Reserved, must be kept at reset value.

Bit 19 **WWDG_SW:** Window watchdog selection

0: Hardware window watchdog

1: Software window watchdog

Bit 18 **IWDG_STDBY:** Independent watchdog counter freeze in Standby mode

0: Independent watchdog counter is frozen in Standby mode

1: Independent watchdog counter is running in Standby mode

Bit 17 **IWDG_STOP:** Independent watchdog counter freeze in Stop mode

0: Independent watchdog counter is frozen in Stop mode

1: Independent watchdog counter is running in Stop mode

Bit 16 **IWDG_SW:** Independent watchdog selection

0: Hardware independent watchdog

1: Software independent watchdog

Bit 15 **IRHEN**: Internal reset holder enable bit

0: Internal resets are propagated as simple pulse on NRST pin

1: Internal resets drives NRST pin low until it is seen as low level

Bit 14 **nRST_SHDW:**

0: Reset generated when entering the Shutdown mode

1: No reset generated when entering the Shutdown mode

Bit 13 **nRST_STDBY:**

0: Reset generated when entering the Standby mode

1: No reset generated when entering the Standby mode

Bit 12 **nRST_STOP:**

0: Reset generated when entering the Stop mode

1: No reset generated when entering the Stop mode

Bits 11:9 **BOR_LEV[2:0]:** BOR reset level

These bits contain the V_{DD} supply level threshold that activates/releases the reset.

000: BOR Level 0. Reset level threshold is ~ 1.7 V

001: BOR Level 1. Reset level threshold is ~ 2.0 V

010: BOR Level 2. Reset level threshold is ~ 2.2 V

011: BOR Level 3. Reset level threshold is ~ 2.5 V

100: BOR Level 4. Reset level threshold is ~ 2.8 V

Bit 8 **ESE:** System security enabled flag.
Indicates whether the system security is enabled user flash memory FSD = 0.
0: Security disabled
1: Security enabled

Bits 7:0 **RDP[7:0]:** Read protection level
0xAA: Level 0, read protection not active
0xCC: Level 2, chip read protection active
Others: Level 1, memories read protection active

Note: Take care about PCROP_RDP configuration in Level 1. Refer to Level 1: Read protection for more details.

3.10.8 Flash memory PCROP zone A start address register (FLASH_PCROP1ASR)

Address offset: 0x024

Reset value: 0xXXXX XXXX

Access: no wait state when no flash memory operation is on going, word, half-word access

31	30	29	28	27	26	25	24	23	22	21	20	19	18	17	16
Res.	Res.	Res.	Res.	Res.	Res.	Res.	Res.	Res.	Res.	Res.	Res.	Res.	Res.	Res.	Res.

15	14	13	12	11	10	9	8	7	6	5	4	3	2	1	0
Res.	Res.	Res.	Res.	Res.	Res.	Res.	PCROP1A_STRT[8:0]								
							rw	rw	rw	rw	rw	rw	rw	rw	rw

Bits 31:9 Reserved, must be kept at reset value.

Bits 8:0 **PCROP1A_STRT[8:0]:** PCROP1A area start offset
PCROP1A_STRT contains the first 1 Kbyte page of the PCROP1A area.

3.10.9 Flash memory PCROP zone A end address register (FLASH_PCROP1AER)

Address offset: 0x028

Reset value: 0xXXXX XXXX

Access: no wait state when no flash memory operation is on going, word, half-word access. PCROP_RDP bit can be accessed with byte access

31	30	29	28	27	26	25	24	23	22	21	20	19	18	17	16
PCROP_RDP	Res.	Res.	Res.	Res.	Res.	Res.	Res.	Res.	Res.	Res.	Res.	Res.	Res.	Res.	Res.
rs															

15	14	13	12	11	10	9	8	7	6	5	4	3	2	1	0
Res.	Res.	Res.	Res.	Res.	Res.	Res.	PCROP1A_END[8:0]								
							rw	rw	rw	rw	rw	rw	rw	rw	rw

Bit 31 **PCROP_RDP:** PCROP area preserved when RDP level decreased
This bit is set only. It is reset after a full mass erase due to a change of RDP from Level 1 to Level 0.
0: PCROP area is not erased when the RDP level is decreased from Level 1 to Level 0.
1: PCROP area is erased when the RDP level is decreased from Level 1 to Level 0 (full mass erase).

Bits 30:9 Reserved, must be kept at reset value.

Bits 8:0 **PCROP1A_END[8:0]:** PCROP1A area end offset
PCROP1A_END contains the last 1 Kbyte page of the PCROP1A area.

3.10.10 Flash memory WRP area A address register (FLASH_WRP1AR)

Address offset: 0x02C

Reset value: 0xXXXX XXXX

Access: no wait state when no flash memory operation is on going, word, half-word and byte access.

31	30	29	28	27	26	25	24	23	22	21	20	19	18	17	16
Res.	Res.	Res.	Res.	Res.	Res.	Res.	Res.	WRP1A_END[7:0]							
								rw	rw	rw	rw	rw	rw	rw	rw
15	14	13	12	11	10	9	8	7	6	5	4	3	2	1	0
Res.	Res.	Res.	Res.	Res.	Res.	Res.	Res.	WRP1A_STRT[7:0]							
								rw	rw	rw	rw	rw	rw	rw	rw

Bits 31:24 Reserved, must be kept at reset value.

Bits 23:16 **WRP1A_END[7:0]:** WRP first area “A” end offset
Contains the last 2 Kbytes page of the WRP first area.

Bits 15:8 Reserved, must be kept at reset value.

Bits 7:0 **WRP1A_STRT[7:0]:** WRP first area “A” start offset
Contains the first 2 Kbytes page of the WRP first area.

3.10.11 Flash memory WRP area B address register (FLASH_WRP1BR)

Address offset: 0x030

Reset value: 0xXXXX XXXX

Access: no wait state when no flash memory operation is on going, word, half-word and byte access.

31	30	29	28	27	26	25	24	23	22	21	20	19	18	17	16
Res.	Res.	Res.	Res.	Res.	Res.	Res.	Res.	WRP1B_END[7:0]							
								rw	rw	rw	rw	rw	rw	rw	rw
15	14	13	12	11	10	9	8	7	6	5	4	3	2	1	0
Res.	Res.	Res.	Res.	Res.	Res.	Res.	Res.	WRP1B_STRT[7:0]							
								rw	rw	rw	rw	rw	rw	rw	rw

Bits 31:24 Reserved, must be kept at reset value.

Bits 23:16 **WRP1B_END[7:0]:** WRP second area “B” end offset
WRPB1_END contains the last 2 Kbytes page of the WRP second area.

Bits 15:8 Reserved, must be kept at reset value.

Bits 7:0 **WRP1B_STRT[7:0]:** WRP second area “B” start offset
WRPB1_END contains the first 2 Kbytes page of the WRP second area.

3.10.12 Flash memory PCROP zone B start address register (FLASH_PCROP1BSR)

Address offset: 0x034

Reset value: 0xXXXX XXXX

Access: no wait state when no flash memory operation is on going, word, half-word access.

31	30	29	28	27	26	25	24	23	22	21	20	19	18	17	16
Res.	Res.	Res.	Res.	Res.	Res.	Res.	Res.	Res.	Res.	Res.	Res.	Res.	Res.	Res.	Res.
15	14	13	12	11	10	9	8	7	6	5	4	3	2	1	0
Res.	Res.	Res.	Res.	Res.	Res.	Res.	PCROP1B_STRT[8:0]								
							rw	rw	rw	rw	rw	rw	rw	rw	rw

Bits 31:9 Reserved, must be kept at reset value.

Bits 8:0 **PCROP1B_STRT[8:0]:** PCROP1B area start offset
Contains the first 1 Kbyte page of the PCROP1B area.

3.10.13 Flash memory PCROP zone B end address register (FLASH_PCROP1BER)

Address offset: 0x038

Reset value: 0xXXXX XXXX

Access: no wait state when no flash memory operation is on going, word, half-word access.

31	30	29	28	27	26	25	24	23	22	21	20	19	18	17	16
Res.	Res.	Res.	Res.	Res.	Res.	Res.	Res.	Res.	Res.	Res.	Res.	Res.	Res.	Res.	Res.
15	14	13	12	11	10	9	8	7	6	5	4	3	2	1	0
Res.	Res.	Res.	Res.	Res.	Res.	Res.	PCROP1B_END[8:0]								
							rw	rw	rw	rw	rw	rw	rw	rw	rw

Bits 31:9 Reserved, must be kept at reset value.

Bits 8:0 **PCROP1B_END[8:0]:** PCROP1B area end offset
Contains the last 1 Kbyte page of the PCROP1B area.

3.10.14 Flash memory IPCC mailbox data buffer address register (FLASH_IPCCBR)

Address offset: 0x03C

Reset value: 0xXXXX XXXX

31	30	29	28	27	26	25	24	23	22	21	20	19	18	17	16
Res.	Res.	Res.	Res.	Res.	Res.	Res.	Res.	Res.	Res.	Res.	Res.	Res.	Res.	Res.	Res.

15	14	13	12	11	10	9	8	7	6	5	4	3	2	1	0
Res.	Res.	IPCCDBA[13:0]													
		rw	rw	rw	rw	rw	rw	rw	rw	rw	rw	rw	rw	rw	rw

Bits 31:14 Reserved, must be kept at reset value.

Bits 13:0 **IPCCDBA[13:0]:** IPCC mailbox data buffer base address offset
Contains the first double-word offset of the IPCC mailbox data buffer area in SRAM2.

3.10.15 Flash memory CPU2 access control register (FLASH_C2ACR)

Address offset: 0x05C

Reset value: 0x0000 0600

31	30	29	28	27	26	25	24	23	22	21	20	19	18	17	16
Res.	Res.	Res.	Res.	Res.	Res.	Res.	Res.	Res.	Res.	Res.	Res.	Res.	Res.	Res.	Res.

15	14	13	12	11	10	9	8	7	6	5	4	3	2	1	0
PES	Res.	Res.	Res.	ICRST	Res.	ICEN	PRFTEN	Res.	Res.	Res.	Res.	Res.	Res.	Res.	Res.
rw				rw		rw	rw								

Bits 31:16 Reserved, must be kept at reset value.

Bit 15 **PES**: CPU2 program / erase suspend request
0: Flash memory program and erase operations granted.
1: Any new flash memory program and erase operation is suspended until this bit and the same bit in *Flash memory access control register (FLASH_ACR)* are cleared. The PESD bit in both the *Flash memory status register (FLASH_SR)* and *Flash memory CPU2 status register (FLASH_C2SR)* is set when at least one PES bit in FLASH_ACR or FLASH_C2ACR is set.

Bits 14:12 Reserved, must be kept at reset value.

Bit 11 **ICRST**: CPU2 Instruction cache reset
0: CPU2 Instruction cache is not reset
1: CPU2 Instruction cache is reset
This bit can be written only when the instruction cache is disabled.

Bit 10 Reserved, must be kept at reset value.

Bit 9 **ICEN**: CPU2 Instruction cache enable
0: CPU2 Instruction cache is disabled
1: CPU2 Instruction cache is enabled

Bit 8 **PRFTEN:** CPU2 Prefetch enable.
0: CPU2 prefetch is disabled
1: CPU2 prefetch is enabled

Bits 7:0 Reserved, must be kept at reset value.

3.10.16 Flash memory CPU2 status register (FLASH_C2SR)

Address offset: 0x060

Reset value: 0x000X 0000

Access: no wait state, word, half-word and byte access.

31	30	29	28	27	26	25	24	23	22	21	20	19	18	17	16
Res.	Res.	Res.	Res.	Res.	Res.	Res.	Res.	Res.	Res.	Res.	Res.	PESD	CFGBSY	Res.	BSY
												r	r		r
15	14	13	12	11	10	9	8	7	6	5	4	3	2	1	0
Res.	RD ERR	Res.	Res.	Res.	Res.	FAST ERR	MISS ERR	PGS ERR	SIZ ERR	PGA ERR	WRP ERR	PROG ERR	Res.	OP ERR	EOP
	rc_w1					rc_w1	rc_w1	rc_w1	rc_w1	rc_w1	rc_w1	rc_w1		rc_w1	rc_w1

Bits 31:20 Reserved, must be kept at reset value.

Bit 19 **PESD**: Programming / erase operation suspended.
This bit is set and reset by hardware.
Set when at least one PES bit in either *Flash memory access control register (FLASH_ACR)* or *Flash memory CPU2 access control register (FLASH_C2ACR)* is set.
Cleared when both PES bits in FLASH_ACR and FLASH_C2ACR are cleared.
When set new program or erase operations are not started.

Bit 18 **CFGBSY**: Programming or erase configuration busy
This flag is set and reset by hardware:
- set when the first word is sent for program, or when setting STRT for erase
- reset when operation completes or is interrupted by an error.
When set to 1, any other operation through *Flash memory CPU2 control register (FLASH_C2CR)* is impossible and must be postponed (a programming or erase operation is ongoing). When reset to 0, programming and erase settings in *Flash memory CPU2 control register (FLASH_C2CR)* can be modified.

Bit 17 Reserved, must be kept at reset value.

Bit 16 **BSY**: Busy
This bit indicates that a flash memory operation requested by *Flash memory CPU2 control register (FLASH_C2CR)* is in progress. This is set on the beginning of a flash memory operation and reset when the operation finishes or when an error occurs.

Bit 15 Reserved, must be kept at reset value.

Bit 14 **RDERR**: PCROP read error
Set by hardware when an address to be read through the D-bus belongs to a read protected area of the flash memory (PCROP protection). An interrupt is generated if RDERRIE is set in FLASH_CR.
Cleared by writing 1.

Bits 13:10 Reserved, must be kept at reset value.

Bit 9 **FASTERR**: Fast programming error

Set by hardware when a fast programming sequence (activated by FSTPG) is interrupted due to an error (alignment, size, write protection or data miss). The corresponding status bit (PGAERR, SIZERR, WRPERR or MISSERR) is set at the same time.

Cleared by writing 1.

Bit 8 **MISSERR**: Fast programming data miss error

In fast programming mode, 64 double words (512 bytes) must be sent to the flash memory successively, and the new data must be sent to the flash memory logic control before the current data is fully programmed. MISSERR is set by hardware when the new data is not present in time.

Cleared by writing 1.

Bit 7 **PGSERR**: Programming sequence error

Set by hardware when a write access to the flash memory is performed by the code while PG or FSTPG have not been set previously. Set also by hardware when PROGERR, SIZERR, PGAERR, WRPERR, MISSERR or FASTERR is set due to a previous programming error.

Cleared by writing 1.

Bit 6 **SIZERR**: Size error

Set by hardware when the size of the access is a byte or half-word during a program or a fast program sequence. Only double word programming is allowed (consequently: word access).

Cleared by writing 1.

Bit 5 **PGAERR**: Programming alignment error

Set by hardware when the data to program cannot be contained in the same double word (64-bit) flash memory in case of standard programming, or if there is a change of page during fast programming.

Cleared by writing 1.

Bit 4 **WRPERR**: Write protection error

Set by hardware when an address to be erased/programmed belongs to a write-protected part (by WRP, PCROP or RDP Level 1) of the flash memory.

Cleared by writing 1.

Bit 3 **PROGERR**: Programming error

Set by hardware when a double-word address to be programmed contains a value different from 0xFFFF FFFF before programming, except if the data to write is 0x0000 0000 0000 0000.

Cleared by writing 1.

Bit 2 Reserved, must be kept at reset value.

Bit 1 **OPERR**: Operation error

Set by hardware when a flash memory operation (program / erase) completes unsuccessfully.

This bit is set only if error interrupts are enabled (ERRIE = 1).

Cleared by writing ‘1’.

Bit 0 **EOP**: End of operation

Set by hardware when one or more flash memory operation (programming / erase) completes successfully.

This bit is set only if the end of operation interrupts are enabled (EOPIE = 1).

Cleared by writing 1.

3.10.17 Flash memory CPU2 control register (FLASH_C2CR)

Address offset: 0x064

Reset value: 0xC000 0000

Access: no wait state when no flash memory operation is on going, word, half-word and byte access

This register cannot be modified when CFGBSY in *Flash memory CPU2 status register (FLASH_C2SR)* is set.

- When the PESD bit in *Flash memory CPU2 status register (FLASH_C2SR)* is cleared, the register write access is stalled until the CFGBSY bit is cleared (by the other CPU).
- When the PESD bit in *Flash memory CPU2 status register (FLASH_C2SR)* is set, the register write access causes a bus error.
- When the PESD bit in *Flash memory CPU2 status register (FLASH_C2SR)* is set, but there is no ongoing programming or erase operation, the register write access is completed. The requested program or erase operation is suspended, the BSY/CFGBSY asserted and remains 1 until suspend has been deactivated. Consequently, PESD bit goes back to 0 and the suspended operation completes.

31	30	29	28	27	26	25	24	23	22	21	20	19	18	17	16
Res.	Res.	Res.	Res.	Res.	RD ERRIE	ERR IE	EOP IE	Res.	Res.	Res.	Res.	Res.	FSTPG	Res.	STRT
					rw	rw	rw						rw		rs

15	14	13	12	11	10	9	8	7	6	5	4	3	2	1	0
Res.	Res.	Res.	Res.	Res.	PNB[7:0]								MER	PER	PG
					rw	rw	rw	rw	rw	rw	rw	rw	rw	rw	rw

Bits 31:27 Reserved, must be kept at reset value.

Bit 26 **RDERRIE**: PCROP read error interrupt enable

This bit enables the interrupt generation when the RDERR bit in the FLASH_SR is set to 1.
0: PCROP read error interrupt disabled
1: PCROP read error interrupt enabled

Bit 25 **ERRIE**: Error interrupt enable

This bit enables the interrupt generation when the OPERR bit in the FLASH_SR is set to 1.
0: OPERR error interrupt disabled
1: OPERR error interrupt enabled

Bit 24 **EOPIE**: End of operation interrupt enable

This bit enables the interrupt generation when the EOP bit in the FLASH_SR is set to 1.
0: EOP Interrupt disabled
1: EOP Interrupt enabled

Bits 23:19 Reserved, must be kept at reset value.

Bit 18 **FSTPG**: Fast programming

0: Fast programming disabled
1: Fast programming enabled

Bit 17 Reserved, must be kept at reset value.

Bit 16 **STRT**: Start

This bit triggers an erase operation when set. If MER and PER bits are reset and the STRT bit is set, an unpredictable behavior may occur without generating any error flag. This condition must be forbidden.

This bit is set only by software, and is cleared when the BSY bit is cleared in FLASH_SR.

Starting operations by the CPU1, involving secure flash memory pages is rejected and a bus error generated.

Bits 15:11 Reserved, must be kept at reset value.

Bits 10:3 **PNB[7:0]**: Page number selection

These bits select the page to erase:

0x00: page 0
0x01: page 1
...

0x9F: page 159

Bit 2 **MER**: Mass erase

This bit triggers the mass erase (all user pages) when set.

Bit 1 **PER**: Page erase

0: Page erase disabled
1: Page erase enabled

Bit 0 **PG**: Programming

0: Flash programming disabled
1: Flash programming enabled

3.10.18 Secure flash memory start address register (FLASH_SFR)

Address offset: 0x080

Reset value: 0b1111 1111 1111 1111 1111 1110 xxxx xxxx

This register provides write access security and can only be written by the CPU2. A write access from the CPU1 is ignored and a bus error generated. On any read access the register value is returned.

Written values are only taken into account after OBL.

31	30	29	28	27	26	25	24	23	22	21	20	19	18	17	16
Res.	Res.	Res.	Res.	Res.	Res.	Res.	Res.	Res.	Res.	Res.	Res.	Res.	Res.	Res.	Res.

15	14	13	12	11	10	9	8	7	6	5	4	3	2	1	0
Res.	Res.	Res.	DDS	Res.	Res.	Res.	FSD	SFSA[7:0]							
			rw				rw	rw	rw	rw	rw	rw	rw	rw	rw

Bits 31:13 Reserved, must be kept at reset value.

Bit 12 **DDS:** Disable CPU2 debug access

0: CPU2 debug access enabled
1: CPU2 debug access disabled

Bits 11:9 Reserved, must be kept at reset value.

Bit 8 **FSD:** Flash memory security disabled.

1: System and flash memory non-secure

0: System and flash memory secure (the secure area of the flash memory is given by SFSA)

Bits 7:0 **SFSA[7:0]:** Secure flash memory start address

SFSA[7:0] contain the start address of the first 2 Kbytes page of the secure flash memory area.

3.10.19 Flash memory secure SRAM2 start address and CPU2 reset vector register (FLASH_SRRVR)

Address offset: 0x084

Reset value: 0bxxxx xxx1 xxxx xxxx xxxx xxxx xxxx xxxx

This register provides write access security and can only be written by the CPU2. A write access from the CPU1 is ignored and a bus error generated. On any read access the register value is returned.

Written values are only taken into account after OBL.

31	30	29	28	27	26	25	24	23	22	21	20	19	18	17	16
C2OPT	BRSD_B	Res.	Res.	Res.	SBRSA_B[1:0]		Res.	BRSD_A	SBRSA_A[4:0]					Res.	SBRV[16]
rw	rw				rw	rw		rw	rw	rw	rw	rw	rw		rw
15	14	13	12	11	10	9	8	7	6	5	4	3	2	1	0
SBRV[15:0]															
rw	rw	rw	rw	rw	rw	rw	rw	rw	rw	rw	rw	rw	rw	rw	rw

Bit 31 **C2OPT:** CPU2 boot reset vector memory selection.

0: SBRV offset addresses SRAM1 or SRAM2, from start address 0x2000 0000. SBRV value must be kept within the SRAM area.

1: SBRV offset addresses flash memory, from start address 0x0800 0000.

Bit 30 **BRSD_B:** Backup SRAM2b security disable

BRSD_B = 1: SRAM2b is non-secure

BRSD_B = 0: SRAM2b is secure. SBRSA_B contains the start address of the first 1 Kbyte page of the secure backup SRAM2b area.

Bits 29:27 Reserved, must be kept at reset value.

Bits 26:25 **SBRSA_B[1:0]:** Secure backup SRAM2b start address

BRSD_B = 0: SRAM2b is secure. SBRSA_B[1:0] contains the start address of the first 1 Kbyte page of the secure backup SRAM2b area.

Bit 24 Reserved, must be kept at reset value.

Bit 23 **BRSD_A:** Backup SRAM2a security disable.

BRSD_A = 1: SRAM2a is non-secure

BRSD_A = 0: SRAM2a is secure. SBRSA_A[4:0] contains the start address of the first 1 Kbyte page of the secure backup SRAM2a area.

Bits 22:18 **SBRSA_A[4:0]:** Secure backup SRAM2a start address

BRSD_A = 0: SRAM2a is secure. SBRSA_A[4:0] contains the start address of the first 1 Kbyte page of the secure backup SRAM2a area.

Bit 17 Reserved, must be kept at reset value.

Bits 16:0 **SBRV[16:0]:** CPU2 boot reset vector

Contains the word aligned CPU2 boot reset start address offset within the selected memory area by C2OPT.

3.10.20 FLASH register map

Table 18. Flash interface register map and reset values

Offset	Register	31	30	29	28	27	26	25	24	23	22	21	20	19	18	17	16	15	14	13	12	11	10	9	8	7	6	5	4	3	2	1	0
0x000	FLASH_ACR	Res.	Res.	Res.	Res.	Res.	Res.	Res.	Res.	Res.	Res.	Res.	Res.	Res.	Res.	Res.	EMPTY	PES	Res.	Res.	DCRST	ICRST	DCEN	ICEN	PRFTEN	Res.	Res.	Res.	Res.	Res.	LATENCY [2:0]		
	Reset value																0	0			0	0	1	1	0						0	0	0
0x004	Reserved	Res.	Res.	Res.	Res.	Res.	Res.	Res.	Res.	Res.	Res.	Res.	Res.	Res.	Res.	Res.	Res.	Res.	Res.	Res.	Res.	Res.	Res.	Res.	Res.	Res.	Res.	Res.	Res.	Res.	Res.	Res.	Res.
	Reset value																																
0x008	FLASH_KEYR	KEYR[31:0]																															
	Reset value	0	0	0	0	0	0	0	0	0	0	0	0	0	0	0	0	0	0	0	0	0	0	0	0	0	0	0	0	0	0	0	0
0x00C	FLASH_OPT KEYR	OPTKEYR[31:0]																															
	Reset value	0	0	0	0	0	0	0	0	0	0	0	0	0	0	0	0	0	0	0	0	0	0	0	0	0	0	0	0	0	0	0	0
0x010	FLASH_SR	Res.	Res.	Res.	Res.	Res.	Res.	Res.	Res.	Res.	Res.	Res.	Res.	PESD	CFGBSY	Res.	BSY	OPTVERR	RDERR	OPTNV	Res.	Res.	Res.	FASTERR	MISERR	PGSERR	SIZERR	PGAERR	WRPERR	PROGERR	Res.	OPERR	EOP
	Reset value													0	0		0	X	0	X				0	0	0	0	0	0	0		0	0
0x014	FLASH_CR	LOCK	OPTLOCK	Res.	Res.	OBL_LAUNCH	RDERRIE	ERRIE	EOPIE	Res.	Res.	Res.	Res.	Res.	FSTPG	OPTSTRT	STRT	Res.	Res.	Res.	Res.	Res.	PNB[7:0]								MER	PER	PG
	Reset value	1	1			0	0	0	0						0	0	0						0	0	0	0	0	0	0	0	0	0	0
0x018	FLASH_ECCR	ECCD	ECCC	Res.	CPUID [2:0]			Res.	ECCCIE	Res.	Res.	Res.	SYSF_ECC	Res.	Res.	Res.	Res.	ADDR_ECC[15:0]															
	Reset value	0	0		0	0	0		0				0					0	0	0	0	0	0	0	0	0	0	0	0	0	0	0	0
0x020	FLASH_OPTR	AGC_TRIM [2:0]			nRST_MODE_0	nBOOT0	nSWBOOT0	SRAM2_RST	SRAM2_PE	nBOOT1	nRST_MODE_1	Res.	Res.	WWDG_SW	IWDG_STBY	IWDG_STOP	IWDG_SW	IRHEN	nRST_SHDW	nRST_STDBY	nRST_STOP	BOR_LEV [2:0]			ESE	RDP[7:0]							
	Reset value	X	X	X	X	X	X	X	X	X	X			X	X	X	X	X	X	X	X	X	X	X	1	X	X	X	X	X	X	X	X
0x024	FLASH_ PCROP1ASR	Res.	Res.	Res.	Res.	Res.	Res.	Res.	Res.	Res.	Res.	Res.	Res.	Res.	Res.	Res.	Res.	Res.	Res.	Res.	Res.	Res.	Res.	Res.	PCROP1A_STRT[8:0]								
	Reset value																								X	X	X	X	X	X	X	X	X
0x028	FLASH_ PCROP1AER	PCROP_RDP	Res.	Res.	Res.	Res.	Res.	Res.	Res.	Res.	Res.	Res.	Res.	Res.	Res.	Res.	Res.	Res.	Res.	Res.	Res.	Res.	Res.	Res.	PCROP1A_END[8:0]								
	Reset value	x																							X	X	X	X	X	X	X	X	X
0x02C	FLASH_ WRP1AR	Res.	Res.	Res.	Res.	Res.	Res.	Res.	Res.	WRP1A_END[7:0]								Res.	Res.	Res.	Res.	Res.	Res.	Res.	Res.	WRP1A_STRT[7:0]							
	Reset value									X	X	X	X	X	X	X	X									X	X	X	X	X	X	X	X

Table 18. Flash interface register map and reset values (continued)

Offset	Register	31	30	29	28	27	26	25	24	23	22	21	20	19	18	17	16	15	14	13	12	11	10	9	8	7	6	5	4	3	2	1	0
0x030	FLASH_ WRP1BR	Res.	Res.	Res.	Res.	Res.	Res.	Res.	Res.	WRP1B_END[7:0]								Res.	Res.	Res.	Res.	Res.	Res.	Res.	Res.	WRP1B_STRT[7:0]							
	Reset value									X	X	X	X	X	X	X	X									X	X	X	X	X	X	X	X
0x034	FLASH_ PCROP1BSR	Res.	Res.	Res.	Res.	Res.	Res.	Res.	Res.	Res.	Res.	Res.	Res.	Res.	Res.	Res.	Res.	Res.	Res.	Res.	Res.	Res.	Res.	Res.	PCROP1B_STRT[8:0]								
	Reset value																								X	X	X	X	X	X	X	X	X
0x038	FLASH_ PCROP1BER	Res.	Res.	Res.	Res.	Res.	Res.	Res.	Res.	Res.	Res.	Res.	Res.	Res.	Res.	Res.	Res.	Res.	Res.	Res.	Res.	Res.	Res.	Res.	PCROP1B_END[8:0]								
	Reset value																								X	X	X	X	X	X	X	X	X
0x03C	FLASH_ IPCCBR	Res.	Res.	Res.	Res.	Res.	Res.	Res.	Res.	Res.	Res.	Res.	Res.	Res.	Res.	Res.	Res.	Res.	Res.	IPCCDBA[13:0]													
	Reset value																			X	X	X	X	X	X	X	X	X	X	X	X	X	X
0x05C	FLASH_C2ACR	Res.	Res.	Res.	Res.	Res.	Res.	Res.	Res.	Res.	Res.	Res.	Res.	Res.	Res.	Res.	Res.	PES	Res.	Res.	Res.	ICRST	Res.	ICEN	PRFTEN	Res.	Res.	Res.	Res.	Res.	Res.	Res.	Res.
	Reset value																	0				0		1	0								
0x060	FLASH_C2SR	Res.	Res.	Res.	Res.	Res.	Res.	Res.	Res.	Res.	Res.	Res.	Res.	PESD	CFGBSY	Res.	BSY	Res.	RDERR	Res.	Res.	Res.	Res.	FASTERR	MISERR	PGSERR	SIZERR	PGAERR	WRPERR	PROGERR	Res.	OPERR	EOP
	Reset value													0	0		0		0					0	0	0	0	0	0	0		0	0
0x064	FLASH_C2CR	Res.	Res.	Res.	Res.	Res.	RDERRIE	ERRIE	EOPIE	Res.	Res.	Res.	Res.	Res.	FSTPG	Res.	STRT	Res.	Res.	Res.	Res.	Res.	PNB[7:0]								MER	PER	PG
	Reset value						0	0	0						0		0						0	0	0	0	0	0	0	0	0	0	0
0x080	FLASH_SFR	Res.	Res.	Res.	Res.	Res.	Res.	Res.	Res.	Res.	Res.	Res.	Res.	Res.	Res.	Res.	Res.	Res.	Res.	Res.	DDS	Res.	Res.	Res.	FSD	SFSA[7:0]							
	Reset value																				1				0	X	X	X	X	X	X	X	X
0x084	FLASH_SRRVR	C2OPT	BRSD_B	Res.	Res.	Res.	SBRSA [1:0]		Res.	BRSD_A	SBRSA_A[4:0]					Res.	SBRV[16:0]																
	Reset value	X	X				X	X		X	X	X	X	X	X		X	X	X	X	X	X	X	X	X	X	X	X	X	X	X	X	X

Refer to *Section 2.2 on page 55* for the register boundary addresses.

4 Radio system

4.1 Introduction

The system is ultra low power compliant with the Bluetooth® core specification BLE5.4 standard.

The radio system consists of a 2.4 GHz RF front end and a Bluetooth® Low Energy (BLE) physical layer controller. The system is controlled from the CPU2 that contains the radio lower protocol software layers. Interface to the application running on the CPU2 is provided via mailbox message system.

4.2 Main features

- 2.4 GHz RF transceiver supporting:
  - Bluetooth® BLE5.4 (2 Mbps) standard support
- Programmable output power
- RSSI
- Integrated balun
- Bluetooth® BLE5.4 features:
  - GAP: central, peripheral, observer and broadcaster roles
  - Simultaneous multiple role support
  - Master / slave support
  - ATT / GATT: client and server

4.3 Radio system functional description

4.3.1 General description

The block diagram of the Radio system is shown in *Figure 5*.

Figure 5. Radio system block diagram

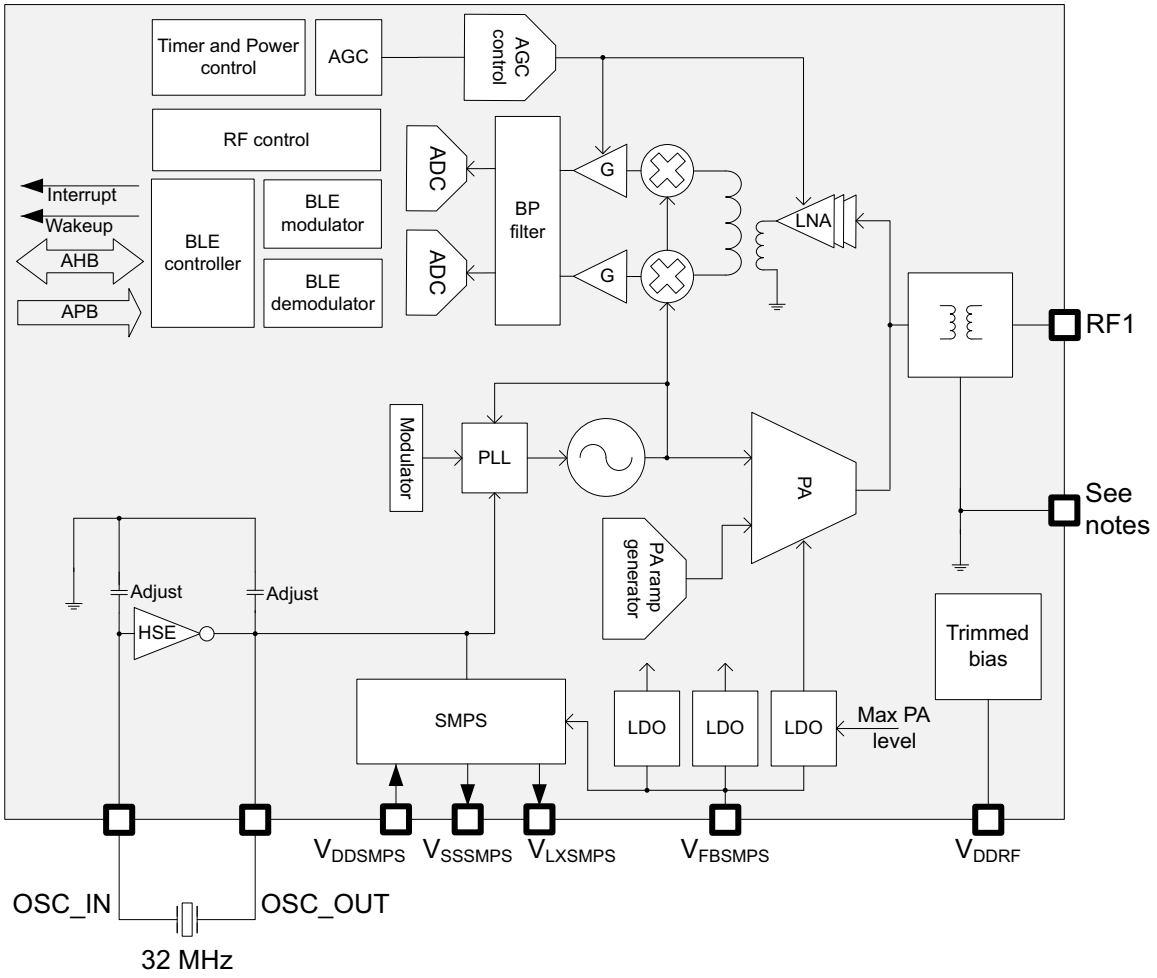

Notes:
- UFQFN48 and UFQFN48E: V_{SS} through exposed pad and V_{SSRF} pin must be connected to ground plane
- WLCSP49: V_{SSRF} pins must be connected to ground plane

The maximum default transmit output power can be supported with a default V_{FBSMPS} supply level. For higher output power the V_{FBSMPS} supply level must be increased (see the device data sheet for more information).

5 Cyclic redundancy check calculation unit (CRC)

5.1 Introduction

The CRC (cyclic redundancy check) calculation unit is used to get a CRC code from 8-, 16- or 32-bit data word and a generator polynomial.

Among other applications, CRC-based techniques are used to verify data transmission or storage integrity. In the scope of the functional safety standards, they offer a means of verifying the flash memory integrity. The CRC calculation unit helps compute a signature of the software during runtime, to be compared with a reference signature generated at link time and stored at a given memory location.

5.2 CRC main features

- Uses CRC-32 (Ethernet) polynomial: 0x4C11DB7
  $X^{32} + X^{26} + X^{23} + X^{22} + X^{16} + X^{12} + X^{11} + X^{10} + X^{8} + X^{7} + X^{5} + X^{4} + X^{2} + X + 1$
- Alternatively, uses fully programmable polynomial with programmable size (7, 8, 16, 32 bits)
- Handles 8-,16-, 32-bit data size
- Programmable CRC initial value
- Single input/output 32-bit data register
- Input buffer to avoid bus stall during calculation
- CRC computation done in 4 AHB clock cycles (HCLK) for the 32-bit data size
- General-purpose 8-bit register (can be used for temporary storage)
- Reversibility option on I/O data
- Accessed through AHB slave peripheral by 32-bit words only, with the exception of CRC_DR register that can be accessed by words, right-aligned half-words and right-aligned bytes

5.3 CRC functional description

5.3.1 CRC block diagram

Figure 6. CRC calculation unit block diagram

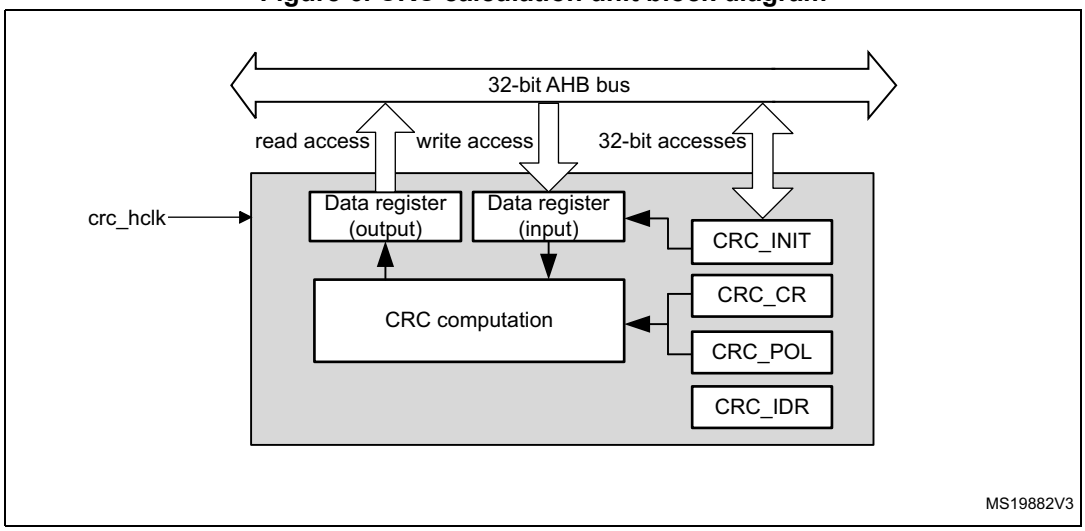

5.3.2 CRC internal signals

Table 19. CRC internal input/output signals

Signal name	Signal type	Description
crc_hclk	Digital input	AHB clock

5.3.3 CRC operation

The CRC calculation unit has a single 32-bit read/write data register (CRC_DR). It is used to input new data (write access), and holds the result of the previous CRC calculation (read access).

Each write operation to the data register creates a combination of the previous CRC value (stored in CRC_DR) and the new one. CRC computation is done on the whole 32-bit data word or byte by byte depending on the format of the data being written.

The CRC_DR register can be accessed by word, right-aligned half-word and right-aligned byte. For the other registers only 32-bit accesses are allowed.

The duration of the computation depends on data width:

- 4 AHB clock cycles for 32 bits
- 2 AHB clock cycles for 16 bits
- 1 AHB clock cycles for 8 bits

An input buffer allows a second data to be immediately written without waiting for any wait-states due to the previous CRC calculation.

The data size can be dynamically adjusted to minimize the number of write accesses for a given number of bytes. For instance, a CRC for 5 bytes can be computed with a word write followed by a byte write.

The input data can be reversed to manage the various endianness schemes. The reversing operation can be performed on 8 bits, 16 bits and 32 bits depending on the REV_IN[1:0] bits in the CRC_CR register.

For example, 0x1A2B3C4D input data are used for CRC calculation as:

- 0x58D43CB2 with bit-reversal done by byte
- 0xD458B23C with bit-reversal done by half-word
- 0xB23CD458 with bit-reversal done on the full word

The output data can also be reversed by setting the REV_OUT bit in the CRC_CR register.

The operation is done at bit level. For example, 0x11223344 output data are converted to 0x22CC4488.

The CRC calculator can be initialized to a programmable value using the RESET control bit in the CRC_CR register (the default value is 0xFFFFFFFF).

The initial CRC value can be programmed with the CRC_INIT register. The CRC_DR register is automatically initialized upon CRC_INIT register write access.

The CRC_IDR register can be used to hold a temporary value related to CRC calculation. It is not affected by the RESET bit in the CRC_CR register.

Polynomial programmability

The polynomial coefficients are fully programmable through the CRC_POL register, and the polynomial size can be configured to be 7, 8, 16 or 32 bits by programming the POLYSIZE[1:0] bits in the CRC_CR register. Even polynomials are not supported.

Note: The type of an even polynomial is $X+X^2+..+X^n$, while the type of an odd polynomial is $1+X+X^2+..+X^n$.

If the CRC data is less than 32-bit, its value can be read from the least significant bits of the CRC_DR register.

To obtain a reliable CRC calculation, the change on-fly of the polynomial value or size can not be performed during a CRC calculation. As a result, if a CRC calculation is ongoing, the application must either reset it or perform a CRC_DR read before changing the polynomial.

The default polynomial value is the CRC-32 (Ethernet) polynomial: 0x4C11DB7.

5.4 CRC registers

The CRC_DR register can be accessed by words, right-aligned half-words and right-aligned bytes. For the other registers only 32-bit accesses are allowed.

5.4.1 CRC data register (CRC_DR)

Address offset: 0x00

Reset value: 0xFFFF FFFF

31	30	29	28	27	26	25	24	23	22	21	20	19	18	17	16
DR[31:16]															
rw	rw	rw	rw	rw	rw	rw	rw	rw	rw	rw	rw	rw	rw	rw	rw
15	14	13	12	11	10	9	8	7	6	5	4	3	2	1	0
DR[15:0]															
rw	rw	rw	rw	rw	rw	rw	rw	rw	rw	rw	rw	rw	rw	rw	rw

Bits 31:0 **DR[31:0]:** Data register bits

This register is used to write new data to the CRC calculator.

It holds the previous CRC calculation result when it is read.

If the data size is less than 32 bits, the least significant bits are used to write/read the correct value.

5.4.2 CRC independent data register (CRC_IDR)

Address offset: 0x04

Reset value: 0x0000 0000

31	30	29	28	27	26	25	24	23	22	21	20	19	18	17	16
IDR[31:16]															
rw	rw	rw	rw	rw	rw	rw	rw	rw	rw	rw	rw	rw	rw	rw	rw
15	14	13	12	11	10	9	8	7	6	5	4	3	2	1	0
IDR[15:0]															
rw	rw	rw	rw	rw	rw	rw	rw	rw	rw	rw	rw	rw	rw	rw	rw

Bits 31:0 **IDR[31:0]**: General-purpose 32-bit data register bits

These bits can be used as a temporary storage location for four bytes.

This register is not affected by CRC resets generated by the RESET bit in the CRC_CR register

5.4.3 CRC control register (CRC_CR)

Address offset: 0x08

Reset value: 0x0000 0000

31	30	29	28	27	26	25	24	23	22	21	20	19	18	17	16
Res.	Res.	Res.	Res.	Res.	Res.	Res.	Res.	Res.	Res.	Res.	Res.	Res.	Res.	Res.	Res.
15	14	13	12	11	10	9	8	7	6	5	4	3	2	1	0
Res.	Res.	Res.	Res.	Res.	Res.	Res.	Res.	REV_OUT	REV_IN[1:0]		POLYSIZE[1:0]		Res.	Res.	RESET
								rw	rw	rw	rw	rw			rs

Bits 31:8 Reserved, must be kept at reset value.

Bit 7 **REV_OUT**: Reverse output data

This bit controls the reversal of the bit order of the output data.

0: Bit order not affected

1: Bit-reversed output format

Bits 6:5 **REV_IN[1:0]**: Reverse input data

This bitfield controls the reversal of the bit order of the input data

00: Bit order not affected

01: Bit reversal done by byte

10: Bit reversal done by half-word

11: Bit reversal done by word

Bits 4:3 **POLYSIZE[1:0]**: Polynomial size

These bits control the size of the polynomial.

00: 32 bit polynomial

01: 16 bit polynomial

10: 8 bit polynomial

11: 7 bit polynomial

Bits 2:1 Reserved, must be kept at reset value.

Bit 0 **RESET**: RESET bit

This bit is set by software to reset the CRC calculation unit and set the data register to the value stored in the CRC_INIT register. This bit can only be set, it is automatically cleared by hardware

5.4.4 CRC initial value (CRC_INIT)

Address offset: 0x10

Reset value: 0xFFFF FFFF

31	30	29	28	27	26	25	24	23	22	21	20	19	18	17	16
CRC_INIT[31:16]															
rw	rw	rw	rw	rw	rw	rw	rw	rw	rw	rw	rw	rw	rw	rw	rw
15	14	13	12	11	10	9	8	7	6	5	4	3	2	1	0
CRC_INIT[15:0]															
rw	rw	rw	rw	rw	rw	rw	rw	rw	rw	rw	rw	rw	rw	rw	rw

Bits 31:0 **CRC_INIT[31:0]***:* Programmable initial CRC value

This register is used to write the CRC initial value.

5.4.5 CRC polynomial (CRC_POL)

Address offset: 0x14

Reset value: 0x04C1 1DB7

31	30	29	28	27	26	25	24	23	22	21	20	19	18	17	16
POL[31:16]															
rw	rw	rw	rw	rw	rw	rw	rw	rw	rw	rw	rw	rw	rw	rw	rw
15	14	13	12	11	10	9	8	7	6	5	4	3	2	1	0
POL[15:0]															
rw	rw	rw	rw	rw	rw	rw	rw	rw	rw	rw	rw	rw	rw	rw	rw

Bits 31:0 **POL[31:0]***:* Programmable polynomial

This register is used to write the coefficients of the polynomial to be used for CRC calculation.

If the polynomial size is less than 32 bits, the least significant bits have to be used to program the correct value.

5.4.6 CRC register map

Table 20. CRC register map and reset values

Offset	Register name	31	30	29	28	27	26	25	24	23	22	21	20	19	18	17	16	15	14	13	12	11	10	9	8	7	6	5	4	3	2	1	0
0x00	CRC_DR	DR[31:0]																															
	Reset value	1	1	1	1	1	1	1	1	1	1	1	1	1	1	1	1	1	1	1	1	1	1	1	1	1	1	1	1	1	1	1	1
0x04	CRC_IDR	IDR[31:0]																															
	Reset value	0	0	0	0	0	0	0	0	0	0	0	0	0	0	0	0	0	0	0	0	0	0	0	0	0	0	0	0	0	0	0	0
0x08	CRC_CR	Res.	Res.	Res.	Res.	Res.	Res.	Res.	Res.	Res.	Res.	Res.	Res.	Res.	Res.	Res.	Res.	Res.	Res.	Res.	Res.	Res.	Res.	Res.	Res.	REV_OUT	REV_IN[1:0]		POLYSIZE[1:0]		Res.	Res.	RESET
	Reset value																									0	0	0	0	0			0
0x10	CRC_INIT	CRC_INIT[31:0]																															
	Reset value	1	1	1	1	1	1	1	1	1	1	1	1	1	1	1	1	1	1	1	1	1	1	1	1	1	1	1	1	1	1	1	1
0x14	CRC_POL	POL[31:0]																															
	Reset value	0	0	0	0	0	1	0	0	1	1	0	0	0	0	0	1	0	0	0	1	1	1	0	1	1	0	1	1	0	1	1	1

Refer to *Section 2.2: Memory organization* for the register boundary addresses.

6 Power control (PWR)

6.1 Power supplies

The devices require a V_{DD} operating voltage supply between 1.71 V and 3.6 V. Several independent supplies (V_{DDSMPS}, V_{FBSMPS}, V_{DDA}, V_{DDRF}) can be provided for specific peripherals:

- V_{DD} = 1.71 V to 3.6 V

  V_{DD} is the external power supply for the I/Os, the system analog blocks such as reset, power management, internal clocks and low power regulator. It is provided externally through VDD pins.
- V_{DDSMPS} = 1.71 V to 3.6 V
  V_{DDSMPS} is the external power supply for the SMPS step-down converter. It is provided externally through VDDSMPS supply pin, and must be connected to the same supply as V_{DD}.
- V_{FBSMPS} = 1.40 V to 3.6 V
  V_{FBSMPS} is the external power supply for the main and RF system regulators. It is provided externally through VFBSMPS pin, and may be supplied through either the SMPS step-down converter or connected to the same supply as V_{DD}.
- V_{DDA} = 1.62 V (ADCs/COMPs) to 3.6 V

  V_{DDA} is the external analog power supply for A/D converters, D/A converters, voltage reference buffer, operational amplifiers and comparators. The V_{DDA} voltage level is independent from the V_{DD} voltage and must preferably be connected to V_{DD} when these peripherals are not used.
- V_{DDRF} = 1.71 V to 3.6 V

  V_{DDRF} is the external power supply for the Radio. It is provided externally through the VDDRF pin, and must be connected to the same supply as V_{DD}.
- V_{BAT} = 1.55 V to 3.6 V

  V_{BAT} is the power supply for RTC, external clock 32 kHz oscillator and backup registers (through power switch) when V_{DD} is not present.

During power up and power down, the following power sequence is required:

- When V_{DD} < 1 V the other power supply (V_{DDA}) must remain below V_{DD} + 0.3 V. During the power down V_{DD} can temporarily become lower than the other supplies only if the energy provided to the MCU remains below 1 mJ. This allows the external decoupling capacitors to discharge with different time constants.
- When V_{DD} ≥ 1 V all power supplies become independent.

An embedded linear voltage regulator is used to supply the internal digital power V_{CORE}. V_{CORE} is the power supply for digital peripherals, SRAM1 and SRAM2. The flash memory is supplied by V_{CORE} and V_{DD}.

Figure 7. Power supply overview

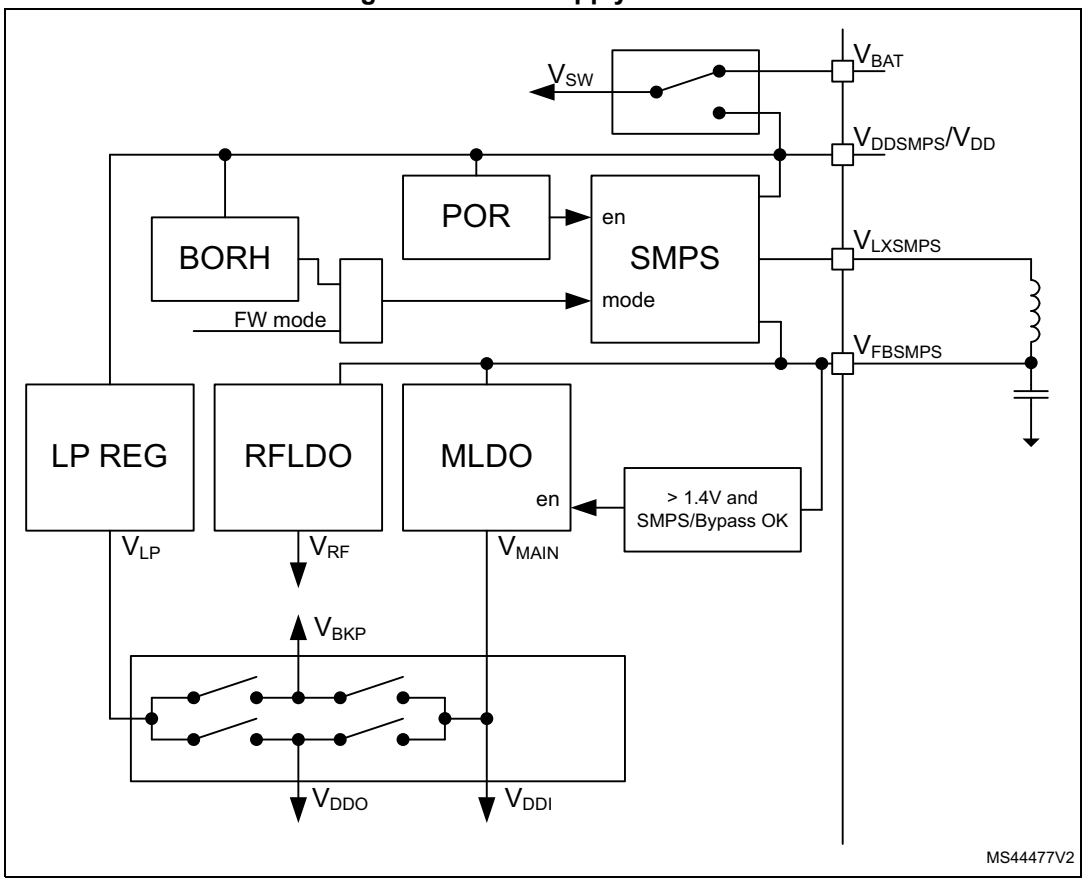

As shown in *Figure 8*, different supply configurations are supported, controlled according to the scheme of *Table 21*.

Figure 8. Supply configurations

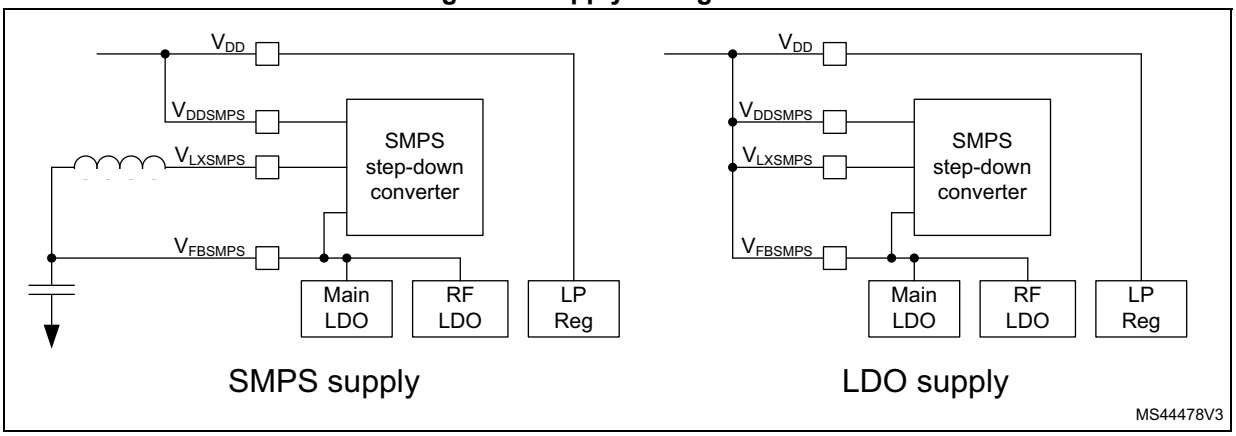

The SMPS step-down converter operating mode depends upon the SMPSEN setting in *PWR control register 5 (PWR_CR5)* and upon the system operating modes Run, Stop0, Stop1, Stop2, Standby, and Shutdown.

Table 21. Supply configuration control

Supply configuration	SMPSEN	System Operating mode	Description
Default	0	NA	SMPS in Bypass mode
SMPS supply	1(1)	Run	SMPS in SMPS mode
		Stop0	
		Stop1	SMPS in Open mode
		Standby and Shutdown	
LDO supply	0(2)	Any	SMPS in Bypass mode

1. When SMPS step-down converter SMPS mode is enabled, it is good practice to enable the BORH to monitor the supply.
2. In LDO supply the SMPS must not be enabled, or the product can be permanently damaged.

Two specifics features have been added to this step-down SMPS in association with the supported low power modes:

- BYPASS mode: capability for the SMPS to be bypassed (the current continues to flow through its coil). The V_{DDSMPS} voltage is directly connected to V_{LXSMPS}. An additional hardware mechanism allows the SMPS to automatically switch to BYPASS mode if V_{DD} falls below a given level (V_{BORH}), ensuring smooth operation even at very low operating voltages.
- OPEN mode: in this mode the SMPS output (V_{LXSMPS}) is open from any circuitry and the load of the SMPS bulk capacitance is kept. This makes it possible to speed up the wake-up time, by having the bulk capacitance precharged.

The internal state machine manages these states automatically when entering and exiting the low power modes.

After a POR reset the SMPS step-down converter is in Bypass mode.

During Stop1, and Standby the SMPS step-down converter is put in the Open mode by hardware (see *Table 21*). When exiting from low-power modes (except Shutdown) the SMPS step-down converter is set by hardware to the mode selected by the SMPSEN bit (SMPS mode or Bypass). The SMPSEN bit in *PWR control register 5 (PWR_CR5)* is retained in Standby mode.

When the SMPS step-down converter is in SMPS mode the BORH can be configured, with BORHC in *PWR control register 5 (PWR_CR5)*, to enable switching on the fly when the supply drops below the SMPS step-down converter SMPS mode operating supply level. When the V_{DD} supply drops below the selected BORH threshold level the SMPS step-down converter is forced in Bypass mode, register bit SMPSEN is cleared. A SMPSFBF interrupt is generated when enabled. When the V_{DD} supply rises above the BORH threshold level, a BORHF interrupt is generated when enabled. It is up to the software to switch the SMPS step-down converter back to SMPS mode.

When the SMPS step-down converter is disabled SMPSEN is 0, the SMPS step-down converter is in Bypass mode and the application LDO mode can be used.

6.1.1 Independent analog peripherals supply

To improve ADC conversion accuracy and to extend the supply flexibility, the analog peripherals have an independent power supply that can be separately filtered and shielded from noise on the PCB.

- The analog peripherals voltage supply input is available on a separate V_{DDA} pin.
- An isolated supply ground connection is provided on V_{SSA} pin.

The V_{DDA} supply voltage can be different from V_{DD}. The presence of V_{DDA} must be checked before enabling any of the analog peripherals supplied by V_{DDA} (A/D converter, comparators, voltage reference buffer).

The V_{DDA} supply can be monitored by the Peripheral voltage monitoring, and compared with one threshold (1.65 V for PVM3), refer to *Section 6.2.3* for more details.

When a single supply is used, V_{DDA} can be externally connected to V_{DD} through the external filtering circuit in order to ensure a noise-free V_{DDA} reference voltage.

The noise performance of analog signals may be impacted by the integrated SMPS switching. To prevent this the SMPS may be switched off on the fly when measuring analog signals.

6.1.2 Battery backup domain

To retain the content of the Backup registers and supply the RTC function when V_{DD} is turned off, the V_{BAT} pin can be connected to an optional backup voltage supplied by a battery or by another source.

The V_{BAT} pin powers the RTC unit, the LSE oscillator and the PC14 to PC15 I/Os, allowing the RTC to operate even when the main power supply is turned off. The switch to the V_{BAT} supply is controlled by the power-down reset embedded in the Reset block.

Warning: **During $t_{RSTTEMPO}$ (temporization at V_{DD} startup) or after a PDR has been detected, the power switch between V_{BAT} and V_{DD} remains connected to V_{BAT}.**
During the startup phase, if V_{DD} is established in less than $t_{RSTTEMPO}$ (refer to the datasheet for its value) and $V_{DD} > V_{BAT} + 0.6$ V, a current may be injected into V_{BAT} through an internal diode connected between V_{DD} and the power switch (V_{BAT}).
If the power supply / battery connected to the VBAT pin cannot support this current injection, it is recommended to connect an external low-drop diode between this power supply and the VBAT pin.

If no external battery is used in the application, it is recommended to connect V_{BAT} to V_{DD} supply, and add a 100 nF external ceramic decoupling capacitor on VBAT pin.

When the backup domain is supplied by V_{DD} (analog switch connected to V_{DD}), the following pins are available:

- PC14 and PC15, which can be used as GPIO pins
- PC14 and PC15, which can be configured by LSE
- PA0/RTC_TAMP2 when configured by the RTC as tamper pin

Note: As the analog switch can transfer only a limited amount of current (3 mA), the use of GPIO PC14 to PC15 in output mode is restricted: the speed must be limited to 2 MHz with a maximum load of 30 pF, and these I/Os cannot be used as current sources (e.g. to drive a LED).

When the backup domain is supplied by V_{BAT} (analog switch connected to V_{BAT} because V_{DD} is not present), the following functions are available:

- PC14 and PC15 can be controlled only by LSE
- PA0/RTC_TAMP2 when configured by the RTC as tamper pin

Backup domain access

After a system reset, the backup domain (RTC registers and backup registers) is protected against possible unwanted write accesses. To enable access to the backup domain, set the DBP bit in the *PWR control register 1 (PWR_CR1)* to enable access to the backup domain.

VBAT battery charging

When V_{DD} is present, it is possible to charge the external battery on VBAT through an internal resistance.

The VBAT charging is done either through a 5 kΩ resistor or through a 1.5 kΩ resistor, depending upon the VBRS bit value in the *PWR control register 4 (PWR_CR4)*.

The battery charging is enabled by setting VBE bit in the *PWR control register 4 (PWR_CR4)*, and automatically disabled in VBAT mode.

6.1.3 Voltage regulator

Two embedded linear voltage regulators supply all the digital circuitries, except for the Standby circuitry and the backup domain.

The voltage regulators are always enabled after a reset. Depending on the application modes, the V_{CORE} supply is provided either by the main regulator (MR) or by the low-power regulator (LPR).

- In Run, Sleep and Stop0 modes, both regulators are enabled and the main regulator (MR) supplies full power to the V_{CORE} domain (core, memories and digital peripherals).
- In low-power run and low-power sleep modes, the main regulator is off and the low-power regulator (LPR) supplies low power to the V_{CORE} domain, preserving the contents of the registers and internal SRAM1 and SRAM2.
- In Stop1 mode the main regulator is off and the low-power regulator (LPR) supplies low power to the V_{CORE} domain, preserving the contents of the registers and of internal SRAM1 and SRAM2.
- In Standby mode with SRAM1, SRAM2a and SRAM2b content preserved (RRS bit is set in the *PWR control register 3 (PWR_CR3)*), the main regulator (MR) is off and the low-power regulator (LPR) provides the supply to SRAM1, SRAM2a and SRAM2b. The core and digital peripherals (except Standby circuitry and backup domain) are powered

off.

- In Standby mode, both regulators are powered off. The contents of the registers is lost except for the Standby circuitry and the backup domain.
- In Shutdown mode, both regulators are powered off. When exiting from Shutdown mode, a power-on reset is generated. Consequently, the contents of the registers and of both SRAM1 and SRAM2 is lost, except for the backup domain.

6.2 Power supply supervisor

6.2.1 Power-on reset (POR) / power-down reset (PDR) / brown-out reset (BOR)

The device has an integrated power-on reset / power-down reset, coupled with a brown-out reset circuitry.

Five BOR thresholds can be selected through option bytes.

The BOR can be used in two operating modes, configured by the BORHC bit in *PWR control register 5 (PWR_CR5)*:

- Reset mode, where a system reset is generated when the V_{DD} supply is below the selected BOR threshold.
- Force SMPS step-down converter in Bypass mode when the V_{DD} supply is below the selected BOR threshold. When the V_{DD} supply is below the lowest BOR level a system reset is always generated.

The BOR is active in all power modes except Shutdown mode, and cannot be disabled. The BOR mechanism needs to be enabled, and can be disabled at any time if needed.

Reset mode

During power-on, the BOR keeps the device under reset until the supply voltage V_{DD} reaches the specified V_{BORx} threshold. When V_{DD} drops below the selected threshold, a device reset is generated. When V_{DD} is above the V_{BORx} upper limit, the device reset is released and the system can start.

Force SMPS step-down converter Bypass mode

During power-on, the BOR keeps the device under reset until the supply voltage V_{DD} reaches the specified V_{BORX} threshold. When V_{DD} drops below V_{BOR0}, a device reset is generated. When V_{DD} is above the V_{BORX} upper limit, the device reset is released and the system can start.

To enter and during the SMPS step-down converter in SMPS mode the selected BORx (x = 1, 2, 3, 4) threshold is used to determine if SMPS mode is used or if the SMPS step-down converter is forced in Bypass mode. When V_{DD} drops below the selected threshold, the SMPS step-down converter when entering or in SMPS mode, is forced in Bypass mode. An SMPS step-down converter force Bypass interrupt (SMPSFBF) may be generated when enabled. When V_{DD} rises above the selected BOR upper limit, a BOR interrupt (BORHF) may be generated when enabled. It is up to software to set the SMPS step-down converter in SMPS mode.

For more details on the brown-out reset thresholds refer to the electrical characteristics section in the datasheet.

Figure 9. Brown-out reset waveform

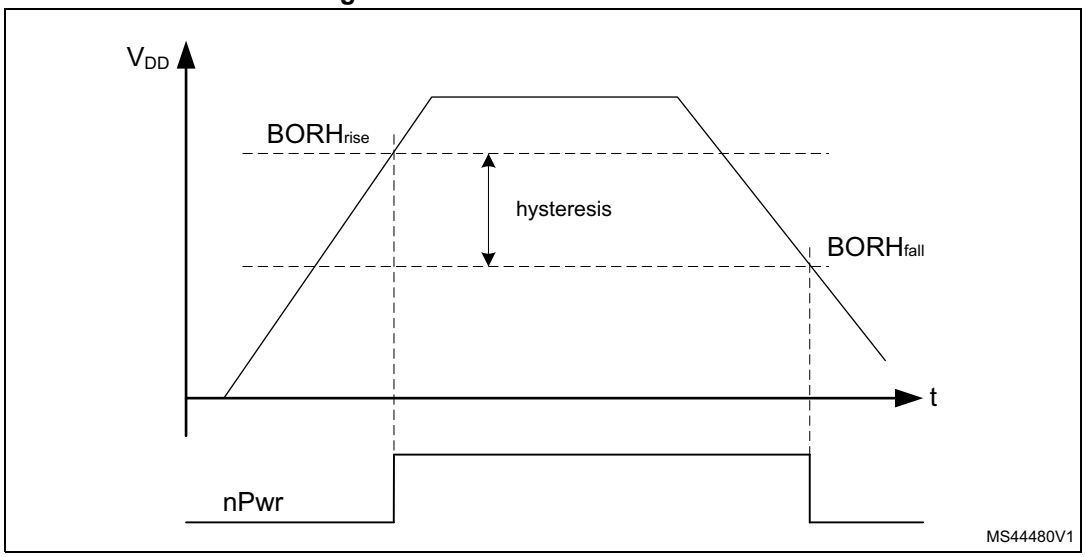

1. The reset temporization $t_{RSTTEMPO}$ is present only for the BOR lowest threshold (V_{BOR0}).

6.2.2 Programmable voltage detector (PVD)

The PVD can be used to monitor the V_{DD} power supply by comparing it to a threshold selected by the PLS[2:0] bits in the *PWR control register 2 (PWR_CR2)*.

The PVD can also be used to monitor a voltage level on the PVD_IN pin. In this case the voltage level on PVD_IN is compared to the internal VREFINT level.

The PVD is enabled by setting the PVDE bit.

A PVDO flag is available, in the *PWR status register 2 (PWR_SR2)*, to indicate if V_{DD} or the voltage level on PVD_IN is higher or lower than the PVD threshold. This event is internally connected to the EXTI Line16 and can generate an interrupt if enabled through the EXTI registers.

The PVD output interrupt can be generated when V_{DD} or the voltage level on PVD_IN drops below the PVD threshold, and/or when V_{DD} or the voltage level on PVD_IN rises above the PVD threshold, depending on EXTI Line16 rising/falling edge configuration. If the EXTI Line16 is configured to rising/falling edge sensitivity (rising/falling edge of PVDO), the interrupt is generated when V_{DD} or the voltage level on PVD_IN drops below/rises above the PVD threshold. As an example, the service routine can perform emergency shutdown tasks.

Figure 10. PVD thresholds

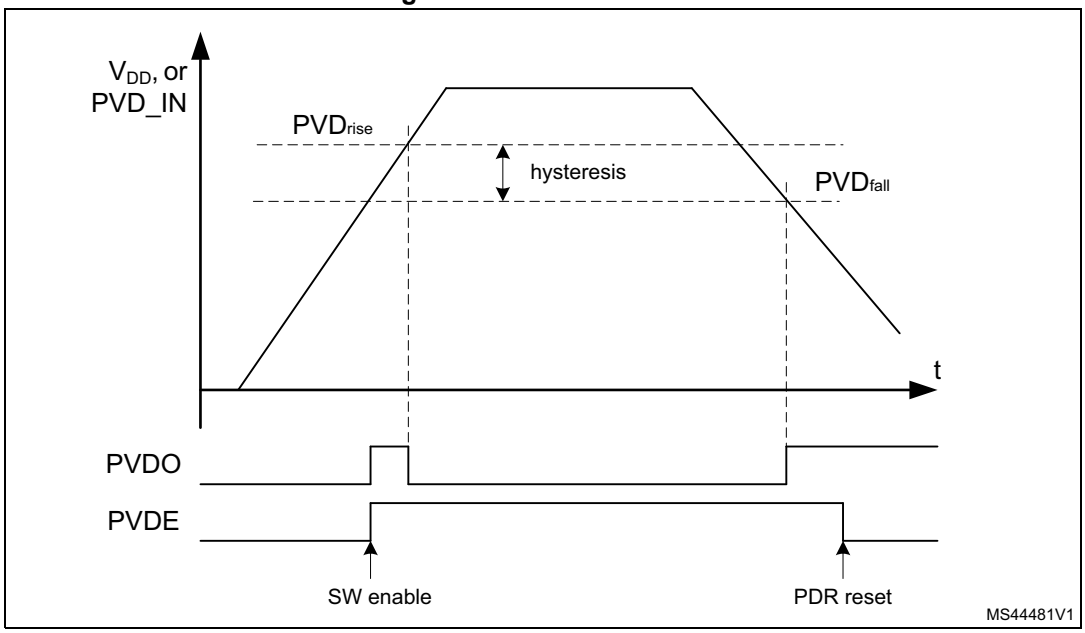

6.2.3 Peripheral voltage monitoring (PVM)

Only V_{DD} is monitored by default, as it is the only supply required for all system-related functions. The other supply (V_{DDA}) can be independent from V_{DD} and can be monitored by the peripheral voltage monitoring (PVM).

Each PVM is a comparator between a fixed threshold V_{PVMx} and the selected power supply. PVMOx flags indicate if the independent power supply is higher or lower than the PVMx threshold: PVMOx flag is cleared when the supply voltage is above the PVMx threshold, and is set when the supply voltage is below the PVMx threshold.

Each PVM output is connected to an EXTI line and can generate an interrupt if enabled through the EXTI registers. The PVMx output interrupt is generated when the independent power supply drops below the PVMx threshold and/or when it rises above the PVMx threshold, depending on EXTI line rising/falling edge configuration.

Each PVM can remain active in Stop0 and Stop1 modes, and the PVM interrupt can wake up from the Stop mode.

Table 22. PVM features

PVM	Power supply	PVM threshold	EXTI line
PVM1	Not used	-	-
PVM2	Not used	-	-
PVM3	V_{DDA}	V_{PVM3} (~ 1.65 V)	33
PVM4	Not used	-	-

The independent supply (V_{DDA}) is not considered as present by default, and a logical and electrical isolation is applied to ignore any information coming from the peripherals supplied by this dedicated source.

- If this supply is shorted externally to V_{DD}, the application must assume that it is available without enabling any PVM.
- If this supply is independent from V_{DD}, the PVM can be enabled to confirm whether the supply is present or not.

The following sequence must be applied before using analog to digital converters, digital to analog converters, comparators, operational amplifiers, voltage reference buffer:

1. If V_{DDA} is independent from V_{DD}:
   a) Enable the PVM3 by setting PVME3 bit in the *PWR control register 2 (PWR_CR2)*
   b) Wait for the PVM3 wake-up time
   c) Wait until PVMO3 bit is cleared in the *PWR status register 2 (PWR_SR2)*
   d) Optional: disable the PVM3 for consumption saving
2. Enable the analog peripheral, which automatically removes the V_{DDA} isolation.

6.3 CPU2 boot

Booting of the CPU2 is controlled by the C2BOOT bit in *PWR control register 4 (PWR_CR4)* register. This allows the CPU1 to initialize the system after a reset or wake-up from system Low-power mode, before booting the CPU2.

- Following reset the CPU2 is prevented from booting by the C2BOOT bit. The CPU2 boots only once the CPU1 has set the C2BOOT bit.
- When exiting from system low power modes STOP0, STOP1 or STANDBY the C2BOOT bit controls the CPU2 booting.
  – When C2BOOT = 1, after a system low power mode the CPU2 boots when it is woken up via a wake-up source.
  – When C2BOOT = 0, after a system low power mode the CPU2 is prevented from booting. Instead on a CPU2 wake-up source the CPU1 is woken up via a C2HF. It is up to the CPU1 to boot the CPU2 by setting the C2BOOT bit.

Figure 11. CPU2 boot options

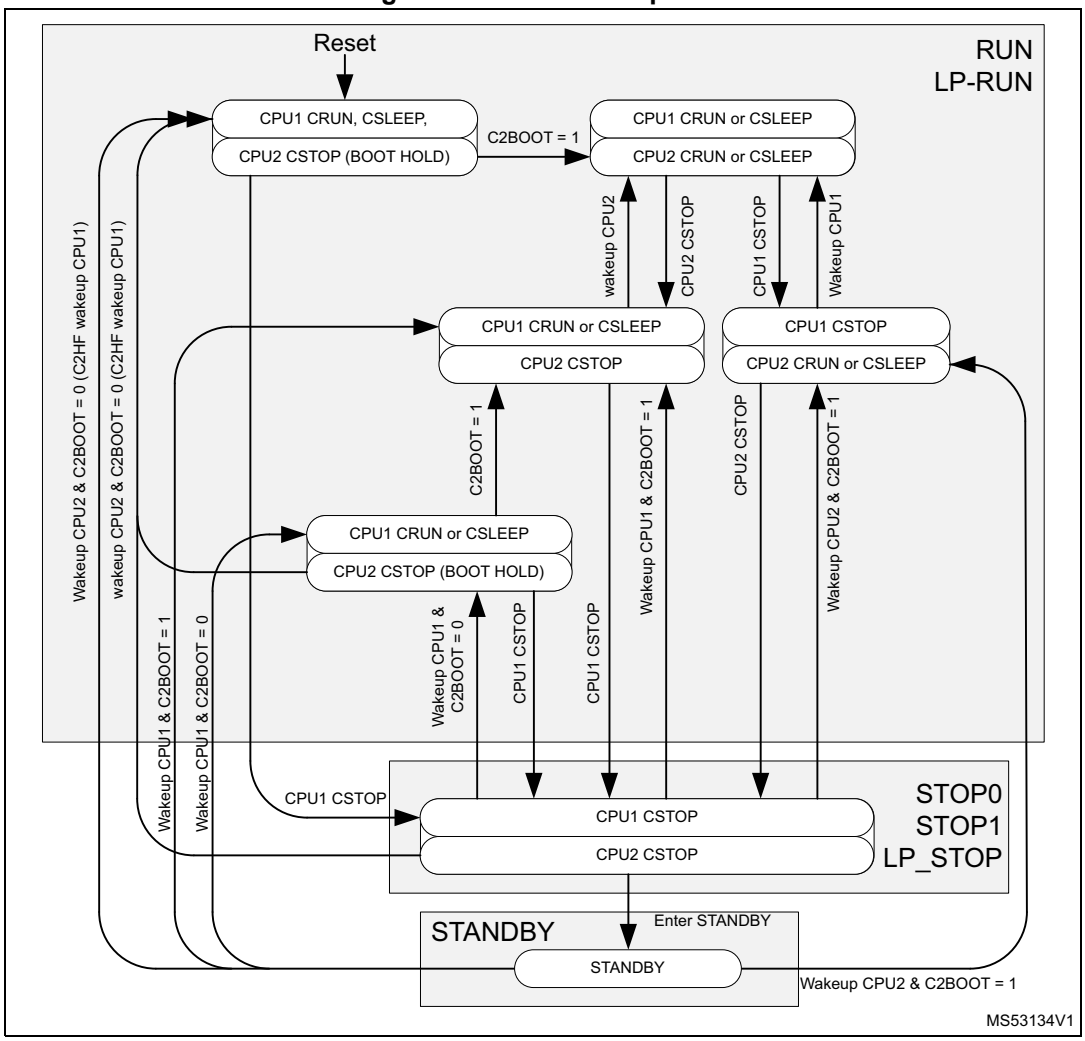

When the CPU2 is prevented from booting, the wake-up from Low-power mode boot procedure is the following:

- Before the CPU1 enters CSTOP mode it clears the C2BOOT bit.
- When CPU1 exits CSTOP:
  - When the system remains in Run mode, it sets the C2BOOT bit, and subsequently processes the wake-up event.
  - When the system exits from a low power mode from a CPU1 wake-up source, it initialize the system and sets the C2BOOT bit, and subsequently processes the wake-up event.
  - When the system exits from a low power mode from the C2HF wake-up source, it initializes the system and set the C2BOOT bit, and subsequently goes back to CSTOP.

- There is no special wake-up procedure for the CPU2. When the CPU2 wakes up, the system has been initialized by the CPU1. So the CPU2 can directly process the wake-up event.

When the system remains in Run mode (due to the Radio system) the CPU2 wakes up from CSTOP mode independently from the C2BOOT setting.

6.4 Low-power modes

By default, the microcontroller is in Run mode after a system or a power Reset and at least one CPU is in CRun mode executing code. Low-power modes are available to save power when the CPU does not need to be kept running, for example when it is waiting for an external event. The user has to select the mode that gives the best compromise between consumption, startup time and available wake-up sources.

The individual CPUs feature two low power modes, entered by the CPU when executing WFI, WFE or on return from an exception handler when SLEEPONEXIT is enabled.

- CSleep mode: when the CPU enters low power mode and SLEEPDEEP is disabled, Arm® “sleep mode”.
- CStop mode: when the CPU enters low power mode and SLEEPDEEP is enabled, Arm® “sleepdeep mode”.

The device features several low-power modes:

- *Sleep mode*: CPU clock off, all peripherals including CPU core peripherals (among them NVIC, SysTick) can run and wake up the CPU when an interrupt or an event occurs.
- *Low-power run mode (LP run)*: This mode is achieved when the system clock frequency is reduced below 2 MHz. The code is executed from the SRAM or from the flash memory. The regulator is in low-power mode to minimize the operating current.
- *Low-power sleep mode (LP sleep)*: This mode is entered from the Low-power run mode: CPU is off.
- *Stop0 mode* and *Stop1 mode*: the content of SRAM1, SRAM2 and of all registers is retained. All clocks in the V_{CORE} domain are stopped, the PLL, the MSI, the HSI16 and the HSE are disabled. The LSI and the LSE can be kept running.

  The RTC can remain active (Stop mode with RTC, Stop mode without RTC).

  Some peripherals with the wake-up capability can enable the HSI16 RC during Stop mode to detect their wake-up condition.

  In Stop0 mode, the main regulator remains ON, resulting in the fastest wake-up time, but with much higher consumption. The active peripherals and wake-up sources are the same as in Stop1 mode.

  The system clock, when exiting from Stop0 or Stop1 mode, can be either MSI up to 48 MHz or HSI16, depending on the software configuration.
- *Standby mode*: V_{CORE} domain is powered off. However, it is possible to preserve the SRAM1, SRAM2a and SRAM2b contents:
  - Standby mode with SRAM1, SRAM2a and SRAM2b retention when bit RRS is set in the *PWR control register 3 (PWR_CR3)*. In this case, SRAM1, SRAM2a and SRAM2b are supplied by the low-power regulator.
  - Standby mode when bit RRS is cleared in the *PWR control register 3 (PWR_CR3)*.

In this case the main regulator and the low-power regulator are powered off.

All clocks in the V_{CORE} domain are stopped, the PLL, the MSI, the HSI16 and the HSE are disabled. The LSI and the LSE can be kept running.

The RTC can remain active (Standby mode with RTC, Standby mode without RTC).

The system clock, when exiting Standby modes, is HSI16.

- *Shutdown mode*: V_{CORE} domain is powered off. All clocks in the V_{CORE} domain are stopped, the PLL, the MSI, the HSI16, the LSI and the HSE are disabled. The LSE can be kept running. The system clock, when exiting Shutdown mode, is MSI at 4 MHz. In this mode, the supply voltage monitoring is disabled and the product behavior is not guaranteed in case of a power voltage drop.

Note: Stop, Standby, and Shutdown modes are only entered when both CPUs are in CStop mode.

In addition, the power consumption in Run mode can be reduced by slowing down the system clocks, and/or by gating the clocks to the APB and AHB peripherals when they are unused.

The system operation mode depend on the CPU1, the CPU2 and the Radio sub-system operating mode. The system enters a low power mode only when all three sub-systems allow it to do so.

After a system reset the CPU1 is in CRUN mode. The CPU2 boots only if enabled by the CPU1 via the C2BOOT register bit. As long as the CPU1 does not boot the CPU2, the device operates as a single CPU system. The CPU1 can enter and wake up from system low power modes on its own.

When CPU2 has boot, the CPU1, CPU2 and Radio sub-systems can enter and wake up from system low power modes on their own. The different wake-up sources for the different sub-systems are detailed in *Table 23*.

Table 23. Sub-system low power wake-up sources

Wake-up source	CPU1	CPU2	Radio
EXTI	From Stop modes	From Stop modes	Not available
RTC	From Stop and Standby modes	From Stop and Standby modes	Not available
WKUP	From Stop and Standby modes	From Stop and Standby modes	Not available
SMPS	From Stop	From Stop	Not available
RADIO	From Stop	From Stop	Not available
RFWAKEUP	Not available	From Stop and Standby modes	From Stop and Standby modes

The system low power mode to enter depends on the allowed mode selected by both CPUs in the LPMS bits of *PWR control register 1 (PWR_CR1)* and *PWR CPU2 control register 1 (PWR_C2CR1)*. This is also valid when CPU2 is kept in hold by C2BOOT.

Figure 12 shows the operating modes state diagram. The CPU1, CPU2 and Radio sub-systems operate interdependently, according to their own sub-system states. Each sub-system has its own wake-up sources, to wake up from Stop and Standby modes. For the device to be in Stop, Standby or Shutdown mode, all three sub-systems need to be in CStop. When one sub-system enters CRun mode, the device enters Run mode.

Figure 12. Low-power modes possible transitions

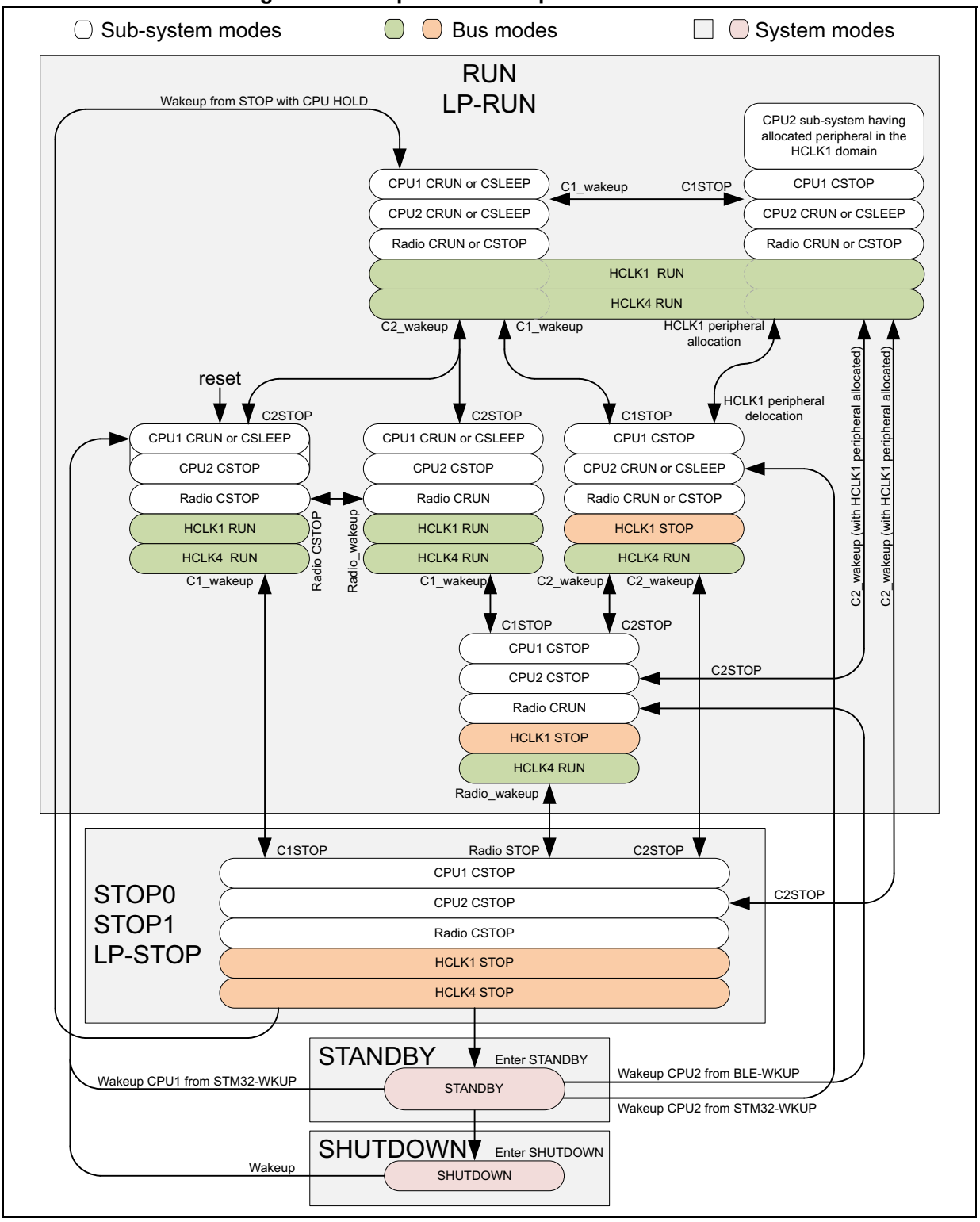

Table 24. Low-power mode summary

Mode name	Entry	Wakeup source[1]	Wakeup system clock	Effect on clocks	Voltage regulator	
					MR	LPR
Sleep (Sleep-now or Sleep-on-exit)	WFI or Return from ISR	Any interrupt	Same as before entering Sleep mode	CPU clock OFF No effect on other clocks or analog clock sources	ON	ON
	WFE	Wakeup event				
Low-power run	Set LPR bit	Clear LPR bit	Same as Low-power run clock	None	OFF	
Low-power sleep	Set LPR bit + WFI or Return from ISR	Any interrupt	Same as before entering Low-power sleep mode	CPU clock OFF No effect on other clocks or analog clock sources		
	Set LPR bit + WFE	Wakeup event				
Stop0	LPMS=”000” + SLEEPDEEP bit + WFI or Return from ISR or WFE	Any EXTI line (configured in the EXTI registers). Specific peripherals events	HSI16 when STOPWUCK=1 in RCC_CFGR. MSI with the frequency before entering the Stop mode when STOPWUCK=0.	All clocks OFF except LSI and LSE	ON	ON
Stop1	LPMS=”001” + SLEEPDEEP bit + WFI or Return from ISR or WFE				OFF	
Standby with SRAM2a	LPMS=”011”+ Set RRS bit + SLEEPDEEP bit + WFI or Return from ISR or WFE	WKUP pin edge, RTC event, LSECSS, external reset in NRST pin, IWDG reset	HSI16			
Standby	LPMS=”011” + Clear RRS bit + SLEEPDEEP bit + WFI or Return from ISR or WFE	WKUP pin edge, RTC event, LSECSS, external reset in NRST pin, IWDG reset				OFF
Shutdown	LPMS = ”1--” + SLEEPDEEP bit + WFI or Return from ISR or WFE	WKUP pin edge, RTC event, external reset in NRST pin	MSI 4 MHz	All clocks OFF except LSE	OFF	OFF

1. Refer to *Table 25*.

Table 25. Functionalities depending on system operating mode[1]

Peripheral	Run	Sleep	Low-power run	Low-power sleep	Stop0		Stop1		Standby		Shutdown		VBAT
					-	Wakeup capability	-	Wakeup capability	-	Wakeup capability	-	Wakeup capability	
CPU1	Y	-	Y	-	-	-	-	-	-	-	-	-	-
CPU2	Y	-	Y	-	-	-	-	-	-	-	-	-	-
Radio-system (BLE)	Y	Y	-	-	-	Y	-	Y	-	Y[2]	-	-	-
Flash memory	Y	Y	O	O	R	-	R	-	R	-	R	-	R
SRAM1	Y	O[3]	Y	O[3]	R	-	R	-	O[4]	-	-	-	-
SRAM2a	Y	O[3]	Y	O[3]	R	-	R	-	O[4]	-	-	-	-
SRAM2b	Y	O[3]	Y	O[3]	R	-	R	-	O[4]	-	-	-	-
Backup registers	Y	Y	Y	Y	R	-	R	-	R	-	R	-	R
Brown-out reset (BOR)	Y	Y	Y	Y	Y	Y	Y	Y	Y	Y	-	-	-
Brown-out SMPS force bypass (BOR)	Y	Y	Y	Y	Y	Y	-	-	-	-	-	-	-
Programmable voltage detector (PVD)	O	O	O	O	O	O	O	O	-	-	-	-	-
Peripheral voltage monitor (PVMx; x = 3)	O	O	O	O	O	O	O	O	-	-	-	-	-
DMAx (x = 1)	O	O	O	O	-	-	-	-	-	-	-	-	-
High speed internal (HSI16)	O	O	O	O	O[5]	-	O[5]	-	-	-	-	-	-
High speed external (HSE)	O	O	O	O	-	-	-	-	-	-	-	-	-
Low speed internal (LSI)	O	O	O	O	O	-	O	-	O	-	-	-	-
Low speed external (LSE)	O	O	O	O	O	-	O	-	O	-	O	-	O
Multi-speed internal (MSI)	O	O	O	O	-	-	-	-	-	-	-	-	-
Clock security system (CSS)	O	O	O	O	-	-	-	-	-	-	-	-	-
Clock security system on LSE	O	O	O	O	O	O	O	O	O	O	-	-	-
RTC / Auto wake-up	O	O	O	O	O	O	O	O	O	O	O	O	O
Number of RTC tamper pins	1	1	1	1	1	O	1	O	1	O	1	O	1
USART1	O	O	O	O	O[6]	O[6]	O[6]	O[6]	-	-	-	-	-
Low-power UART (LPUART)	O	O	O	O	O[6]	O[6]	O[6]	O[6]	-	-	-	-	-
I2C1	O	O	O	O	O[7]	O[7]	O[7]	O[7]	-	-	-	-	-
SPIx (x = 1)	O	O	O	O	-	-	-	-	-	-	-	-	-
ADC1	O	O	O	O	-	-	-	-	-	-	-	-	-
COMPx (x = 1)	O	O	O	O	O	O	O	O	-	-	-	-	-

Table 25. Functionalities depending on system operating mode[1] (continued)

Peripheral	Run	Sleep	Low-power run	Low-power sleep	Stop0		Stop1		Standby		Shutdown		VBAT
					-	Wakeup capability	-	Wakeup capability	-	Wakeup capability	-	Wakeup capability	
Temperature sensor	O	O	O	O	-	-	-	-	-	-	-	-	-
Timers (TIMx, x = 1, 2)	O	O	O	O	-	-	-	-	-	-	-	-	-
Low-power timer 1 (LPTIM1)	O	O	O	O	O	O	O	O	-	-	-	-	-
Low-power timer 2 (LPTIM2)	O	O	O	O	O	O	O	O	-	-	-	-	-
Independent watchdog (IWDG)	O	O	O	O	O	O	O	O	O	O	-	-	-
Window watchdog (WWDG)	O	O	O	O	-	-	-	-	-	-	-	-	-
SysTick timer	O	O	O	O	-	-	-	-	-	-	-	-	-
Touch sensing controller (TSC)	O	O	O	O	-	-	-	-	-	-	-	-	-
True random number generator (RNG)	O	O	-	-	-	-	-	-	-	-	-	-	-
AES hardware accelerator	O	O	O	O	-	-	-	-	-	-	-	-	-
CRC calculation unit	O	O	O	O	-	-	-	-	-	-	-	-	-
IPCC	O	-	O	-	-	-	-	-	-	-	-	-	-
HSEM	O	-	O	-	-	-	-	-	-	-	-	-	-
PKA	O	O	O	O	-	-	-	-	-	-	-	-	-
GPIOs	O	O	O	O	O	O	O	O	[8]	2 pins[9]	[10]	2 pins[9]	-

1. Legend: Y = Yes (enabled). O = Optional (disabled by default, can be enabled by software). R = data retained. - = Not available. Gray cells indicate Wakeup capability.
2. The content of SRAM1, SRAM2a and SRAM2b needs to be retained via the PWR_CR3.RRS bit.
3. The SRAM clock can be gated on or off.
4. The SRAM1, SRAM2a and SRAM2b content can optionally be retained when the PWR_CR3.RRS bit is set,
5. Some peripherals with wake-up from Stop capability can request HSI16 to be enabled. In this case, HSI16 is woken up by the peripheral, and only feeds the peripheral which requested it. HSI16 is automatically put off when the peripheral does not need it anymore.
6. UART and LPUART reception is functional in Stop mode, and generates a wake-up interrupt on Start, address match or received frame event.
7. I2C address detection is functional in Stop mode, and generates a wake-up interrupt in case of address match.
8. I/Os can be configured with internal pull-up, pull-down or floating in Standby mode.
9. The I/Os with wake-up from Standby/Shutdown capability are PA0 and PA2.
10. I/Os can be configured with internal pull-up, pull-down or floating in Shutdown mode but the configuration is lost when exiting the Shutdown mode.

Debug mode

By default, the debug connection is lost if the application puts the MCU in Stop0, Stop1, Standby or Shutdown mode while the debug features are used. This is because the CPU1 core is no longer clocked.

However, by setting some configuration bits in the DBGMCU_CR register, the software can be debugged even when using the low-power modes extensively. For more details refer to *Section 33.3.5: Debug and low power modes*.

6.4.1 Run mode

Slowing down system clocks

In Run mode, the speed of the system clocks (SYSCLK, HCLK, PCLK) can be reduced by programming the prescaler registers. These prescalers can also be used to slow down the peripherals before entering Sleep mode.

For more details, refer to *Section 8.4.3: RCC clock configuration register (RCC_CFGR)*.

Peripheral clock gating

In Run mode, the HCLK and PCLK for individual peripherals and memories can be stopped at any time to reduce the power consumption.

To further reduce the power consumption in Sleep mode, the peripheral clocks can be disabled prior to executing WFI or WFE instructions.

The peripheral clock gating is controlled by the RCC_AHBxENR and RCC_APBxENR registers.

Disabling the peripherals clocks in Sleep mode can be performed automatically by resetting the corresponding bit in the RCC_AHBxSMENR and RCC_APBxSMENR registers.

6.4.2 Low-power run mode (LP run)

To further reduce the consumption when the system is in Run mode, the regulator can be configured in low-power mode. In this mode, the system frequency must not exceed 2 MHz. The Radio sub-system cannot be used in low-power Run mode.

Refer to the product datasheet for more details on voltage regulator and peripherals operating conditions.

I/O states in Low-power run mode

In Low-power run mode, all I/O pins keep the same state as in Run mode.

Entering Low-power run mode

To enter the Low-power run mode, proceed as follows:

1. Optional: Jump into the SRAM and power-down the flash memory by setting the FPDR bit in *PWR control register 1 (PWR_CR1)* and *PWR CPU2 control register 1 (PWR_C2CR1)*.
2. Decrease the system clock frequency below 2 MHz.
3. Force the regulator in low-power mode by setting the LPR bit in the *PWR control register 1 (PWR_CR1)*.

Refer to *Table 26* on how to enter the Low-power run mode.

Exiting Low-power run mode

To exit the Low-power run mode, proceed as follows (refer to *Table 26*):

1. Force the regulator in main mode by clearing the LPR bit in the *PWR control register 1 (PWR_CR1)*.
2. Wait until REGLPF bit is cleared in the *PWR status register 2 (PWR_SR2)*.
3. Increase the system clock frequency.

Table 26. Low-power run

Low-power run mode	Description
Mode entry	Decrease the system clock frequency below 2 MHz LPR = 1
Mode exit	LPR = 0 Wait until REGLPF = 0 Increase the system clock frequency
Wakeup latency	Regulator wake-up time from low-power mode

6.4.3 Entering Low-power mode

Low power modes are entered by the MCU by executing WFI (Wait for Interrupt), or WFE (Wait for Event) instructions, or when the SLEEPONEXIT bit in the CPU1 System control register is set on Return from ISR.
Entering Low-power mode through WFI or WFE is executed only if no interrupt is pending or no event is pending.

6.4.4 Exiting Low-power mode

From Sleep modes, and Stop modes the MCU exit Low-power mode depending on the way the mode was entered:

- If the WFI instruction or Return from ISR was used to enter the Low-power mode, any peripheral interrupt acknowledged by the NVIC can wake up the device.
- If the WFE instruction is used to enter the Low-power mode, the MCU exits the Low-power mode as soon as an event occurs. The wake-up event can be generated either by an NVIC IRQ interrupt, or by an event.
  - In the first case, when SEVONPEND = 0 in the CPU System control register, enabling an interrupt in the peripheral control register and in the NVIC. When the MCU resumes from WFE, the peripheral interrupt pending bit and the NVIC peripheral IRQ channel pending bit (in the NVIC interrupt clear pending register) have to be cleared. Only NVIC interrupts with sufficient priority wake-up and interrupt the MCU.
    When SEVONPEND = 1 in the CPU System control register, enabling an interrupt in the peripheral control register and optionally in the NVIC. When the MCU resumes from WFE, the peripheral interrupt pending bit and when enabled the NVIC peripheral IRQ channel pending bit (in the NVIC interrupt clear pending register) have to be cleared. All NVIC interrupts wake up the MCU, even the disabled ones. Only enabled NVIC interrupts with sufficient priority wake up and

interrupt the MCU.

– In the second case, configuring an EXTI line in event mode. When the CPU resumes from WFE, it is not necessary to clear the EXTI peripheral interrupt pending bit or the NVIC IRQ channel pending bit as the pending bits corresponding to the event line is not set. It may be necessary to clear the interrupt flag in the peripheral.

From Standby and Shutdown modes the MCU exits Low-power mode through an external reset (NRST pin), an IWDG reset, a rising/falling edge on one of the enabled WKUPx pins, or an RTC event (see *Section 24: Real-time clock (RTC)*), or a Radio event (for Standby only).

After waking up from Standby or Shutdown mode, program execution restarts in the same way as after a Reset (boot pin sampling, option bytes loading, reset vector is fetched, etc.).

The system mode when the CPU wakes up from CStop mode can be determined from the CnSTOPF and CnSBF in *PWR extended status and status clear register (PWR_EXTSCR)*.

Table 27. CPU CSTOP wake-up vs. system operating mode

System mode	CPU1		CPU2		CPU1 wake-up	CPU2 wake-up
	C1SBF	C1STOPF	C2SBF	C2STOPF		
Run	0	0	0	0	Wakeup from Run	Wakeup from Run
	0	1	0	0	Wakeup from STOP, but system is already in Run due to CPU2	Wakeup from Run
	0	0	0	1	Wakeup from Run	Wakeup from STOP, but system is already in Run due to CPU1
	1	0	0	0	Wakeup from STANDBY, but system is already in Run due to CPU2	Wakeup from Run
	0	0	1	0	Wakeup from Run	Wakeup from STANDBY, but system is already in Run due to CPU1
	1	1	0	0	Wakeup from STANDBY followed by STOP, but system is already in Run due to CPU2	Wakeup from Run
	0	0	1	1	Wakeup from Run	Wakeup from STANDBY followed by STOP, but system is already in Run due to CPU1
Stop	0	1	0	1	Wakeup from STOP (CPU2 still in CSTOP)	Wakeup from STOP (CPU1 still in CSTOP)
	1	1	0	1	Wakeup from STOP after the system has been in STANDBY (CPU2 still in CSTOP)	Wakeup from STOP (CPU1 still in CSTOP)
	0	1	1	1	Wakeup from STOP (CPU2 is still in CSTOP)	Wakeup from STOP after the system having been in STANDBY (CPU1 still in CSTOP)

Table 27. CPU CSTOP wake-up vs. system operating mode (continued)

System mode	CPU1		CPU2		CPU1 wake-up	CPU2 wake-up
	C1SBF	C1STOPF	C2SBF	C2STOPF		
Standby	1	0	1	0	Wakeup from STANDBY (CPU2 still in CSTOP)	Wakeup from STANDBY (CPU1 still in CSTOP)
N.A.	Others				Not valid, does not occur	

6.4.5 Sleep mode

I/O states in Sleep mode

In Sleep mode, all I/O pins keep the same state as in Run mode.

Entering Sleep mode

Sleep mode is entered according to *Entering Low-power mode*, when the SLEEPDEEP bit in the CPU System control register is cleared (see *Table 28).*

Exiting Sleep mode

The MCU exits from Sleep mode (see *Table 28)* as indicated in *Exiting Low-power mode*.

Table 28. Sleep mode

Sleep-now mode	Description
Mode entry	WFI (Wait for Interrupt) or WFE (Wait for Event) while: – SLEEPDEEP = 0 – No interrupt (for WFI) or event (for WFE) is pending Refer to the Cortex® System control register.
	On return from ISR while: – SLEEPDEEP = 0 and – SLEEPONEXIT = 1 – No interrupt is pending Refer to the Cortex® System control register.
Mode exit	If WFI or return from ISR was used for entry: Interrupt: refer to *Table 54: CPU1 vector table* and *Table 55: CPU2 vector table* If WFE was used for entry and SEVONPEND = 0: Wakeup event: refer to *Section 13.4: Interrupt list* If WFE was used for entry and SEVONPEND = 1: Interrupt even when disabled in NVIC: refer to *Table 54: CPU1 vector table* and *Table 55: CPU2 vector table* or Wakeup event: refer to *Section 13.4: Interrupt list*
Wakeup latency	None

6.4.6 Low-power sleep mode (LP sleep)

Refer to the product datasheet for more details on voltage regulator and peripherals operating conditions.

I/O states in Low-power sleep mode

In Low-power sleep mode, all I/O pins keep the same state as in Run mode.

Entering Low-power sleep mode

Low-power sleep mode is entered from Low-power run mode as described in *Section 6.4.3*, when the SLEEPDEEP bit in the Cortex® System control register is cleared.

Refer to *Table 29* for details on how to enter the Low-power sleep mode.

Exiting Low-power sleep mode

The low-power Sleep mode is exited as described in *Section 6.4.4*. When exiting Low-power sleep mode by issuing an interrupt or an event, the MCU is in Low-power run mode.

Refer to *Table 29* for details on how to exit the Low-power sleep mode.

Table 29. Low-power sleep

Low-power sleep-now mode	Description
Mode entry	Low-power sleep mode is entered from the Low-power run mode. WFI (Wait for Interrupt) or WFE (Wait for Event) while: – SLEEPDEEP = 0 – No interrupt (for WFI) or event (for WFE) is pending Refer to the Cortex® System control register.
	Low-power sleep mode is entered from the Low-power run mode. On return from ISR while: – SLEEPDEEP = 0 and – SLEEPONEXIT = 1 – No interrupt is pending Refer to the Cortex® System control register.
Mode exit	If WFI or Return from ISR was used for entry: Interrupt: refer to *Table 54: CPU1 vector table* and *Table 55: CPU2 vector table* If WFE was used for entry and SEVONPEND = 0: Wakeup event: refer to *Section 13.4: Interrupt list* If WFE was used for entry and SEVONPEND = 1: Interrupt even when disabled in NVIC: refer to *Table 54: CPU1 vector table* and *Table 55: CPU2 vector table* Wakeup event: refer to *Section 13.4: Interrupt list* After exiting the Low-power sleep mode, the MCU is in Low-power run mode.
Wakeup latency	None

6.4.7 Stop0 mode

The Stop0 mode is based on the CPU deep sleep mode combined with the peripheral clock gating. The voltage regulator is configured in main regulator mode. In Stop0 mode, all clocks in the V_{CORE} domain are stopped; the PLL, the MSI, the HSI16 and the HSE oscillators are disabled. Some peripherals with wake-up capability (I2Cx (x=1), USART1 and LPUART) can switch on the HSI16 to receive a frame, and switch off the HSI16 after receiving the frame if it is not a wake-up frame. In this case, the HSI16 clock is propagated only to the peripheral requesting it.

SRAM1, SRAM2 and register contents are preserved.

The BOR is always available in Stop0 mode. The consumption increases when thresholds higher than V_{BOR0} are used.

I/O states in Stop0 mode

In the Stop0 mode, all I/O pins keep the same state as in the Run mode.

Entering Stop0 mode

The Stop0 mode is entered according to *Section 6.4.3*, when the SLEEPDEEP bit in the Cortex System control register is set (see *Table 30*). Before entering the mode, the system clock must be set to HSI16 clock.

If flash memory programming is ongoing, the Stop0 mode entry is delayed until the operation is completed.

If an access to the APB domain is ongoing, the Stop0 mode entry is delayed until the APB access is finished.

In Stop0 mode, the following features can be selected by programming individual control bits:

- Independent watchdog (IWDG): the IWDG is started by writing to its Key register or by hardware option. Once started, it cannot be stopped except by a reset. See *Section 25.3: IWDG functional description*.
- Real-time clock (RTC): this is configured by the RTCEN bit in the *RCC backup domain control register (RCC_BDCR)*.
- Internal RC oscillator (LSI): this is configured by the LSIxON bit in the *RCC control/status register (RCC_CSR)*.
- External 32.768 kHz oscillator (LSE): this is configured by the LSEON bit in the *RCC backup domain control register (RCC_BDCR)*.

Some peripherals can be used in Stop0 mode and add consumption if they are enabled and clocked by LSI or LSE, or when they request the HSI16 clock, namely LPTIM1, LPTIM2, I2Cx (x=1), USART1, LPUART.

The comparators as well as the PVMx (x=3) and the PVD can be used in Stop0 mode. If not needed, they must be disabled by software to reduce power consumption.

The ADC and the temperature sensor can consume power during the Stop0 mode, unless they are disabled before entering this mode.

Exiting Stop0 mode

The Stop0 mode is exited according to what indicated in *Section 6.4.4*.

Refer to *Table 30* for details on how to exit Stop0 mode.

When exiting Stop0 mode by issuing an interrupt or a wake-up event, the HSI16 oscillator is selected as system clock if the bit STOPWUCK is set in *RCC clock configuration register (RCC_CFGR)*. The MSI oscillator is selected as system clock if the bit STOPWUCK is cleared. The wake-up time is shorter when HSI16 is selected as wake-up system clock. The MSI selection enables wake-up at higher frequency, up to 48 MHz.

When the voltage regulator operates in low-power mode, an additional startup delay is incurred when waking up from Stop0 mode with HSI16. By keeping the internal regulator ON during Stop0 mode, the consumption is higher but the startup time is reduced.

When exiting Stop0 mode, the MCU is either in Run mode or in Low-power run mode if the bit LPR is set in the same register.

Table 30. Stop0 mode

Stop0 mode	Description
Mode entry	WFI (Wait for Interrupt) or WFE (Wait for Event) while: – SLEEPDEEP bit is set in Cortex System control register – No interrupt (for WFI) or event (for WFE) is pending – LPMS = “000” in PWR_CR1 and/or PWR_C2CR1 or higher
	On Return from ISR while: – SLEEPDEEP bit is set in Cortex System control register – SLEEPONEXIT = 1 – No interrupt is pending – LPMS = “000” in PWR_CR1 and/or PWR_C2CR1 or higher
	Note: To enter Stop0 mode, all EXTI line pending bits (in EXTI pending register (EXTI_PR1), and EXTI pending register (EXTI_PR2)), and the peripheral flags generating wake-up interrupts must be cleared. Otherwise, the Stop0 mode entry procedure is ignored and program execution continues.
Mode exit	If WFI or Return from ISR was used for entry: Any EXTI line configured in Interrupt mode (the corresponding EXTI Interrupt vector must be enabled in the NVIC). The interrupt source can be external interrupts or peripherals with wake-up capability. Refer to *Table 54: CPU1 vector table* and *Table 55: CPU2 vector table*. If WFE was used for entry and SEVONPEND = 0: Any EXTI line configured in event mode. Refer to *Section 13.4: Interrupt list*. If WFE was used for entry and SEVONPEND = 1: Any EXTI line configured in Interrupt mode (even if the corresponding EXTI Interrupt vector is disabled in the NVIC). The interrupt source can be external interrupts or peripherals with wake-up capability. Refer to *Table 54: CPU1 vector table* and *Table 55: CPU2 vector table*. Wakeup event: refer to *Section 13.4: Interrupt list*
Wakeup latency	Longest wake-up time between: MSI or HSI16 wake-up time and flash memory wake-up time from Stop0 mode.

6.4.8 Stop1 mode

The Stop1 mode is the same as Stop0 mode except that the main regulator is OFF, and only the low-power regulator is ON. Stop1 mode can be entered from Run mode and from

Low-power run mode. Before entering the mode, the system clock must be set to HSI16 clock.

Refer to *Table 31* for details on how to enter and exit Stop1 mode.

Table 31. Stop1 mode

Stop1 mode	Description
Mode entry	WFI (Wait for Interrupt) or WFE (Wait for Event) while: – SLEEPDEEP bit is set in Cortex System control register – No interrupt (for WFI) or event (for WFE) is pending – LPMS = “001” in PWR_CR1 and/or PWR_C2CR1 or higher
	On Return from ISR while: – SLEEPDEEP bit is set in Cortex System control register – SLEEPONEXIT = 1 – No interrupt is pending – LPMS = “001” in PWR_CR1 and/or PWR_C2CR1 or higher
	Note: To enter Stop1 mode, all EXTI line pending bits (in EXTI pending register (EXTI_PR1), and EXTI pending register (EXTI_PR2)), and the peripheral flags generating wake-up interrupts must be cleared. Otherwise, the Stop1 mode entry procedure is ignored and program execution continues.
Mode exit	If WFI or Return from ISR was used for entry: Any EXTI line configured in Interrupt mode (the corresponding EXTI Interrupt vector must be enabled in the NVIC). The interrupt source can be external interrupts or peripherals with wake-up capability. Refer to *Table 54: CPU1 vector table* and *Table 55: CPU2 vector table*. If WFE was used for entry and SEVONPEND = 0: Any EXTI line configured in event mode. Refer to *Section 13.4: Interrupt list*. If WFE was used for entry and SEVONPEND = 1: Any EXTI line configured in Interrupt mode (even if the corresponding EXTI Interrupt vector is disabled in the NVIC). The interrupt source can be external interrupts or peripherals with wake-up capability. Refer to *Table 54: CPU1 vector table* and *Table 55: CPU2 vector table*. Wakeup event: refer to *Section 13.4: Interrupt list*.
Wakeup latency	Longest wake-up time between: MSI or HSI16 wake-up time and regulator wake-up time from Low-power mode + flash memory wake-up time from Stop1 mode.

6.4.9 Standby mode

Standby mode makes it possible to achieve the lowest power consumption with BOR. It is based on the CPU deepsleep mode, with the voltage regulators disabled (except when SRAM2 content is preserved). The PLL, the HSI16, the MSI and the HSE oscillators are also switched off.

Register contents are lost except for registers in the Backup domain and Standby circuitry (see *Figure 7*). SRAM1 and SRAM2 content can be preserved if the bit RRS is set in the *PWR control register 3 (PWR_CR3)*. In this case the Low-power regulator is ON and provides the supply to SRAM1 and SRAM2.

The BOR is always available in Standby mode. The consumption is increased when thresholds higher than V_{BOR0} are used.

I/O states in Standby mode

In Standby mode, the I/Os can be configured either with a pull-up (refer to PWR_PUCRx registers (x=A,B,C,D,E,F,G,H)), or with a pull-down (refer to PWR_PDCRx registers (x=A,B,C,D,E,F,G,H)), or can be kept in analog state.

The RTC outputs on PC14 and PC15 used for LSE are functional. Two wake-up pins (WKUPx, x=1,4) and the RTC tamper are available.

Entering Standby mode

Standby mode is entered according to *Section 6.4.3*, when the SLEEPDEEP bit in the Cortex System control register is set.

Refer to *Table 32* for details on how to enter Standby mode.

In Standby mode, the following features can be selected by programming individual control bits:

- Independent watchdog (IWDG): the IWDG is started by writing to its Key register or by hardware option. Once started it cannot be stopped except by a reset. See *Section 25.3: IWDG functional description*.
- Real-time clock (RTC): this is configured by the RTCEN bit in the Backup domain control register (RCC_BDCR).
- Internal RC oscillator (LSI): this is configured by the LSIxON bit in the Control/status register (RCC_CSR).
- External 32.768 kHz oscillator (LSE): this is configured by the LSEON bit in the Backup domain control register (RCC_BDCR)

Exiting Standby mode

Standby mode is exited according to *Section 6.4.4*. The SBF status flag in the *PWR extended status and status clear register (PWR_EXTSCR)* indicates that the MCU was in Standby mode. All registers are reset after wake-up from Standby except for *PWR control register 3 (PWR_CR3)*.

Refer to *Table 32* for more details on how to exit Standby mode.

Table 32. Standby mode

Standby mode	Description
Mode entry	WFI (Wait for Interrupt) or WFE (Wait for Event) while: – SLEEPDEEP bit is set in Cortex System control register – No interrupt (for WFI) or event (for WFE) is pending – LPMS = 011 in PWR_CR1 and/or PWR_C2CR1 or higher – WUFx bits are cleared in power status register 1 (PWR_SR1)
	On return from ISR while: – SLEEPDEEP bit is set in Cortex System control register – SLEEPONEXIT = 1 – No interrupt is pending – LPMS = 011 in PWR_CR1 and/or PWR_C2CR1 or higher – WUFx bits are cleared in power status register 1 (PWR_SR1) The RTC flag corresponding to the chosen wake-up source (RTC Alarm A, RTC Alarm B, RTC wake-up, tamper or timestamp flags) is cleared.
Mode exit	WKUPx pin edge, RTC event, external Reset in NRST pin, IWDG Reset, BOR reset
Wakeup latency	Reset phase

6.4.10 Shutdown mode

The Shutdown mode allows to achieve the lowest power consumption. It is based on the deepsleep mode, with the voltage regulator disabled. The V_{CORE} domain is consequently powered off. The PLL, the HSI16, the MSI, the LSI and the HSE oscillators are also switched off.

SRAM1, SRAM2 and register contents are lost except for registers in the Backup domain. The BOR is not available in Shutdown mode. No power voltage monitoring is possible in this mode, therefore the switch to Backup domain is not supported.

I/O states in Shutdown mode

In the Shutdown mode, the I/Os can be configured either with a pull-up (refer to PWR_PUCRx registers (x=A,B,C,D,E,F,G,H)), or with a pull-down (refer to PWR_PDCRx registers (x=A,B,C,D,E,F,G,H)), or can be kept in analog state.

However this configuration is lost when exiting Shutdown mode due to the power-on reset.

PC14 and PC15 used for LSE are also functional. Two wake-up pins (WKUPx, x=1,4) and the RTC tamper are available.

Entering Shutdown mode

The Shutdown mode is entered according to *Entering Low-power mode*, when the SLEEPDEEP bit in the Cortex System control register is set.

Refer to *Table 33* for details on how to enter Shutdown mode.

In Shutdown mode, the following features can be selected by programming individual control bits:

- Real-time clock (RTC): this is configured by the RTCEN bit in the *RCC backup domain*

control register (RCC_BDCR). Caution: in case of V_{DD} power-down the RTC content is lost.

- External 32.768 kHz oscillator (LSE): this is configured by the LSEON bit in the *RCC backup domain control register (RCC_BDCR)*.

Exiting Shutdown mode

The Shutdown mode is exited according to *Exiting Low-power mode*. A power-on reset occurs when exiting from Shutdown mode. All registers (except for the ones in the Backup domain) are reset after wake-up from Shutdown.

Refer to *Table 33* for more details on how to exit Shutdown mode.

Table 33. Shutdown mode

Shutdown mode	Description
Mode entry	WFI (Wait for Interrupt) or WFE (Wait for Event) while: – SLEEPDEEP bit is set in Cortex System control register – No interrupt (for WFI) or event (for WFE) is pending – LPMS = “1XX” in PWR_CR1 and PWR_C2CR1 – WUFx bits are cleared in power status register 1 (PWR_SR1)
	On return from ISR while: – SLEEPDEEP bit is set in Cortex System control register – SLEEPONEXT = 1 – No interrupt is pending – LPMS = “1XX” in PWR_CR1 and PWR_C2CR1 – WUFx bits are cleared in power status register 1 (PWR_SR1) The RTC flag corresponding to the chosen wake-up source (RTC Alarm A, RTC Alarm B, RTC wake-up, tamper or timestamp flags) is cleared.
Mode exit	WKUPx pin edge, RTC event, external Reset in NRST pin
Wakeup latency	Reset phase

6.4.11 Auto wake-up from Low-power mode

The RTC can be used to wake up the MCU from Low-power mode without depending on an external interrupt (Auto-wake-up mode). The RTC provides a programmable time base for waking up from Stop (0, 1 or 2) or Standby mode at regular intervals. For this purpose, two of the three alternative RTC clock sources can be selected by programming the RTCSEL[1:0] bits in the *RCC backup domain control register (RCC_BDCR)*:

- Low-power 32.768 kHz external crystal oscillator (LSE OSC)
  This clock source provides a precise time base with very low power consumption.
- Low-power internal RC oscillator (LSI)
  This oscillator is designed to add minimum power consumption.

To wake up from Stop mode with an RTC alarm event, it is necessary to:

- Configure the EXTI Line 17 to be sensitive to rising edge
- Configure the RTC to generate the RTC alarm

To wake up from Standby mode, there is no need to configure the EXTI Line 17.

To wake up from Stop mode with an RTC wake-up event, it is necessary to:

- Configure the EXTI Line 19 to be sensitive to rising edge
- Configure the RTC to generate the RTC alarm

To wake up from Standby mode, there is no need to configure the EXTI Line 19.

6.5 Real-time radio information

The PWR provides flags indicating the real time operation on the radio:

- BLE radio activity end interrupt flag
- Critical radio phase flag
- Critical radio phase end interrupt flag

These flags may be used by the CPU1 to determine the radio activity.

The basic timing relation for the different flags is shown in *Figure 12*.

Figure 13. Real-time radio activity flags

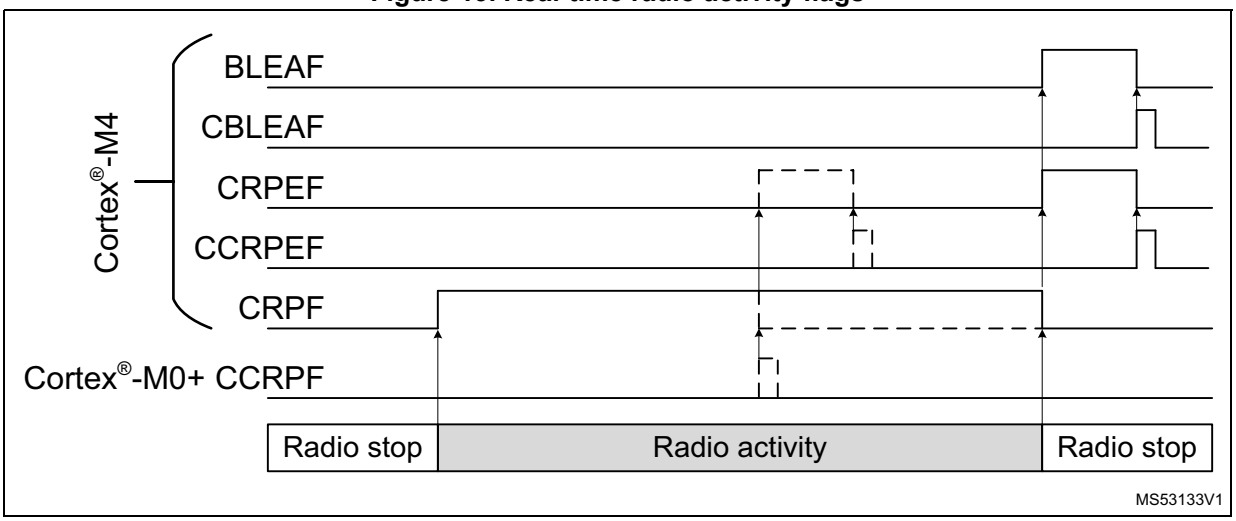

When enabled, the radio activity end interrupt flag BLEAF indicates the end of a BLE radio activity period, and is generated when the radio enters Cstop mode.

The critical radio phase flag indicates the critical real time phase of the radio, where access to the flash memory must not be blocked by erase or program operations (all erase and program operations are suspended by the CPU2 in the flash memory interface). The end of the critical radio phase may be triggered by the CPU2 clearing the critical radio phase flag CRPF, and is eventually cleared at the end of the BLE radio activity.

When enabled, the critical radio phase end interrupt flag CRPEF indicates the end of a radio critical phase, and is generated when the radio critical phase ends.

6.6 PWR registers

The peripheral registers can be accessed by half-words (16-bit) or words (32-bit).

6.6.1 PWR control register 1 (PWR_CR1)

Address offset: 0x000

Reset value: 0x0000 0200. This register is reset after wake-up from Standby mode, except for bits [2:0].

31	30	29	28	27	26	25	24	23	22	21	20	19	18	17	16
Res.	Res.	Res.	Res.	Res.	Res.	Res.	Res.	Res.	Res.	Res.	Res.	Res.	Res.	Res.	Res.

15	14	13	12	11	10	9	8	7	6	5	4	3	2	1	0
Res.	LPR	Res.	Res.	Res.	Res.	Res.	DBP	Res.	Res.	FPDS	FPDR	Res.	LPMS[2:0]		
	rw						rw			rw	rw		rw	rw	rw

Bits 31:15 Reserved, must be kept at reset value.

Bit 14 **LPR**: Low-power run

Note: When this bit is set, the regulator is switched from main mode (MR) to low-power mode (LPR).

Bits 13:9 Reserved, must be kept at reset value.

Bit 8 **DBP**: Disable backup domain write protection

In reset state, the RTC and backup registers are protected against parasitic write access. This bit must be set to enable write access to these registers.

0: Access to RTC and Backup registers disabled

1: Access to RTC and Backup registers enabled

Bits 7:6 Reserved, must be kept at reset value.

Bit 5 **FPDS**: Flash memory power down mode during LPSleep for CPU1

This bit selects whether the flash memory is in power down mode or idle mode when both CPUs are in Sleep mode. flash memory is set in power down mode only when the system is in LPSleep mode and the PWR_C2CR1.FPDS bit from CPU2 also allows this.

0: Flash memory in Idle mode when system is in LPSleep mode

1: Flash memory in power down mode when system is in LPSleep mode

Bit 4 **FPDR**: Flash memory power down mode during LPRun for CPU1

This bit can only be written to 1 after unlocking this register bit, by first writing (code 0xC1B0) into this register (when writing the code, the register bits are not updated). Selects whether the flash memory is in power down mode or idle mode when in LPRun mode. (flash memory can only be in power down mode when code is executed from SRAM). Flash memory is set in power down mode only when the system is in LPRun mode, and the PWR_C2CR1.FPDR bit from CPU2 too allows so.

0: Flash memory in Idle mode when system is in LPRun mode

1: Flash memory in power down mode when system is in LPRun mode

Bit 3 Reserved, must be kept at reset value.

Bits 2:0 **LPMS[2:0]**: Low-power mode selection for CPU1

These bits are not reset when exiting Standby mode.

These bits select the low-power mode allowed when CPU1 enters the deepsleep mode. The entered system low-power mode depends also upon the PWR_C2CR1.LPMS allowed low-power mode from CPU2.

000: Stop0 mode
001: Stop1 mode
010: Reserved
011: Standby mode
1xx: Shutdown mode

Note: In Standby mode, SRAM2 can be preserved or not, depending on RRS bit configuration in PWR_CR3.

6.6.2 PWR control register 2 (PWR_CR2)

Address offset: 0x004

Reset value: 0x0000 0000. This register is reset when exiting Standby mode.

31	30	29	28	27	26	25	24	23	22	21	20	19	18	17	16
Res.	Res.	Res.	Res.	Res.	Res.	Res.	Res.	Res.	Res.	Res.	Res.	Res.	Res.	Res.	Res.

15	14	13	12	11	10	9	8	7	6	5	4	3	2	1	0
Res.	Res.	Res.	Res.	Res.	Res.	Res.	Res.	Res.	PVME3	Res.	Res.	PLS[2:0]			PVDE
									rw			rw	rw	rw	rw

Bits 31:7 Reserved, must be kept at reset value.

Bit 6 **PVME3**: Peripheral voltage monitoring 3 enable: V_{DDA} vs. 1.62 V

0: PVM3 (V_{DDA} monitoring vs. 1.62 V threshold) disabled
1: PVM3 (V_{DDA} monitoring vs. 1.62 V threshold) enabled

Bits 5:4 Reserved, must be kept at reset value.

Bits 3:1 **PLS[2:0]**: Programmable voltage detector level selection.

These bits select the voltage threshold detected by the Programmable voltage detector:

000: V_{PVD0} ~ 2.0 V
001: V_{PVD1} ~ 2.2 V
010: V_{PVD2} ~ 2.4 V
011: V_{PVD3} ~ 2.5 V
100: V_{PVD4} ~ 2.6 V
101: V_{PVD5} ~ 2.8 V
110: V_{PVD6} ~ 2.9 V
111: External input analog voltage PVD_IN (compared internally to V_{DDA}). The I/O used as PVD_IN input must be configured in analog mode in the GPIO register.

Note: These bits are write-protected when the bit PVDL (PVD lock) is set in the SYSCFG_CBR register, they are reset only by a system reset.

Bit 0 **PVDE**: Programmable voltage detector enable

0: Programmable voltage detector disabled
1: Programmable voltage detector enabled

Note: This bit is write-protected when bit PVDL (PVD lock) is set in the SYSCFG_CBR register. This bit is reset only by a system reset.

6.6.3 PWR control register 3 (PWR_CR3)

Address offset: 0x008

Reset value: 0x0000 8000. This register is not reset when exiting Standby modes.

Access: Additional APB cycles are needed to access this register vs. those needed for a standard APB access (three for a write and two for a read).

31	30	29	28	27	26	25	24	23	22	21	20	19	18	17	16
Res.	Res.	Res.	Res.	Res.	Res.	Res.	Res.	Res.	Res.	Res.	Res.	Res.	Res.	Res.	Res.

15	14	13	12	11	10	9	8	7	6	5	4	3	2	1	0
EIWUL	EC2H	Res.	EBLEA	ECRPE	APC	RRS	EBORH SMPSFB	Res.	Res.	Res.	Res.	EWUP4	Res.	Res.	EWUP1
rw	rw		rw	rw	rw	rw	rw					rw			rw

Bits 31:16 Reserved, must be kept at reset value.

Bit 15 **EIWUL**: Enable internal wake-up line for CPU1
0: Internal wake-up line interrupt to CPU1 disabled
1: Internal wake-up line interrupt to CPU1 enabled

Bit 14 **EC2H**: Enable CPU2 Hold interrupt for CPU1
Enable CPU2 kept in hold, due to C2BOOT, interrupt to CPU1.
0: Interrupt to CPU1 disabled
1: interrupt to CPU1 enabled

Bit 13 Reserved, must be kept at reset value.

Bit 12 **EBLEA**: Enable BLE end of activity interrupt for CPU1
0: Interrupt to CPU1 disabled
1: interrupt to CPU1 enabled

Bit 11 **ECRPE**: Enable critical radio phase end of activity interrupt for CPU1
0: Interrupt to CPU1 disabled
1: interrupt to CPU1 enabled

Bit 10 **APC**: Apply pull-up and pull-down configuration from CPU1
When this bit for CPU1 or the PWR_C2CR3.APC bit for CPU2 is set, the I/O pull-up and pull-down configurations defined in the PWR_PUCRx and PWR_PDCRx registers are applied. When both bits are cleared, the PWR_PUCRx and PWR_PDCRx registers are not applied to the I/Os.

Bit 9 **RRS**: SRAM1, SRAM2a and SRAM2b retention in Standby mode
0: SRAM1, SRAM2a and SRAM2b powered off in Standby mode (content is lost).
1: SRAM1, SRAM2a and SRAM2b powered by the low-power regulator in Standby mode (content is kept).

Bit 8 **EBORHSMPSFB**: Enable BORH and SMPS step-down converter forced in Bypass interrupts for CPU1
0: Interrupts BORHF and SMPSFBF to CPU1 disabled
1: interrupts BORHF and SMPSFBF to CPU1 enabled

Bits 7:4 Reserved, must be kept at reset value.

Bit 3 **EWUP4**: Enable wake-up pin WKUP4 for CPU1

When this bit is set, the external wake-up pin WKUP4 is enabled and triggers an interrupt and wake-up from Stop, Standby or Shutdown event when a rising or a falling edge occurs to CPU1. The active edge is configured via the WP4 bit in the *PWR control register 4 (PWR_CR4)*.

Bits 2:1 Reserved, must be kept at reset value.

Bit 0 **EWUP1**: Enable wake-up pin WKUP1 for CPU1

When this bit is set, the external wake-up pin WKUP1 is enabled and triggers an interrupt and wake-up from Stop, Standby or Shutdown event when a rising or a falling edge occurs to CPU1. The active edge is configured via the WP1 bit in the *PWR control register 4 (PWR_CR4)*.

6.6.4 PWR control register 4 (PWR_CR4)

Address offset: 0x00C

Reset value: 0x0000 0000. This register is not reset when exiting Standby modes.

Access: Additional APB cycles are needed to access this register vs. those needed for a standard APB access (three for a write and two for a read).

31	30	29	28	27	26	25	24	23	22	21	20	19	18	17	16
Res.	Res.	Res.	Res.	Res.	Res.	Res.	Res.	Res.	Res.	Res.	Res.	Res.	Res.	Res.	Res.

15	14	13	12	11	10	9	8	7	6	5	4	3	2	1	0
C2BOOT	Res.	Res.	Res.	Res.	Res.	VBRS	VBE	Res.	Res.	Res.	Res.	WP4	Res.	Res.	WP1
rw						rw	rw					rw			rw

Bits 31:16 Reserved, must be kept at reset value.

Bit 15 **C2BOOT**: Boot CPU2 after reset or wake-up from Stop or Standby modes.

0: CPU2 does not boot after reset or wake-up from Stop or Standby modes.

1: CPU2 boots after wake-up from Stop or Standby modes.

Bits 14:10 Reserved, must be kept at reset value.

Bit 9 **VBRS**: V_{BAT} battery charging resistor selection

0: Charge V_{BAT} through a 5 kΩ resistor

1: Charge V_{BAT} through a 1.5 kΩ resistor

Bit 8 **VBE**: V_{BAT} battery charging enable

0: V_{BAT} battery charging disabled

1: V_{BAT} battery charging enabled

Bits 7:4 Reserved, must be kept at reset value.

Bit 3 **WP4**: Wakeup pin WKUP4 polarity

This bit defines the polarity used for an event detection on external wake-up pin, WKUP4

0: Detection on high level (rising edge)

1: Detection on low level (falling edge)

Bits 2:1 Reserved, must be kept at reset value.

Bit 0 **WP1**: Wakeup pin WKUP1 polarity

This bit defines the polarity used for an event detection on external wake-up pin, WKUP1
0: Detection on high level (rising edge)
1: Detection on low level (falling edge)

6.6.5 PWR status register 1 (PWR_SR1)

Address offset: 0x010

Reset value: 0x0000 0000. This register is not reset when exiting Standby modes.

Access: Two additional APB cycles are needed to read this register vs. a standard APB read.

31	30	29	28	27	26	25	24	23	22	21	20	19	18	17	16
Res.	Res.	Res.	Res.	Res.	Res.	Res.	Res.	Res.	Res.	Res.	Res.	Res.	Res.	Res.	Res.
15	**14**	**13**	**12**	**11**	**10**	**9**	**8**	**7**	**6**	**5**	**4**	**3**	**2**	**1**	**0**
WUFI	C2HF	Res.	BLE AF	CRPEF	Res.	BLE WUF	BORHF	SMPS FBF	Res.	Res.	Res.	WUF4	Res.	Res.	WUF1
r	r		r	r		r	r	r				r			r

Bits 31:16 Reserved, must be kept at reset value.

Bit 15 **WUFI**: Internal wake-up interrupt flag

This bit is set when a wake-up is detected on the internal wake-up line. It is cleared when all internal wake-up sources are cleared.

Bit 14 **C2HF**: CPU2 Hold interrupt flag

This bit is set when a CPU2 wake-up is detected when C2BOOT = 0. It is cleared by PWR_SCR.CC2HF.

Bit 13 Reserved, must be kept at reset value.

Bit 12 **BLEAF**: BLE end of activity interrupt flag

This bit is set when a BLE activity ends. It is cleared by PWR_SCR.CBLEAF.

Bit 11 **CRPEF**: Enable critical radio phase end of activity interrupt flag

This bit is set when Radio phase activity ends. It is cleared by PWR_SCR.CCRPEF.

Bit 10 Reserved, must be kept at reset value.

Bit 9 **BLEWUF** BLE wake-up interrupt flag

This bit is set when a wake-up is detected on the BLE line. It is cleared by PWR_SCR.CBLEWUF.

Bit 8 **BORHF**: BORH interrupt flag

This bit is set when the V_{DD} rises above the BORH threshold. It is cleared by PWR_SCR.CBORHF.

Bit 7 **SMPSFBF**: SMPS step-down converter forced in Bypass interrupt flag

This bit is set when the SMPS step-down converter is enabled in SMPS mode and forced in Bypass mode due to the BORH threshold. BORH configuration by BORHC bit in *PWR control register 5 (PWR_CR5)* must select BORH force SMPS step-down converter in Bypass mode.
This bit is cleared by PWR_SCR.CSMPSFBF.

Bits 6:4 Reserved, must be kept at reset value.

Bit 3 **WUF4**: Wakeup flag 4

This bit is set when a wake-up event is detected on wake-up pin,WKUP4. It is cleared by writing ‘1’ in the CWUF4 bit of the *PWR status clear register (PWR_SCR)*.

Bits 2:1 Reserved, must be kept at reset value.

Bit 0 **WUF1**: Wakeup flag 1

This bit is set when a wake-up event is detected on wake-up pin, WKUP1. It is cleared by writing ‘1’ in the CWUF1 bit of the *PWR status clear register (PWR_SCR)*.

6.6.6 PWR status register 2 (PWR_SR2)

Address offset: 0x014

Reset value: 0x0000 0002. This register is partially reset when exiting Standby/Shutdown modes.

31	30	29	28	27	26	25	24	23	22	21	20	19	18	17	16
Res.	Res.	Res.	Res.	Res.	Res.	Res.	Res.	Res.	Res.	Res.	Res.	Res.	Res.	Res.	Res.

15	14	13	12	11	10	9	8	7	6	5	4	3	2	1	0
Res.	PVMO3	Res.	Res.	PVDO	Res.	REGLPF	REGLPS	Res.	Res.	Res.	Res.	Res.	Res.	SMPSF	SMPSBF
	r			r		r	r							r	r

Bits 31:15 Reserved, must be kept at reset value.

Bit 14 **PVMO3**: Peripheral voltage monitoring output: V_{DDA} vs. 1.62 V

0: V_{DDA} voltage is above PVM3 threshold (~ 1.62 V)

1: V_{DDA} voltage is below PVM3 threshold (~ 1.62 V)

Note: PVMO3 is cleared when PVM3 is disabled (PVME3 = 0). After enabling PVM3, the PVM3 output is valid after the PVM3 wake-up time.

Bits 13:12 Reserved, must be kept at reset value.

Bit 11 **PVDO**: Programmable voltage detector output

0: V_{DD} or voltage level on PVD_IN is above the selected PVD threshold

1: V_{DD} or voltage level on PVD_IN is below the selected PVD threshold

Bit 10 Reserved, must be kept at reset value.

Bit 9 **REGLPF**: Low-power regulator flag

This bit is set by hardware when the MCU is in Low-power run mode. When the MCU exits from the Low-power run mode, this bit remains at 1 until the regulator is ready in main mode. A polling on this bit must be done before increasing the product frequency.

This bit is cleared by hardware when the regulator is ready.

0: The regulator is ready in main mode (MR)

1: The regulator is in low-power mode (LPR)

Bit 8 **REGLPS**: Low-power regulator started

This bit provides the information whether the low-power regulator is ready after a power-on reset or a Standby/Shutdown. If the Standby mode is entered while REGLPS bit is still cleared, the wake-up from Standby mode time may be increased.

0: The low-power regulator is not ready

1: The low-power regulator is ready

Bits 7:2 Reserved, must be kept at reset value.

Bit 1 **SMPSF**: SMPS step-down converter SMPS mode flag
This bit indicates that the SMPS step-down converter is in SMPS mode.
0: The SMPS step-down converter is not ready
1: The SMPS step-down converter is ready

Bit 0 **SMPSBF**: SMPS step-down converter Bypass mode flag
This bit indicates that the SMPS step-down converter is in Bypass mode.
0: The SMPS step-down converter is not in Bypass mode (either in Open or SMPS mode)
1: The SMPS step-down converter is in Bypass mode

6.6.7 PWR status clear register (PWR_SCR)

Address offset: 0x018

Reset value: 0x0000 0000

Access: Three additional APB cycles are needed to write this register vs. a standard APB write.

31	30	29	28	27	26	25	24	23	22	21	20	19	18	17	16
Res.	Res.	Res.	Res.	Res.	Res.	Res.	Res.	Res.	Res.	Res.	Res.	Res.	Res.	Res.	Res.
15	14	13	12	11	10	9	8	7	6	5	4	3	2	1	0
Res.	CC2HF	Res.	CFBLEAF	CCRPEF	Res.	CBLEWUF	CBORHF	CSMPSFBF	Res.	Res.	Res.	CWUF4	Res.	Res.	CWUF1
	w		w	w	w	w	w	w				w			w

Bits 31:15 Reserved, must be kept at reset value.

Bit 14 **CC2HF**: Clear CPU2 Hold interrupt flag
Setting this bit clears the C2HF flag in the PWR_SR1. This bit is always read 0.

Bit 13 Reserved, must be kept at reset value.

Bit 12 **CBLEAF**: Clear BLE end of activity interrupt flag
Setting this bit clears the BLEAF flag in the PWR_SR1. This bit is always read 0.

Bit 11 **CCRPEF**: Clear critical radio phase end of activity interrupt flag
Setting this bit clears the CRPEF flag in the PWR_SR1. This bit is always read 0.

Bit 10 Reserved, must be kept at reset value.

Bit 9 **CBLEWUF** Clear BLE wake-up interrupt flag
Setting this bit clears the BLEWUF flag in the PWR_SR1. This bit is always read 0.

Bit 8 **CBORHF**: Clear BORH interrupt flag
Setting this bit clears the SBORHF flag in the PWR_SR1. This bit is always read 0.

Bit 7 **CSMPSFBF**: Clear SMPS step-down converter forced in Bypass interrupt flag
Setting this bit clears the SMPSFBF flag in the PWR_SR1. This bit is always read 0.

Bits 6:4 Reserved, must be kept at reset value.

Bit 3 **CWUF4**: Clear wake-up flag 4
Setting this bit clears the WUF4 flag in the PWR_SR1 register.

Bits 2:1 Reserved, must be kept at reset value.

Bit 0 **CWUF1**: Clear wake-up flag 1
Setting this bit clears the WUF1 flag in the PWR_SR1 register.

6.6.8 PWR control register 5 (PWR_CR5)

Address offset: 0x01C

Reset value: 0x0000 427X, where X is factory-programmed. This register is not reset when exiting Standby modes.

Access: Three additional APB cycles are needed to write this register vs. a standard APB write.

31	30	29	28	27	26	25	24	23	22	21	20	19	18	17	16
Res.	Res.	Res.	Res.	Res.	Res.	Res.	Res.	Res.	Res.	Res.	Res.	Res.	Res.	Res.	Res.

15	14	13	12	11	10	9	8	7	6	5	4	3	2	1	0
SMPSEN	Res.	Res.	Res.	Res.	Res.	Res.	BORHC	Res.	.SMPSSC[2:0]			SMPSVOS[3:0]			
rw							rw		rw	rw	rw	rw	rw	rw	rw

Bits 31:16 Reserved, must be kept at reset value.

Bit 15 **SMPSEN**: Enable SMPS step-down converter SMPS mode enabled.
This bit is reset to 0 when SMPS step-down converter switching on the fly is enabled and the V_{DD} level drops below the BORH threshold.
0: SMPS Step down converter SMPS mode disabled.
1: SMPS Step down converter SMPS mode enabled.

Note: The noise performance of analog signals may be impacted by the integrated SMPS switching. To prevent this the SMPS may be switched off on the fly when measuring analog signals.

Bits 14:9 Reserved, must be kept at reset value.

Bit 8 **BORHC**: BORH configuration selection
0: BORH generates a system reset.
1: BORH forces SMPS step-down converter Bypass mode (BORL still generates a system reset).

Bit 7 Reserved, must be kept at reset value.

Bits 6:4 **SMPSSC**: SMPS step-down converter supply startup current selection
Startup current is limited to maximum 80 mA + SMPSSC x 20 mA.

Bit 3:0 **SMPSVOS**: SMPS step-down converter voltage output scaling
These bits are initialized after Option byte loading with factory trimmed value to reach 1.5 V, and can subsequently be overwritten by firmware.
SMPS step down output voltage step size is 50 mV.
If factory trimmed value - 0x8 gives 1.50 V on $V_{FBSMSPS}$, to get 1.40 V 0x2 must be subtracted from this value.
- 0x0 = minimum voltage level
- 0xF = maximum voltage level

The factory trimmed value can be obtained from address 0x1FFF 7558 bits [11:8].

6.6.9 PWR Port A pull-up control register (PWR_PUCRA)

Address offset: 0x020

Reset value: 0x0000 0000. This register is not reset when exiting Standby modes.

Access: Additional APB cycles are needed to access this register vs. those needed for a standard APB access (three for a write and two for a read).

31	30	29	28	27	26	25	24	23	22	21	20	19	18	17	16
Res.	Res.	Res.	Res.	Res.	Res.	Res.	Res.	Res.	Res.	Res.	Res.	Res.	Res.	Res.	Res.
15	14	13	12	11	10	9	8	7	6	5	4	3	2	1	0
PU15	PU14	PU13	PU12	PU11	PU10	PU9	PU8	PU7	PU6	PU5	PU4	PU3	PU2	PU1	PU0
rw	rw	rw	rw	rw	rw	rw	rw	rw	rw	rw	rw	rw	rw	rw	rw

Bits 31:16 Reserved, must be kept at reset value.

Bits 15:0 **PUy**: Port A pull-up bit y (y=0...15)

When set, this bit activates the pull-up on Px[y] when one of the APC bits is set in *PWR control register 3 (PWR_CR3)* and in *PWR CPU2 control register 3 (PWR_C2CR3)*. The pull-up is not activated if the corresponding PDy bit is also set.

6.6.10 PWR Port A pull-down control register (PWR_PDCRA)

Address offset: 0x024

Reset value: 0x0000 0000. This register is not reset when exiting Standby modes.

Access: Additional APB cycles are needed to access this register vs. those needed for a standard APB access (three for a write and two for a read).

31	30	29	28	27	26	25	24	23	22	21	20	19	18	17	16
Res.	Res.	Res.	Res.	Res.	Res.	Res.	Res.	Res.	Res.	Res.	Res.	Res.	Res.	Res.	Res.
15	14	13	12	11	10	9	8	7	6	5	4	3	2	1	0
PD15	PD14	PD13	PD12	PD11	PD10	PD9	PD8	PD7	PD6	PD5	PD4	PD3	PD2	PD1	PD0
rw	rw	rw	rw	rw	rw	rw	rw	rw	rw	rw	rw	rw	rw	rw	rw

Bits 31:16 Reserved, must be kept at reset value.

Bits 15:0 **PDy**: Port A pull-down bit y (y=0...15)

When set, this bit activates the pull-down on PA[y] when one of the APC bits is set in *PWR control register 3 (PWR_CR3)* and in *PWR CPU2 control register 3 (PWR_C2CR3)*.

6.6.11 PWR Port B pull-up control register (PWR_PUCRB)

Address offset: 0x028

Reset value: 0x0000 0000. This register is not reset when exiting Standby modes.

Access: Additional APB cycles are needed to access this register vs. those needed for a standard APB access (three for a write and two for a read).

31	30	29	28	27	26	25	24	23	22	21	20	19	18	17	16
Res.	Res.	Res.	Res.	Res.	Res.	Res.	Res.	Res.	Res.	Res.	Res.	Res.	Res.	Res.	Res.
15	14	13	12	11	10	9	8	7	6	5	4	3	2	1	0
Res.	Res.	Res.	Res.	PU11	Res.	PU9	PU8	PU7	PU6	PU5	PU4	PU3	PU2	PU1	PU0
				rw		rw	rw	rw	rw	rw	rw	rw	rw	rw	rw

Bits 31:12 Reserved, must be kept at reset value.

Bit 11 **PU11**: Port B pull-up bit 11

When set, this bit activates the pull-up on Px[11] when one of the APC bits is set in *PWR control register 3 (PWR_CR3)* and in *PWR CPU2 control register 3 (PWR_C2CR3)*. The pull-up is not activated if the corresponding PD11 bit is also set.

Bit 10 Reserved, must be kept at reset value.

Bits 9:0 **PUy**: Port B pull-up bit y (y=0...9)

When set, this bit activates the pull-up on Px[y] when one of the APC bits is set in *PWR control register 3 (PWR_CR3)* and in *PWR CPU2 control register 3 (PWR_C2CR3)*. The pull-up is not activated if the corresponding PDy bit is also set.

6.6.12 PWR Port B pull-down control register (PWR_PDCRB)

Address offset: 0x02C

Reset value: 0x0000 0000. This register is not reset when exiting Standby modes.

Access: Additional APB cycles are needed to access this register vs. those needed for a standard APB access (three for a write and two for a read).

31	30	29	28	27	26	25	24	23	22	21	20	19	18	17	16
Res.	Res.	Res.	Res.	Res.	Res.	Res.	Res.	Res.	Res.	Res.	Res.	Res.	Res.	Res.	Res.
15	14	13	12	11	10	9	8	7	6	5	4	3	2	1	0
Res.	Res.	Res.	Res.	PD11	Res.	PD9	PD8	PD7	PD6	PD5	PD4	PD3	PD2	PD1	PD0
				rw		rw	rw	rw	rw	rw	rw	rw	rw	rw	rw

Bits 31:12 Reserved, must be kept at reset value.

Bit 11 **PD11**: Port B pull-down bit 11

When set, this bit activates the pull-down on PB11 when one of the APC bits is set in *PWR control register 3 (PWR_CR3)* and in *PWR CPU2 control register 3 (PWR_C2CR3)*.

Bit 10 Reserved, must be kept at reset value.

Bits 9:0 **PDy**: Port B pull-down bit y (y=0...9)

When set, this bit activates the pull-down on PB[y] when one of the APC bits is set in *PWR control register 3 (PWR_CR3)* and in *PWR CPU2 control register 3 (PWR_C2CR3)*.

6.6.13 PWR Port C pull-up control register (PWR_PUCRC)

Address offset: 0x030

Reset value: 0x0000 0000. This register is not reset when exiting Standby modes.

Access: Additional APB cycles are needed to access this register vs. those needed for a standard APB access (three for a write and two for a read).

31	30	29	28	27	26	25	24	23	22	21	20	19	18	17	16
Res.	Res.	Res.	Res.	Res.	Res.	Res.	Res.	Res.	Res.	Res.	Res.	Res.	Res.	Res.	Res.
15	14	13	12	11	10	9	8	7	6	5	4	3	2	1	0
PU15	PU14	Res.	Res.	Res.	Res.	Res.	Res.	Res.	Res.	Res.	Res.	Res.	Res.	Res.	Res.
rw	rw														

Bits 31:16 Reserved, must be kept at reset value.

Bits 15:14 **PUy**: Port C pull-up bit y (y=14,15)

When set, this bit activates the pull-up on Px[y] when one of the APC bits is set in *PWR control register 3 (PWR_CR3)* and in *PWR CPU2 control register 3 (PWR_C2CR3)*. The pull-up is not activated if the corresponding PDy bit is also set.

Bits 13:0 Reserved, must be kept at reset value.

6.6.14 PWR Port C pull-down control register (PWR_PDCRC)

Address offset: 0x034

Reset value: 0x0000 0000. This register is not reset when exiting Standby modes.

Access: Additional APB cycles are needed to access this register vs. those needed for a standard APB access (three for a write and two for a read).

31	30	29	28	27	26	25	24	23	22	21	20	19	18	17	16
Res.	Res.	Res.	Res.	Res.	Res.	Res.	Res.	Res.	Res.	Res.	Res.	Res.	Res.	Res.	Res.
15	14	13	12	11	10	9	8	7	6	5	4	3	2	1	0
PD15	PD14	Res.	Res.	Res.	Res.	Res.	Res.	Res.	Res.	Res.	Res.	Res.	Res.	Res.	Res.
rw	rw														

Bits 31:16 Reserved, must be kept at reset value.

Bits 15:14 **PDy**: Port C pull-down bit y (y=14,15)

When set, this bit activates the pull-down on PC[y] when one of the APC bits is set in *PWR control register 3 (PWR_CR3)* and in *PWR CPU2 control register 3 (PWR_C2CR3)*.

Bits 13:0 Reserved, must be kept at reset value.

6.6.15 PWR Port E pull-up control register (PWR_PUCRE)

Address offset: 0x040

Reset value: 0x0000 0000. This register is not reset when exiting Standby modes.

Access: Additional APB cycles are needed to access this register vs. those needed for a standard APB access (three for a write and two for a read).

31	30	29	28	27	26	25	24	23	22	21	20	19	18	17	16
Res.	Res.	Res.	Res.	Res.	Res.	Res.	Res.	Res.	Res.	Res.	Res.	Res.	Res.	Res.	Res.

15	14	13	12	11	10	9	8	7	6	5	4	3	2	1	0
Res.	Res.	Res.	Res.	Res.	Res.	Res.	Res.	Res.	Res.	Res.	PU4	Res.	Res.	Res.	Res.
											rw				

Bits 31:5 Reserved, must be kept at reset value.

Bit 4 **PU4**: Port E pull-up bit 4

When set, this bit activates the pull-up on Px[y] when one of the APC bits is set in *PWR control register 3 (PWR_CR3)* and in *PWR CPU2 control register 3 (PWR_C2CR3)*. The pull-up is not activated if the corresponding PD4 bit is also set.

Bits 3:0 Reserved, must be kept at reset value.

6.6.16 PWR Port E pull-down control register (PWR_PDCRE)

Address offset: 0x044

Reset value: 0x0000 0000. This register is not reset when exiting Standby modes.

Access: Additional APB cycles are needed to access this register vs. those needed for a standard APB access (three for a write and two for a read).

31	30	29	28	27	26	25	24	23	22	21	20	19	18	17	16
Res.	Res.	Res.	Res.	Res.	Res.	Res.	Res.	Res.	Res.	Res.	Res.	Res.	Res.	Res.	Res.

15	14	13	12	11	10	9	8	7	6	5	4	3	2	1	0
Res.	Res.	Res.	Res.	Res.	Res.	Res.	Res.	Res.	Res.	Res.	PD4	Res.	Res.	Res.	Res.
											rw				

Bits 31:5 Reserved, must be kept at reset value.

Bit 4 **PD4**: Port E pull-down bit 4

When set, this bit activates the pull-down on PE4 when one of the APC bits is set in *PWR control register 3 (PWR_CR3)* and in *PWR CPU2 control register 3 (PWR_C2CR3)*.

Bits 3:0 Reserved, must be kept at reset value.

6.6.17 PWR Port H pull-up control register (PWR_PUCRH)

Address offset: 0x058

Reset value: 0x0000 0000. This register is not reset when exiting Standby modes and with PWRRST bit in the RCC_APB1RSTR1 register.

Access: Additional APB cycles are needed to access this register vs. those needed for a standard APB access (three for a write and two for a read).

31	30	29	28	27	26	25	24	23	22	21	20	19	18	17	16
Res.	Res.	Res.	Res.	Res.	Res.	Res.	Res.	Res.	Res.	Res.	Res.	Res.	Res.	Res.	Res.

15	14	13	12	11	10	9	8	7	6	5	4	3	2	1	0
Res.	Res.	Res.	Res.	Res.	Res.	Res.	Res.	Res.	Res.	Res.	Res.	PU3	Res.	Res.	Res.
												rw			

Bits 31:4 Reserved, must be kept at reset value.

Bit 3 **PU3:** Port H pull-up bit 3

When set, this bit activates the pull-up on PH[y] when one of the APC bits is set in *PWR control register 3 (PWR_CR3)* and in *PWR CPU2 control register 3 (PWR_C2CR3)*. The pull-up is not activated if the corresponding PDy bit is also set.

Bits 2:0 Reserved, must be kept at reset value.

6.6.18 PWR Port H pull-down control register (PWR_PDCRH)

Address offset: 0x05C

Reset value: 0x0000 0000. This register is not reset when exiting Standby modes and with PWRRST bit in the RCC_APB1RSTR1 register.

Access: Additional APB cycles are needed to access this register vs. those needed for a standard APB access (three for a write and two for a read).

31	30	29	28	27	26	25	24	23	22	21	20	19	18	17	16
Res.	Res.	Res.	Res.	Res.	Res.	Res.	Res.	Res.	Res.	Res.	Res.	Res.	Res.	Res.	Res.

15	14	13	12	11	10	9	8	7	6	5	4	3	2	1	0
Res.	Res.	Res.	Res.	Res.	Res.	Res.	Res.	Res.	Res.	Res.	Res.	PD3	Res.	Res.	Res.
												rw			

Bits 31:4 Reserved, must be kept at reset value.

Bit 3 **PD3:** Port H pull-down bit 3

When set, this bit activates the pull-down on PH[y] when one of the APC bits is set in *PWR control register 3 (PWR_CR3)* and in *PWR CPU2 control register 3 (PWR_C2CR3)*.

Bits 2:0 Reserved, must be kept at reset value.

6.6.19 PWR CPU2 control register 1 (PWR_C2CR1)

Address offset: 0x080

Reset value: 0x0000 0000. This register is reset after wake-up from Standby mode, except for bits [2:0].

31	30	29	28	27	26	25	24	23	22	21	20	19	18	17	16
Res.	Res.	Res.	Res.	Res.	Res.	Res.	Res.	Res.	Res.	Res.	Res.	Res.	Res.	Res.	Res.

15	14	13	12	11	10	9	8	7	6	5	4	3	2	1	0
Res.	BLE EWKUP	Res.	Res.	Res.	Res.	Res.	Res.	Res.	Res.	FPDS	FPDR	Res.	LPMS[2:0]		
	rw									rw	rw		rw	rw	rw

Bits 31:15 Reserved, must be kept at reset value.

Bit 14 **BLEEWKUP**: BLE external wake-up

When set this bit forces a wake-up of the BLE controller. It is automatically reset when BLE controller exits its sleep mode.

0: No action

1: Wakeup BLE controller from its sleep mode

Bits 13:6 Reserved, must be kept at reset value.

Bit 5 **FPDS**: Flash memory power down mode during LPSleep for CPU2

This bit selects whether the flash memory is in power down mode or idle mode when both CPUs are in Sleep mode. flash memory is set in power down mode only when the system is in LPSleep mode and the PWR_CR1.FPDS bit from CPU1 also allows so.

0: Flash memory in Idle mode when system is in LPSleep mode

1: Flash memory in power down mode when system is in LPSleep mode

Bit 4 **FPDR**: Flash memory power down mode during LPRun for CPU2

This bit can only be written to 1 after unlocking this register bit, by first writing (code 0xC1B0) into this register (when writing the code register bits are not updated). Selects whether the flash memory is in power down mode or idle mode when in LPRun mode. (flash memory can only be in power down mode when code is executed from SRAM). Flash memory is set in power down mode only when the system is in LPRun mode, and the PWR_CR1.FPDR bit from CPU1 also allows so.

0: Flash memory in Idle mode when system is in LPRun mode

1: Flash memory in power down mode when system is in LPRun mode

Bit 3 Reserved, must be kept at reset value.

Bits 2:0 **LPMS[2:0]**: Low-power mode selection for CPU2

These bits are not reset when exiting Standby mode.

These bits select the low-power mode entered when CPU2 enters the deepsleep mode. The system low-power mode entered depend also on the PWR_CR1.LPMS allowed low-power mode from CPU1.

000: Stop0 mode

001: Stop1 mode

010: Reserved

011: Standby mode

1xx: Shutdown mode

Note: In Standby mode, SRAM2 can be preserved or not, depending on RRS bit configuration in PWR control register 3 (PWR_CR3).

6.6.20 PWR CPU2 control register 3 (PWR_C2CR3)

Address offset: 0x084

Reset value: 0x0000 8000. This register is not reset when exiting Standby modes.

Access: Additional APB cycles are needed to access this register vs. those needed for a standard APB access (three for a write and two for a read).

31	30	29	28	27	26	25	24	23	22	21	20	19	18	17	16
Res.	Res.	Res.	Res.	Res.	Res.	Res.	Res.	Res.	Res.	Res.	Res.	Res.	Res.	Res.	Res.

15	14	13	12	11	10	9	8	7	6	5	4	3	2	1	0
EI WUL	Res.	Res.	APC	Res.	Res.	EBLE WUP	Res.	Res.	Res.	Res.	Res.	EWUP4	Res.	Res.	EWUP1
rw			rw			rw						rw			rw

Bits 31:16 Reserved, must be kept at reset value.

Bit 15 **EIWUL**: Enable internal wake-up line for CPU2

0: Internal wake-up line to CPU2 disabled

1: Internal wake-up line to CPU2 enabled

Bits 14:13 Reserved, must be kept at reset value.

Bit 12 **APC**: Apply pull-up and pull-down configuration for CPU2

When this bit for CPU2 or the PWR_CR3.APC bit for CPU1 is set, the I/O pull-up and pull-down configurations defined in the PWR_PUCRx and PWR_PDCRx registers are applied. When both bits are cleared, the PWR_PUCRx and PWR_PDCRx registers are not applied to the I/Os.

Bits 11:10 Reserved, must be kept at reset value.

Bit 9 **EBLEWUP** Enable BLE host wake-up interrupt for CPU2

0: Interrupt to CPU2 disabled

1: interrupt to CPU2 enabled

Bits 8:4 Reserved, must be kept at reset value.

Bit 3 **EWUP4**: Enable wake-up pin WKUP4 for CPU2

When this bit is set, the external wake-up pin WKUP4 is enabled and triggers an interrupt and wake-up from Stop, Standby or Shutdown event when a rising or a falling edge occurs to CPU2. The active edge is configured via the WP4 bit in the *PWR control register 4 (PWR_CR4)*.

Bits 2:1 Reserved, must be kept at reset value.

Bit 0 **EWUP1**: Enable wake-up pin WKUP1 for CPU2

When this bit is set, the external wake-up pin WKUP1 is enabled and triggers an interrupt and wake-up from Stop, Standby or Shutdown event when a rising or a falling edge occurs to CPU2. The active edge is configured via the WP1 bit in the *PWR control register 4 (PWR_CR4)*.

6.6.21 PWR extended status and status clear register (PWR_EXTSCR)

Address offset: 0x088

Reset value: 0x0000 0000

Access: Three additional APB cycles are needed to write this register vs. a standard APB write.

31	30	29	28	27	26	25	24	23	22	21	20	19	18	17	16
Res.	Res.	Res.	Res.	Res.	Res.	Res.	Res.	Res.	Res.	Res.	Res.	Res.	Res.	Res.	Res.
15	14	13	12	11	10	9	8	7	6	5	4	3	2	1	0
C2DS	C1DS	CRPF	Res.	C2STOPF	C2SBF	C1STOPF	C1SBF	Res.	Res.	Res.	Res.	Res.	CCRPF	C2CSSF	C1CSSF
r	r	r		r	r	r	r						w	w	w

Bits 31:16 Reserved, must be kept at reset value.

Bit 15 **C2DS**: CPU2 deepsleep mode
This bit is set by hardware when CPU2 enters deepsleep mode or is hold by C2BOOT.
0: CPU2 is running or in sleep
1: CPU2 is in deepsleep or hold by C2BOOT

Bit 14 **C1DS**: CPU1 deepsleep mode
This bit is set by hardware when CPU1 enters deepsleep mode.
0: CPU1 is running or in sleep
1: CPU1 is in deepsleep

Bit 13 **CRPF**: Critical Radio system phase
This bit is set by hardware when the Radio system wakes up. It is reset either by hardware when the Radio system enters Low-power mode or by software when writing CCRPF.
0: Not a critical Radio system phase
1: Critical Radio system phase ongoing

Bit 12 Reserved, must be kept at reset value.

Bit 11 **C2STOPF**: System Stop flag for CPU2.
This bit is set by hardware and cleared only by any reset or by setting C2CSSF bit.
0: System has not been in Stop mode
1: System has been in Stop mode

Bit 10 **C2SBF**: System Standby flag for CPU2.
This bit is set by hardware and cleared only by a POR reset or by setting C2CSSF bit.
0: System has not been in Standby mode
1: System has been in Standby mode

Bit 9 **C1STOPF**: System Stop flag for CPU1.
This bit is set by hardware and cleared only by any reset or by setting C1CSSF bit.
0: System has not been in Stop mode
1: System has been in Stop mode

Bit 8 **C1SBF**: System Standby flag for CPU1.
This bit is set by hardware and cleared only by a POR reset or by setting C1CSSF bit.
0: System has not been in Standby mode
1: System has been in Standby mode

Bits 7:3 Reserved, must be kept at reset value.

Bit 2 **CCRPF**: Clear critical Radio system phase
Setting this bit clears the CRPF bit.

Bit 1 **C2CSSF**: Clear CPU2 Stop Standby flags
Setting this bit clears the C2STOPF and C2SBF bits.

Bit 0 **C1CSSF**: Clear CPU1 Stop Standby flags
Setting this bit clears the C1STOPF and C1SBF bits.

6.6.22 PWR register map and reset value table

Table 34. PWR register map and reset values

Offset	Register	31	30	29	28	27	26	25	24	23	22	21	20	19	18	17	16	15	14	13	12	11	10	9	8	7	6	5	4	3	2	1	0
0x000	PWR_CR1	Res.	Res.	Res.	Res.	Res.	Res.	Res.	Res.	Res.	Res.	Res.	Res.	Res.	Res.	Res.	Res.	Res.	LPR	Res.	Res.	Res.	Res.	Res.	DBP	Res.	Res.	FPDS	FPDR	Res.	LPMS [2:0]		
	Reset value																		0						0			0	0		0	0	0
0x004	PWR_CR2	Res.	Res.	Res.	Res.	Res.	Res.	Res.	Res.	Res.	Res.	Res.	Res.	Res.	Res.	Res.	Res.	Res.	Res.	Res.	Res.	Res.	Res.	Res.	Res.	Res.	PVME3	Res.	Res.	PLS [2:0]			PVDE
	Reset value																										0			0	0	0	0
0x008	PWR_CR3	Res.	Res.	Res.	Res.	Res.	Res.	Res.	Res.	Res.	Res.	Res.	Res.	Res.	Res.	Res.	Res.	EIWUL	EC2H	Res.	EBLEA	ECRPE	APC	RRS	EBORHSMPSFB	Res.	Res.	Res.	Res.	EWUP4	Res.	Res.	EWUP1
	Reset value																	1	0		0	0	0	0	0					0			0
0x00C	PWR_CR4	Res.	Res.	Res.	Res.	Res.	Res.	Res.	Res.	Res.	Res.	Res.	Res.	Res.	Res.	Res.	Res.	C2BOOT	Res.	Res.	Res.	Res.	Res.	VBRS	VBE	Res.	Res.	Res.	Res.	WP4	Res.	Res.	WP1
	Reset value																	0						0	0					0			0
0x010	PWR_SR1	Res.	Res.	Res.	Res.	Res.	Res.	Res.	Res.	Res.	Res.	Res.	Res.	Res.	Res.	Res.	Res.	WUFI	C2HF	Res.	BLEAF	CRPEF	Res.	BLEWUF	BORHF	SMPSFBF	Res.	Res.	Res.	WUF4	Res.	Res.	WUF1
	Reset value																	0	0		0	0		0	0	0				0			0
0x014	PWR_SR2	Res.	Res.	Res.	Res.	Res.	Res.	Res.	Res.	Res.	Res.	Res.	Res.	Res.	Res.	Res.	Res.	Res.	PVMO3	Res.	Res.	PVDO	VOSF	REGLPF	REGLPS	Res.	Res.	Res.	Res.	Res.	Res.	SMPSF	SMPSBF
	Reset value																		0			0	0	0	0							0	0
0x018	PWR_SCR	Res.	Res.	Res.	Res.	Res.	Res.	Res.	Res.	Res.	Res.	Res.	Res.	Res.	Res.	Res.	Res.	Res.	CC2HF	Res.	CBLEAF	CCRPEF	Res.	CBLEWUF	CBORHF	CSMPSFBF	Res.	Res.	Res.	CWUF4	Res.	Res.	CWUF1
	Reset value																		0		0	0		0	0	0				0			0
0x01C	PWR_CR5	Res.	Res.	Res.	Res.	Res.	Res.	Res.	Res.	Res.	Res.	Res.	Res.	Res.	Res.	Res.	Res.	SMPSEN	Res.	Res.	Res.	Res.	Res.	Res.	BORHC	Res.	SMPS SC[2:0]			SMPS VOS[3:0]			
	Reset value																	0							0		1	1	1	x	x	x	x
0x020	PWR_PUCRA	Res.	Res.	Res.	Res.	Res.	Res.	Res.	Res.	Res.	Res.	Res.	Res.	Res.	Res.	Res.	Res.	PU15	PU14	PU13	PU12	PU11	PU10	PU9	PU8	PU7	PU6	PU5	PU4	PU3	PU2	PU1	PU0
	Reset value																	0	0	0	0	0	0	0	0	0	0	0	0	0	0	0	0
0x024	PWR_PDCRA	Res.	Res.	Res.	Res.	Res.	Res.	Res.	Res.	Res.	Res.	Res.	Res.	Res.	Res.	Res.	Res.	PD15	PD14	PD13	PD12	PD11	PD10	PD9	PD8	PD7	PD6	PD5	PD4	PD3	PD2	PD1	PD0
	Reset value																	0	0	0	0	0	0	0	0	0	0	0	0	0	0	0	0
0x028	PWR_PUCRB	Res.	Res.	Res.	Res.	Res.	Res.	Res.	Res.	Res.	Res.	Res.	Res.	Res.	Res.	Res.	Res.	Res.	Res.	Res.	Res.	PU11	Res.	PU9	PU8	PU7	PU6	PU5	PU4	PU3	PU2	PU1	PU0
	Reset value																					0		0	0	0	0	0	0	0	0	0	0
0x02C	PWR_PDCRB	Res.	Res.	Res.	Res.	Res.	Res.	Res.	Res.	Res.	Res.	Res.	Res.	Res.	Res.	Res.	Res.	Res.	Res.	Res.	Res.	PD11	Res.	PD9	PD8	PD7	PD6	PD5	PD4	PD3	PD2	PD1	PD0
	Reset value																					0		0	0	0	0	0	0	0	0	0	0
0x030	PWR_PUCRC	Res.	Res.	Res.	Res.	Res.	Res.	Res.	Res.	Res.	Res.	Res.	Res.	Res.	Res.	Res.	Res.	PU15	PU14	Res.	Res.	Res.	Res.	Res.	Res.	Res.	Res.	Res.	Res.	Res.	Res.	Res.	Res.
	Reset value																	0	0														

Table 34. PWR register map and reset values (continued)

Offset	Register	31	30	29	28	27	26	25	24	23	22	21	20	19	18	17	16	15	14	13	12	11	10	9	8	7	6	5	4	3	2	1	0
0x034	PWR_PDCRC	Res.	Res.	Res.	Res.	Res.	Res.	Res.	Res.	Res.	Res.	Res.	Res.	Res.	Res.	Res.	Res.	PD15	PD14	Res.	Res.	Res.	Res.	Res.	Res.	Res.	Res.	Res.	Res.	Res.	Res.	Res.	Res.
	Reset value																	0	0														
0x038	Reserved																																
0x03C	Reserved																																
0x040	PWR_PUCRE	Res.	Res.	Res.	Res.	Res.	Res.	Res.	Res.	Res.	Res.	Res.	Res.	Res.	Res.	Res.	Res.	Res.	Res.	Res.	Res.	Res.	Res.	Res.	Res.	Res.	Res.	Res.	PU4	Res.	Res.	Res.	Res.
	Reset value																												0				
0x044	PWR_PDCRE	Res.	Res.	Res.	Res.	Res.	Res.	Res.	Res.	Res.	Res.	Res.	Res.	Res.	Res.	Res.	Res.	Res.	Res.	Res.	Res.	Res.	Res.	Res.	Res.	Res.	Res.	Res.	PD4	Res.	Res.	Res.	Res.
	Reset value																												0				
0x058	PWR_PUCRH	Res.	Res.	Res.	Res.	Res.	Res.	Res.	Res.	Res.	Res.	Res.	Res.	Res.	Res.	Res.	Res.	Res.	Res.	Res.	Res.	Res.	Res.	Res.	Res.	Res.	Res.	Res.	Res.	PU3	Res.	Res.	Res.
	Reset value																													0			
0x05C	PWR_PDCRH	Res.	Res.	Res.	Res.	Res.	Res.	Res.	Res.	Res.	Res.	Res.	Res.	Res.	Res.	Res.	Res.	Res.	Res.	Res.	Res.	Res.	Res.	Res.	Res.	Res.	Res.	Res.	Res.	PD3	Res.	Res.	Res.
	Reset value																													0			
0x080	PWR_C2CR1	Res.	Res.	Res.	Res.	Res.	Res.	Res.	Res.	Res.	Res.	Res.	Res.	Res.	Res.	Res.	Res.	Res.	BLEEWKUP	Res.	Res.	Res.	Res.	Res.	Res.	Res.	Res.	FPDS	FPDR	Res.	LPMS [2:0]		
	Reset value																		0									0	0		0	0	0
0x084	PWR_C2CR3	Res.	Res.	Res.	Res.	Res.	Res.	Res.	Res.	Res.	Res.	Res.	Res.	Res.	Res.	Res.	Res.	EIWUL	Res.	Res.	APC	Res.	Res.	EBLEWUP	Res.	Res.	Res.	Res.	Res.	EWUP4	Res.	Res.	EWUP1
	Reset value																	1			0			0						0			0
0x088	PWR_EXTSCR	Res.	Res.	Res.	Res.	Res.	Res.	Res.	Res.	Res.	Res.	Res.	Res.	Res.	Res.	Res.	Res.	C2DS	C1DS	CRPF	Res.	C2STOPF	C2SBF	C1STOPF	C1SBF	Res.	Res.	Res.	Res.	Res.	CCRPF	C2CSSF	C1CSSF
	Reset value																	0	0	0		0	0	0	0						0	0	0

Refer to *Section 2.2 on page 55* for the register boundary addresses.

7 Peripherals interconnect matrix

7.1 Introduction

Several peripherals have direct connections, enabling autonomous communication and/or synchronization between them. This saves CPU resources and, consequently, reduces power consumption. In addition, these hardware connections remove software latency and result in more predictable system design.

Depending on peripherals, these interconnections can operate in Run, Sleep, Low-power run and sleep, Stop 0 and Stop 1 modes.

7.2 Connection summary

Table 35. STM32WB15CC peripherals interconnect matrix(1) (2)

Source	Destination					
	TIM1	TIM2	LPTIM1	LPTIM2	ADC1	COMP1
TIM1	-	1	-	-	2	6
TIM2	1	-	-	-	2	6
LPTIM1	-	-	-	-	-	-
LPTIM2	-	-	-	-	-	-
ADC1	3	-	-	-	-	-
T. Sensor	-	-	-	-	7	-
VBAT	-	-	-	-	7	-
VREFINT	-	-	-	-	7	-
HSE	-	-	-	-	-	-
LSE	-	4	-	-	-	-
MSI	-	-	-	-	-	-
LSI	-	-	-	-	-	-
MCO	-	-	-	-	-	-
EXTI	-	-	-	-	2	-
RTC	-	-	5	5	-	-
COMP1	8	8	5	5	-	-
SYST ERR	9	-	-	-	-	-

1. Numbers in table are links to corresponding subsections of *Section 7.3: Interconnection details*.
2. The "-" symbol in grayed cells means no interconnect.

7.3 Interconnection details

7.3.1 From timer (TIM1/TIM2) to timer (TIM1/TIM2)

Purpose

Some of the timers are linked together internally for synchronization or chaining.

When one timer is configured in Master Mode, it can reset, start, stop or clock the counter of another timer configured in Slave Mode. A description of the feature is provided in *Section 21.3.26: Timer synchronization*.

The modes of synchronization are detailed in:

- *Section 21.3.26: Timer synchronization* for advanced-control timers (TIM1)
- *Section 22.3.18: Timers and external trigger synchronization* for general-purpose timers (TIM2)

Triggering signals

The output (from Master) is on signal TIMx_TRGO (and TIMx_TRGO2 for TIM1) following a configurable timer event. The input (to slave) is on signals TIMx_ITR0/ITR1/ITR2/ITR3.

The input and output signals for TIM1 are shown in *Figure 96: Advanced-control timer block diagram*.

The possible master/slave connections are given in:

- *Table 136: TIM1 internal trigger connection*
- *Table 140: TIM2 internal trigger connection*

Active power mode(s)

Run, Sleep, Low-power run, Low-power sleep.

7.3.2 From timer (TIM1/TIM2) and EXTI to ADC (ADC1)

Purpose

General-purpose timer TIM2, advanced-control timer TIM1 and EXTI can be used to generate an ADC triggering event.

TIMx synchronization is described in *Section 21.3.27: ADC synchronization*.

ADC synchronization is described in *Section 15.4: Conversion on external trigger and trigger polarity (EXTSEL, EXTEN)*.

Triggering signals

The output (from timer) is on signal TIMx_TRGO, TIMx_TRGO2 or TIMx_CCx event.

The input (to ADC) is on signals EXT[15:0] and JEXT[15:0].

The connection between timers and ADC is provided in:

- *Table 67: External triggers*

Active power mode(s)

Run, Sleep, Low-power run, Low-power sleep.

7.3.3 From ADC (ADC1) to timer (TIM1)

Purpose

ADC1 can provide trigger event through watchdog signals to advanced-control timers (TIM1).

A description of the ADC analog watchdog setting is provided in *Section 15.7.1: Description of the analog watchdog*.

Trigger settings on the timer are provided in *Section 21.3.4: External trigger input*.

Triggering signals

The output (from ADC) is on signals ADC_AWD1_OUT (for ADC1) (one watchdog on ADC) and the input (to timer) on signal TIM1_ETR (external trigger).

Active power mode(s)

Run, Sleep, Low-power run, Low-power sleep.

7.3.4 From LSE to timer (TIM2)

Purpose

External clock LSE can be used as input to general-purpose timer (TIM2) on TIM2_ETR pin.

Active power mode(s)

Run, Sleep, Low-power run, Low-power sleep.

7.3.5 From RTC, COMP1 to low-power timers (LPTIM1/LPTIM2)

Purpose

RTC alarm A/B, RTC_TAMP2 input detection, COMP1_OUT can be used as trigger to start LPTIM counters (LPTIM1/2).

Triggering signals

This trigger feature is described in *Section 23.4.6: Trigger multiplexer* (and following sections).

The input selection is described in *Table 144: LPTIM1 external trigger connection* and *Table 145: LPTIM2 external trigger connection*.

Active power mode(s)

Run, Sleep, Low-power run, Low-power sleep, Stop 0, Stop 1.

7.3.6 From timer (TIM1/TIM2) to comparator (COMP1)

Purpose

Advanced-control timer (TIM1) and general-purpose timer (TIM2) can be used as blanking window input to COMP1.

The blanking function is described in *Section 16.3.7: Comparator output blanking function*.

The blanking sources are given in

- *Section 16.6.1: Comparator 1 control and status register (COMP1_CSR)* bits 20:18 BLANKING[2:0]

Triggering signals

Timer output signal TIMx_Ocx are the inputs to blanking source of COMP1.

Active power mode(s)

Run, Sleep, Low-power run, Low-power sleep.

7.3.7 From internal analog to ADC1

Purpose

Internal temperature sensor (VTS), internal reference voltage (VREFINT) and VBAT monitoring channel are connected to ADC1 input channel.

This is according to:

- *Section 15.2: ADC main features*
- *Section 15.3.8: Channel selection (CHSEL, SCANDIR, CHSELRMOD)*
- *Section 15.8: Temperature sensor and internal reference voltage*
- *Section 15.9: Battery voltage monitoring*

Active power mode(s)

Run, Sleep, low-power run, Low-power sleep.

7.3.8 From comparator (COMP1) to timers (TIM1/TIM2)

Purpose

Comparator (COMP1) output value can be connected to timers TIM1/TIM2 input captures or TIMx_ETR signals.

The connection to ETR is described in *Section 21.3.4: External trigger input*.

Comparator (COMP1) output value can also generate break input signal for timer TIM1 on input pins TIMx_BKIN or TIMx_BKIN2 through GPIO alternate function selection using open drain connection of I/Os.

The possible connections are given in:

- *Section 21.4.23: TIM1 option register 1 (TIM1_OR1)*
- *Section 21.4.28: TIM1 Alternate function register 2 (TIM1_AF2)*
- *Section 22.4.22: TIM2 option register 1 (TIM2_OR1)*
- *Section 21.4.27: TIM1 alternate function option register 1 (TIM1_AF1)*

Active power mode(s)

Run, Sleep, Low-power run, Low-power sleep.

7.3.9 From system errors to timer (TIM1)

Purpose

CSS, CPU hard fault, RAM parity error, FLASH ECC double error detection, PVD can generate system errors in the form of timer break toward timer TIM1.

The purpose of the break function is to protect power switches driven by PWM signals generated by the timer.

List(s) of possible break source(s) are described in:

- *Section 21.3.16: Using the break function* (TIM1)

Active power mode(s)

Run, Sleep, Low-power run, Low-power sleep.

8 Reset and clock control (RCC)

8.1 Reset

There are three types of reset, namely:

1. a system reset
2. a power reset
3. a backup domain reset

8.1.1 Power reset

A power reset is generated when one of the following events occurs:

1. a brown-out reset (BOR)
2. when exiting from Standby mode
3. when exiting from Shutdown mode

A brown-out reset, including power-on or power-down reset (POR/PDR), sets all registers to their reset values except the Backup domain.

When exiting Standby mode, all registers in the V_{CORE} domain are set to their reset value. Registers outside the V_{CORE} domain (RTC, WKUP, IWDG, and Standby/Shutdown modes control) are not impacted.

When exiting Shutdown mode, a Brown-out reset is generated, resetting all registers except those in the Backup domain.

8.1.2 System reset

A system reset sets all registers to their reset values, unless specified otherwise in the register description.

A system reset is generated when one of the following events occurs:

1. A low level on the NRST pin (external reset)
2. Window watchdog event (WWDG reset)
3. Independent watchdog event (IWDG reset)
4. A software (SW) reset (see *Software reset*)
5. Low-power mode security reset (see *Low-power mode security reset*)
6. Option byte loader reset (see *Option byte loader reset*)
7. A brown-out reset

The reset source can be identified by checking the reset flags in the *RCC control/status register (RCC_CSR)*.

These sources act on the NRST pin, always kept low during the delay phase. The CPU1 RESET service routine vector is selected via the BOOT0 and BOOT1.

Through specific option bits, the NRST (external reset) pin is configurable to operate as:

- Reset input/output (default at device delivery)
  Valid reset signal on the pin is propagated to the internal logic, and each internal reset source is led to a pulse generator, whose output drives this pin. The GPIO functionality (PB11) is not available. The pulse generator guarantees a minimum reset pulse

duration of 20 µs for each internal reset source to be output on the NRST pin. An internal reset holder option can be used, if enabled in the option bytes, to ensure that the pin is pulled low until its voltage reaches the V_{IL} threshold. This function makes it possible the detection of internal reset sources by external components when there is a significant capacitive load.

- Reset input
  In this mode any valid reset signal on the NRST pin is propagated to the device internal logic, but resets generated internally by the device are not visible on the pin. In this configuration, GPIO functionality (PB11) is not available.
- GPIO
  In this mode the pin can be used as PB11 standard GPIO. The reset function of the pin is not available. Reset is only possible from device internal reset sources and it is not propagated to the pin.

In case of an internal reset, the internal pull-up R_{PU} is deactivated to reduce power consumption through the pull-up resistor.

Figure 14. Simplified diagram of the reset circuit

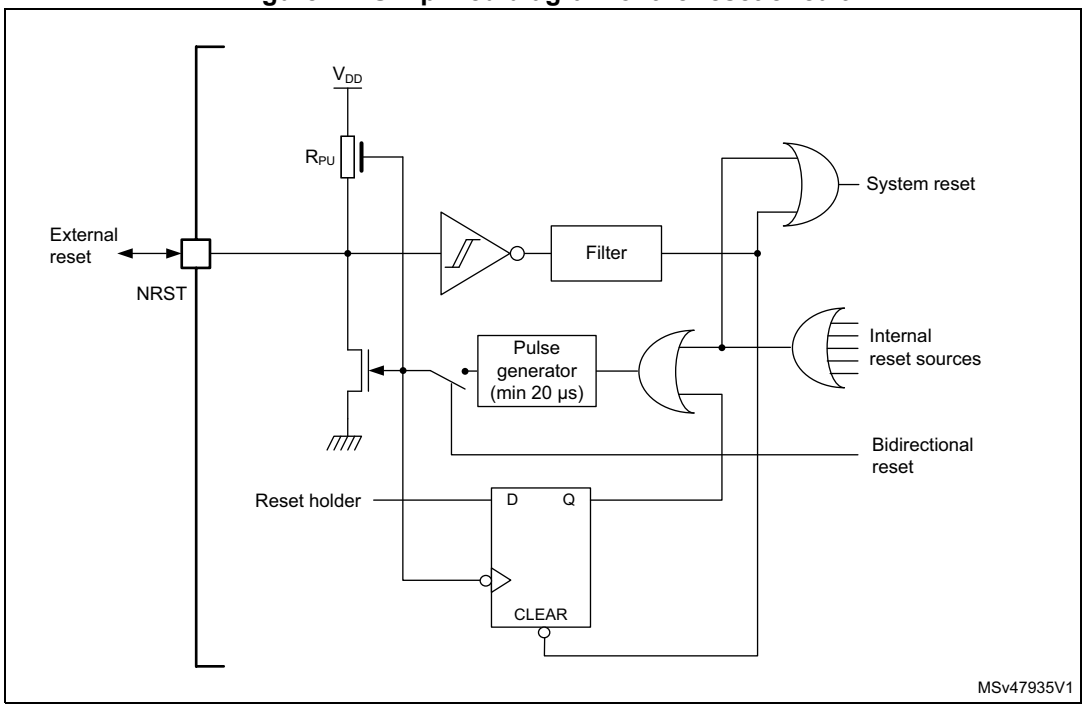

Caution: Upon power reset or wake-up from shutdown mode, the NRST pin is configured as Reset input/output and driven low by the system until it is reconfigured to the expected mode (when the option bytes are loaded, in the fourth clock cycle after the end of $t_{rstempo}$).

Software reset

The SYSRESETREQ bit in CPU1 application interrupt and reset control register may be set to force a software reset on the device (refer to PM0214 "*STM32 Cortex®-M4 MCUs and MPUs programming manual*", available on *www.st.com*).

The SYSRESETREQ bit in CPU2 application interrupt and reset control register may be set to force a software reset on the device.

Low-power mode security reset

To prevent that critical applications enter a low-power mode by mistake, two low-power mode security resets are available. If enabled in option bytes, the resets are generated in the following conditions:

1. When entering Standby mode: reset is enabled by resetting nRST_STDBY bit in User option Bytes. In this case, whenever a Standby mode entry sequence is successfully executed, the device is reset instead of entering Standby mode.
2. When entering Stop mode: reset is enabled by resetting nRST_STOP bit in User option bytes. In this case, whenever a Stop mode entry sequence is successfully executed, the device is reset instead of entering Stop mode.
3. When entering Shutdown mode: reset is enabled by resetting nRST_SHDW bit in User option bytes. In this case, whenever a Shutdown mode entry sequence is successfully executed, the device is reset instead of entering Shutdown mode.

For further information on the User option bytes refer to *Section 3.4.1: Option bytes description*.

Option byte loader reset

The option byte loader reset is generated when the OBL_LAUNCH bit is set in the FLASH_CR register. This bit is used to launch the option byte loading by software.

8.1.3 Backup domain reset

The backup domain has two specific resets.

A backup domain reset is generated when one of the following events occurs:

1. Software reset, triggered by setting the BDRST bit in the *RCC backup domain control register (RCC_BDCR)*.
2. V_{DD} or V_{BAT} power on, if both supplies have previously been powered off.

A backup domain reset only affects the LSE oscillator, the RTC, the Backup registers and the RCC Backup domain control register.

8.2 Clocks

Four different clock sources can be used to drive the system clock (SYSCLK):

- HSI16 (high speed internal)16 MHz RC oscillator clock
- MSI (multispeed internal) RC oscillator clock from 100 kHz to 48 MHz.
- HSE 32 MHz oscillator clock
- PLL clock

The MSI is used as system clock source after startup from Reset, configured at 4 MHz.

The devices have the following additional clock sources:

- LSI1: 32 kHz low speed internal RC, which may drive the independent watchdog and optionally the RTC used for Auto-wake-up from Stop and Standby modes (do not use for RF system Auto-wake-up).
- LSI2: 32 kHz low speed low drift internal RC, which may drive the independent watchdog and optionally the RTC used for Auto-wake-up from Stop and Standby modes.
- LSE: 32.768 kHz low speed external crystal, which optionally drives the RTC used for Auto-wake-up or the RF system Auto-wake-up from Stop and Standby modes, or the real-time clock (RTCCLK).

Each clock source can be switched on or off independently when it is not used, to optimize power consumption.

Several prescalers can be used to configure the AHB frequencies (HCLK1, HCLK2 and HCLK4) the high speed APB (PCLK2) and the low speed APB (PCLK1) domains. The maximum frequency of the AHB (HCLK1 and HCLK4), and of the PCLK1 and PCLK2 domains is 64 MHz. The maximum frequency of the AHB (HCLK2) domain is 32 MHz.

Most peripheral clocks are derived from their bus clock (HCLK, PCLK) except:

- The RNG clock, which is derived (selected by software) from one of the following sources:
  - LSE clock
  - LSI clock (LSI1 or LSI2)
  - MSI or PLLQCLK clock divided by 3
- The ADCs clock, which is derived (selected by software) from one of the three following sources:
  - system clock (SYSCLK only available in Run mode)
  - PLL VCO (PLLAPCLK only available in Run mode)
  - HSI clock (HSI only available in Run mode)
- The U(S)ARTs clocks, which are derived (selected by software) from one of the four following sources:
  - system clock (SYSCLK only available in Run mode)
  - HSI16 clock (only available in Run and Stop modes)
  - LSE clock (only available in Run and Stop modes)
  - APB clock (PCLK depending on which APB is mapped the U(S)ART only available in CRun when enabled in U(S)ARTxEN and CSleep when also enabled in U(S)ARTxSMEN)

  The wake-up from Stop mode is supported only when the clock is HSI16 or LSE.
- The I^2C clock, derived (selected by software) from one of the three following sources:
  - system clock (SYSCLK only available in Run mode)
  - HSI16 clock (only available in Run and Stop modes)
  - APB clock (PCLK depending on which APB is mapped the I^2C only available in CRun when enabled in I2C1EN and CSleep when also enabled in I2C1SMEN)

  The wake-up from Stop mode is supported only when the clock is HSI.
- The low-power timer (LPTIMx) clocks, which are derived (selected by software) from one of the five following sources:
  - LSI clock (LSI1 or LSI2 only available in Run and Stop modes)
  - LSE clock (only available in Run and Stop modes)
  - HSI16 clock (only available in Run mode)
  - APB clock (PCLK depending on which APB is mapped the LPTIMx only available in CRun when enabled in LPTIMxEN and CSleep when also enabled in LPTIMxSMEN)
  - External clock mapped on LPTIMx_IN1 (only available in Run and Stop modes)

  The functionality in Stop mode (including wake-up) is supported only when the clock is LSI or LSE, or in external clock mode.
- The RTC clock, which is derived (selected by software) from one of the three following sources:
  - LSE clock
  - LSI clock (LSI1 or LSI2)
  - HSE clock divided by 32

  The functionality in Stop mode (including wake-up) is supported only when the clock is LSI or LSE. When HSE/1024 is selected as RF system wake-up source HSEON bit

must be set by the application.

- The IWDG clock, which is always the LSI clock (LSI1 or LSI2).
- The RF system wake-up clock, which is derived (selected by software) from one of the three following sources:
  - LSE clock
  - LSI clock (LSI2, LSI1 shall not be used for RF system Auto-wake-up)
  - HSE clock divided by 1024

  The functionality in Stop mode (including wake-up) is supported only when the clock is LSI or LSE.
- The RF system clock is derived (selected by hardware) from one of the two following sources:
  - HSI16 clock
  - HSE clock

  The functionality in Stop mode is supported only when the clock is HSI16 is selected as wake-up clock by STOPWUCK.

The RCC feeds the CPU1 system timer (SysTick) external clock with the AHB clock (HCLK1) divided by 8. The SysTick can work either with this clock or directly with the CPU1 clock (HCLK1), configurable in the SysTick Control and status register.

FCLK1 acts as CPU1 free-running clock. For more details refer to PM0214.

The RCC feeds the CPU2 system timer (SysTick) external clock with the AHB clock (HCLK2) divided by 8. The SysTick can work either with this clock or directly with the CPU2 clock (HCLK2), configurable in the SysTick Control and status Register.

FCLK2 acts as CPU2 free-running clock.

The clock tree is detailed in *Figure 15*.

Figure 15. Clock tree

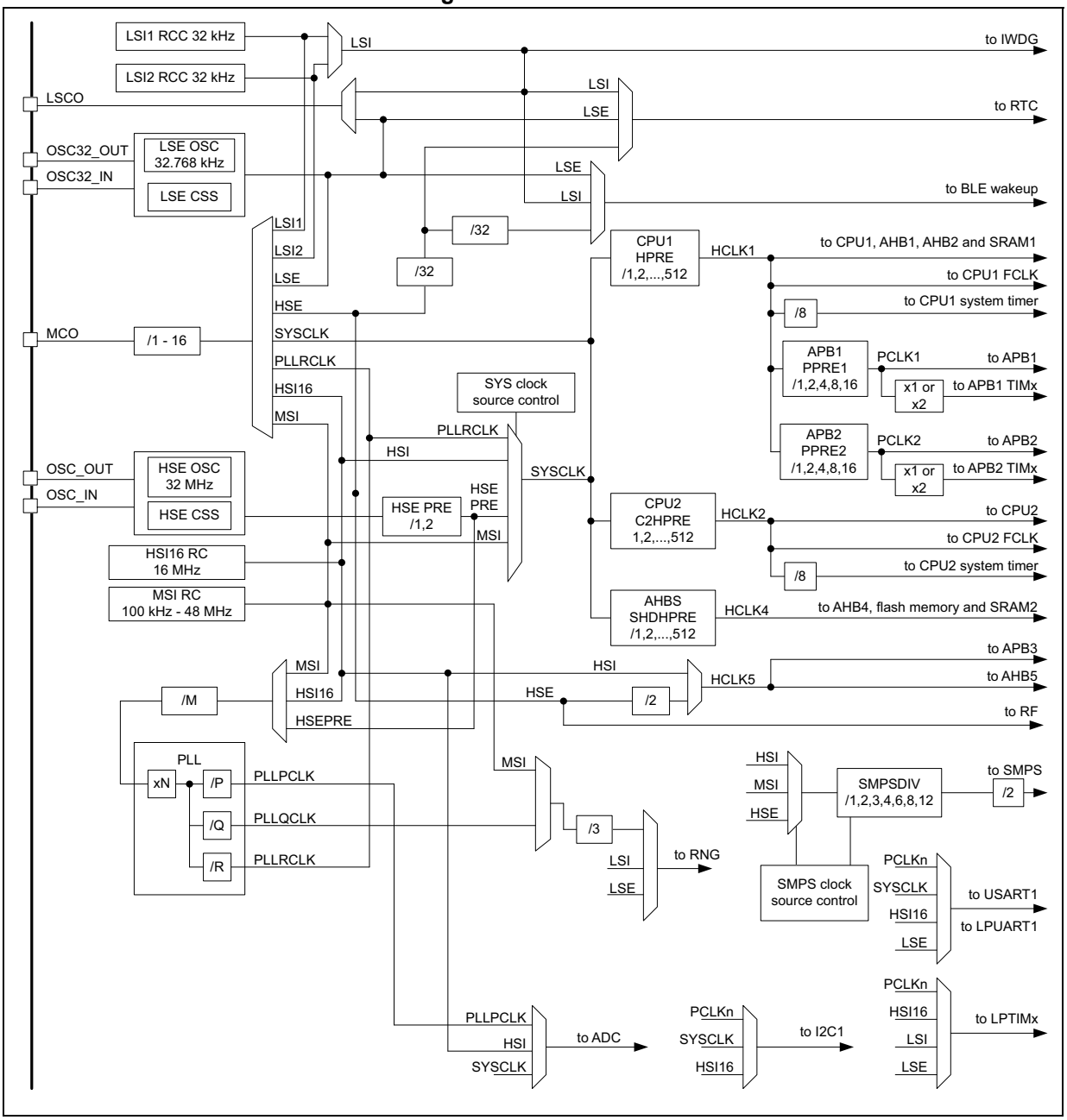

2. For full details about the internal and external clock source characteristics refer to the “Electrical characteristics” section in the device datasheet.
3. The ADC clock can be derived from the APB2 clock of the ADC bus interface, divided by a programmable factor (1, 2 or 4). When the programmable factor is 1, the APB2 prescaler must be equal to 1.

8.2.1 HSE clock

The high speed external clock signal (HSE) can be generated from two possible clock sources (see *Figure 16*):

- HSE external crystal
- HSE user external clock

The crystal has to be placed as close as possible to the oscillator pins to minimize output distortion and startup stabilization time. The loading capacitance are integrated and can be adjusted according to *Frequency tuning*.

Figure 16. HSE clock sources

Clock source	Hardware configuration
External clock	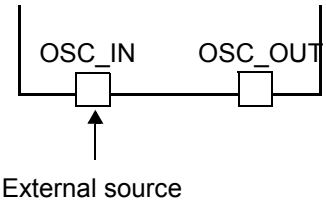
Crystal	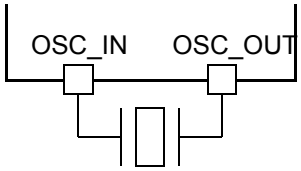

External crystal (HSE crystal)

The 32 MHz external oscillator has the advantage of producing a very accurate rate on the main clock, and is mandatory for any Radio operation.

The associated hardware configuration is shown in *Figure 16*. Refer to the electrical characteristics section of the *datasheet* for more details.

The HSERDY flag in the *RCC clock control register (RCC_CR)* indicates if the HSE oscillator is stable or not. At startup, the clock is not released until this bit is set by hardware. An interrupt can be generated if enabled in the *RCC clock interrupt enable register (RCC_CIER)*.

The HSE Crystal can be switched on and off using the HSEON bit in the *RCC clock control register (RCC_CR)*.

External source

In this mode, selectable by setting the HSEON bit in the *RCC clock control register (RCC_CR)*, an external clock source must be provided, with a frequency of 32 MHz. The external clock signal (sinus) with ~45 to 55 % duty cycle (refer to the datasheet) has to drive the OSC_IN pin, while the OSC_OUT pin must be left not connected (see *Figure 16*).

Note: For details on pin availability, refer to the pinout section in the corresponding device datasheet.

Frequency tuning

The HSE oscillator frequency can vary from one chip to another due to manufacturing process variations and used crystal. User can tune the HSE frequency in the application by

writing the HSETUNE bits in *RCC clock HSE register (RCC_HSECR)*. The HSE frequency can be measured by outputting the HSE clock on the MCO.

HSE oscillator gain and sense can be controlled by HSEGMC and HSES bits in *RCC clock HSE register (RCC_HSECR)*. Refer to AN5042 for the HSE trimming procedure.

8.2.2 HSI16 clock

The HSI16 clock signal is generated from an internal 16 MHz oscillator.

The HSI16 oscillator has the advantage of providing a clock source at low cost. It also has a faster startup time than the HSE crystal oscillator however, even with calibration the frequency is less accurate than an external crystal oscillator or ceramic resonator.

The HSI16 clock can be selected as system clock after wake-up from Stop modes (Stop0 or Stop1), see *Section 8.3: Low-power modes*. It can also be used as a backup clock source (auxiliary clock) if the HSE crystal oscillator fails, see *Section 8.2.10*.

When the RF system is enabled the HSI16 must be selected as system clock after wake-up from Stop modes.

The HSI16 clock is used as system clock after restart wake-up from Standby.

Calibration

RC oscillator frequencies can vary from one chip to another because of manufacturing process variations, this is why each device is factory calibrated by ST for 1 % accuracy at T_A = 25 °C.

After reset, the factory calibration value is loaded in the HSICAL[7:0] bits in the *RCC internal clock sources calibration register (RCC_ICSCR)*.

The RC oscillator speed can be affected by voltage or temperature variations, the user can trim the HSI16 frequency in the application using the HSITRIM bits in the *RCC internal clock sources calibration register (RCC_ICSCR)*.

The HSIRDY flag in the *RCC clock control register (RCC_CR)* indicates if the HSI16 RC is stable or not. At startup, the HSI16 RC output clock is not released until this bit is set by hardware.

The HSI16 RC can be switched on and off using the HSION bit in the *RCC clock control register (RCC_CR)*.

The HSI16 signal can also be used as a backup source (auxiliary clock) if the HSE crystal oscillator fails. Refer to *Section 8.2.10*.

8.2.3 MSI clock

The MSI clock signal is generated from an internal RC oscillator. Its frequency range can be adjusted by software by using the MSIRANGE[3:0] bits in the *RCC clock control register (RCC_CR)*. Twelve frequency ranges are available: 100 kHz, 200 kHz, 400 kHz, 800 kHz, 1 MHz, 2 MHz, 4 MHz (default value), 8 MHz, 16 MHz, 24 MHz, 32 MHz and 48 MHz.

The MSI clock is used as system clock after restart from Reset, wake-up from Shutdown low-power modes. After restart from Reset, the MSI frequency is set to its default value 4 MHz. Refer to *Section 8.3: Low-power modes*.

The MSI clock can be selected as system clock after a wake-up from Stop modes (Stop 0, Stop 1). Refer to *Section 8.3: Low-power modes*. It can also be used as a backup clock source (auxiliary clock) if the HSE crystal oscillator fails. Refer to *Section 8.2.10*.

In addition, when used in PLL-mode with the LSE, it provides a very accurate clock source which can be used by the PLL to run the system at the maximum speed 64 MHz.

The MSIRDY flag in the *RCC clock control register (RCC_CR)* indicates if the MSI RC is stable or not. At startup, the MSI RC output clock is not released until this bit is set by hardware. The MSI RC can be switched on and off by using the MSION bit in the *RCC clock control register (RCC_CR)*.

Hardware auto calibration with LSE (PLL-mode)

When a 32.768 kHz external oscillator is present in the application, it is possible to configure the MSI in a PLL-mode by setting the MSIPLLEN bit in the *RCC clock control register (RCC_CR)*. When configured in PLL-mode, the MSI automatically calibrates itself thanks to the LSE. This mode is available for all MSI frequency ranges.

Software calibration

The MSI RC oscillator frequency can vary from one chip to another due to manufacturing process variations, this is why each device is factory calibrated by ST for 1 % accuracy at 25 °C ambient temperature (T_A). After reset, the factory calibration value is loaded in the MSICAL[7:0] bits in the *RCC internal clock sources calibration register (RCC_ICSCR)*. If the application is subject to voltage or temperature variations, this may affect the RC oscillator speed. The MSI frequency in the application can be trimmed by using the MSITRIM[7:0] bits in the RCC_ICSCR register.

8.2.4 PLL

The device embeds a PLL providing three independent outputs. The internal PLL can be used to multiply the HSI, HSE or MSI output clock frequency. The PLL input frequency must be between 2.66 and 16 MHz. The selected clock source is divided by a programmable factor PLLM from 1 to 8 to provide a clock frequency in the requested input range. Refer to *Figure 15: Clock tree* and *RCC PLL configuration register (RCC_PLLCFGR)*.

The PLL configuration (selection of the input clock and multiplication factor) must be done before enabling the PLL. Once the PLL is enabled, these parameters cannot be changed.

To modify the PLL configuration, proceed as follows:

1. Disable the PLL by setting PLLON to 0 in *RCC clock control register (RCC_CR)*.
2. Wait until PLLRDY is cleared. The PLL is now fully stopped.
3. Change the desired parameter.
4. Enable the PLL again by setting PLLON to 1.
5. Enable the desired PLL outputs by configuring PLLPEN, PLLQEN, PLLREN in *RCC PLL configuration register (RCC_PLLCFGR)*.

An interrupt can be generated when the PLL is ready, if enabled in the *RCC clock interrupt enable register (RCC_CIER)*.

The PLL output frequency must not exceed 64 MHz.

The enable bit of the PLL output clock (PLLPEN, PLLQEN, PLLREN) can be modified at any time without stopping the corresponding PLL. PLLREN cannot be cleared if PLLRCLK is used as system clock.

8.2.5 LSE clock

The LSE crystal is a 32.768 kHz low-speed external crystal or ceramic resonator. It has the advantage of providing a low-power but highly accurate clock source to the real-time clock peripheral (RTC) for clock/calendar or other timing functions.

The resonator and the load capacitors have to be placed as close as possible to the oscillator pins in order to minimize output distortion and startup stabilization time. The loading capacitance values must be adjusted according to the selected oscillator.

Figure 17. LSE clock sources

Clock source	Hardware configuration
External clock	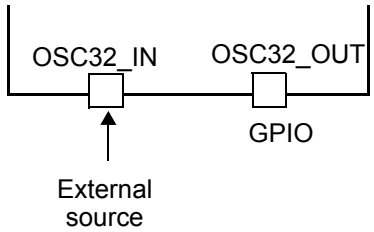
Crystal / ceramic resonators	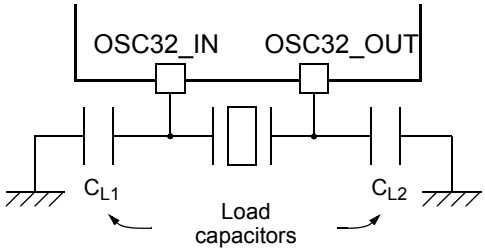

The LSE crystal is switched on and off using the LSEON bit in *RCC backup domain control register (RCC_BDCR)*. The crystal oscillator driving strength can be changed at runtime using the LSEDRV[1:0] bits in the *RCC backup domain control register (RCC_BDCR)* to obtain the best compromise between robustness and short start-up time on one side and low-power-consumption on the other side. The LSE drive can be decreased to the lower drive capability (LSEDRV = 00) when the LSE is ON. However, once LSEDRV is selected, the drive capability cannot be increased if LSEON = 1.

The LSERDY flag in the *RCC backup domain control register (RCC_BDCR)* indicates whether the LSE crystal is stable or not. At startup, the LSE crystal output clock signal is not released until this bit is set by hardware. An interrupt can be generated if enabled in the *RCC clock interrupt enable register (RCC_CIER)*.

External source (LSE bypass)

In this mode, selectable by setting the LSEBYP and LSEON bits in the *RCC AHB1 peripheral clocks enable in Sleep modes register (RCC_AHB1SMENR)* an external clock source must be provided, with a frequency of up to 1 MHz. The external clock signal (square, sinus or triangle) with ~50 % duty cycle has to drive the OSC32_IN pin while the OSC32_OUT pin can be used as GPIO, see *Figure 17*.

8.2.6 LSI1 clock

The LSI1 RC acts as a low-power clock source that can be kept running in Stop and Standby mode for the independent watchdog (IWDG), RTC and RF wake-up. The clock frequency is 32 kHz. For more details refer to the electrical characteristics section of the datasheet.

The LSI1 RC can be switched on and off using the LSI1ON bit in the *RCC control/status register (RCC_CSR)*.

The LSI1RDY flag in the *RCC control/status register (RCC_CSR)* indicates if the LSI1 oscillator is stable or not. At startup, the clock is not released until this bit is set by hardware. An interrupt can be generated if enabled in the *RCC clock interrupt enable register (RCC_CIER)*.

8.2.7 LSI2 clock

The LSI2 RC acts as a low drift low-power clock source that can be kept running in Stop and Standby mode for the independent watchdog (IWDG), and RTC wake-up. The clock frequency is ~ 32 kHz. For more details refer to the electrical characteristics section of the datasheets.

The LSI2 RC can be switched on and off using the LSI2ON bit in the *RCC control/status register (RCC_CSR)*.

The LSI2RDY flag in the *RCC control/status register (RCC_CSR)* indicates if the LSI2 oscillator is stable or not. At startup, the clock is not released until this bit is set by hardware. An interrupt can be generated if enabled in the *RCC clock interrupt enable register (RCC_CIER)*.

8.2.8 System clock (SYSCLK) selection

Four different clock sources can be used to drive the system clock (SYSCLK):

- MSI oscillator
- HSI16 oscillator
- HSE oscillator
- PLLRCLK

The system clock maximum frequency is 64 MHz. After a system reset, the MSI oscillator, at 4 MHz, is selected as system clock. When a clock source is used directly or through the PLL as a system clock, it is not possible to stop it.

A switch from one clock source to another occurs only if the target clock source is ready (clock stable after startup delay or PLL locked). If a clock source which is not yet ready is selected, the switch will occur when the clock source becomes ready. Status bits in the *RCC internal clock sources calibration register (RCC_ICSCR)* indicate which clock(s) is (are) ready and which clock is currently used as a system clock.

When waking up from Standby mode the HSI16 is selected as system clock.

8.2.9 Clock source frequency

Table 36 gives the different clock source frequencies.

Table 36. Maximum clock source frequency

MSI	HSI	HSE	PLL
48 MHz	16 MHz	32 MHz	64 MHz (VCO max = 344 MHz)

8.2.10 Clock security system (CSS) on HSE

The clock security system can be activated by software. In this case, the clock detector is enabled after the HSE oscillator startup delay, and disabled when this oscillator is stopped.

If a failure is detected on the HSE clock, the HSE oscillator is automatically disabled, a clock failure event is sent to the break input of the advanced-control timer (TIM1) and an interrupt is generated to inform the software about the failure (clock security system interrupt CSSI), allowing the MCU to perform rescue operations. The CSSI is linked to the CPU1 and CPU2 NMI (non-maskable interrupt) exception vector.

Note: Once the HSE CSS is enabled and if the HSE clock fails, the CSS interrupt occurs and a NMI is automatically generated. The NMI is executed indefinitely unless the CSS interrupt pending bit is cleared. As a consequence, in the NMI ISR user must clear the CSS interrupt by setting the CSSC bit in the RCC clock interrupt clear register (RCC_CICR).

If the HSE oscillator is used directly or indirectly as the system clock (indirectly means: it is used as PLL input clock, and the PLL clock is used as system clock), a detected failure causes a switch of the system clock to the MSI or the HSI16 oscillator depending on the STOPWUCK configuration in the *RCC clock configuration register (RCC_CFGR)*, and the disabling of the HSE oscillator. If the HSE clock (divided or not) is the clock entry of the PLL used as system clock when the failure occurs, the PLL is disabled too.

8.2.11 Clock security system on LSE (LSECSS)

The clock security system on LSE can be activated by software writing the LSECSSON bit in the *RCC control/status register (RCC_CSR)*. This bit can be disabled only by a hardware reset or RTC software reset, or after a failure detection on LSE. LSECSSON must be written after LSE and LSI are enabled (LSEON and LSI1ON enabled) and ready (LSERDY and LSIRDY set by hardware), and after the RTC clock has been selected by RTCSEL.

The CSS on LSE is working in all modes except VBAT. It is working also under system reset (excluding power on reset). If a failure is detected on the external 32 kHz oscillator, the LSE clock is no longer supplied to the RTC but no hardware action is made to the registers. If the MSI was in PLL-mode, this mode is disabled.

In Standby mode a wake-up is generated. In other modes an interrupt can be sent to wake up the software (see *RCC clock interrupt enable register (RCC_CIER)*, *RCC clock interrupt flag register (RCC_CIFR)*, *RCC clock interrupt clear register (RCC_CICR)*).

The software MUST then disable the LSECSSON bit, stop the defective 32 kHz oscillator (disabling LSEON), and change the RTC clock source (no clock or LSI or HSE, with RTCSEL), or take any required action to secure the application.

8.2.12 LSI source selection

The LSI used in the system can be selected to come either from LSI1 or LSI2. Whenever LSI2 is turned on by LSI2ON register bit, the LSI2 (when ready) is selected as LSI source.

To switch from LSI2 to LSI1 without interrupting the LSI clock, the LSI1 must first be switched on by LSI1ON register bit. The FW must verify that the LSI1 is ready by LSI1RDY register bit before disabling LSI2 in LSI2ON register bit.

8.2.13 SMPS step-down converter clock

The SMPS step-down converter clock source can be either the MSI, HSI16 or HSE clock. It is selected by programming the SMPSSEL in the *RCC SMPS step-down converter control register (RCC_SMPSCR)*. The system must always be configured so as to get a SMPS step-down converter clock frequency between 4 and 8 MHz. The appropriate division factor shall be set in SMPSDIV. There is a further fixed division by 2 before driving the clock to the SMPS step-down converter.

After a system reset, the HSI16 is selected as SMPS step-down converter clock.

When entering low power modes Stop1, Standby, or Shutdown the SMPS step-down converter clock source selected in SMPSSEL in the *RCC SMPS step-down converter control register (RCC_SMPSCR)* must be set to select the same source as the system clock in SW in the *RCC clock configuration register (RCC_CFGR)*. In Stop mode the clock source selected in SMPSSEL in *RCC SMPS step-down converter control register (RCC_SMPSCR)* must be set to select the same source as the system clock in STOPWUCK in *RCC clock configuration register (RCC_CFGR)*.

When waking up from Standby mode and powering on the V_{CORE} supply, the HSI16 is selected as SMPS step-down converter clock, independent from the selection in SMPSSEL.

When the Radio system is active the HSE is selected as SMPS step-down converter clock, independent from the selection in SMPSSEL.

The SMPS step-down converter clock source used is indicated by the SMPSSWS in *RCC SMPS step-down converter control register (RCC_SMPSCR)*.

A switch from one clock source to another occurs only if the target clock source is ready (clock stable after startup delay). If a not yet ready clock source is selected, the switch occurs only when the clock source becomes ready. Status bits in the *RCC internal clock sources calibration register (RCC_ICSCR)* indicate which clock(s) is (are) ready, and the SMPSSWS bit indicates the clock currently used as a SMPS step-down converter clock.

The division factor in SMPSDIV depends upon the selected SMPS step-down converter clock source in SMPSSEL. When MSI is selected in SMPSSEL, The MSIRANGE is also taken into account to determine the selected MSI frequency.This allows to switch from one clock source to another, by keeping the same SMPS step-down converter clock frequency. The MSI can be selected as SMPS step-down converter clock source only when a supported SMPS step-down converter clock MSIRANGE is set.

When the RF system is active, the HW selects automatically the HSE source with the current SMPSDIV division ratio.

Table 37. SMPS step-down converter clock source selection and division

SMPSSEL	HSI16	MSI				HSE
SMPSDIV	**16 MHz**	**16 MHz**	**24 MHz**	**32 MHz**	**48 MHz**	**32 MHz**
00	1 (8 MHz)	1 (8 MHz)	Reserved	2 (8 MHz)	3 (8 MHz)	2 (8 MHz)
01	2 (4 MHz)	2 (4 MHz)	3 (4 MHz)	4 (4MHz)	6 (4 MHz)	4 (4MHz)

Table 37. SMPS step-down converter clock source selection and division (continued)

SMPSSEL	HSI16	MSI				HSE
SMPSDIV	16 MHz	16 MHz	24 MHz	32 MHz	48 MHz	32 MHz
10	Reserved					
11	Reserved					

8.2.14 ADC clock

The ADC clock is derived from the system clock, from HSI or from the PLL output. It can reach 64 MHz and can be divided by the prescaler values 1, 2, 4, 6, 8, 10, 12, 16, 32, 64, 128 or 256 by configuring the ADC1_CCR register. It is asynchronous to the AHB clock. Alternatively, the ADC clock can be derived from the AHB clock of the ADC bus interface, divided by a programmable factor (1, 2 or 4). This programmable factor is configured using the CKMODE bit fields in the ADC1_CCR.

If the programmed factor is ‘1’, the APB2 prescaler must be set to ‘1’.

8.2.15 RTC clock

The RTCCLK clock source can be either the HSE/32, LSE or LSI clock. It is selected by programming the RTCSEL[1:0] bits in the *RCC backup domain control register (RCC_BDCR)*. This selection cannot be modified without resetting the Backup domain. The system must always be configured so as to get a PCLK frequency greater then or equal to the RTCCLK frequency for a proper operation of the RTC.

The LSE clock is in the Backup domain, whereas the HSE and LSI clocks are not. Consequently:

- If LSE is selected as RTC clock the RTC continues to work even if the V_{DD} supply is switched off, provided the V_{BAT} supply is maintained.
- If LSI is selected as the RTC clock the RTC state is not guaranteed if the V_{DD} supply is powered off.
- If the HSE clock divided by a prescaler is used as the RTC clock the RTC state is not guaranteed if the V_{DD} supply is powered off or if the internal voltage regulator is powered off (removing power from the V_{CORE} domain).

When the RTC clock is LSE or LSI, the RTC remains clocked and functional under system reset.

8.2.16 Timer clock

The timer clock frequencies are automatically defined by hardware. There are two cases:

1. If the APB prescaler equals 1, the timer clock frequencies are set to the same frequency as that of the APB domain.
2. Otherwise, they are set to twice (×2) the frequency of the APB domain.

8.2.17 Watchdog clock

If the Independent watchdog (IWDG) is started by either hardware option or software access, the LSI clock is forced on.

When neither the LSI1 oscillator nor the LSI2 oscillator is enabled when starting the IWDG, the LSI1 oscillator is forced on. After the LSI1 oscillator temporization, the clock is provided to the IWDG.

When LSI2 is switched on with the LSI2ON bit, the LSI clock is switched from LSI1 to LSI2.

When LSI2 is disabled by LSI2ON (when the IWDG is running), the LSI1 oscillator is forced on. The LSI clock is switched to LSI1 when ready, and only then LSI2 is stopped.

8.2.18 True RNG clock

The true random number generator (RNG) seed clock is derived from the LSE clock, LSI clock (LSI1 or LSI2), MSI or PLLQCLK clock divided by 3.

8.2.19 Clock-out capability

- MCO

  The microcontroller clock output (MCO) capability enables the clock to be output on the external MCO pin. One of the following clock signals can be selected as MCO clock:

  – LSI1 (available in Run and Stop modes)
  – LSI2 (available in Run and Stop modes)
  – LSE (available in Run and Stop modes)
  – MSI (available in Run mode)
  – HSI (available in Run mode, when enabled by HSION)
  – HSE (available in Run mode)
  – PLLRCLK (available in Run mode)
  – SYSCLK (available in Run mode)

  The selection is controlled by the MCOSEL[3:0] bits of the *RCC clock configuration register (RCC_CFGR)*. The selected clock can be divided with the MCOPRE[2:0] field of the *RCC clock configuration register (RCC_CFGR)*.

  The clock on MCO is available in Run down to Stop1 modes. Low frequency clocks (LSIx, LSE) are available down to Stop1 mode.

- LSCO

  The LSCO output enables a low speed clock to be output on the external LSCO pin:

  – LSI (LSI1 or LSI2)
  – LSE

  The selection is controlled by the LSCOSEL, and enabled with the LSCOEN in the *RCC backup domain control register (RCC_BDCR)*.

  The clock on LSCO is available in Run, Stop, and on one GPIO in Standby and Shutdown modes.

The configuration registers of the corresponding GPIO port must be programmed in alternate function mode.

8.2.20 Peripheral clocks enable

Most peripheral bus and kernel clocks can individually be enabled per CPU. The RCC_AHBxENR, and RCC_APBxENRy enable peripheral clocks for CPU1 and RCC_C2_AHBxENR, and RCC_C2_APBxENR for CPU2. The peripheral clocks will follow the CPU(s) state for which they are enabled, see *Table 38*.

Peripheral bus clock activity during the CPU Sleep mode is controlled by the peripheral clock CPU sleep mode enable bit of the RCC_AHBxSMENR, and RCC_APBxSMENRy for CPU1 and RCC_C2_AHBxSMENR, and RCC_C2_APBxSMENRy for CPU2 registers.The peripheral bus clock during Sleep mode will follow the CPU(s) state for which is it enabled, see *Table 38*.

Table 38. Peripheral clock enable

Peripheral					
xxxEN	**xxxSMEN**	**CPU mode**	**System mode**	**Bus clock**	**Kernel clock(1)**
0	x	Any	Any	Stopped	Stopped
1		CRun	Run	Clocked	Clocked
	0	CSleep and CStop	Run	Stopped	Clocked
	1	CSleep	Run	Clocked	Clocked
		CStop	Run	Stopped	Clocked
			Stop	Stopped	Clocked when selected from – HSI16 – LSI – LSE.
					Stopped when selected from – bus clock – SYSCLK – PLL clocks – MSI
			Standby or Shutdown	Stopped	Stopped

1. Only the peripherals I2C, LPTIM, USART, LPUART,true RNG and ADC have a kernel clock.

When the peripheral bus clock is not active, the peripheral registers read or write accesses are not supported.

When the peripheral bus clock is active the peripheral can be accessed by both CPUs regardless of which CPU has enabled the peripheral bus clock in its CPU xxxEN bit. However, when the peripheral bus clock is enabled by only one CPU, and this CPU enters low power mode, the peripheral bus clock is stopped (also depending on this CPUs xxxSMEN setting) and peripheral access for the other CPU is no longer supported. It is therefor good practice to enable the peripheral bus clock with the CPU dedicated clock enable.

When the peripheral kernel clock is not active, the peripheral functionality is stopped.

The enable bit has a synchronization mechanism to create a glitch free clock for the peripheral. After the enable bit is set, there is a two clock cycles delay before the clock becomes active.

Caution: Just after enabling the clock for a peripheral, software must wait for a delay before accessing the peripheral registers.

Note: The BLE-IP when active, will activate the BLE bus and SRAM2 bus interface clocks.

8.3 Low-power modes

- AHB and APB peripheral clocks, including DMA clock, can be disabled by software.
- Sleep and Low-power sleep modes stop the CPU clock. The memory interface clocks (Flash and SRAM1 and SRAM2 interfaces) can be stopped by software during Sleep mode. The AHB to APB bridge clocks are disabled by hardware during Sleep mode when all the clocks of the peripherals connected to them are disabled.
- Stop modes (Stop 0 and Stop 1) stops most clocks in the V_{CORE} domain and disables the PLL, the MSI and the HSE oscillators. The HSI16 may be kept running when requested by the IPs (USART1, I2C1) that make it possible to wake up from Stop modes.

  U(S)ART, LPUART and I^2C have the capability to enable the HSI16 oscillator even when the MCU is in Stop mode (if HSI16 is selected as the clock source for that peripheral).

  U(S)ART, LPUART and LPTIM can also be driven by the LSE oscillator when the system is in Stop mode (if LSE is selected as clock source for that peripheral) and the LSE oscillator is enabled (LSEON). In that case the LSE remains always ON in Stop mode (they do not have the capability to turn on the LSE oscillator).

  The LPTIM can also be driven by the LSI oscillator when the system is in Stop mode (if LSI is selected as clock source for that peripheral) and the LSI oscillator is enabled (LSI1ON or LSI2ON).
- Standby and Shutdown modes stops all the clocks in the V_{CORE} domain and disables the PLL, the HSI, the MSI and the HSE oscillators.

The low power modes mode can be overridden for debugging by setting the DBG_SLEEP, DBG_STOP or DBG_STANDBY bits in the DBGMCU_CR register. In addition the EXTI CDBGPWRUPREQ events can be used to allow debugging in Stop modes (see *Table 39*).

Table 39. Single core Low power debug configurations(1)

<table>
<tr><th rowspan="2">Mode</th><th>CDBGPWRUPREQ</th><th colspan="3">DBGMCU</th><th>Debug</th></tr>
<tr><th>CPU1</th><th>DBG_STANDBY</th><th>DBG_STOP</th><th>DBG_SLEEP</th><th>CPU1</th></tr>
<tr><td>Sleep</td><td>X</td><td>X</td><td>X</td><td>X</td><td>Enabled</td></tr>
<tr><td rowspan="2">Stop0 and Stop1</td><td>Disabled</td><td rowspan="3">X</td><td rowspan="2">Disabled</td><td rowspan="3">-</td><td>Disabled</td></tr>
<tr><td>Enabled</td><td>Enabled</td></tr>
<tr><td>Stop0 and Stop1</td><td>X</td><td>Enabled</td><td>Enabled</td></tr>
<tr><td rowspan="2">Standby</td><td rowspan="2">X</td><td>Disabled</td><td rowspan="2">-</td><td rowspan="2">-</td><td>Disabled</td></tr>
<tr><td>Enabled</td><td>Enabled</td></tr>
</table>

1. X = Do not use.

When leaving the Stop modes (Stop0 and Stop1), the system clock is either MSI or HSI, depending on the software configuration of the STOPWUCK bit in the RCC_CFGR register. When the RF system is enabled the HSI16 shall be selected as in STOPWUCK. When STOPWUCK select the HSI16 clock when leaving Stop mode, the C2HPRE is reset. to select divide by 1. The frequency (range and user trim) of the MSI oscillator is the one configured before entering Stop mode. The user trim of HSI16 is kept. If the MSI was in PLL-mode before entering Stop mode, the PLL-mode stabilization time must be waited for after

wake-up even if the LSE was kept ON during the Stop mode. Before entering Stop 0 mode with SMPS step-down converter enabled the HSI16 must be kept on by setting the HSIKERON register bit.

When leaving the Standby mode, the system clock is HSI.

When leaving the Shutdown modes, the system clock is MSI. The MSI frequency at wake-up from Shutdown mode is 4 MHz. The user trim is lost.

If a Flash memory programming operation is on going, Stop, Standby and Shutdown modes entry is delayed until the Flash memory interface access is finished. If an access to the APB domain is ongoing, Stop, Standby and Shutdown modes entry is delayed until the APB access is finished.

8.4 RCC registers

8.4.1 RCC clock control register (RCC_CR)

Address offset: 0x000

Reset value: 0x0000 0061 (after POR reset), 0x0000 0160 (after wake-up from Standby reset)

Access: No wait state, word, half-word and byte access

31	30	29	28	27	26	25	24	23	22	21	20	19	18	17	16
Res.	Res.	Res.	Res.	Res.	Res.	PLL RDY	PLL ON	Res.	Res.	Res.	HSEP RE	CSS ON	Res.	HSE RDY	HSE ON
						r	rw				rw	rs		r	rw

15	14	13	12	11	10	9	8	7	6	5	4	3	2	1	0
Res.	Res.	Res.	HSIKE RDY	HSI ASFS	HSI RDY	HSIKER ON	HSI ON	MSIRANGE[3:0]				Res.	MSI PLLEN	MSI RDY	MSI ON
			r	rw	r	rw	rw	rw	rw	rw	rw		rw	r	rw

Bits 31:26 Reserved, must be kept at reset value.

Bit 25 **PLLRDY:** System PLL clock ready flag

Set by hardware to indicate that the system PLL is locked.
0: PLL unlocked
1: PLL locked

Bit 24 **PLLON:** System PLL enable

Set and cleared by software to enable the PLL.
Cleared by hardware when entering Stop, Standby or Shutdown mode. This bit cannot be reset if the PLL clock is used as the system clock.
0: PLL OFF
1: PLL ON

Bits 23:21 Reserved, must be kept at reset value.

Bit 20 **HSEPRE:** HSE system clock and PLL M divider prescaler

Set and cleared by software to control the division factor of the system clock and PLL M divider input when selecting HSE clock.
0: SYSCLK and PLL M divider input clocks are not divided (HSE)
1: SYSCLK and PLL M divider input clocks are divided by 2 (HSE/2)

Bit 19 **CSSON:** HSE clock security system enable

Set by software to enable the clock security system. When CSSON is set, the HSE lock detector is enabled by hardware when the HSE oscillator is ready, and disabled by hardware if a HSE clock failure is detected. This bit is set only and is cleared by reset.
0: HSE clock security system OFF (clock detector OFF)
1: HSE clock security system ON (clock detector ON if the HSE oscillator is stable, OFF if not).

Bit 18 Reserved, must be kept at reset value.

Bit 17 **HSERDY:** HSE clock ready flag

Set by hardware to indicate that the HSE oscillator is stable.

0: HSE oscillator not ready

1: HSE oscillator ready

Note: Once the HSEON bit is cleared, HSERDY goes low after six HSE clock cycles. Regardless of the value of the HSEON bit, the HSE oscillator starts on RF demand when needed. It is possible to have HSEON = 0 and HSERDY = 1.

Bit 16 **HSEON:** HSE clock enable

Set and cleared by software.

Cleared by hardware to stop the HSE oscillator when entering Stop, Standby or Shutdown mode. This bit cannot be reset if the HSE oscillator is used directly or indirectly as the system clock.

0: HSE oscillator OFF

1: HSE oscillator ON

Bits 15:13 Reserved, must be kept at reset value.

Bit 12 **HSIKERDY**: HSI16 kernel clock ready flag for peripherals requests.

Set by hardware to indicate that HSI16 oscillator is stable when enabled by HSIKERON or a peripheral kernel clock request. Not set when HSI16 is enabled by software by setting HSION, or by wake-up from Standby.

0: HSI16 oscillator not ready

1: HSI16 oscillator ready

Bit 11 **HSIASFS:** HSI16 automatic start from Stop

Set and cleared by software. When the system wake-up clock is MSI, this bit is used to wake up the HSI16 is parallel of the system wake-up.

0: HSI16 oscillator is not enabled by hardware when exiting Stop mode with MSI as wake-up clock.

1: HSI16 oscillator is enabled by hardware when exiting Stop mode with MSI as wake-up clock.

Bit 10 **HSIRDY:** HSI16 clock ready flag. (After wake-up from Standby this bit is read ‘b1 once the HSI16 is ready)

Set by hardware to indicate that HSI16 oscillator is stable. This bit is set only when HSI16 is enabled by software by setting HSION, or by wake-up from Standby. Not set when HSI16 is enabled by HSIKERON or by IP request.

0: HSI16 oscillator not ready

1: HSI16 oscillator ready

Note: Once the HSION bit is cleared, HSIRDY goes low after 6 HSI16 clock cycles. The HSE oscillator starts on RF demand when needed, independently from the HSEON bit value. It is possible to have HSEON = 0 and HSERDY = 1.

Bit 9 **HSIKERON:** HSI16 always enable for peripheral kernel clocks.

Set and cleared by software to force HSI16 ON even in Stop modes. The HSI16 enabled by HSIKERON can only feed USART, LPUART and I^2C peripherals configured with HSI16 as kernel clock. Keeping the HSI16 ON in Stop mode avoids slowing down the communication speed because of the HSI16 startup time. This bit has no effect on HSION value.

0: No effect on HSI16 oscillator.

1: HSI16 oscillator is forced ON even in Stop mode.

Bit 8 **HSION:** HSI16 clock enable

Set and cleared by software.

Cleared by hardware to stop the HSI16 oscillator when entering Stop, Standby or Shutdown mode.

Set by hardware to force the HSI16 oscillator ON when STOPWUCK = 1 or HSIASFS = 1 when leaving Stop modes, or in case of failure of the HSE crystal oscillator.

This bit is set by hardware if the HSI16 is used directly or indirectly as system clock.

0: HSI16 oscillator OFF

1: HSI16 oscillator ON

Bits 7:4 **MSIRANGE[3:0]:** MSI clock ranges

These bits are configured by software to choose the frequency range of MSI when MSIRANGE is set.Twelve frequency ranges are available:

0000: range 0, ~100 kHz

0001: range 1, ~200 kHz

0010: range 2, ~400 kHz

0011: range 3, ~800 kHz

0100: range 4, ~1M Hz

0101: range 5, ~2 MHz

0110: range 6, ~4 MHz (reset value)

0111: range 7, ~8 MHz

1000: range 8, ~16 MHz

1001: range 9, ~24 MHz

1010: range 10, ~32 MHz

1011: range 11, ~48 MHz

others: not allowed (hardware write protection)

Note: MSIRANGE can be modified when MSI is OFF (MSION = 0) or when MSI is ready (MSIRDY = 1). MSIRANGE must NOT be modified when MSI is ON and NOT ready (MSION = 1 and MSIRDY = 0).

Bit 3 Reserved, must be kept at reset value.

Bit 2 **MSIPLLEN:** MSI clock PLL enable

Set and cleared by software to enable/ disable the PLL part of the MSI clock source.

MSIPLLEN must be enabled after LSE is enabled (LSEON enabled) and ready (LSERDY set by hardware).There is a hardware protection to avoid enabling MSIPLLEN if LSE is not ready.

This bit is cleared by hardware when LSE is disabled (LSEON = 0) or when the clock security system on LSE detects a LSE failure (refer to RCC_CSR register).

0: MSI PLL OFF

1: MSI PLL ON

Bit 1 **MSIRDY:** MSI clock ready flag (After reset this bit is read ‘b1 once the MSI is ready)

This bit is set by hardware to indicate that the MSI oscillator is stable.

0: MSI oscillator not ready

1: MSI oscillator ready

Note: Once the MSION bit is cleared, MSIRDY goes low after 6 MSI clock cycles.

Bit 0 **MSION:** MSI clock enable

This bit is set and cleared by software.

Cleared by hardware to stop the MSI oscillator when entering Stop, Standby or Shutdown mode.

Set by hardware to force the MSI oscillator ON when exiting Standby or Shutdown mode.

Set by hardware to force the MSI oscillator ON when STOPWUCK = 0 when exiting from Stop modes, or in case of a failure of the HSE oscillator

Set by hardware when used directly or indirectly as system clock.

0: MSI oscillator OFF

1: MSI oscillator ON

8.4.2 RCC internal clock sources calibration register (RCC_ICSCR)

Address offset: 0x004

Reset value: 0x40XX 00XX (X is factory-programmed)

Access: No wait state, word, half-word and byte access

31	30	29	28	27	26	25	24	23	22	21	20	19	18	17	16
Res.	HSITRIM[6:0]							HSICAL[7:0]							
	rw	rw	rw	rw	rw	rw	rw	r	r	r	r	r	r	r	r
15	14	13	12	11	10	9	8	7	6	5	4	3	2	1	0
MSITRIM[7:0]								MSICAL[7:0]							
rw	rw	rw	rw	rw	rw	rw	rw	r	r	r	r	r	r	r	r

Bit 31 Reserved, must be kept at reset value.

Bits 30:24 **HSITRIM[6:0]:** HSI16 clock trimming

These bits provide an additional user-programmable trimming value that is added to the HSICAL[7:0] bits. It can be programmed to adjust to variations in voltage and temperature that influence the frequency of the HSI16.

The default value is 64, which, when added to the HSICAL value, should trim the HSI16 to 16 MHz ± 1 %.

Bits 23:16 **HSICAL[7:0]:** HSI16 clock calibration

These bits are initialized at startup with the factory-programmed HSI16 calibration trim value. When HSITRIM is written, HSICAL is updated with the sum of HSITRIM and the factory trim value.

Bits 15:8 **MSITRIM[7:0]:** MSI clock trimming

These bits provide an additional user-programmable trimming value that is added to the MSICAL[7:0] bits. It can be programmed to adjust to variations in voltage and temperature that influence the frequency of the MSI.

The default value is 0, which, when added to the MSICAL value, should trim the MSI to its mid frequency.

Bits 7:0 **MSICAL[7:0]:** MSI clock calibration

These bits are initialized at startup with the factory-programmed MSI calibration trim value. When MSITRIM is written, MSICAL is updated with the sum of MSITRIM and the factory trim value.

8.4.3 RCC clock configuration register (RCC_CFGR)

Address offset: 0x008

Reset value: 0x0007 0000 (after POR reset), 0x0007 0001 (after wake-up from Standby)

Access: 0 ≤ wait state ≤ 2, word, half-word and byte access

One or two wait states inserted only if the access occurs during clock source switch.

From 0 to 15 wait states inserted if the access occurs when the APB or AHB prescalers values update is on going.

31	30	29	28	27	26	25	24	23	22	21	20	19	18	17	16
Res.	MCOPRE[2:0]			MCOSEL[3:0]				Res.	Res.	Res.	Res.	Res.	PPRE2F	PPRE1F	HPREF
	rw	rw	rw	rw	rw	rw	rw						r	r	r

15	14	13	12	11	10	9	8	7	6	5	4	3	2	1	0
STOP WUCK	Res.	PPRE2[2:0]			PPRE1[2:0]			HPRE[3:0]				SWS[1:0]		SW[1:0]	
rw		rw	rw	rw	rw	rw	rw	rw	rw	rw	rw	r	r	rw	rw

Bit 31 Reserved, must be kept at reset value.

Bits 30:28 **MCOPRE[2:0]:** Microcontroller clock output prescaler

These bits are set and cleared by software.

It is highly recommended to change this prescaler before MCO output is enabled.

000: MCO is divided by 1
001: MCO is divided by 2
010: MCO is divided by 4
011: MCO is divided by 8
100: MCO is divided by 16
Others: not allowed

Bits 27:24 **MCOSEL[3:0]:** Microcontroller clock output

Set and cleared by software.

0000: MCO output disabled, no clock on MCO
0001: SYSCLK system clock selected
0010: MSI clock selected.
0011: HSI16 clock selected.
0100: HSE clock selected (after stabilization, after HSERDY = 1)
0101: Main PLLRCLK clock selected
0110: LSI1 clock selected
0111: LSI2 clock selected
1000: LSE clock selected
1001: Reserved
1100: HSE clock selected (before stabilization, after HSEON = 1)
Others: Reserved

Note: This clock output may have some truncated cycles at startup or during MCO clock source switching.

Bits 23:19 Reserved, must be kept at reset value.

Bit 18 **PPRE2F:** PCLK2 prescaler flag (APB2)

Set and reset by hardware to acknowledge PCLK2 prescaler programming

Reset when a new prescaler value is programmed in PPRE2. set when the programmed value is actually applied.

0: PCLK2 prescaler value not yet applied
1: PCLK2 prescaler value applied

Bit 17 **PPRE1F:** PCLK1 prescaler flag (APB1)

Set and reset by hardware to acknowledge PCLK1 prescaler programming

Reset when a new prescaler value is programmed in PPRE1. set when the programmed value is actually applied.

0: PCLK1 prescaler value not yet applied
1: PCLK1 prescaler value applied

Bit 16 **HPREF:** HCLK1 prescaler flag (CPU1, AHB1, AHB2 and SRAM1)

Set and reset by hardware to acknowledge HCLK1 prescaler programming

Reset when a new prescaler value is programmed in HPRE. set when the programmed value is actually applied.

0: HCLK1 prescaler value not yet applied
1: HCLK1 prescaler value applied

Bit 15 **STOPWUCK:** Wakeup from Stop and CSS backup clock selection

Set and cleared by software to select the system clock used when exiting Stop mode.

The selected clock is also used as emergency clock for the clock security system on HSE.

Warning: STOPWUCK must not be modified when the HSE clock security system is enabled by CSSON in *RCC clock control register (RCC_CR)* register and the system clock is HSE (SWS = 10) or a switch on HSE is requested (SW= 10).

0: MSI oscillator selected as wake-up from stop clock and CSS backup clock.
1: HSI16 oscillator selected as wake-up from stop clock and CSS backup clock

Bit 14 Reserved, must be kept at reset value.

Bits 13:11 **PPRE2[2:0]:** PCLK2 high-speed prescaler (APB2)

Set and cleared by software to control the division factor of the PCLK2 clock (APB2).

The PPRE2F flag can be checked to know if the programmed PPRE2 prescaler value is applied.

0xx: HCLK1 not divided
100: HCLK1 divided by 2
101: HCLK1 divided by 4
110: HCLK1 divided by 8
111: HCLK1 divided by 16

Bits 10:8 **PPRE1[2:0]:** PCLK1 low-speed prescaler (APB1)

Set and cleared by software to control the division factor of the PCLK1 clock (APB1).

The PPRE1F flag can be checked to know if the programmed PPRE1 prescaler value is applied.

0xx: HCLK1 not divided
100: HCLK1 divided by 2
101: HCLK1 divided by 4
110: HCLK1 divided by 8
111: HCLK1 divided by 16

Bits 7:4 **HPRE[3:0]:** HCLK1 prescaler (CPU1, AHB1, AHB2 and SRAM1.)

Set and cleared by software to control the division factor of the HCLK1 clock (CPU1, AHB1, AHB2 and SRAM1).

The HPREF flag can be checked to know if the programmed HPRE prescaler value is applied.

Caution: The software must set correctly these bits to ensure that the system frequency does not exceed the maximum allowed frequency. After a write operation to these bits the register bit HPREF must be read to be sure that the new value has been taken into account.

0001: SYSCLK divided by 3
0010: SYSCLK divided by 5
0101: SYSCLK divided by 6
0110: SYSCLK divided by 10
0111: SYSCLK divided by 32
1000: SYSCLK divided by 2
1001: SYSCLK divided by 4
1010: SYSCLK divided by 8
1011: SYSCLK divided by 16
1100: SYSCLK divided by 64
1101: SYSCLK divided by 128
1110: SYSCLK divided by 256
1111: SYSCLK divided by 512
Others: SYSCLK not divided

Bits 3:2 **SWS[1:0]:** System clock switch status

Set and cleared by hardware to indicate which clock source is used as system clock.
00: MSI oscillator used as system clock
01: HSI16 oscillator used as system clock
10: HSE used as system clock
11: PLL used as system clock

Bits 1:0 **SW[1:0]:** System clock switch

Set and cleared by software to select system clock source (SYSCLK).
Configured by HW to force MSI oscillator selection when exiting Shutdown mode.
Configured by HW to force HSI16 oscillator selection when exiting Standby mode.
Configured by HW to force MSI or HSI16 oscillator selection when exiting Stop mode or in case of failure of the HSE oscillator, depending on STOPWUCK value.
00: MSI selected as system clock
01: HSI16 selected as system clock
10: HSE selected as system clock
11: PLL selected as system clock

Note: The latency when changing SW and SWS bits is set according to the new configuration when switching the SYSCLK clock source, in a maximum of three cycles of the previous clock.

8.4.4 RCC PLL configuration register (RCC_PLLCFGR)

Address offset: 0x00C

Reset value: 0x2204 0100

Access: No wait state, word, half-word and byte access

This register is used to configure the PLL clock outputs according to the following formulas:

- f(VCO clock) = f(PLL clock input) × (PLLN / PLLM)
- f(PLL_P) = f(VCO clock) / PLLP
- f(PLL_Q) = f(VCO clock) / PLLQ
- f(PLL_R) = f(VCO clock) / PLLR

31	30	29	28	27	26	25	24	23	22	21	20	19	18	17	16
PLLR[2:0]			PLLREN	PLLQ[2:0]			PLLQEN	Res.	Res.	PLLP[4:0]					PLLPEN
rw	rw	rw	rw	rw	rw	rw	rw			rw	rw	rw	rw	rw	rw

15	14	13	12	11	10	9	8	7	6	5	4	3	2	1	0
Res.	PLLN[6:0]							Res.	PLLM[2:0]			Res.	Res.	PLLSRC[1:0]	
	rw	rw	rw	rw	rw	rw	rw		rw	rw	rw			rw	rw

Bits 31:29 **PLLR[2:0]:** Main PLL division factor for PLLRCLK

Set and cleared by software to control the frequency of the main PLL output clock PLLRCLK. This output can be selected as system clock. These bits can be written only if the PLL is disabled.

PLLRCLK output clock frequency = VCO frequency / PLLR with PLLR = 2, 3, 4,... or 8 [VCO frequency / (N + 1)]

000: reserved
001: PLLR = 2
010: PLLR = 3
011: PLLR = 4
100: PLLR = 5
101: PLLR = 6
110: PLLR = 7
111: PLLR = 8

The software must set these bits so that 64 MHz is not exceeded on this domain.

Bit 28 **PLLREN:** Main PLL PLLRCLK output enable

Set and reset by software to enable the PLLRCLK output of the main PLL (used as system clock).

This bit cannot be written when PLLRCLK output of the PLL is used as System clock.

To save power, when the PLLRCLK output of the PLL is not used, the value of PLLREN should be 0.

0: PLLRCLK output disabled
1: PLLRCLK output enabled

Bits 27:25 **PLLQ[2:0]:** Main PLL division factor for PLLQCLK

Set and cleared by software to control the frequency of the main PLL output clock PLLQCLK. This output can be selected for true RNG clock. These bits can be written only if PLL is disabled.

PLLQCLK output clock frequency = VCO frequency / PLLQ with PLLQ = 2, 3, 4,... or 8 [VCO frequency / (N + 1)]

000: reserved
001: PLLQ = 2
010: PLLQ = 3
011: PLLQ = 4
100: PLLQ = 5
101: PLLQ = 6
110: PLLQ = 7
111: PLLQ = 8

The software must set these bits so that 64 MHz is not exceeded on this domain.

Bit 24 **PLLQEN:** Main PLL PLLQCLK output enable

Set and reset by software to enable the PLLQCLK output of the main PLL (used as system clock).

In order to save power, when the PLLQCLK output of the PLL is not used, the value of PLLQEN should be 0.

0: PLLQCLK output disable

1: PLLQCLK output enable

Bits 23:22 Reserved, must be kept at reset value.

Bits 21:17 **PLLP[4:0]:** Main PLL division factor for PLLPCLK.

Set and cleared by software to control the frequency of the main PLL output clock PLLPCLK. This output can be selected for ADC. These bits can be written only if PLL is disabled.

PLLPCLK output clock frequency = VCO frequency / PLLP with PLLP = 2, 3, 4,... or 32 [VCO frequency / (N + 1)]

0000: reserved

00001: PLLP = 2

00010: PLLP = 3

00011: PLLP = 4

00100: PLLP = 5

...

11111: PLLP = 32

The software must set these bits so that 64 MHz is not exceeded on this domain.

Bit 16 **PLLPEN:** Main PLL PLLPCLK output enable

Set and reset by software to enable the PLLPCLK output of the main PLL.

In order to save power, when the PLLPCLK output of the PLL is not used, the value of PLLPEN should be 0.

0: PLLPCLK output disable

1: PLLPCLK output enable

Bit 15 Reserved, must be kept at reset value.

Bits 14:8 **PLLN[6:0]:** Main PLL multiplication factor for VCO

Set and cleared by software to control the multiplication factor of the VCO. These bits can be written only when the PLL is disabled.

VCO output frequency = VCO input frequency x PLLN with 6 ≤ PLLN ≤ 127

0000000: PLLN = 0 reserved (must not be used)

0000001: PLLN = 1 reserved (must not be used)

...

0000101: PLLN = 5 reserved (must not be used)

0000110: PLLN = 6

1111111: PLLN = 127

The software must set these bits to ensure that the VCO output frequency is between 96 and 344 MHz.

Bit 7 Reserved, must be kept at reset value.

Bits 6:4 **PLLM[2:0]:** Division factor for the main PLL

Set and cleared by software to divide the PLL input clock before the VCO. These bits can be written only when the PLLis disabled.

VCO input frequency = PLL input clock frequency / PLLM with 1 ≤ PLLM ≤ 8

000: PLLM = 1
001: PLLM = 2
010: PLLM = 3
011: PLLM = 4
100: PLLM = 5
101: PLLM = 6
110: PLLM = 7
111: PLLM = 8

The software must set these bits to ensure that the VCO input frequency ranges from 2.66 to 16 MHz.

Bits 3:2 Reserved, must be kept at reset value.

Bits 1:0 **PLLSRC[1:0]:** Main PLL entry clock source

Set and cleared by software to select PLL clock source. These bits can be written only when PLLis disabled.

In order to save power, when no PLL is used, the value of PLLSRC should be 00.

00: No clock sent to PLL
01: MSI clock selected as PLL clock entry
10: HSI16 clock selected as PLL clock entry
11: HSE clock selected as PLL clock entry

8.4.5 RCC clock interrupt enable register (RCC_CIER)

Address offset: 0x018

Reset value: 0x0000 0000

Access: No wait state, word, half-word and byte access

31	30	29	28	27	26	25	24	23	22	21	20	19	18	17	16
Res.	Res.	Res.	Res.	Res.	Res.	Res.	Res.	Res.	Res.	Res.	Res.	Res.	Res.	Res.	Res.

15	14	13	12	11	10	9	8	7	6	5	4	3	2	1	0
Res.	Res.	Res.	Res.	LSI2 RDYIE	Res.	LSE CSSIE	Res.	Res.	Res.	PLL RDYIE	HSE RDYIE	HSI RDYIE	MSI RDYIE	LSE RDYIE	LSI1 RDYIE
				rw		rw				rw	rw	rw	rw	rw	rw

Bits 31:12 Reserved, must be kept at reset value.

Bit 11 **LSI2RDYIE:** LSI2 ready interrupt enable

Set and cleared by software to enable/disable interrupt caused by the LSI2 oscillator stabilization.

0: LSI2 ready interrupt disabled
1: LSI2 ready interrupt enabled

Bit 10 Reserved, must be kept at reset value.

Bit 9 **LSECSSIE:** LSE clock security system interrupt enable

Set and cleared by software to enable/disable interrupt caused by the clock security system on LSE.

0: Clock security interrupt caused by LSE clock failure disabled

1: Clock security interrupt caused by LSE clock failure enabled

Bits 8:6 Reserved, must be kept at reset value.

Bit 5 **PLLRDYIE:** PLL ready interrupt enable

Set and cleared by software to enable/disable interrupt caused by PLL lock.

0: PLL lock interrupt disabled

1: PLL lock interrupt enabled

Bit 4 **HSERDYIE:** HSE ready interrupt enable

Set and cleared by software to enable/disable interrupt caused by the HSE oscillator stabilization.

0: HSE ready interrupt disabled

1: HSE ready interrupt enabled

Bit 3 **HSIRDYIE:** HSI16 ready interrupt enable

Set and cleared by software to enable/disable interrupt caused by the HSI16 oscillator stabilization.

0: HSI16 ready interrupt disabled

1: HSI16 ready interrupt enabled

Bit 2 **MSIRDYIE:** MSI ready interrupt enable

Set and cleared by software to enable/disable interrupt caused by the MSI oscillator stabilization.

0: MSI ready interrupt disabled

1: MSI ready interrupt enabled

Bit 1 **LSERDYIE:** LSE ready interrupt enable

Set and cleared by software to enable/disable interrupt caused by the LSE oscillator stabilization.

0: LSE ready interrupt disabled

1: LSE ready interrupt enabled

Bit 0 **LSI1RDYIE:** LSI1 ready interrupt enable

Set and cleared by software to enable/disable interrupt caused by the LSI1 oscillator stabilization.

0: LSI1 ready interrupt disabled

1: LSI1 ready interrupt enabled

8.4.6 RCC clock interrupt flag register (RCC_CIFR)

Address offset: 0x01C

Reset value: 0x0000 0000

Access: No wait state, word, half-word and byte access

31	30	29	28	27	26	25	24	23	22	21	20	19	18	17	16
Res.	Res.	Res.	Res.	Res.	Res.	Res.	Res.	Res.	Res.	Res.	Res.	Res.	Res.	Res.	Res.
15	14	13	12	11	10	9	8	7	6	5	4	3	2	1	0
Res.	Res.	Res.	Res.	LSI2 RDYF	Res.	LSE CSSF	CSSF	Res.	Res.	PLL RDYF	HSE RDYF	HSI RDYF	MSI RDYF	LSE RDYF	LSI1 RDYF
				r		r	r			r	r	r	r	r	r

Bits 31:12 Reserved, must be kept at reset value.

Bit 11 **LSI2RDYF:** LSI2 ready interrupt flag

Set by hardware when the LSI2 clock becomes stable and LSI2RDYDIE is set.
Cleared by software setting the LSI2RDYC bit.
0: No clock ready interrupt caused by the LSI2 oscillator
1: Clock ready interrupt caused by the LSI2 oscillator

Bit 10 Reserved, must be kept at reset value.

Bit 9 **LSECSSF:** LSE clock security system interrupt flag

Set by hardware when a failure is detected in the LSE oscillator.
Cleared by software setting the LSECSSC bit.
0: No clock security interrupt caused by LSE clock failure
1: Clock security interrupt caused by LSE clock failure

Bit 8 **CSSF:** HSE clock security system interrupt flag

Set by hardware when a failure is detected in the HSE oscillator.
Cleared by software setting the CSSC bit.
0: No clock security interrupt caused by HSE clock failure
1: Clock security interrupt caused by HSE clock failure

Bits 7:6 Reserved, must be kept at reset value.

Bit 5 **PLLRDYF:** PLL ready interrupt flag

Set by hardware when the PLL locks and PLLRDYDIE is set.
Cleared by software setting the PLLRDYC bit.
0: No clock ready interrupt caused by PLL lock
1: Clock ready interrupt caused by PLL lock

Bit 4 **HSERDYF:** HSE ready interrupt flag

Set by hardware when the HSE clock becomes stable and HSERDYDIE is set.
Cleared by software setting the HSERDYC bit.
0: No clock ready interrupt caused by the HSE oscillator
1: Clock ready interrupt caused by the HSE oscillator

Bit 3 **HSIRDYF:** HSI16 ready interrupt flag

Set by hardware when the HSI16 clock becomes stable and HSIRDYDIE is set in a response to setting the HSION (refer to *RCC clock control register (RCC_CR)*). When HSION is not set but the HSI16 oscillator is enabled by the peripheral through a clock request, this bit is not set and no interrupt is generated.
Cleared by software setting the HSIRDYC bit.
0: No clock ready interrupt caused by the HSI16 oscillator
1: Clock ready interrupt caused by the HSI16 oscillator

Bit 2 **MSIRDYF:** MSI ready interrupt flag
Set by hardware when the MSI clock becomes stable and MSIRDYDIE is set.
Cleared by software setting the MSIRDYC bit.
0: No clock ready interrupt caused by the MSI oscillator
1: Clock ready interrupt caused by the MSI oscillator

Bit 1 **LSERDYF:** LSE ready interrupt flag
Set by hardware when the LSE clock becomes stable and LSERDYDIE is set.
Cleared by software setting the LSERDYC bit.
0: No clock ready interrupt caused by the LSE oscillator
1: Clock ready interrupt caused by the LSE oscillator

Bit 0 **LSI1RDYF:** LSI1 ready interrupt flag
Set by hardware when the LSI1 clock becomes stable and LSI1RDYDIE is set.
Cleared by software setting the LSI1RDYC bit.
0: No clock ready interrupt caused by the LSI1 oscillator
1: Clock ready interrupt caused by the LSI1 oscillator

8.4.7 RCC clock interrupt clear register (RCC_CICR)

Address offset: 0x020

Reset value: 0x0000 0000

Access: No wait state, word, half-word and byte access

31	30	29	28	27	26	25	24	23	22	21	20	19	18	17	16
Res.	Res.	Res.	Res.	Res.	Res.	Res.	Res.	Res.	Res.	Res.	Res.	Res.	Res.	Res.	Res.

15	14	13	12	11	10	9	8	7	6	5	4	3	2	1	0
Res.	Res.	Res.	Res.	LSI2 RDYC	Res.	LSE CSSC	CSSC	Res.	Res.	PLL RDYC	HSE RDYC	HSI RDYC	MSI RDYC	LSE RDYC	LSI1 RDYC
				w		w	w			w	w	w	w	w	w

Bits 31:12 Reserved, must be kept at reset value.

Bit 11 **LSI2RDYC:** LSI2 ready interrupt clear
This bit is set by software to clear the LSI2RDYF flag.
0: No effect
1: LSI2RDYF cleared

Bit 10 Reserved, must be kept at reset value.

Bit 9 **LSECSSC:** LSE clock security system interrupt clear
This bit is set by software to clear the LSECSSF flag.
0: No effect
1: Clear LSECSSF flag

Bit 8 **CSSC:** HSE clock security system interrupt clear
This bit is set by software to clear the HSE CSSF flag.
0: No effect
1: Clear HSE CSSF flag

Bits 7:6 Reserved, must be kept at reset value.

Bit 5 **PLLRDYC:** PLL ready interrupt clear
This bit is set by software to clear the PLLRDYF flag.
0: No effect
1: Clear PLLRDYF flag

Bit 4 **HSERDYC:** HSE ready interrupt clear
This bit is set by software to clear the HSERDYF flag.
0: No effect
1: Clear HSERDYF flag

Bit 3 **HSIRDYC:** HSI16 ready interrupt clear
This bit is set software to clear the HSIRDYF flag.
0: No effect
1: Clear HSIRDYF flag

Bit 2 **MSIRDYC:** MSI ready interrupt clear
This bit is set by software to clear the MSIRDYF flag.
0: No effect
1: MSIRDYF cleared

Bit 1 **LSERDYC:** LSE ready interrupt clear
This bit is set by software to clear the LSERDYF flag.
0: No effect
1: LSERDYF cleared

Bit 0 **LSI1RDYC:** LSI1 ready interrupt clear
This bit is set by software to clear the LSI1RDYF flag.
0: No effect
1: LSI1RDYF cleared

8.4.8 RCC SMPS step-down converter control register (RCC_SMPSCR)

Address offset: 0x024

Reset value: 0x0000 0301 (after POR reset), 0x0000 0300 (after wake-up from Standby)

Access: No wait state, word, half-word and byte access

31	30	29	28	27	26	25	24	23	22	21	20	19	18	17	16
Res.	Res.	Res.	Res.	Res.	Res.	Res.	Res.	Res.	Res.	Res.	Res.	Res.	Res.	Res.	Res.

15	14	13	12	11	10	9	8	7	6	5	4	3	2	1	0
Res.	Res.	Res.	Res.	Res.	Res.	SMPSSWS[1:0]		Res.	Res.	SMPSDIV[1:0]		Res.	Res.	SMPSSEL[1:0]	
						r	r			rw	rw			rw	rw

Bits 31:10 Reserved, must be kept at reset value.

Bits 9:8 **SMPSSWS[1:0]:** SMPS step-down converter clock switch status

Set and cleared by hardware to indicate which clock source is used as SMPS step-down converter clock when the SMPS is enabled. Whenever the HSE is active the HSE is used regardless of the settings in SMPSSEL. Whenever the SMPS step-down converter is disabled in PWR_CR5.SMPSEN, no clock is used.

00: HSI16 oscillator used as SMPS step-down converter clock

01: MSI oscillator used as SMPS step-down converter clock

10: HSE used as SMPS step-down converter clock

11: no clock is used

Bits 7:6 Reserved, must be kept at reset value.

Bits 5:4 **SMPSDIV[1:0]:** SMPS step-down converter clock prescaler

Set and cleared by software to control the division factor of the SMPS step-down converter clock. The SMPS step-down converter clock prescaler factor depend on both the SMPSDIV[1:0] and SMPSSEL[1:0] setting. See *Table 37*.

Bits 3:2 Reserved, must be kept at reset value.

Bits 1:0 **SMPSSEL[1:0]:** SMPS step-down converter clock selection.

Set and cleared by software to select SMPS step-down converter clock source (SMPSCLK).

00: HSI16 selected as SMPS step-down converter clock

01: MSI selected as SMPS step-down converter clock (the MSITRANGE shall be set to a supported value, see *Table 37*).

10: HSE selected as SMPS step-down converter clock

11: Reserved

Note: On a POR reset or NRST pin reset or when waking up from Shutdown the SMPSSEL is forced by hardware to select MSI (value b01). When waking up from Standby the SMPSSEL is forced by hardware to select HSI (value b00). When waking up from Stop modes the SMPSSEL is forced by hardware to select the MSI or HSI clock as defined in RCC_CFGR.STOPWUCK.

8.4.9 RCC AHB1 peripheral reset register (RCC_AHB1RSTR)

Address offset: 0x028

Reset value: 0x00000 0000

Access: No wait state, word, half-word and byte access

31	30	29	28	27	26	25	24	23	22	21	20	19	18	17	16
Res.	Res.	Res.	Res.	Res.	Res.	Res.	Res.	Res.	Res.	Res.	Res.	Res.	Res.	Res.	TSC RST
															rw

15	14	13	12	11	10	9	8	7	6	5	4	3	2	1	0
Res.	Res.	Res.	CRC RST	Res.	Res.	Res.	Res.	Res.	Res.	Res.	Res.	Res.	DMAMUX1 RST	Res.	DMA1 RST
			rw										rw		rw

Bits 31:17 Reserved, must be kept at reset value.

Bit 16 **TSCRST:** Touch sensing controller reset
Set and cleared by software.
0: No effect
1: Reset TSC

Bits 15:13 Reserved, must be kept at reset value.

Bit 12 **CRCRST:** CRC reset
Set and cleared by software.
0: No effect
1: Reset CRC

Bits 11:3 Reserved, must be kept at reset value.

Bit 2 **DMAMUX1RST:** DMAMUX reset
Set and cleared by software.
0: No effect
1: Reset DMAMUX1

Bit 1 Reserved, must be kept at reset value.

Bit 0 **DMA1RST:** DMA1 reset
Set and cleared by software.
0: No effect
1: Reset DMA1

8.4.10 RCC AHB2 peripheral reset register (RCC_AHB2RSTR)

Address offset: 0x02C

Reset value: 0x00000 0000

Access: No wait state, word, half-word and byte access

31	30	29	28	27	26	25	24	23	22	21	20	19	18	17	16
Res.	Res.	Res.	Res.	Res.	Res.	Res.	Res.	Res.	Res.	Res.	Res.	Res.	Res.	Res.	Res.
15	14	13	12	11	10	9	8	7	6	5	4	3	2	1	0
Res.	Res.	Res.	Res.	Res.	Res.	Res.	Res.	GPIOH RST	Res.	Res.	GPIOE RST		GPIOC RST	GPIOB RST	GPIOA RST
								rw			rw		rw	rw	rw

Bits 31:8 Reserved, must be kept at reset value.

Bit 7 **GPIOHRST:** IO port H reset
Set and cleared by software.
0: No effect
1: Reset IO port H

Bits 6:5 Reserved, must be kept at reset value.

Bit 4 **GPIOERST:** IO port E reset
Set and cleared by software.
0: No effect
1: Reset IO port E

Bit 2 **GPIOCRST:** IO port C reset
Set and cleared by software.
0: No effect
1: Reset IO port C

Bit 1 **GPIOBRST:** IO port B reset
Set and cleared by software.
0: No effect
1: Reset IO port B

Bit 0 **GPIOARST:** IO port A reset
Set and cleared by software.
0: No effect
1: Reset IO port A

8.4.11 RCC AHB4 peripheral reset register (RCC_AHB4RSTR)

Address offset: 0x030

Reset value: 0x00000 0000

Access: No wait state, word, half-word and byte access

31	30	29	28	27	26	25	24	23	22	21	20	19	18	17	16
Res.	Res.	Res.	Res.	Res.	Res.	FLASH RST	Res.	Res.	Res.	Res.	IPCC RST	HSEM RST	RNG RST	AES2 RST	PKA RST
						rw					rw	rw	rw	rw	rw
15	14	13	12	11	10	9	8	7	6	5	4	3	2	1	0
Res.	Res.	Res.	Res.	Res.	Res.	Res.	Res.	Res.	Res.	Res.	Res.	Res.	Res.	Res.	Res.

Bits 31:26 Reserved, must be kept at reset value.

Bit 25 **FLASHRST:** Flash interface reset
This bit can only be set when the Flash memory is in power-down. Set and cleared by software.
0: No effect
1: Reset Flash interface.

Bits 24:21 Reserved, must be kept at reset value.

Bit 20 **IPCCRST:** IPCC interface reset
Set and cleared by software.
0: No effect
1: Reset IPCC

Bit 19 **HSEMRST:** HSEM reset
Set and cleared by software.
0: No effect
1: Reset HSEM

Bit 18 **RNGRST:** True RNG reset
Set and cleared by software.
0: No effect
1: Reset true RNG

Bit 17 **AES2RST:** AES2 hardware accelerator reset
Set and cleared by software.
0: No effect
1: Reset AES2

Bit 16 **PKARST:** PKA hardware accelerator reset
Set and cleared by software.
0: No effect
1: Reset PKA

Bits 15:0 Reserved, must be kept at reset value.

8.4.12 RCC APB1 peripheral reset register 1 (RCC_APB1RSTR1)

Address offset: 0x038

Reset value: 0x0000 0000

Access: No wait state, word, half-word and byte access

31	30	29	28	27	26	25	24	23	22	21	20	19	18	17	16
LPTIM1 RST	Res.	Res.	Res.	Res.	Res.	Res.	.Res.	Res.	Res.	I2C1 RST	Res.	Res.	Res.	Res.	Res.
rw										rw					
15	14	13	12	11	10	9	8	7	6	5	4	3	2	1	0
Res.	Res.	Res.	Res.	Res.	Res.	Res.	Res.	Res.	Res.	Res.	Res.	Res.	Res.	Res.	TIM2 RST
															rw

Bit 31 **LPTIM1RST:** Low power timer 1 reset
Set and cleared by software.
0: No effect
1: Reset LPTIM1

Bits 30:22 Reserved, must be kept at reset value.

Bit 21 **I2C1RST:** I2C1 reset
Set and cleared by software.
0: No effect
1: Reset I2C1

Bits 20:1 Reserved, must be kept at reset value.

Bit 0 **TIM2RST:** TIM2 timer reset
Set and cleared by software.
0: No effect
1: Reset TIM2

8.4.13 RCC APB1 peripheral reset register 2 (RCC_APB1RSTR2)

Address offset: 0x03C

Reset value: 0x00000 0000

Access: No wait state, word, half-word and byte access

31	30	29	28	27	26	25	24	23	22	21	20	19	18	17	16
Res.	Res.	Res.	Res.	Res.	Res.	Res.	Res.	Res.	Res.	Res.	Res.	Res.	Res.	Res.	Res.

15	14	13	12	11	10	9	8	7	6	5	4	3	2	1	0
Res.	Res.	Res.	Res.	Res.	Res.	Res.	Res.	Res.	Res.	LPTIM2 RST	Res.	Res.	Res.	Res.	LPUART1 RST
										rw					rw

Bits 31:6 Reserved, must be kept at reset value.

Bit 5 **LPTIM2RST:** Low-power timer 2 reset
Set and cleared by software.
0: No effect
1: Reset LPTIM2

Bits 4:1 Reserved, must be kept at reset value.

Bit 0 **LPUART1RST:** Low-power UART 1 reset
Set and cleared by software.
0: No effect
1: Reset LPUART1

8.4.14 RCC APB2 peripheral reset register (RCC_APB2RSTR)

Address offset: 0x040

Reset value: 0x00000 0000

Access: No wait state, word, half-word and byte access

31	30	29	28	27	26	25	24	23	22	21	20	19	18	17	16
Res.	Res.	Res.	Res.	Res.	Res.	Res.	Res.	Res.	Res.	Res.	Res.	Res.	Res.	Res.	Res.

15	14	13	12	11	10	9	8	7	6	5	4	3	2	1	0
Res.	USART1 RST	Res.	SPI1 RST	TIM1 RST	Res.	ADC RST	Res.	Res.	Res.	Res.	Res.	Res.	Res.	Res.	Res.
	rw		rw	rw		rw									

Bits 31:15 Reserved, must be kept at reset value.

Bit 14 **USART1RST:** USART1 reset
Set and cleared by software.
0: No effect
1: Reset USART1

Bit 13 Reserved, must be kept at reset value.

Bit 12 **SPI1RST:** SPI1 reset
Set and cleared by software.
0: No effect
1: Reset SPI1

Bit 11 **TIM1RST:** TIM1 timer reset
Set and cleared by software.
0: No effect
1: Reset TIM1 timer

Bit 10 Reserved, must be kept at reset value.

Bit 9 **ADCRST:** ADC reset
Set and cleared by software.
0: No effect
1: Reset ADC

Bits 8:0 Reserved, must be kept at reset value.

8.4.15 RCC APB3 peripheral reset register (RCC_APB3RSTR)

Address offset: 0x044

Reset value: 0x00000 0000

Access: No wait state, word, half-word and byte access

31	30	29	28	27	26	25	24	23	22	21	20	19	18	17	16
Res.	Res.	Res.	Res.	Res.	Res.	Res.	Res.	Res.	Res.	Res.	Res.	Res.	Res.	Res.	Res.

15	14	13	12	11	10	9	8	7	6	5	4	3	2	1	0
Res.	Res.	Res.	Res.	Res.	Res.	Res.	Res.	Res.	Res.	Res.	Res.	Res.	Res.	Res.	RFRST
															rw

Bits 31:1 Reserved, must be kept at reset value.

Bit 0 **RFRST:** Radio system BLE reset.
Set and cleared by software.
0: No effect
1: Reset radio system BLE. The reset status of the radio system can be obtained from RFRSTS in *RCC control/status register (RCC_CSR)*.

8.4.16 RCC AHB1 peripheral clock enable register (RCC_AHB1ENR)

Address offset: 0x048

Reset value: 0x0000 0000

Access: No wait state, word, half-word and byte access

Note: When the peripheral clock is not active, the peripheral registers read or write access from CPU1 is not supported.

31	30	29	28	27	26	25	24	23	22	21	20	19	18	17	16
Res.	Res.	Res.	Res.	Res.	Res.	Res.	Res.	Res.	Res.	Res.	Res.	Res.	Res.	Res.	TSCEN

15	14	13	12	11	10	9	8	7	6	5	4	3	2	1	0
Res.	Res.	Res.	CRCEN	Res.	Res.	Res.	Res.	Res.	Res.	Res.	Res.	Res.	DMAMUX1EN	Res.	DMA1EN
			rw										rw		rw

Bits 31:17 Reserved, must be kept at reset value.

Bit 16 **TSCEN:** CPU1 Touch sensing controller clock enable
Set and cleared by software.
0: TSC clock disable for CPU1
1: TSC clock enable for CPU1

Bits 15:13 Reserved, must be kept at reset value.

Bit 12 **CRCEN:** CPU1 CRC clock enable
Set and cleared by software.
0: CRC clock disable for CPU1
1: CRC clock enable for CPU1

Bits 11:3 Reserved, must be kept at reset value.

Bit 2 **DMAMUX1:** CPU1 DMAMUX1 clock enable
Set and cleared by software.
0: DMAMUX1 clock disable for CPU1
1: DMAMUX1 clock enable for CPU1

Bit 1 Reserved, must be kept at reset value.

Bit 0 **DMA1EN:** CPU1 DMA1 clock enable
Set and cleared by software.
0: DMA1 clock disable for CPU1
1: DMA1 clock enable for CPU1

8.4.17 RCC AHB2 peripheral clock enable register (RCC_AHB2ENR)

Address offset: 0x04C

Reset value: 0x0000 0000

Access: No wait state, word, half-word and byte access

Note: When the peripheral clock is not active, the peripheral registers read or write access from CPU1 is not supported.

31	30	29	28	27	26	25	24	23	22	21	20	19	18	17	16
Res.	Res.	Res.	Res.	Res.	Res.	Res.	Res.	Res.	Res.	Res.	Res.	Res.	Res.	Res.	Res.

15	14	13	12	11	10	9	8	7	6	5	4	3	2	1	0
Res.	Res.	Res.	Res.	Res.	Res.	Res.	Res.	GPIOH EN	Res.	Res.	GPIOE EN	Res.	GPIOC EN	GPIOB EN	GPIOA EN
								rw			rw		rw	rw	rw

Bits 31:8 Reserved, must be kept at reset value.

Bit 7 **GPIOHEN:** CPU1 IO port H clock enable
Set and cleared by software.
0: IO port H clock disabled for CPU1
1: IO port H clock enabled for CPU1

Bits 6:5 Reserved, must be kept at reset value.

Bit 4 **GPIOEEN:** CPU1 IO port E clock enable
Set and cleared by software.
0: IO port E clock disabled for CPU1
1: IO port E clock enabled for CPU1

Bit 3 Reserved, must be kept at reset value.

Bit 2 **GPIOCEN:** CPU1 IO port C clock enable
Set and cleared by software.
0: IO port C clock disabled for CPU1
1: IO port C clock enabled for CPU1

Bit 1 **GPIOBEN:** CPU1 IO port B clock enable
Set and cleared by software.
0: IO port B clock disabled for CPU1
1: IO port B clock enabled for CPU1

Bit 0 **GPIOAEN:** CPU1 IO port A clock enable
Set and cleared by software.
0: IO port A clock disabled for CPU1
1: IO port A clock enabled for CPU1

8.4.18 RCC AHB4 peripheral clock enable register (RCC_AHB4ENR)

Address offset: 0x050

Reset value: 0x0208 0000

Access: No wait state, word, half-word and byte access

Note: When the peripheral clock is not active, the peripheral registers read or write access from CPU1 is not supported.

31	30	29	28	27	26	25	24	23	22	21	20	19	18	17	16
Res.	Res.	Res.	Res.	Res.	Res.	FLASH EN	Res.	Res.	Res.	Res.	IPCC EN	HSEM EN	RNG EN	AES2 EN	PKA EN
						rw					rw	rw	rw	rw	rw

15	14	13	12	11	10	9	8	7	6	5	4	3	2	1	0
Res.	Res.	Res.	Res.	Res.	Res.	Res.	Res.	Res.	Res.	Res.	Res.	Res.	Res.	Res.	Res.

Bits 31:26 Reserved, must be kept at reset value.

Bit 25 **FLASHEN** CPU1 Flash memory interface clock enable
This bit can only be cleared when the Flash memory is in Power down. Set and cleared by software.
0: Flash interface clock disable for CPU1
1: Flash interface clock enable for CPU1

Bits 24:21 Reserved, must be kept at reset value.

Bit 20 **IPCCEN** CPU1 IPCC interface clock enable
Set and cleared by software.
0: IPCC clock disable for CPU1
1: IPCC clock enable for CPU1

Bit 19 **HSEMEN** CPU1 HSEM clock enable
Set and cleared by software.
0: HSEM clock disable for CPU1
1: HSEM clock enable for CPU1

Bit 18 **RNGEN** CPU1 true RNG clocks enable
Set and cleared by software.
0: True RNG bus and kernel clocks disable for CPU1
1: True RNG bus and kernel clocks enable for CPU1

Bit 17 **AES2EN** CPU1 AES2 accelerator clock enable
Set and cleared by software.
0: AES2 clock disable for CPU1
1: AES2 clock enable for CPU1

Bit 16 **PKAEN** CPU1 PKA accelerator clock enable
Set and cleared by software.
0: PKA clock disable for CPU1
1: PKA clock enable for CPU1

Bits 15:0 Reserved, must be kept at reset value.

8.4.19 RCC APB1 peripheral clock enable register 1 (RCC_APB1ENR1)

Address: 0x058

Reset value: 0x0000 0400

Access: No wait state, word, half-word and byte access

Note: When the peripheral clock is not active, the peripheral registers read or write access from CPU1 is not supported.

31	30	29	28	27	26	25	24	23	22	21	20	19	18	17	16
LPTIM1 EN	Res.	Res.	Res.	Res.	Res.	Res.	Res.	Res.	Res.	I2C1 EN	Res.	Res.	Res.	Res.	Res.
rw										rw					

15	14	13	12	11	10	9	8	7	6	5	4	3	2	1	0
Res.	Res.	Res.	Res.	WWDG EN	RTCAPB EN	Res.	Res.	Res.	Res.	Res.	Res.	Res.	Res.	Res.	TIM2 EN
				rs	rw										rw

Bit 31 **LPTIM1EN:** CPU1 Low power timer 1 clocks enable
Set and cleared by software.
0: LPTIM1 bus and kernel clocks disabled for CPU1
1: LPTIM1 bus and kernel clocks enabled for CPU1

Bits 30:22 Reserved, must be kept at reset value.

Bit 21 **I2C1EN:** CPU1 I2C1 clocks enable
Set and cleared by software.
0: I2C1 bus and kernel clocks disabled for CPU1
1: I2C1 bus and kernel clocks enabled for CPU1

Bits 20:12 Reserved, must be kept at reset value.

Bit 11 **WWDGEN:** CPU1 Window watchdog clock enable
Set by software to enable the window watchdog clock. Reset by hardware system reset. This bit can also be set by hardware if the WWDG_SW option bit is reset.
0: Window watchdog clock disabled for CPU1
1: Window watchdog clock enabled for CPU1

Bit 10 **RTCAPBEN:** CPU1 RTC APB clock enable
Set and cleared by software
0: RTC APB clock disabled for CPU1
1: RTC APB clock enabled for CPU1

Bits 9:1 Reserved, must be kept at reset value.

Bit 0 **TIM2EN:** CPU1 TIM2 timer clock enable
Set and cleared by software.
0: TIM2 clock disabled for CPU1
1: TIM2 clock enabled for CPU1

8.4.20 RCC APB1 peripheral clock enable register 2 (RCC_APB1ENR2)

Address offset: 0x05C

Reset value: 0x00000 0000

Access: No wait state, word, half-word and byte access

Note: When the peripheral clock is not active, the peripheral registers read or write access from CPU1 is not supported.

31	30	29	28	27	26	25	24	23	22	21	20	19	18	17	16
Res.	Res.	Res.	Res.	Res.	Res.	Res.	Res.	Res.	Res.	Res.	Res.	Res.	Res.	Res.	Res.

15	14	13	12	11	10	9	8	7	6	5	4	3	2	1	0
Res.	Res.	Res.	Res.	Res.	Res.	Res.	Res.	Res.	Res.	LPTIM2 EN	Res.	Res.	Res.	Res.	LPUART1 EN
										rw					rw

Bits 31:6 Reserved, must be kept at reset value.

Bit 5 **LPTIM2EN** CPU1 Low power timer 2 clocks enable
Set and cleared by software.
0: LPTIM2 bus and kernel clocks disabled for CPU1
1: LPTIM2 bus and kernel clocks enabled for CPU1

Bits 4:1 Reserved, must be kept at reset value.

Bit 0 **LPUART1EN:** CPU1 Low power UART 1 clocks enable
Set and cleared by software.
0: LPUART1 bus and kernel clocks disabled for CPU1
1: LPUART1 bus and kernel clocks enabled for CPU1

8.4.21 RCC APB2 peripheral clock enable register (RCC_APB2ENR)

Address: 0x060

Reset value: 0x0000 0000

Access: word, half-word and byte access

Note: When the peripheral clock is not active, the peripheral registers read or write access from CPU1 is not supported.

31	30	29	28	27	26	25	24	23	22	21	20	19	18	17	16
Res.	Res.	Res.	Res.	Res.	Res.	Res.	Res.	Res.	Res.	Res.	Res.	Res.	Res.	Res.	Res.

15	14	13	12	11	10	9	8	7	6	5	4	3	2	1	0
Res.	USART1 EN	Res.	SPI1 EN	TIM1 EN	Res.	ADC EN	Res.	Res.	Res.	Res.	Res.	Res.	Res.	Res.	Res.
	rw		rw	rw		rw									

Bits 31:15 Reserved, must be kept at reset value.

Bit 14 **USART1EN:** CPU1 USART1 clocks enable
Set and cleared by software.
0: USART1 bus and kernel clocks disabled for CPU1
1: USART1 bus and kernel clocks enabled for CPU1

Bit 13 Reserved, must be kept at reset value.

Bit 12 **SPI1EN:** CPU1 SPI1 clock enable
Set and cleared by software.
0: SPI1 clock disabled for CPU1
1: SPI1 clock enabled for CPU1

Bit 11 **TIM1EN:** CPU1 TIM1 timer clock enable
Set and cleared by software.
0: TIM1 timer clock disabled for CPU1
1: TIM1P timer clock enabled for CPU1

Bit 10 Reserved, must be kept at reset value.

Bit 9 **ADCEN:** CPU1 ADC clock enable
Set and cleared by software.
0: ADC bus and kernel clocks disabled for CPU1
1: ADC bus and kernel clocks enabled for CPU1

Bits 8:0 Reserved, must be kept at reset value.

8.4.22 RCC AHB1 peripheral clocks enable in Sleep modes register (RCC_AHB1SMENR)

Address offset: 0x068

Reset value: 0x0001 1207

Access: No wait state, word, half-word and byte access

31	30	29	28	27	26	25	24	23	22	21	20	19	18	17	16
Res.	Res.	Res.	Res.	Res.	Res.	Res.	Res.	Res.	Res.	Res.	Res.	Res.	Res.	Res.	TSC SMEN
															rw
15	14	13	12	11	10	9	8	7	6	5	4	3	2	1	0
Res.	Res.	Res.	CRC SMEN	Res.	Res.	SRAM1 SMEN	Res.	Res.	Res.	Res.	Res.	Res.	DMAMUX1 SMEN	Res.	DMA1 SMEN
			rw			rw							rw		rw

Bits 31:17 Reserved, must be kept at reset value.

Bit 16 **TSCSMEN:** Touch sensing controller clock enable during CPU1 CSleep mode
Set and cleared by software.
0: TSC clock disabled by the clock gating during CPU1 Csleep and CStop modes
1: TSC clock enabled by the clock gating during CPU1 CSleep mode, disabled during CPU1 CStop mode

Bits 15:13 Reserved, must be kept at reset value.

Bit 12 **CRCSMEN:** CRC clock enable during CPU1 CSleep mode
Set and cleared by software.
0: CRC clock disabled by the clock gating during CPU1 Csleep and CStop modes
1: CRC clock enabled by the clock gating during CPU1 CSleep mode, disabled during CPU1 CStop mode

Bits 11:10 Reserved, must be kept at reset value.

Bit 9 **SRAM1SMEN:** SRAM1 interface clock enable during CPU1 CSleep mode
Set and cleared by software.
0: SRAM1 interface clock disabled by the clock gating during CPU1 Csleep and CStop modes
1: SRAM1 interface clock enabled by the clock gating during CPU1 CSleep mode, disabled during CPU1 CStop mode

Bits 8:3 Reserved, must be kept at reset value.

Bit 2 **DMAMUX1SMEN:** DMAMUX1 clock enable during CPU1 CSleep mode
Set and cleared by software during Sleep mode.
0: DMAMUX1 clock disabled by the clock gating during CPU1 Csleep and CStop modes
1: DMAMUX1 clock enabled by the clock gating during CPU1 CSleep mode, disabled during CPU1 CStop mode

Bit 1 Reserved, must be kept at reset value.

Bit 0 **DMA1SMEN:** DMA1 clock enable during CPU1 CSleep mode
Set and cleared by software.
0: DMA1 clock disabled by the clock gating during CPU1 Csleep and CStop modes
1: DMA1 clock enabled by the clock gating during CPU1 CSleep mode, disabled during CPU1 CStop mode.

8.4.23 RCC AHB2 peripheral clocks enable in Sleep modes register (RCC_AHB2SMENR)

Address offset: 0x06C

Reset value: 0x0001 009F

Access: No wait state, word, half-word and byte access

31	30	29	28	27	26	25	24	23	22	21	20	19	18	17	16
Res.	Res.	Res.	Res.	Res.	Res.	Res.	Res.	Res.	Res.	Res.	Res.	Res.	Res.	Res.	Res.

15	14	13	12	11	10	9	8	7	6	5	4	3	2	1	0
Res.	Res.	Res.	Res.	Res.	Res.	Res.	Res.	GPIOH SMEN	Res.	Res.	GPIOE SMEN	Res.	GPIOC SMEN	GPIOB SMEN	GPIOA SMEN
								rw			rw		rw	rw	rw

Bits 31:8 Reserved, must be kept at reset value.

Bit 7 **GPIOHSMEN:** IO port H clock enable during CPU1 CSleep mode
Set and cleared by software.
0: IO port H clock disabled by the clock gating during CPU1 Csleep and CStop modes
1: IO port H clock enabled by the clock gating during CPU1 CSleep mode, disabled during CPU1 CStop mode.

Bits 6:5 Reserved, must be kept at reset value.

Bit 4 **GPIOESMEN:** IO port E clock enable during CPU1 CSleep mode
Set and cleared by software.
0: IO port E clock disabled by the clock gating during CPU1 Csleep and CStop modes
1: IO port E clock enabled by the clock gating during CPU1 CSleep mode, disabled during CPU1 CStop mode

Bit 3 Reserved, must be kept at reset value.

Bit 2 **GPIOCSMEN:** IO port C clock enable during CPU1 CSleep mode
Set and cleared by software.
0: IO port C clock disabled by the clock gating during CPU1 Csleep and CStop modes
1: IO port C clock enabled by the clock gating during CPU1 CSleep mode, disabled during CPU1 CStop mode

Bit 1 **GPIOBSMEN:** IO port B clock enable during CPU1 CSleep mode
Set and cleared by software.
0: IO port B clock disabled by the clock gating during CPU1 Csleep and CStop modes
1: IO port B clock enabled by the clock gating during CPU1 CSleep mode, disabled during CPU1 CStop mode

Bit 0 **GPIOASMEN:** IO port A clock enable during CPU1 CSleep mode
Set and cleared by software.
0: IO port A clock disabled by the clock gating during CPU1 Csleep and CStop modes
1: IO port A clock enabled by the clock gating during CPU1 CSleep mode, disabled during CPU1 CStop mode.

8.4.24 RCC AHB4 peripheral clocks enable in Sleep and Stop modes register (RCC_AHB4SMENR)

Address offset: 0x070

Reset value: 0x0307 0100

Access: No wait state, word, half-word and byte access

31	30	29	28	27	26	25	24	23	22	21	20	19	18	17	16
Res.	Res.	Res.	Res.	Res.	Res.	FLASH SMEN	SRAM2S MEN	Res.	Res.	Res.	Res.	Res.	RNG SMEN	AES2 SMEN	PKA SMEN
						rw	rw						rw	rw	rw
15	14	13	12	11	10	9	8	7	6	5	4	3	2	1	0
Res.	Res.	Res.	Res.	Res.	Res.	Res.	Res.	Res.	Res.	Res.	Res.	Res.	Res.	Res.	Res.

Bits 31:26 Reserved, must be kept at reset value.

Bit 25 **FLASHSMEN:** Flash memory interface clock enable during CPU1 CSleep mode
Set and cleared by software.
0: Flash interface clock disabled by the clock gating during CPU1 Csleep and CStop modes
1: Flash interface clock enabled by the clock gating during CPU1 CSleep mode, disabled during CPU1 CStop mode.

Bit 24 **SRAM2SMEN:** SRAM2a and SRAM2b memory interface clock enable during CPU1 CSleep mode
Set and cleared by software.
0: SRAM2 clock disabled by the clock gating during CPU1 Csleep and CStop modes
1: SRAM2 clock enabled by the clock gating during CPU1 CSleep mode, disabled during CPU1 CStop mode.

Bits 23:19 Reserved, must be kept at reset value.

Bit 18 **RNGSMEN:** True RNG clock enable during CPU1 Csleep and CStop modes
Set and cleared by software.
0: True RNG bus clock disabled by the clock gating during CPU1 Csleep and CStop modes
1: True RNG bus clock enabled by the clock gating during CPU1 CSleep mode, disabled during CPU1 CStop mode.

Bit 17 **AES2MEN:** AES2 accelerator clock enable during CPU1 CSleep mode
Set and cleared by software.
0: AES2 clock disabled by the clock gating during CPU1 Csleep and CStop modes
1: AES2 clock enabled by the clock gating during CPU1 CSleep mode, .disabled during CPU1 CStop mode

Bit 16 **PKASMEN:** PKA accelerator clock enable during CPU1 CSleep mode
Set and cleared by software.
0: PKA clock disabled by the clock gating during CPU1 Csleep and CStop modes
1: PKA clock enabled by the clock gating during CPU1 CSleep mode, disabled during CPU1 CStop mode.

Bits 15:0 Reserved, must be kept at reset value.

8.4.25 RCC APB1 peripheral clocks enable in Sleep mode register 1 (RCC_APB1SMENR1)

Address: 0x078

Reset value: 0x85A0 4E01

Access: No wait state, word, half-word and byte access

31	30	29	28	27	26	25	24	23	22	21	20	19	18	17	16
LPTIM1 SMEN	Res.	Res.	Res.	Res.	Res.	Res.	Res.	Res.	Res.	I2C1 SMEN	Res.	Res.	Res.	Res.	Res.
rw										rw					
15	14	13	12	11	10	9	8	7	6	5	4	3	2	1	0
Res.	Res.	Res.	Res.	WWDG SMEN	RTCAPB SMEN	Res.	Res.	Res.	Res.	Res.	Res.	Res.	Res.	Res.	TIM2 SMEN
				rw	rw										rw

Bit 31 **LPTIM1SMEN:** Low power timer 1 clock enable during CPU1 Csleep and CStop mode
Set and cleared by software.
0: LPTIM1 bus clock disabled by the clock gating during CPU1 Csleep and CStop modes
1: LPTIM1 bus clock enabled by the clock gating during CPU1 CSleep mode, disabled during CPU1 CStop mode.

Bits 30:22 Reserved, must be kept at reset value.

Bit 21 **I2C1SMEN:** I2C1 clock enable during CPU1 Csleep and CStop modes
Set and cleared by software.
0: I2C1 bus clock disabled by the clock gating during CPU1 Csleep and CStop modes
1: I2C1 bus clock enabled by the clock gating during CPU1 CSleep mode, disabled during CPU1 CStop mode.

Bits 20:12 Reserved, must be kept at reset value.

Bit 11 **WWDGSMEN:** Window watchdog clocks enable during CPU1 CSleep mode
Set and cleared by software. This bit is forced to ‘1’ by hardware when the hardware WWDG_SW option is reset.
0: Window watchdog clock disabled by the clock gating during CPU1 Csleep and CStop modes
1: Window watchdog clocks enabled by the clock gating during CPU1 CSleep mode, disabled during CPU1 CStop mode.

Bit 10 **RTCAPBSMEN:** RTC bus clock enable during CPU1 CSleep mode
Set and cleared by software
0: RTC bus clock disabled during by the clock gating during CPU1 Csleep and CStop modes.
1: RTC bus clock enabled during by the clock gating during CPU1 CSleep mode, disabled during CPU1 CStop mode.

Bits 9:1 Reserved, must be kept at reset value.

Bit 0 **TIM2SMEN:** TIM2 timer clock enable during CPU1 CSleep mode
Set and cleared by software.
0: TIM2 clock disabled by the clock gating during CPU1 Csleep and CStop modes
1: TIM2 clock enabled by the clock gating during CPU1 CSleep mode, disabled during CPU1 CStop mode.

8.4.26 RCC APB1 peripheral clocks enable in Sleep mode register 2 (RCC_APB1SMENR2)

Address offset: 0x07C

Reset value: 0x0000 0021

Access: No wait state, word, half-word and byte access

31	30	29	28	27	26	25	24	23	22	21	20	19	18	17	16
Res.	Res.	Res.	Res.	Res.	Res.	Res.	Res.	Res.	Res.	Res.	Res.	Res.	Res.	Res.	Res.

15	14	13	12	11	10	9	8	7	6	5	4	3	2	1	0
Res.	Res.	Res.	Res.	Res.	Res.	Res.	Res.	Res.	Res.	LPTIM2 SMEN	Res.	Res.	Res.	Res.	LPUART1 SMEN
										rw					rw

Bits 31:6 Reserved, must be kept at reset value.

Bit 5 **LPTIM2SMEN** Low power timer 2 clock enable during CPU1 Csleep and CStop modes
Set and cleared by software.
0: LPTIM2 bus clock disabled by the clock gating during CPU1 Csleep and CStop modes.
1: LPTIM2 bus clock enabled by the clock gating during CPU1 CSleep mode, disabled during CPU1 CStop mode.

Bits 4:1 Reserved, must be kept at reset value.

Bit 0 **LPUART1SMEN:** Low power UART 1 clock enable during CPU1 Csleep and CStop modes.
Set and cleared by software.
0: LPUART1 bus clock disabled by the clock gating during CPU1 CSleep and CStop modes
1: LPUART1 bus clock enabled by the clock gating during CPU1 CSleep mode, disabled during CPU1 CStop mode.

8.4.27 RCC APB2 peripheral clocks enable in Sleep mode register (RCC_APB2SMENR)

Address: 0x080

Reset value: 0x0026 5A00

Access: word, half-word and byte access

31	30	29	28	27	26	25	24	23	22	21	20	19	18	17	16
Res.	Res.	Res.	Res.	Res.	Res.	Res.	Res.	Res.	Res.	Res.	Res.	Res.	Res.	Res.	Res.

15	14	13	12	11	10	9	8	7	6	5	4	3	2	1	0
Res.	USART1 SMEN	Res.	SPI1 SMEN	TIM1 SMEN	Res.	ADC SMEN	Res.	Res.	Res.	Res.	Res.	Res.	Res.	Res.	Res.
	rw		rw	rw		rw									

Bits 31:15 Reserved, must be kept at reset value.

Bit 14 **USART1SMEN:** USART1 clock enable during CPU1 Csleep and CStop modes.
Set and cleared by software.
0: USART1 bus clock disabled by the clock gating during CPU1 Csleep and CStop mode
1: USART1 bus clock enabled by the clock gating during CPU1 CSleep mode, disabled during CPU1 CStop mode.

Bit 13 Reserved, must be kept at reset value.

Bit 12 **SPI1SMEN:** SPI1 clock enable during CPU1 CSleep mode
Set and cleared by software.
0: SPI1 clock disabled by the clock gating during CPU1 Csleep and CStop mode
1: SPI1 clock enabled by the clock gating during CPU1 CSleep mode, disabled during CPU1 CStop mode.

Bit 11 **TIM1SMEN:** TIM1 timer clock enable during CPU1 CSleep mode
Set and cleared by software.
0: TIM1 timer clock disabled by the clock gating during CPU1 Csleep and CStop mode
1: TIM1 timer clock enabled by the clock gating during CPU1 CSleep mode, disabled during CPU1 CStop mode.

Bit 10 Reserved, must be kept at reset value.

Bit 9 **ADCSMEN:** ADC clock enable during CPU1 CSleep mode.
Set and cleared by software.
0: ADC clock disabled by the clock gating during CPU1 Csleep and CStop mode
1: ADC clock enabled by the clock gating during CPU1 CSleep mode, disabled during CPU1 CStop mode.

Bits 8:0 Reserved, must be kept at reset value.

8.4.28 RCC peripherals independent clock configuration register (RCC_CCIPR)

Address: 0x088

Reset value: 0x0000 0000

Access: no wait states, word, half-word and byte access

31	30	29	28	27	26	25	24	23	22	21	20	19	18	17	16
RNGSEL[1:0]		ADCSEL[1:0]		CLK48SEL[1:0]		Res.	Res.	Res.	Res.	LPTIM2SEL[1:0]		LPTIM1SEL[1:0]		Res.	Res.
rw	rw	rw	rw	rw	rw					rw	rw	rw	rw		

15	14	13	12	11	10	9	8	7	6	5	4	3	2	1	0
Res.	Res.	I2C1SEL[1:0]		LPUART1SEL[1:0]		Res.	Res.	Res.	Res.	Res.	Res.	Res.	Res.	USART1SEL[1:0]	
		rw	rw	rw	rw									rw	rw

Bits 31:30 **RNGSEL[1:0]:** RNG clock source selection
These bits are set and cleared by software to select the clock source used by the true RNG.
00: Use clock as selected by CLK48SEL
01: Select LSI clock
10: Select LSE clock
11: Reserved

Bits 29:28 **ADCSEL[1:0]:** ADC clock source selection
These bits are set and cleared by software to select the clock source used by the ADC interface.
00: No clock selected
01: HSI clock selected as ADC clock
10: PLL “P” clock (PLLPCLK) selected as ADC clock
11: System clock (SYSCLK) selected as ADC clock

Bits 27:26 **CLK48SEL[1:0]:** 48 MHz clock source selection
These bits are set and cleared by software to select the 48 MHz clock source used by true RNG. The true RNG clock source selection is furthermore selected by RNGSEL.
00: Reserved
01: Reserved
10: PLL "Q" clock (PLLQCLK) selected as 48 MHz clock
11: MSI clock selected as 48 MHz clock

Bits 25:22 Reserved, must be kept at reset value.

Bits 21:20 **LPTIM2SEL[1:0]:** Low power timer 2 clock source selection
These bits are set and cleared by software to select the LPTIM2 clock source.
00: PCLK selected as LPTIM2 clock
01: LSI clock selected as LPTIM2 clock
10: HSI16 clock selected as LPTIM2 clock
11: LSE clock selected as LPTIM2 clock

Bits 19:18 **LPTIM1SEL[1:0]:** Low power timer 1 clock source selection
These bits are set and cleared by software to select the LPTIM1 clock source.
00: PCLK selected as LPTIM1 clock
01: LSI clock selected as LPTIM1 clock
10: HSI16 clock selected as LPTIM1 clock
11: LSE clock selected as LPTIM1 clock

Bits 17:14 Reserved, must be kept at reset value.

Bits 13:12 **I2C1SEL[1:0]:** I2C1 clock source selection
These bits are set and cleared by software to select the I2C1 clock source.
00: PCLK selected as I2C1 clock
01: System clock (SYSCLK) selected as I2C1 clock
10: HSI16 clock selected as I2C1 clock
11: reserved

Bits 11:2 Reserved, must be kept at reset value.

Bits 1:0 **USART1SEL[1:0]:** USART1 clock source selection
This bit is set and cleared by software to select the USART1 clock source.
00: PCLK selected as USART1 clock
01: System clock (SYSCLK) selected as USART1 clock
10: HSI16 clock selected as USART1 clock
11: LSE clock selected as USART1 clock

8.4.29 RCC backup domain control register (RCC_BDCR)

Address offset: 0x090

Reset value: 0x0000 0000, (reset by Backup domain reset, except LSCOSEL, LSCOEN and BDRST, which are reset only by Backup domain power-on reset, not reset by wake-up from Standby and System reset)

Access: 0 ≤wait state ≤3, word, half-word and byte access.
Wait states are inserted in case of successive accesses to this register.

Note: The bits of the RCC backup domain control register (RCC_BDCR) are outside of the V_{CORE} domain. As a result, after Reset, these bits are write-protected and the DBP bit in the PWR control register 1 (PWR_CR1) has to be set before these can be modified. Refer to Section 6.1.2: Battery backup domain for further information. These bits (except LSCOSEL,

LSCOEN and BDRST) are only reset after a Backup domain reset. Any internal or external Reset will not have any effect on these bits.

31	30	29	28	27	26	25	24	23	22	21	20	19	18	17	16
Res.	Res.	Res.	Res.	Res.	Res.	LSCO SEL	LSCO EN	Res.	Res.	Res.	Res.	Res.	Res.	Res.	BDRST
						rw	rw								rw

15	14	13	12	11	10	9	8	7	6	5	4	3	2	1	0
RTCEN	Res.	Res.	Res.	Res.	Res.	RTCSEL[1:0]		Res.	LSE CSSD	LSE CSSON	LSEDRV[1:0]		LSE BYP	LSE RDY	LSEON
rw						rw	rw		r	rw	rw	rw	rw	r	rw

Bits 31:26 Reserved, must be kept at reset value.

Bit 25 **LSCOSEL:** Low speed clock output selection
Set and cleared by software.
0: LSI clock selected
1: LSE clock selected

Bit 24 **LSCOEN:** Low speed clock output enable
Set and cleared by software.
0: Low speed clock output (LSCO) disable
1: Low speed clock output (LSCO) enable

Bits 23:17 Reserved, must be kept at reset value.

Bit 16 **BDRST:** Backup domain software reset
Set and cleared by software.
0: Reset not activated
1: Resets the entire Backup domain

Bit 15 **RTCEN:** RTC clock enable
Set and cleared by software.
0: RTC clock disabled
1: RTC clock enabled

Bits 14:10 Reserved, must be kept at reset value.

Bits 9:8 **RTCSEL[1:0]:** RTC clock source selection
Set by software to select the clock source for the RTC. Once the RTC clock source has been selected, it cannot be changed anymore unless the Backup domain is reset, or unless a failure is detected on LSE (LSECSSD is set). The BDRST bit can be used to reset them.
00: No clock
01: LSE oscillator clock used as RTC clock
10: LSI oscillator clock used as RTC clock
11: HSE oscillator clock divided by 32 used as RTC clock

Bit 7 Reserved, must be kept at reset value.

Bit 6 **LSECSSD** CSS on LSE failure detection
Set by hardware to indicate when a failure has been detected by the clock security system on the external 32 kHz oscillator (LSE).
0: No failure detected on LSE (32 kHz oscillator)
1: Failure detected on LSE (32 kHz oscillator)

Bit 5 **LSECSSON** CSS on LSE enable

Set by software to enable the clock security system on LSE (32 kHz oscillator). LSECSSON must be enabled after the LSE oscillator is enabled (LSEON bit enabled) and ready (LSERDY flag set by hardware), and after the RTCSEL bit is selected.
Once enabled this bit cannot be disabled, except after a LSE failure detection (LSECSSD = 1). In that case the software MUST disable the LSECSSON bit.
0: CSS on LSE (32 kHz external oscillator) OFF
1: CSS on LSE (32 kHz external oscillator) ON

Bits 4:3 **LSEDRV[1:0]** LSE oscillator drive capability

Set by software to modulate the LSE oscillator drive capability.
00: ‘Xtal mode’ lower driving capability
01: ‘Xtal mode’ medium low driving capability
10: ‘Xtal mode’ medium high driving capability
11: ‘Xtal mode’ higher driving capability
The oscillator is in Xtal mode when it is not in bypass mode.

Bit 2 **LSEBYP:** LSE oscillator bypass

Set and cleared by software to bypass oscillator. This bit can be written only when the external 32 kHz oscillator is disabled (LSEON = 0 and LSERDY = 0).
0: LSE oscillator not bypassed
1: LSE oscillator bypassed

Bit 1 **LSERDY:** LSE oscillator ready

Set and cleared by hardware to indicate when the external 32 kHz oscillator is stable. After the LSEON bit is cleared, LSERDY goes low after six external low-speed oscillator clock cycles.
0: LSE oscillator not ready
1: LSE oscillator ready

Bit 0 **LSEON:** LSE oscillator enable

Set and cleared by software.
0: LSE oscillator OFF
1: LSE oscillator ON

8.4.30 RCC control/status register (RCC_CSR)

Address: 0x094

Reset value: 0x0C00 0000 (reset by System reset, except reset flags by POR only, not reset by wake-up from Standby)

Access: 0 ≤ wait state ≤ 3, word, half-word and byte access

Wait states are inserted in case of successive accesses to this register.

31	30	29	28	27	26	25	24	23	22	21	20	19	18	17	16
LPWR RSTF	WWDG RSTF	IWWG RSTF	SFT RSTF	BOR RSTF	PIN RSTF	OB L RSTF	Res.	RMVF	Res.	Res.	Res.	Res.	Res.	Res.	RF RSTS
r	r	r	r	r	r	r		rw							r
15	14	13	12	11	10	9	8	7	6	5	4	3	2	1	0
RFWKPSEL[1:0]		Res.	Res.	LSI2TRIM[3:0]				Res.	Res.	Res.	Res.	LSI2 RDY	LSI2 ON	LSI1 RDY	LSI1 ON
rw	rw			rw	rw	rw	rw					r	rw	r	rw

Bit 31 **LPWRRSTF:** Low-power reset flag
Set by hardware when a reset occurs due to illegal Stop, Standby or Shutdown mode entry.
Cleared by writing to the RMVF bit.
0: No illegal mode reset occurred
1: Illegal mode reset occurred

Bit 30 **WWDGRSTF:** Window watchdog reset flag
Set by hardware when a window watchdog reset occurs.
Cleared by writing to the RMVF bit.
0: No window watchdog reset occurred
1: Window watchdog reset occurred

Bit 29 **IWDGRSTF**: Independent window watchdog reset flag
Set by hardware when an independent watchdog reset domain occurs.
Cleared by writing to the RMVF bit.
0: No independent watchdog reset occurred
1: Independent watchdog reset occurred

Bit 28 **SFTRSTF:** Software reset flag
Set by hardware when a software reset occurs.
Cleared by writing to the RMVF bit.
0: No software reset occurred
1: Software reset occurred

Bit 27 **BORRSTF:** BOR flag
Set by hardware when a BOR occurs.
Cleared by writing to the RMVF bit.
0: No BOR occurred
1: BOR occurred

Bit 26 **PINRSTF:** Pin reset flag
Set by hardware when a reset from the NRST pin occurs.
Cleared by writing to the RMVF bit.
0: No reset from NRST pin occurred
1: Reset from NRST pin occurred

Bit 25 **OBLRSTF:** Option byte loader reset flag
Set by hardware when a reset from the Option Byte loading occurs.
Cleared by writing to the RMVF bit.
0: No reset from Option Byte loading occurred
1: Reset from Option Byte loading occurred

Bit 24 Reserved, must be kept at reset value.

Bit 23 **RMVF:** Remove reset flag
Set by software to clear the reset flags.
0: No effect
1: Clear the reset flags

Bits 22:17 Reserved, must be kept at reset value.

Bit 16 **RFRSTS:** Radio system BLE reset status
Set and cleared by hardware
0: Radio system BLE not in reset, radio system can be accessed
1: Radio system BLE under reset, radio system cannot be accessed

Bits 15:14 **RFWKPSEL[1:0]**: RF system wake-up clock source selection
Set by software to select the clock source for RF system wake-up logic.
00: No clock
01: LSE oscillator clock used as RF system wake-up clock
10: LSI oscillator clock used as RF system wake-up clock
11: HSE oscillator clock divided by 1024 used as RF system wake-up clock

Bits 13:12 Reserved, must be kept at reset value.

Bits 11:8 **LSI2TRIM[3:0]**: LSI2 oscillator bias trim.
Note: LSI2TRIM must be changed only when LSI2 is disabled (LSI2ON = 0).

Bits 7:4 Reserved, must be kept at reset value.

Bit 3 **LSI2RDY:** LSI2 oscillator ready
Set and cleared by hardware to indicate when the LSI2 oscillator is stable. After the LSI2ON bit is cleared, LSI2RDY goes low after three LSI2 oscillator clock cycles.
0: LSI2 oscillator not ready
1: LSI2 oscillator ready

Bit 2 **LSI2ON:** LSI2 oscillator enable and selection
Set and cleared by software.
0: LSI2 oscillator OFF (LSI1 selected on LSI)
1: LSI2 oscillator ON(LSI2 when ready selected on LSI)

Bit 1 **LSI1RDY:** LSI1 oscillator ready
Set and cleared by hardware to indicate when the LSI1 oscillator is stable. After the LSI1ON bit is cleared, LSI1RDY goes low after three LSI1 oscillator clock cycles. This bit can be set even if LSI1ON = 0 if the LSI1 is requested by the clock security system on LSE, by the Independent watchdog or by the RTC.
0: LSI1 oscillator not ready
1: LSI1 oscillator ready

Bit 0 **LSI1ON:** LSI1 oscillator enable
Set and cleared by software.
0: LSI1 oscillator OFF
1: LSI1 oscillator ON

8.4.31 RCC clock HSE register (RCC_HSECR)

Address: 0x09C

Reset value: 0x0000 0030 (reset by System reset, not reset by wake-up from Standby)

Access: Write access is protected and software must write a KEY (0xCAFE CAFE) as a word access in this register to unlock the register. Once unlocked a single write access (word, half-word or byte) can be performed to the register. It is then locked again. No wait states.

31	30	29	28	27	26	25	24	23	22	21	20	19	18	17	16
Res.	Res.	Res.	Res.	Res.	Res.	Res.	Res.	Res.	Res.	Res.	Res.	Res.	Res.	Res.	Res.

15	14	13	12	11	10	9	8	7	6	5	4	3	2	1	0
Res.	Res.	HSETUNE[5:0]						Res.	HSEGMC[2:0]			HSES	Res.	Res.	UNLOCKED
		r	r	r	r	r	r		rw	rw	rw	rw			r

Bits 31:14 Reserved, must be kept at reset value

Bits 13:8 **HSETUNE[5:0]:** HSE capacitor tuning
Can be changed by software. Do not change when HSE is on.
0x00: minimum load capacitance
0x3F maximum load capacitance

Bits 7 Reserved, must be kept at reset value

Bits 6:4 **HSEGMC[2:0]:** HSE current control
Can be changed by software. Do not change when HSE is on.
000: current max limit 0.18 mA/V
001: current max limit 0.57 mA/V
010: current max limit 0.78 mA/V
011: current max limit 1.13 mA/V
100: current max limit 0.61 mA/V
101: current max limit 1.65 mA/V
110: current max limit 2.12 mA/V
111: current max limit 2.84 mA/V

Note: The HSEGMC value must be greater than g_{mcrit}, whose value must be calculated according to AN2867 "Oscillator design guide for STM8S, STM8A and STM32 microcontrollers", available on www.st.com.

Bit 3 **HSES:** HSE Sense amplifier threshold
Can be changed by software. Do not change when HSE is on.
0: HSE bias current factor 1/2
1: HSE bias current factor 3/4

Bits 2:1 Reserved, must be kept at reset value

Bit 0 **UNLOCKED:** HSE clock control register unlocked
Set and cleared by hardware.
0: register locked, the key has not been programmed, or a write access has been performed to the register
1: Register unlocked. Key 0xCAFE CAFE has been written to unlock this register, enabling a single data write

8.4.32 RCC extended clock recovery register (RCC_EXTCFGR)

Address: 0x108

Reset value: 0x0003 0000.

Access: No wait state, word, half-word and byte access

31	30	29	28	27	26	25	24	23	22	21	20	19	18	17	16
Res.	Res.	Res.	Res.	Res.	Res.	Res.	Res.	Res.	Res.	Res.	RFCSS	Res.	Res.	C2HPREF	SHDHPREF
											r			r	r

15	14	13	12	11	10	9	8	7	6	5	4	3	2	1	0
Res.	Res.	Res.	Res.	Res.	Res.	Res.	Res.	C2HPRE[3:0]				SHDHPRE[3:0]			
								rw	rw	rw	rw	rw	rw	rw	rw

Bits 31:21 Reserved, must be kept at reset value

Bit 20 **RFCSS:** Radio system HCLK5 and APB3 selected clock source indication

Set and reset by hardware to indicate which clock source is selected for the Radio system HCLK5 and APB3 clock.

0: HSI16 used for Radio system HCLK5 and APB3 clock

1: HSE divided by 2 used for Radio system HCLK5 and APB3 clock

Bits 19:18 Reserved, must be kept at reset value

Bit 17 **C2HPREF:** HCLK2 prescaler flag (CPU2)

Set and reset by hardware to acknowledge HCLK2 prescaler programming

Reset when a new prescaler value is programmed in C2HPRE. set when the programmed value is actually applied.

0: HCLK2 prescaler value not yet applied

1: HCLK2 prescaler value applied

Bit 16 **SHDHPREF:** HCLK4 shared prescaler flag (AHB4, Flash memory and SRAM2)

Set and reset by hardware to acknowledge Shared HCLK4 prescaler programming

Reset when a new prescaler value is programmed in SHDHPRE. set when the programmed value is actually applied.

0: HCLK4 prescaler value not yet applied

1: HCLK4 prescaler value applied

Bits 15:8 Reserved, must be kept at reset value

Bits 7:4 **C2HPRE[3:0]:** HCLK2 prescaler (CPU2)

Set and cleared by software to control the division factor of the HCLK2 clock (CPU2).

The C2HPREF flag can be checked to know if the programmed C2HPRE prescaler value is applied.

Caution: The software must set correctly these bits to ensure that the system frequency does not exceed the maximum allowed frequency. After a write operation to these bits the register bit C2HPREF must be read to be sure that the new value has been taken into account.

0001: SYSCLK divided by 3
0010: SYSCLK divided by 5
0101: SYSCLK divided by 6
0110: SYSCLK divided by 10
0111: SYSCLK divided by 32
1000: SYSCLK divided by 2
1001: SYSCLK divided by 4
1010: SYSCLK divided by 8
1011: SYSCLK divided by 16
1100: SYSCLK divided by 64
1101: SYSCLK divided by 128
1110: SYSCLK divided by 256
1111: SYSCLK divided by 512
Others: SYSCLK not divided

Bit 3:0 **SHDHPRE[3:0]:** HCLK4 shared prescaler (AHB4, Flash memory and SRAM2)

Set and cleared by software to control the division factor of the Shared HCLK4 clock (AHB4, Flash memory and SRAM2).

The SHDHPREF flag can be checked to know if the programmed SHDHPRE prescaler value is applied.

Caution: The software must set correctly these bits to ensure that the system frequency does not exceed the maximum allowed frequency. After a write operation to these bits and before decreasing the voltage range the register bit SHDHPRE must be read to be sure that the new value has been taken into account.

0001: SYSCLK divided by 3
0010: SYSCLK divided by 5
0101: SYSCLK divided by 6
0110: SYSCLK divided by 10
0111: SYSCLK divided by 32
1000: SYSCLK divided by 2
1001: SYSCLK divided by 4
1010: SYSCLK divided by 8
1011: SYSCLK divided by 16
1100: SYSCLK divided by 64
1101: SYSCLK divided by 128
1110: SYSCLK divided by 256
1111: SYSCLK divided by 512
Others: SYSCLK not divided

8.4.33 RCC CPU2 AHB1 peripheral clock enable register (RCC_C2AHB1ENR)

Address offset: 0x148

Reset value: 0x0000 0000

Access: No wait state, word, half-word and byte access

Note: When the peripheral clock is not active, the peripheral registers read or write access from CPU2 is not supported.

31	30	29	28	27	26	25	24	23	22	21	20	19	18	17	16
Res.	Res.	Res.	Res.	Res.	Res.	Res.	Res.	Res.	Res.	Res.	Res.	Res.	Res.	Res.	TSCEN
															rw
15	14	13	12	11	10	9	8	7	6	5	4	3	2	1	0
Res.	Res.	Res.	CRCEN	Res.	Res.	SRAM1EN	Res.	Res.	Res.	Res.	Res.	Res.	DMAMUX1EN	Res.	DMA1EN
			rw			rw							rw		rw

Bits 31:17 Reserved, must be kept at reset value.

Bit 16 **TSCEN:** CPU2 Touch sensing controller clock enable

Set and cleared by software.
0: TSC clock disable for CPU2
1: TSC clock enable for CPU2

Bits 15:13 Reserved, must be kept at reset value.

Bit 12 **CRCEN:** CPU2 CRC clock enable
Set and cleared by software.
0: CRC clock disable for CPU2
1: CRC clock enable for CPU2

Bits 11:10 Reserved, must be kept at reset value.

Bit 9 **SRAM1EN:** CPU2 SRAM1 clock enable
Set and cleared by software.
0: SRAM1 clock disabled for CPU2
1: SRAM1 clock enabled for CPU2

Bits 8:3 Reserved, must be kept at reset value.

Bit 2 **DMAMUX1:** CPU2 DMAMUX1 clock enable
Set and cleared by software.
0: DMAMUX1 clock disable for CPU2
1: DMAMUX1 clock enable for CPU2

Bit 1 Reserved, must be kept at reset value.

Bit 0 **DMA1EN:** CPU2 DMA1 clock enable
Set and cleared by software.
0: DMA1 clock disable for CPU2
1: DMA1 clock enable for CPU2

8.4.34 RCC CPU2 AHB2 peripheral clock enable register (RCC_C2AHB2ENR)

Address offset: 0x14C

Reset value: 0x0000 0000

Access: No wait state, word, half-word and byte access

Note: When the peripheral clock is not active, the peripheral registers read or write access from CPU2 is not supported.

31	30	29	28	27	26	25	24	23	22	21	20	19	18	17	16
Res.	Res.	Res.	Res.	Res.	Res.	Res.	Res.	Res.	Res.	Res.	Res.	Res.	Res.	Res.	Res.

15	14	13	12	11	10	9	8	7	6	5	4	3	2	1	0
Res.	Res.	Res.	Res.	Res.	Res.	Res.	Res.	GPIOH EN	Res.	Res.	GPIOE EN	Res.	GPIOC EN	GPIOB EN	GPIOA EN
								rw			rw		rw	rw	rw

Bits 31:8 Reserved, must be kept at reset value.

Bit 7 **GPIOHEN:** CPU2 IO port H clock enable
Set and cleared by software.
0: IO port H clock disabled for CPU2
1: IO port H clock enabled for CPU2

Bits 6:5 Reserved, must be kept at reset value.

Bit 4 **GPIOEEN:** CPU2 IO port E clock enable
Set and cleared by software.
0: IO port E clock disabled for CPU2
1: IO port E clock enabled for CPU2

Bit 3 Reserved, must be kept at reset value.

Bit 2 **GPIOCEN:** CPU2 IO port C clock enable
Set and cleared by software.
0: IO port C clock disabled for CPU2
1: IO port C clock enabled for CPU2

Bit 1 **GPIOBEN:** CPU2 IO port B clock enable
Set and cleared by software.
0: IO port B clock disabled for CPU2
1: IO port B clock enabled for CPU2

Bit 0 **GPIOAEN:** CPU2 IO port A clock enable
Set and cleared by software.
0: IO port A clock disabled for CPU2
1: IO port A clock enabled for CPU2

8.4.35 RCC CPU2 AHB4 peripheral clock enable register (RCC_C2AHB4ENR)

Address offset: 0x150

Reset value: 0x0208 0000

Access: No wait state, word, half-word and byte access

Note: When the peripheral clock is not active, the peripheral registers read or write access from CPU2 is not supported.

31	30	29	28	27	26	25	24	23	22	21	20	19	18	17	16
Res.	Res.	Res.	Res.	Res.	Res.	FLASH EN	Res.	Res.	Res.	Res.	IPCC EN	HSEM EN	RNG EN	AES2 EN	PKA EN
						rw					rw	rw	rw	rw	rw

15	14	13	12	11	10	9	8	7	6	5	4	3	2	1	0
Res.	Res.	Res.	Res.	Res.	Res.	Res.	Res.	Res.	Res.	Res.	Res.	Res.	Res.	Res.	Res.

Bits 31:26 Reserved, must be kept at reset value.

Bit 25 **FLASHEN** CPU2 Flash interface clock enable
This bit can only be cleared when the Flash is in Power down. Set and cleared by software.
0: Flash interface clock disable for CPU2
1: Flash interface clock enable for CPU2

Bits 24:21 Reserved, must be kept at reset value.

Bit 20 **IPCCEN** CPU2 IPCC interface clock enable
Set and cleared by software.
0: IPCC clock disable for CPU2
1: IPCC clock enable for CPU2

Bit 19 **HSEMEN** CPU2 HSEM clock enable
Set and cleared by software.
0: HSEM clock disable for CPU2
1: HSEM clock enable for CPU2

Bit 18 **RNGEN** CPU2 true RNG clocks enable
Set and cleared by software.
0: True RNG bus and kernel clocks disable for CPU2
1: True RNG bus and kernel clocks enable for CPU2

Bit 17 **AES2EN** CPU2 AES2 accelerator clock enable
Set and cleared by software.
0: AES2 clock disable for CPU2
1: AES2 clock enable for CPU2

Bit 16 **PKAEN** CPU2 PKA accelerator clock enable
Set and cleared by software.
0: PKA clock disable for CPU2
1: PKA clock enable for CPU2

Bits 15:0 Reserved, must be kept at reset value.

8.4.36 RCC CPU2 APB1 peripheral clock enable register 1 (RCC_C2APB1ENR1)

Address: 0x158

Reset value: 0x0000 0400

Access: No wait state, word, half-word and byte access

Note: When the peripheral clock is not active, the peripheral registers read or write access from CPU2 is not supported.

31	30	29	28	27	26	25	24	23	22	21	20	19	18	17	16
LPTIM1 EN	Res.	Res.	Res.	Res.	Res.	Res.	Res.	Res.	Res.	I2C1 EN	Res.	Res.	Res.	Res.	Res.
rw										rw					

15	14	13	12	11	10	9	8	7	6	5	4	3	2	1	0
Res.	Res.	Res.	Res.	Res.	RTCAPB EN	Res.	Res.	Res.	Res.	Res.	Res.	Res.	Res.	Res.	TIM2 EN
					rw										rw

Bit 31 **LPTIM1EN:** CPU2 Low power timer 1 clocks enable
Set and cleared by software.
0: LPTIM1 bus and kernel clocks disabled for CPU2
1: LPTIM1 bus and kernel clocks enabled for CPU2

Bits 30:22 Reserved, must be kept at reset value.

Bit 21 **I2C1EN:** CPU2 I2C1 clocks enable
Set and cleared by software.
0: I2C1 bus and kernel clocks disabled for CPU2
1: I2C1 bus and kernel clocks enabled for CPU2

Bits 20:11 Reserved, must be kept at reset value.

Bit 10 **RTCAPBEN:** CPU2 RTC APB clock enable
Set and cleared by software
0: RTC APB clock disabled for CPU2
1: RTC APB clock enabled for CPU2

Bits 9:1 Reserved, must be kept at reset value.

Bit 0 **TIM2EN:** CPU2 TIM2 timer clock enable
Set and cleared by software.
0: TIM2 clock disabled for CPU2
1: TIM2 clock enabled for CPU2

8.4.37 RCC CPU2 APB1 peripheral clock enable register 2 (RCC_C2APB1ENR2)

Address offset: 0x15C

Reset value: 0x00000 0000

Access: No wait state, word, half-word and byte access

Note: When the peripheral clock is not active, the peripheral registers read or write access from CPU2 is not supported.

31	30	29	28	27	26	25	24	23	22	21	20	19	18	17	16
Res.	Res.	Res.	Res.	Res.	Res.	Res.	Res.	Res.	Res.	Res.	Res.	Res.	Res.	Res.	Res.

15	14	13	12	11	10	9	8	7	6	5	4	3	2	1	0
Res.	Res.	Res.	Res.	Res.	Res.	Res.	Res.	Res.	Res.	LPTIM2EN	Res.	Res.	Res.	Res.	
										rw					

Bits 31:6 Reserved, must be kept at reset value.

Bit 5 **LPTIM2EN** CPU2 Low power timer 2 clocks enable
Set and cleared by software.
0: LPTIM2 bus and kernel clocks disable for CPU2
1: LPTIM2 bus and kernel clocks enable for CPU2

Bits 4: Reserved, must be kept at reset value.

8.4.38 RCC CPU2 APB2 peripheral clock enable register (RCC_C2APB2ENR)

Address: 0x160

Reset value: 0x0000 0000

Access: word, half-word and byte access

Note: When the peripheral clock is not active the peripheral registers read or write access from CPU2 is not supported.

31	30	29	28	27	26	25	24	23	22	21	20	19	18	17	16
Res.	Res.	Res.	Res.	Res.	Res.	Res.	Res.	Res.	Res.	Res.	Res.	Res.	Res.	Res.	Res.

15	14	13	12	11	10	9	8	7	6	5	4	3	2	1	0
Res.	USART1 EN	Res.	SPI1 EN	TIM1 EN	Res.	ADC EN	Res.	Res.	Res.	Res.	Res.	Res.	Res.	Res.	Res.
	rw		rw	rw		rw									

Bits 31:15 Reserved, must be kept at reset value.

Bit 14 **USART1EN:** CPU2 UFSART1 clock enable
Set and cleared by software.
0: USART1 bus and kernel clocks disabled for CPU2
1: USART1 bus and kernel clocks enabled for CPU2

Bit 13 Reserved, must be kept at reset value.

Bit 12 **SPI1EN:** CPU2 SPI1 clock enable
Set and cleared by software.
0: SPI1 clock disabled for CPU2
1: SPI1 clock enabled for CPU2

Bit 11 **TIM1EN:** CPU2 TIM1 timer clock enable
Set and cleared by software.
0: TIM1 timer clock disabled for CPU2
1: TIM1P timer clock enabled for CPU2

Bit 10 Reserved, must be kept at reset value.

Bit 9 **ADCEN:** CPU2 ADC clock enable
Set and cleared by software.
0: ADC bus and kernel clocks disabled for CPU2
1: ADC bus and kernel clocks enabled for CPU2

Bits 8:0 Reserved, must be kept at reset value.

8.4.39 RCC CPU2 APB3 peripheral clock enable register (RCC_C2APB3ENR)

Address offset: 0x164

Reset value: 0x00000 0000

Access: No wait state, word, half-word and byte access

Note: When the peripheral clock is not active, the peripheral registers read or write access from CPU2 is not supported.

31	30	29	28	27	26	25	24	23	22	21	20	19	18	17	16
Res.	Res.	Res.	Res.	Res.	Res.	Res.	Res.	Res.	Res.	Res.	Res.	Res.	Res.	Res.	Res.

15	14	13	12	11	10	9	8	7	6	5	4	3	2	1	0
Res.	Res.	Res.	Res.	Res.	Res.	Res.	Res.	Res.	Res.	Res.	Res.	Res.	Res.	Res.	BLEEN
															rw

Bits 31:1 Reserved, must be kept at reset value.

Bit 0 **BLEEN:** CPU2 BLE interface clock enable
Set and cleared by software.
0: BLE clock disable for CPU2
1: BLE clock enable for CPU2

8.4.40 RCC CPU2 AHB1 peripheral clocks enable in Sleep modes register (RCC_C2AHB1SMENR)

Address offset: 0x168

Reset value: 0x0001 1007

Access: No wait state, word, half-word and byte access

31	30	29	28	27	26	25	24	23	22	21	20	19	18	17	16
Res.	Res.	Res.	Res.	Res.	Res.	Res.	Res.	Res.	Res.	Res.	Res.	Res.	Res.	Res.	TSC SMEN
15	14	13	12	11	10	9	8	7	6	5	4	3	2	1	0
Res.	Res.	Res.	CRC SMEN	Res.	Res.	SRAM1 SMEN	Res.	Res.	Res.	Res.	Res.	Res.	DMAMUX1 SMEN	Res.	DMA1 SMEN
			rw			rw							rw		rw

Bits 31:17 Reserved, must be kept at reset value.

Bit 16 **TSCSMEN:** Touch sensing controller clock enable during CPU2 CSleep mode
Set and cleared by software.
0: TSC clock disabled by the clock gating during CPU2 CSleep and CStop modes
1: TSC clock enabled by the clock gating during CPU2 CSleep mode, disabled during CPU2 CStop mode

Bits 15:13 Reserved, must be kept at reset value.

Bit 12 **CRCSMEN:** CRC clock enable during CPU2 CSleep mode
Set and cleared by software.
0: CRC clock disabled by the clock gating during CPU2 CSleep and CStop modes
1: CRC clock enabled by the clock gating during CPU2 CSleep mode, disabled during CPU2 CStop mode

Bits 11:10 Reserved, must be kept at reset value.

Bit 9 **SRAM1SMEN**: SRAM1 interface clock enabled during CPU2 CSleep mode
Set and cleared by software
0: SRAM1 interface clock disabled by the clock gating during CPU2 CSleep and CStop modes
1: SRAM1 interface clock enabled by the clock gating during CPU2 CSleep mode, disabled during CStop mode

Bits 8:3 Reserved, must be kept at reset value.

Bit 2 **DMAMUX1SMEN:** DMAMUX1 clock enable during CPU2 CSleep mode
Set and cleared by software during Sleep mode.
0: DMAMUX1 clock disabled by the clock gating during CPU2 CSleep and CStop modes
1: DMAMUX1 clock enabled by the clock gating during CPU2 CSleep mode, disabled during CPU2 CStop mode

Bit 1 Reserved, must be kept at reset value.

Bit 0 **DMA1SMEN:** DMA1 clock enable during CPU2 CSleep mode
Set and cleared by software.
0: DMA1 clock disabled by the clock gating during CPU2 CSleep and CStop modes
1: DMA1 clock enabled by the clock gating during CPU2 CSleep mode, disabled during CPU2 CStop mode

8.4.41 RCC CPU2 AHB2 peripheral clocks enable in Sleep modes register (RCC_C2AHB2SMENR)

Address offset: 0x16C

Reset value: 0x0001 009F

Access: No wait state, word, half-word and byte access

31	30	29	28	27	26	25	24	23	22	21	20	19	18	17	16
Res.	Res.	Res.	Res.	Res.	Res.	Res.	Res.	Res.	Res.	Res.	Res.	Res.	Res.	Res.	Res.
15	14	13	12	11	10	9	8	7	6	5	4	3	2	1	0
Res.	Res.	Res.	Res.	Res.	Res.	Res.	Res.	GPIOH SMEN	Res.	Res.	GPIOE SMEN	Res.	GPIOC SMEN	GPIOB SMEN	GPIOA SMEN
								rw			rw		rw	rw	rw

Bits 31:8 Reserved, must be kept at reset value.

Bit 7 **GPIOHSMEN:** IO port H clock enable during CPU2 CSleep mode
Set and cleared by software.
0: IO port H clock disabled by the clock gating during CPU2 CSleep and CStop modes
1: IO port H clock enabled by the clock gating during CPU2 CSleep mode, disabled during CPU2 CStop mode

Bits 6:5 Reserved, must be kept at reset value.

Bit 4 **GPIOESMEN:** IO port E clock enable during CPU2 CSleep mode
Set and cleared by software.
0: IO port E clock disabled by the clock gating during CPU2 CSleep and CStop modes
1: IO port E clock enabled by the clock gating during CPU2 CSleep mode, disabled during CPU2 CStop mode

Bit 3 Reserved, must be kept at reset value.

Bit 2 **GPIOCSMEN:** IO port C clock enable during CPU2 CSleep mode
Set and cleared by software.
0: IO port C clock disabled by the clock gating during CPU2 CSleep and CStop modes
1: IO port C clock enabled by the clock gating during CPU2 CSleep mode, disabled during CPU2 CStop mode

Bit 1 **GPIOBSMEN:** IO port B clock enable during CPU2 CSleep mode
Set and cleared by software.
0: IO port B clock disabled by the clock gating during CPU2 CSleep and CStop modes
1: IO port B clock enabled by the clock gating during CPU2 CSleep mode, disabled during CPU2 CStop mode

Bit 0 **GPIOASMEN:** IO port A clock enable during CPU2 CSleep mode
Set and cleared by software.
0: IO port A clock disabled by the clock gating during CPU2 CSleep and CStop modes
1: IO port A clock enabled by the clock gating during CPU2 CSleep mode, disabled during CPU2 CStop mode

8.4.42 RCC CPU2 AHB4 peripheral clocks enable in Sleep mode register (RCC_C2AHB4SMENR)

Address offset: 0x170

Reset value: 0x0307 0000

Access: No wait state, word, half-word and byte access

31	30	29	28	27	26	25	24	23	22	21	20	19	18	17	16
Res.	Res.	Res.	Res.	Res.	Res.	FLASH SMEN	SRAM2 SMEN	Res.	Res.	Res.	Res.	Res.	RNG SMEN	AES2 SMEN	PKA SMEN
						rw	rw						rw	rw	rw

15	14	13	12	11	10	9	8	7	6	5	4	3	2	1	0
Res.	Res.	Res.	Res.	Res.	Res.	Res.	Res.	Res.	Res.	Res.	Res.	Res.	Res.	Res.	Res.

Bits 31:26 Reserved, must be kept at reset value.

Bit 25 **FLASHSMEN** Flash memory interface clock enable during CPU2 CSleep mode
Set and cleared by software.
0: Flash memory interface clock disabled by the clock gating during CPU2 CSleep and CStop modes.
1: Flash memory interface clock enabled by the clock gating during CPU2 CSleep mode, disabled during CPU2 CStop mode.

Bit 24 **SRAM2SMEN:** SRAM2a and SRAM2b interface clock enable during CPU2 CSleep mode
Set and cleared by software.
0: SRAM2 clock disabled by the clock gating during CPU2 CSleep and CStop modes
1: SRAM2 clock enabled by the clock gating during CPU2 CSleep mode, disabled during CPU2 CStop mode

Bits 23:19 Reserved, must be kept at reset value.

Bit 18 **RNGSMEN** True RNG clock enable during CPU2 CSleep and CStop mode
Set and cleared by software.
0: True RNG bus clock disabled by the clock gating during CPU2 CSleep and CStop modes
1: True RNG bus clock enabled by the clock gating during CPU2 CSleep mode, disabled during CPU2 CStop mode

Bit 17 **AES2SMEN** AES2 accelerator clock enable during CPU2 CSleep mode
Set and cleared by software.
0: AES2 clock disabled by the clock gating during CPU2 CSleep and CStop modes
1: AES2 clock enabled by the clock gating during CPU2 CSleep mode, disabled during CPU2 CStop mode

Bit 16 **PKASMEN:** PKA accelerator clock enable during CPU2 CSleep mode
Set and cleared by software.
0: PKA clock disabled by the clock gating during CPU2 CSleep and CStop modes
1: PKA clock enabled by the clock gating during CPU2 CSleep mode, disabled during CPU2 CStop mode

Bits 15:0 Reserved, must be kept at reset value.

8.4.43 RCC CPU2 APB1 peripheral clocks enable in Sleep mode register 1 (RCC_C2APB1SMENR1)

Address: 0x178

Reset value: 0x85A0 4601

Access: No wait state, word, half-word and byte access

31	30	29	28	27	26	25	24	23	22	21	20	19	18	17	16
LPTIM1 SMEN	Res.	Res.	Res.	Res.	Res.	Res.	Res.	Res.	Res.	I2C1 SMEN	Res.	Res.	Res.	Res.	Res.
rw										rw					

15	14	13	12	11	10	9	8	7	6	5	4	3	2	1	0
Res.	Res.	Res.	Res.	Res.	RTCAPB SMEN	Res.	Res.	Res.	Res.	Res.	Res.	Res.	Res.	Res.	TIM2 SMEN
					rw										rw

Bit 31 **LPTIM1SMEN:** Low power timer 1 clock enable during CPU2 CSleep and CStop mode
Set and cleared by software.
0: LPTIM1 bus clock disabled by the clock gating during CPU2 CSleep and CStop modes
1: LPTIM1 bus clock enabled by the clock gating during CPU2 CSleep mode, disabled during CPU2 CStop mode

Bits 30:22 Reserved, must be kept at reset value.

Bit 21 **I2C1SMEN:** I2C1 clock enable during CPU2 CSleep and CStop modes
Set and cleared by software.
0: I2C1 bus clock disabled by the clock gating during CPU2 CSleep and CStop modes
1: I2C1 bus clock enabled by the clock gating during CPU2 CSleep modes disabled during CPU2 CStop mode

Bits 20:11 Reserved, must be kept at reset value.

Bit 10 **RTCAPBSMEN:** RTC bus clock enable during CPU2 CSleep mode
Set and cleared by software
0: RTC bus clock disabled during by the clock gating during CPU2 CSleep and CStop modes
1: RTC bus clock enabled during by the clock gating during CPU2 CSleep mode, disabled during CPU2 CStop mode

Bits 9:1 Reserved, must be kept at reset value.

Bit 0 **TIM2SMEN:** TIM2 timer clock enable during CPU2 CSleep mode
Set and cleared by software.
0: TIM2 clock disabled by the clock gating during CPU2 CSleep and CStop modes
1: TIM2 clock enabled by the clock gating during CPU2 CSleep mode, disabled during CPU2 CStop mode

8.4.44 RCC CPU2 APB1 peripheral clocks enable in Sleep mode register 2 (RCC_C2APB1SMENR2)

Address offset: 0x17C

Reset value: 0x0000 0021

Access: No wait state, word, half-word and byte access

31	30	29	28	27	26	25	24	23	22	21	20	19	18	17	16
Res.	Res.	Res.	Res.	Res.	Res.	Res.	Res.	Res.	Res.	Res.	Res.	Res.	Res.	Res.	Res.

15	14	13	12	11	10	9	8	7	6	5	4	3	2	1	0
Res.	Res.	Res.	Res.	Res.	Res.	Res.	Res.	Res.	Res.	LPTIM2 SMEN	Res.	Res.	Res.	Res.	LPUART1 SMEN
										rw					rw

Bits 31:6 Reserved, must be kept at reset value.

Bit 5 **LPTIM2SMEN** Low power timer 2 clock enable during CPU2 CSleep and CStop modes.
Set and cleared by software.
0: LPTIM2 bus clock disabled by the clock gating during CPU2 CSleep and CStop modes.
1: LPTIM2 bus clock enabled by the clock gating during CPU2 CSleep mode, disabled during CPU2 CStop mode.

Bits 4:1 Reserved, must be kept at reset value.

Bit 0 **LPUART1SMEN:** Low power UART 1 clock enable during CPU2 CSleep and CStop mode
Set and cleared by software.
0: LPUART1 bus clock disabled by the clock gating during CPU2 CSleep and CStop modes.
1: LPUART1 bus clock enabled by the clock gating during CPU2 CSleep mode, disabled during CPU2 CStop mode.

8.4.45 RCC CPU2 APB2 peripheral clocks enable in Sleep mode register (RCC_C2APB2SMENR)

Address: 0x180

Reset value: 0x0026 5A00

Access: word, half-word and byte access

31	30	29	28	27	26	25	24	23	22	21	20	19	18	17	16
Res.	Res.	Res.	Res.	Res.	Res.	Res.	Res.	Res.	Res.		Res.	Res.	Res.	Res.	Res.

15	14	13	12	11	10	9	8	7	6	5	4	3	2	1	0
Res.	USART1 SMEN	Res.	SPI1 SMEN	TIM1SM EN	Res.	ADC SMEN	Res.	Res.	Res.	Res.	Res.	Res.	Res.	Res.	Res.
	rw		rw	rw		rw									

Bits 31:15 Reserved, must be kept at reset value.

Bit 14 **USART1SMEN:** USART1 clock enable during CPU2 CSleep and CStop mode
Set and cleared by software.
0: USART1 bus clock disabled by the clock gating during CPU2 CSleep and CStop modes
1: USART1 bus clock enabled by the clock gating during CPU2 CSleep mode, disabled during CPU2 CStop mode

Bit 13 Reserved, must be kept at reset value.

Bit 12 **SPI1SMEN:** SPI1 clock enable during CPU2 CSleep mode
Set and cleared by software.
0: SPI1 clock disabled by the clock gating during CPU2 CSleep and CStop modes
1: SPI1 clock enabled by the clock gating during CPU2 CSleep mode, disabled during CPU2 CStop mode

Bit 11 **TIM1SMEN:** TIM1 timer clock enable during CPU2 CSleep mode
Set and cleared by software.
0: TIM1 timer clock disabled by the clock gating during CPU2 CSleep and CStop modes
1: TIM1 timer clock enabled by the clock gating during CPU2 CSleep mode, disabled during CPU2 CStop mode

Bit 10 Reserved, must be kept at reset value.

Bit 9 **ADCMEN:** ADC clock enable during CPU2 CSleep mode
Set and cleared by software.
0: ADC bus disabled by the clock gating during CPU2 CSleep and CStop modes
1: ADC bus enabled by the clock gating during CPU2 CSleep mode, disabled during CPU2 CStop mode

Bits 8:0 Reserved, must be kept at reset value.

8.4.46 RCC CPU2 APB3 peripheral clock enable in Sleep mode register (RCC_C2APB3SMENR)

Address offset: 0x184

Reset value: 0x00000 0003

Access: word, half-word and byte access

31	30	29	28	27	26	25	24	23	22	21	20	19	18	17	16
Res.	Res.	Res.	Res.	Res.	Res.	Res.	Res.	Res.	Res.	Res.	Res.	Res.	Res.	Res.	Res.
15	**14**	**13**	**12**	**11**	**10**	**9**	**8**	**7**	**6**	**5**	**4**	**3**	**2**	**1**	**0**
Res.	Res.	Res.	Res.	Res.	Res.	Res.	Res.	Res.	Res.	Res.	Res.	Res.	Res.	Res.	BLESMEN
															rw

Bits 31:1 Reserved, must be kept at reset value.

Bit 0 **BLESMEN:** BLE interface bus clock enable during CPU2 CSleep mode
Set and cleared by software.
0: BLE bus clock disabled by the clock gating during CPU2 CSleep and CStop modes
1: BLE bus clock enabled by the clock gating during CPU2 CSleep mode, disabled during CPU2 CStop mode

Note: The BLE interface bus clock is also enabled by the BLE IP itself.

8.4.47 RCC register map

The following table gives the RCC register map and the reset values.

Table 40. RCC register map and reset values

Offset	Register	31	30	29	28	27	26	25	24	23	22	21	20	19	18	17	16	15	14	13	12	11	10	9	8	7	6	5	4	3	2	1	0
0x000	RCC_CR	Res.	Res.	Res.	Res.	Res.	Res.	PLLRDY	PLLON	Res.	Res.	Res.	HSEPRE	CSSON	Res.	HSERDY	HSEON	Res.	Res.	Res.	HSIKERDY	HSIASFS	HSIRDY	HSIKERON	HSION	MSIRANGE [3:0]				Res.	MSIPLLEN	MSIRDY	MSION
	Reset value							0	0				0	0		0	0				0	0	0	0	0	0	1	1	0		0	0	1
0x004	RCC_ICSCR	Res.	HSITRIM[6:0]							HSICAL[7:0]								MSITRIM[7:0]								MSICAL[7:0]							
	Reset value		1	0	0	0	0	0	0	x	x	x	x	x	x	x	x	0	0	0	0	0	0	0	0	x	x	x	x	x	x	x	x
0x008	RCC_CFGR	Res.	MCOPRE [2:0]			MCOSEL[3:0]				Res.	Res.	Res.	Res.	Res.	PPRE2F	PPRE1F	HPREF	STOPWUCK	Res.	PPRE2 [2:0]			PPRE1 [2:0]			HPRE[3:0]				SWS [1:0]		SW [1:0]	
	Reset value		0	0	0	0	0	0	0						1	1	1	0		0	0	0	0	0	0	0	0	0	0	0	0	0	0
0x00C	RCC_PLLCFGR	PLLR[2:0]			PLLREN	PLLQ[2:0]			PLLQEN	Res.	Res.	PLLP[4:0]					PLLPEN	Res.	PLLN[6:0]							Res.	PLLM[2:0]			Res.	Res.	PLLSRC [1:0]	
	Reset value	0	0	1	0	0	0	1	0			0	0	0	1	0	0		0	0	0	0	0	0	1		0	0	0			0	0
0x010	Reserved	Res.	Res.	Res.	Res.	Res.	Res.	Res.	Res.	Res.	Res.	Res.	Res.	Res.	Res.	Res.	Res.	Res.	Res.	Res.	Res.	Res.	Res.	Res.	Res.	Res.	Res.	Res.	Res.	Res.	Res.	Res.	Res.
0x018	RCC_CIER	Res.	Res.	Res.	Res.	Res.	Res.	Res.	Res.	Res.	Res.	Res.	Res.	Res.	Res.	Res.	Res.	Res.	Res.	Res.	Res.	LSI2RDYIE	Res.	LSECSSIE	Res.	Res.	Res.	PLLRDYIE	HSERDYIE	HSIRDYIE	MSIRDYIE	LSERDYIE	LSI1RDYIE
	Reset value																					0		0				0	0	0	0	0	0
0x01C	RCC_CIFR	Res.	Res.	Res.	Res.	Res.	Res.	Res.	Res.	Res.	Res.	Res.	Res.	Res.	Res.	Res.	Res.	Res.	Res.	Res.	Res.	LSI2RDYF	Res.	LSECSSF	CSSF	Res.	Res.	PLLRDYF	HSERDYF	HSIRDYF	MSIRDYF	LSERDYF	LSI1RDYF
	Reset value																					0		0	0			0	0	0	0	0	0
0x020	RCC_CICR	Res.	Res.	Res.	Res.	Res.	Res.	Res.	Res.	Res.	Res.	Res.	Res.	Res.	Res.	Res.	Res.	Res.	Res.	Res.	Res.	LSI2RDYC	Res.	LSECSSC	CSSC	Res.	Res.	PLLRDYC	HSERDYC	HSIRDYC	MSIRDYC	LSERDYC	LSI1RDYC
	Reset value																					0		0	0			0	0	0	0	0	0
0x024	RCC_SMPSCR	Res.	Res.	Res.	Res.	Res.	Res.	Res.	Res.	Res.	Res.	Res.	Res.	Res.	Res.	Res.	Res.	Res.	Res.	Res.	Res.	Res.	Res.	SMPSSWS [1:0]		Res.	Res.	SMPSDIV [1:0]		Res.	Res.	SMPSSEL [1:0]	
	Reset value																							1	1			0	0			0	0
0x028	RCC_AHB1RSTR	Res.	Res.	Res.	Res.	Res.	Res.	Res.	Res.	Res.	Res.	Res.	Res.	Res.	Res.	Res.	TSCRST	Res.	Res.	Res.	CRCRST	Res.	Res.	Res.	Res.	Res.	Res.	Res.	Res.	Res.	DMAMUX1RST	Res.	DMA1RST
	Reset value																0				0										0		0
0x02C	RCC_AHB2RSTR	Res.	Res.	Res.	Res.	Res.	Res.	Res.	Res.	Res.	Res.	Res.	Res.	Res.	Res.	Res.	Res.	Res.	Res.	Res.	Res.	Res.	Res.	Res.	Res.	GPIOHRST	Res.	Res.	GPIOERST	Res.	GPIOCRST	GPIOBRST	GPIOARST
	Reset value																									0			0		0	0	0

Table 40. RCC register map and reset values (continued)

Offset	Register	31	30	29	28	27	26	25	24	23	22	21	20	19	18	17	16	15	14	13	12	11	10	9	8	7	6	5	4	3	2	1	0
0x030	RCC_AHB4RSTR	Res.	Res.	Res.	Res.	Res.	Res.	FLASHRST	Res.	Res.	Res.	Res.	IPCCRST	HSEMRST	RNGRST	AES2RST	PKARST	Res.	Res.	Res.	Res.	Res.	Res.	Res.	Res.	Res.	Res.	Res.	Res.	Res.	Res.	Res.	Res.
	Reset value							0					0	0	0	0	0																
0x034	Reserved	Res.	Res.	Res.	Res.	Res.	Res.	Res.	Res.	Res.	Res.	Res.	Res.	Res.	Res.	Res.	Res.	Res.	Res.	Res.	Res.	Res.	Res.	Res.	Res.	Res.	Res.	Res.	Res.	Res.	Res.	Res.	Res.
0x038	RCC_ APB1RSTR1	LPTIM1RST	Res.	Res.	Res.	Res.	Res.	Res.	Res.	Res.	Res.	I2C1RST	Res.	Res.	Res.	Res.	Res.	Res.	Res.	Res.	Res.	Res.	Res.	Res.	Res.	Res.	Res.	Res.	Res.	Res.	Res.	Res.	TIM2RST
	Reset value	0										0																					0
0x03C	RCC_ APB1RSTR2	Res.	Res.	Res.	Res.	Res.	Res.	Res.	Res.	Res.	Res.	Res.	Res.	Res.	Res.	Res.	Res.	Res.	Res.	Res.	Res.	Res.	Res.	Res.	Res.	Res.	Res.	LPTIM2RST	Res.	Res.	Res.	Res.	LPUART1RST
	Reset value																											0					0
0x040	RCC_ APB2RSTR	Res.	Res.	Res.	Res.	Res.	Res.	Res.	Res.	Res.	Res.	Res.	Res.	Res.	Res.	Res.	Res.	Res.	USART1RST	Res.	SPI1RST	TIM1RST	Res.	ADCRST	Res.	Res.	Res.	Res.	Res.	Res.	Res.	Res.	Res.
	Reset value																		0		0	0		0									
0x044	RCC_APB3RSTR	Res.	Res.	Res.	Res.	Res.	Res.	Res.	Res.	Res.	Res.	Res.	Res.	Res.	Res.	Res.	Res.	Res.	Res.	Res.	Res.	Res.	Res.	Res.	Res.	Res.	Res.	Res.	Res.	Res.	Res.	Res.	RFRST
	Reset value																																0
0x048	RCC_AHB1ENR	Res.	Res.	Res.	Res.	Res.	Res.	Res.	Res.	Res.	Res.	Res.	Res.	Res.	Res.	Res.	TSCEN	Res.	Res.	Res.	CRCEN	Res.	Res.	Res.	Res.	Res.	Res.	Res.	Res.	Res.	DMAMUX1EN	Res.	DMA1EN
	Reset value																0				0										0		0
0x04C	RCC_AHB2ENR	Res.	Res.	Res.	Res.	Res.	Res.	Res.	Res.	Res.	Res.	Res.	Res.	Res.	Res.	Res.	Res.	Res.	Res.	Res.	Res.	Res.	Res.	Res.	Res.	GPIOHEN	Res.	Res.	GPIOEEN	Res.	GPIOCEN	GPIOBEN	GPIOAEN
	Reset value																									0			0		0	0	0
0x050	RCC_AHB4ENR	Res.	Res.	Res.	Res.	Res.	Res.	FLASHEN	Res.	Res.	Res.	Res.	IPCCEN	HSEMEN	RNGEN	AES2EN	PKAEN	Res.	Res.	Res.	Res.	Res.	Res.	Res.	Res.	Res.	Res.	Res.	Res.	Res.	Res.	Res.	Res.
	Reset value							1					0	1	0	0	0																
0x054	Reserved	Res.	Res.	Res.	Res.	Res.	Res.	Res.	Res.	Res.	Res.	Res.	Res.	Res.	Res.	Res.	Res.	Res.	Res.	Res.	Res.	Res.	Res.	Res.	Res.	Res.	Res.	Res.	Res.	Res.	Res.	Res.	Res.
0x058	RCC_APB1ENR1	LPTIM1EN	Res.	Res.	Res.	Res.	Res.	Res.	Res.	Res.	Res.	I2C1EN	Res.	Res.	Res.	Res.	Res.	Res.	Res.	Res.	Res.	WWDGEN	RTCAPBEN	Res.	Res.	Res.	Res.	Res.	Res.	Res.	Res.	Res.	TIM2EN
	Reset value	0										0										0	1										0
0x05C	RCC_APB1ENR2	Res.	Res.	Res.	Res.	Res.	Res.	Res.	Res.	Res.	Res.	Res.	Res.	Res.	Res.	Res.	Res.	Res.	Res.	Res.	Res.	Res.	Res.	Res.	Res.	Res.	Res.	LPTIM2EN	Res.	Res.	Res.	Res.	LPUART1EN
	Reset value																											0					0

Table 40. RCC register map and reset values (continued)

Offset	Register	31	30	29	28	27	26	25	24	23	22	21	20	19	18	17	16	15	14	13	12	11	10	9	8	7	6	5	4	3	2	1	0
0x060	RCC_APB2ENR	Res.	Res.	Res.	Res.	Res.	Res.	Res.	Res.	Res.	Res.	Res.	Res.	Res.	Res.	Res.	Res.	Res.	USART1EN	Res.	SPI1EN	TIM1EN	Res.	ADCEN	Res.	Res.	Res.	Res.	Res.	Res.	Res.	Res.	Res.
	Reset value																		0		0	0		0									
0x064	Reserved	Res.	Res.	Res.	Res.	Res.	Res.	Res.	Res.	Res.	Res.	Res.	Res.	Res.	Res.	Res.	Res.	Res.	Res.	Res.	Res.	Res.	Res.	Res.	Res.	Res.	Res.	Res.	Res.	Res.	Res.	Res.	Res.
0x068	RCC_ AHB1SMENR	Res.	Res.	Res.	Res.	Res.	Res.	Res.	Res.	Res.	Res.	Res.	Res.	Res.	Res.	Res.	TSCSMEN	Res.	Res.	Res.	CRCSMEN	Res.	Res.	SRAM1SMEN	Res.	Res.	Res.	Res.	Res.	Res.	DMAMUX1SMEN	Res.	DMA1SMEN
	Reset value																1				1			1							1		1
0x06C	RCC_ AHB2SMENR	Res.	Res.	Res.	Res.	Res.	Res.	Res.	Res.	Res.	Res.	Res.	Res.	Res.	Res.	Res.	Res.	Res.	Res.	Res.	Res.	Res.	Res.	Res.	Res.	GPIOHSMEN	Res.	Res.	GPIOESMEN	Res.	GPIOCSMEN	GPIOBSMEN	GPIOASMEN
	Reset value																									1			1		1	1	1
0x070	RCC _AHB4SMENR	Res.	Res.	Res.	Res.	Res.	Res.	FLASHSMEN	SRAM2SMEN	Res.	Res.	Res.	Res.	Res.	RNGSMEN	AES2SMEN	PKASMEN	Res.	Res.	Res.	Res.	Res.	Res.	Res.	Res.	Res.	Res.	Res.	Res.	Res.	Res.	Res.	Res.
	Reset value							1	1						1	1	1																
0x074	Reserved	Res.	Res.	Res.	Res.	Res.	Res.	Res.	Res.	Res.	Res.	Res.	Res.	Res.	Res.	Res.	Res.	Res.	Res.	Res.	Res.	Res.	Res.	Res.	Res.	Res.	Res.	Res.	Res.	Res.	Res.	Res.	Res.
0x078	RCC _APB1SMENR1	LPTIM1SMEN	Res.	Res.	Res.	Res.	Res.	Res.	Res.	Res.	Res.	I2C1SMEN	Res.	Res.	Res.	Res.	Res.	Res.	Res.	Res.	Res.	WWDGSMEN	RTCAPBSMEN	Res.	Res.	Res.	Res.	Res.	Res.	Res.	Res.	Res.	TIM2SMEN
	Reset value	1										1										1	1										1
0x07C	RCC _APB1SMENR2	Res.	Res.	Res.	Res.	Res.	Res.	Res.	Res.	Res.	Res.	Res.	Res.	Res.	Res.	Res.	Res.	Res.	Res.	Res.	Res.	Res.	Res.	Res.	Res.	Res.	Res.	LPTIM2SMEN	Res.	Res.	Res.	Res.	LPUART1SMEN
	Reset value																											1					1
0x080	RCC_ APB2SMENR	Res.	Res.	Res.	Res.	Res.	Res.	Res.	Res.	Res.	Res.	Res.	Res.	Res.	Res.	Res.	Res.	Res.	USART1SMEN	Res.	SPI1SMEN	TIM1SMEN	Res.	ADCSMEN	Res.	Res.	Res.	Res.	Res.	Res.	Res.	Res.	Res.
	Reset value																		1		1	1		1									
0x084	Reserved	Res.	Res.	Res.	Res.	Res.	Res.	Res.	Res.	Res.	Res.	Res.	Res.	Res.	Res.	Res.	Res.	Res.	Res.	Res.	Res.	Res.	Res.	Res.	Res.	Res.	Res.	Res.	Res.	Res.	Res.	Res.	Res.
0x088	RCC_CCIPR	RNGSEL [1:0]		ADCSEL [1:0]		CLK48SEL [1:0]		Res.	Res.	Res.	Res.	LPTIM2SEL [1:0]		LPTIM1SEL [1:0]		Res.	Res.	Res.	Res.	I2C1SEL [1:0]		LPUART1SEL [1:0]		Res.	Res.	Res.	Res.	Res.	Res.	Res.	Res.	USART1SEL [1:0]	
	Reset value	0	0	0	0	0	0					0	0	0	0					0	0	0	0									0	0
0x08C	Reserved	Res.	Res.	Res.	Res.	Res.	Res.	Res.	Res.	Res.	Res.	Res.	Res.	Res.	Res.	Res.	Res.	Res.	Res.	Res.	Res.	Res.	Res.	Res.	Res.	Res.	Res.	Res.	Res.	Res.	Res.	Res.	Res.

Table 40. RCC register map and reset values (continued)

Offset	Register	31	30	29	28	27	26	25	24	23	22	21	20	19	18	17	16	15	14	13	12	11	10	9	8	7	6	5	4	3	2	1	0
0x090	RCC_BDCR	Res.	Res.	Res.	Res.	Res.	Res.	LSCOSEL	LSCOEN	Res.	Res.	Res.	Res.	Res.	Res.	Res.	BDRST	RTCEN	Res.	Res.	Res.	Res.	Res.	RTCSEL [1:0]		Res.	LSECSSD	LSECSSON	LSEDRV [1:0]		LSEBYP	LSERDY	LSEON
	Reset value							0	0								0	0						0	0		0	0	0	0	0	0	0
0x094	RCC_CSR	LPWRRSTF	WWDGRSTF	IWDGRSTF	SFTRSTF	BORRSTF	PINRSTF	OBLRSTF	Res.	RMVF	Res.	Res.	Res.	Res.	Res.	Res.	RFRSTS	RFWKPSEL [1:0].		Res.	Res.	LSI2TRIM [3:0]				Res.	Res.	Res.	Res.	LSI2RDY	LSI2ON	LSI1RDY	LSI1ON
	Reset value	0	0	0	0	1	1	0		0							0	0	0			0	0	0	0					0	0	0	0
0x098	Reserved	Res.	Res.	Res.	Res.	Res.	Res.	Res.	Res.	Res.	Res.	Res.	Res.	Res.	Res.	Res.	Res.	Res.	Res.	Res.	Res.	Res.	Res.	Res.	Res.	Res.	Res.	Res.	Res.	Res.	Res.	Res.	Res.
0x09C	RCC_HSECR	Res.	Res.	Res.	Res.	Res.	Res.	Res.	Res.	Res.	Res.	Res.	Res.	Res.	Res.	Res.	Res.	Res.	Res.	HSETUNE[5:0]						Res.	HSEGMC [2:0]			HSES	Res.	Res.	UNLOCKED
	Reset value																			0	0	0	0	0	0	0	0	1	1	0	0	0	0
0x0A0 to 0x104	Reserved	Res.	Res.	Res.	Res.	Res.	Res.	Res.	Res.	Res.	Res.	Res.	Res.	Res.	Res.	Res.	Res.	Res.	Res.	Res.	Res.	Res.	Res.	Res.	Res.	Res.	Res.	Res.	Res.	Res.	Res.	Res.	Res.
0x108	RCC_EXTCFGR	Res.	Res.	Res.	Res.	Res.	Res.	Res.	Res.	Res.	Res.	Res.	RFCSS	Res.	Res.	C2HPREF	SHDHPREF	Res.	Res.	Res.	Res.	Res.	Res.	Res.	Res.	C2HPRE[3:0]				SHDHPRE [3:0]			
	Reset value												0			1	1									0	0	0	0	0	0	0	0
0x10C to 0x144	Reserved	Res.	Res.	Res.	Res.	Res.	Res.	Res.	Res.	Res.	Res.	Res.	Res.	Res.	Res.	Res.	Res.	Res.	Res.	Res.	Res.	Res.	Res.	Res.	Res.	Res.	Res.	Res.	Res.	Res.	Res.	Res.	Res.
0x148	RCC _C2AHB1ENR	Res.	Res.	Res.	Res.	Res.	Res.	Res.	Res.	Res.	Res.	Res.	Res.	Res.	Res.	Res.	TSCEN	Res.	Res.	Res.	CRCEN	Res.	Res.	SRAM1EN	Res.	Res.	Res.	Res.	Res.	Res.	DMAMUX1EN	Res.	DMA1EN
	Reset value																0				0			0							0		0
0x14C	RCC _C2AHB2ENR	Res.	Res.	Res.	Res.	Res.	Res.	Res.	Res.	Res.	Res.	Res.	Res.	Res.	Res.	Res.		Res.	Res.	Res.	Res.	Res.	Res.	Res.	Res.	GPIOHEN	Res.	Res.	GPIOEEN		GPIOCEN	GPIOBEN	GPIOAEN
	Reset value																									0			0		0	0	0
0x150	RCC _C2AHB4ENR	Res.	Res.	Res.	Res.	Res.	Res.	FLASHEN	Res.	Res.	Res.	Res.	IPCCEN	HSEMEN	RNGEN	AES2EN	PKAEN	Res.	Res.	Res.	Res.	Res.	Res.	Res.	Res.	Res.	Res.	Res.	Res.	Res.	Res.	Res.	Res.
	Reset value							1					0	1	0	0	0																
0x154	Reserved	Res.	Res.	Res.	Res.	Res.	Res.	Res.	Res.	Res.	Res.	Res.	Res.	Res.	Res.	Res.	Res.	Res.	Res.	Res.	Res.	Res.	Res.	Res.	Res.	Res.	Res.	Res.	Res.	Res.	Res.	Res.	Res.
0x158	RCC _C2APB1ENR1	LPTIM1EN	Res.	Res.	Res.	Res.	Res.	Res.	Res.	Res.	Res.	I2C1EN	Res.	Res.	Res.	Res.	Res.	Res.	Res.	Res.	Res.	Res.	RTCAPBEN	Res.	Res.	Res.	Res.	Res.	Res.	Res.	Res.	Res.	TIM2EN
	Reset value	0										0											1										0

Table 40. RCC register map and reset values (continued)

Offset	Register	31	30	29	28	27	26	25	24	23	22	21	20	19	18	17	16	15	14	13	12	11	10	9	8	7	6	5	4	3	2	1	0
0x15C	RCC _C2APB1ENR2	Res.	Res.	Res.	Res.	Res.	Res.	Res.	Res.	Res.	Res.	Res.	Res.	Res.	Res.	Res.	Res.	Res.	Res.	Res.	Res.	Res.	Res.	Res.	Res.	Res.	Res.	LPTIM2EN	Res.	Res.	Res.	Res.	
	Reset value																											0					
0x160	RCC _C2APB2ENR	Res.	Res.	Res.	Res.	Res.	Res.	Res.	Res.	Res.	Res.		Res.	Res.	Res.	Res.	Res.	Res.	USART1EN		SPI1EN	TIM1EN		ADCEN	Res.	Res.	Res.	Res.	Res.	Res.	Res.	Res.	Res.
	Reset value																		0		0	0		0									
0x164	RCC _C2APB3ENR	Res.	Res.	Res.	Res.	Res.	Res.	Res.	Res.	Res.	Res.	Res.	Res.	Res.	Res.	Res.	Res.	Res.	Res.	Res.	Res.	Res.	Res.	Res.	Res.	Res.	Res.	Res.	Res.	Res.	Res.	Res.	BLEEN
	Reset value																																0
0x168	RCC _C2AHB1SMENR	Res.	Res.	Res.	Res.	Res.	Res.	Res.	Res.	Res.	Res.	Res.	Res.	Res.	Res.	Res.	TSCSMEN	Res.	Res.	Res.	CRCSMEN	Res.	Res.	SRAM1SMEN	Res.	Res.	Res.	Res.	Res.	Res.	DMAMUX1SMEN	Res.	DMA1SMEN
	Reset value																1				1			0							1		1
0x16C	RCC _C2AHB2SMENR	Res.	Res.	Res.	Res.	Res.	Res.	Res.	Res.	Res.	Res.	Res.	Res.	Res.	Res.	Res.	Res.	Res.	Res.	Res.	Res.	Res.	Res.	Res.	Res.	GPIOHSMEN	Res.	Res.	GPIOESMEN	Res.	GPIOCSMEN	GPIOBSMEN	GPIOASMEN
	Reset value																									1			1		1	1	1
0x170	RCC _C2AHB34MENR	Res.	Res.	Res.	Res.	Res.	Res.	FLASHSMEN	SRAM2SMEN	Res.	Res.	Res.	Res.	Res.	RNGSMEN	AES2SMEN	PKASMEN	Res.	Res.	Res.	Res.	Res.	Res.	Res.	Res.	Res.	Res.	Res.	Res.	Res.	Res.	Res.	Res.
	Reset value							1	1						1	1	1																
0x174	Reserved	Res.	Res.	Res.	Res.	Res.	Res.	Res.	Res.	Res.	Res.	Res.	Res.	Res.	Res.	Res.	Res.	Res.	Res.	Res.	Res.	Res.	Res.	Res.	Res.	Res.	Res.	Res.	Res.	Res.	Res.	Res.	Res.
0x178	RCC_C2 APB1SMENR1	LPTIM1SMEN	Res.	Res.	Res.	Res.	Res.	Res.	Res.	Res.	Res.	I2C1SMEN	Res.	Res.	Res.	Res.	Res.	Res.	Res.	Res.	Res.	Res.	RTCAPBSMEN	Res.	Res.	Res.	Res.	Res.	Res.	Res.	Res.	Res.	TIM2SMEN
	Reset value	1										1											1										1
0x17C	RCC_C2 APB1SMENR2	Res.	Res.	Res.	Res.	Res.	Res.	Res.	Res.	Res.	Res.	Res.	Res.	Res.	Res.	Res.	Res.	Res.	Res.	Res.	Res.	Res.	Res.	Res.	Res.	Res.	Res.	LPTIM2SMEN	Res.	Res.	Res.	Res.	LPUART1SMEN
	Reset value																											1					1
0x180	RCC_C2 APB2SMENR	Res.	Res.	Res.	Res.	Res.	Res.	Res.	Res.	Res.	Res.	Res.	Res.	Res.	Res.	Res.	Res.	Res.	USART1SMEN	Res.	SPI1SMEN	TIM1SMEN	Res.	ADCSMEN	Res.	Res.	Res.	Res.	Res.	Res.	Res.	Res.	Res.
	Reset value																		1		1	1		1									

Table 40. RCC register map and reset values (continued)

Offset	Register	31	30	29	28	27	26	25	24	23	22	21	20	19	18	17	16	15	14	13	12	11	10	9	8	7	6	5	4	3	2	1	0
0x184	RCC_C2 APB3SMENR	Res.	Res.	Res.	Res.	Res.	Res.	Res.	Res.	Res.	Res.	Res.	Res.	Res.	Res.	Res.	Res.	Res.	Res.	Res.	Res.	Res.	Res.	Res.	Res.	Res.	Res.	Res.	Res.	Res.	Res.	Res.	BLESMEN
	Reset value																																1
0x188 to 03FC	Reserved	Res.	Res.	Res.	Res.	Res.	Res.	Res.	Res.	Res.	Res.	Res.	Res.	Res.	Res.	Res.	Res.	Res.	Res.	Res.	Res.	Res.	Res.	Res.	Res.	Res.	Res.	Res.	Res.	Res.	Res.	Res.	Res.

Refer to *Section 2.2 on page 55* for the register boundary addresses.

9 General-purpose I/Os (GPIO)

9.1 Introduction

Each general-purpose I/O port has four 32-bit configuration registers (GPIOx_MODER, GPIOx_OTYPER, GPIOx_OSPEEDR and GPIOx_PUPDR), two 32-bit data registers (GPIOx_IDR and GPIOx_ODR) and a 32-bit set/reset register (GPIOx_BSRR). In addition all GPIOs have a 32-bit locking register (GPIOx_LCKR) and two 32-bit alternate function selection registers (GPIOx_AFRH and GPIOx_AFRL).

9.2 GPIO main features

- Output states: push-pull or open drain + pull-up/down
- Output data from output data register (GPIOx_ODR) or peripheral (alternate function output)
- Speed selection for each I/O
- Input states: floating, pull-up/down, analog
- Input data to input data register (GPIOx_IDR) or peripheral (alternate function input)
- Bit set and reset register (GPIOx_ BSRR) for bitwise write access to GPIOx_ODR
- Locking mechanism (GPIOx_LCKR) provided to freeze the I/O port configurations
- Analog function
- Alternate function selection registers
- Fast toggle capable of changing every two clock cycles
- Highly flexible pin multiplexing allows the use of I/O pins as GPIOs or as one of several peripheral functions

9.3 GPIO functional description

Subject to the specific hardware characteristics of each I/O port listed in the datasheet, each port bit of the general-purpose I/O (GPIO) ports can be individually configured by software in several modes:

- Input floating
- Input pull-up
- Input-pull-down
- Analog
- Output open-drain with pull-up or pull-down capability
- Output push-pull with pull-up or pull-down capability
- Alternate function push-pull with pull-up or pull-down capability
- Alternate function open-drain with pull-up or pull-down capability

Each I/O port bit is freely programmable, however the I/O port registers have to be accessed as 32-bit words, half-words or bytes. The purpose of the GPIOx_BSRR register is to allow atomic read/modify accesses to any of the GPIOx_ODR registers. In this way, there is no risk of an IRQ occurring between the read and the modify access.

Figure 18 shows the basic structure of a Three-volt tolerant (TT) and Five-volt tolerant (FT) I/O port bit.

Figure 18. Three-volt or five-volt tolerant GPIO structure (TT or FT)

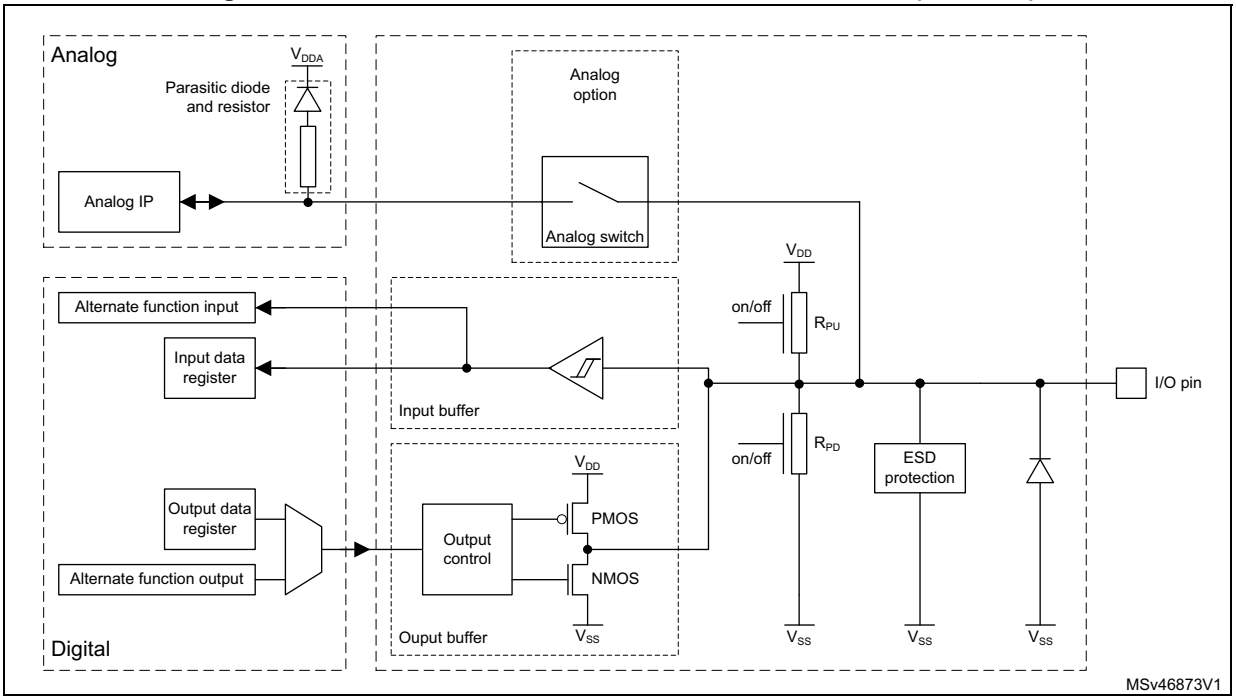

Note: The parasitic diode in the analog domain is connected to V_{DDA} and cannot be used as a protection diode.

The voltage level called V_{DD_FT} in some datasheets and reference manuals is inside the ESD protection block.

When the analog option is selected, the FT I/O is not five-volt tolerant anymore since the pin is supplied with V_{DDA}.

A TT or FT GPIO pin has no internal protection diode connected to supply (V_{DD}). There is no physical limitation against over-voltage. Therefore, for applications requiring a limited voltage threshold, it is recommended to connect an external diode to V_{DD}.

Table 41 gives the possible port bit configurations.

Table 41. Port bit configuration table[1]

MODE(i) [1:0]	OTYPER(i)	OSPEED(i) [1:0]		PUPD(i) [1:0]		I/O configuration	
01	0	SPEED [1:0]		0	0	GP output	PP
	0			0	1	GP output	PP + PU
	0			1	0	GP output	PP + PD
	0			1	1	Reserved	
	1			0	0	GP output	OD
	1			0	1	GP output	OD + PU
	1			1	0	GP output	OD + PD
	1			1	1	Reserved (GP output OD)	
10	0	SPEED [1:0]		0	0	AF	PP
	0			0	1	AF	PP + PU
	0			1	0	AF	PP + PD
	0			1	1	Reserved	
	1			0	0	AF	OD
	1			0	1	AF	OD + PU
	1			1	0	AF	OD + PD
	1			1	1	Reserved	
00	x	x	x	0	0	Input	Floating
	x	x	x	0	1	Input	PU
	x	x	x	1	0	Input	PD
	x	x	x	1	1	Reserved (input floating)	
11	x	x	x	0	0	Input/output	Analog
	x	x	x	0	1	Reserved	
	x	x	x	1	0		
	x	x	x	1	1		

1. GP = general-purpose, PP = push-pull, PU = pull-up, PD = pull-down, OD = open-drain, AF = alternate function.

9.3.1 General-purpose I/O (GPIO)

During and just after reset, the alternate functions are not active and most of the I/O ports are configured in analog mode.

The debug pins are in AF pull-up/pull-down after reset:

- PA15: JTDI in input mode with pull-up
- PA14: JTCK/SWCLK in input mode with pull-down
- PA13: JTMS/SWDAT in input mode with pull-up
- PB4: NJTRST in input mode with pull-up
- PB3: JTDO in Hi-Z mode no pulls

PH3/BOOT0 is in input mode during the reset until at least the end of the option byte loading phase. See *Section 9.3.15: Using PH3 as GPIO*.

When the pin is configured as output, the value written to the output data register (GPIOx_ODR) is output on the I/O pin. It is possible to use the output driver in push-pull mode or open-drain mode (only the low level is driven, high level is HI-Z).

The input data register (GPIOx_IDR) captures the data present on the I/O pin at every AHB clock cycle.

All GPIO pins have weak internal pull-up and pull-down resistors, which can be activated or not depending on the value in the GPIOx_PUPDR register.

Note: The PB5 pin is configured as input with pull up active under reset if the NRST pin is configured in reset input/output mode.

9.3.2 I/O pin alternate function multiplexer and mapping

The device I/O pins are connected to on-board peripherals/modules through a multiplexer that allows only one peripheral alternate function (AF) connected to an I/O pin at a time. In this way, there can be no conflict between peripherals available on the same I/O pin.

Each I/O pin has a multiplexer with up to sixteen alternate function inputs (AF0 to AF15) that can be configured through the GPIOx_AFRL (for pin 0 to 7) and GPIOx_AFRH (for pin 8 to 15) registers:

- After reset the multiplexer selection is alternate function 0 (AF0). The I/Os are configured in alternate function mode through GPIOx_MODER register.
- The specific alternate function assignments for each pin are detailed in the device datasheet.

In addition to this flexible I/O multiplexing architecture, each peripheral has alternate functions mapped onto different I/O pins to optimize the number of peripherals available in smaller packages.

To use an I/O in a given configuration, the user has to proceed as follows:

- **Debug function:** after each device reset these pins are assigned as alternate function pins immediately usable by the debugger host
- **GPIO:** configure the desired I/O as output, input or analog in the GPIOx_MODER register.
- **Peripheral alternate function:**
  - Connect the I/O to the desired AFx in one of the GPIOx_AFRL or GPIOx_AFRH register.

  - Select the type, pull-up/pull-down and output speed via the GPIOx_OTYPER, GPIOx_PUPDR and GPIOx_OSPEEDER registers, respectively.
  - Configure the desired I/O as an alternate function in the GPIOx_MODER register.
- **Additional functions:**
  - For the ADC, PVD and COMP, configure the desired I/O in analog mode in the GPIOx_MODER register and configure the required function in the ADC and COMP registers.
  - For the additional functions like RTC, WKUPx and oscillators, configure the required function in the related RTC, PWR and RCC registers. These functions have priority over the configuration in the standard GPIO registers.

Refer to the “Alternate function mapping” table in the device datasheet for the detailed mapping of the alternate function I/O pins.

9.3.3 I/O port control registers

Each of the GPIO ports has four 32-bit memory-mapped control registers (GPIOx_MODER, GPIOx_OTYPER, GPIOx_OSPEEDR, GPIOx_PUPDR) to configure up to 16 I/Os. The GPIOx_MODER register is used to select the I/O mode (input, output, AF, analog). The GPIOx_OTYPER and GPIOx_OSPEEDR registers are used to select the output type (push-pull or open-drain) and speed. The GPIOx_PUPDR register is used to select the pull-up/pull-down whatever the I/O direction.

9.3.4 I/O port data registers

Each GPIO has two 16-bit memory-mapped data registers: input and output data registers (GPIOx_IDR and GPIOx_ODR). GPIOx_ODR stores the data to be output, it is read/write accessible. The data input through the I/O are stored into the input data register (GPIOx_IDR), a read-only register.

See *Section 9.4.5* and *Section 9.4.6* for the register descriptions.

9.3.5 I/O data bitwise handling

The bit set reset register (GPIOx_BSRR) is a 32-bit register which allows the application to set and reset each individual bit in the output data register (GPIOx_ODR). The bit set reset register has twice the size of GPIOx_ODR.

To each bit in GPIOx_ODR, correspond two control bits in GPIOx_BSRR: BS(i) and BR(i). When written to 1, bit BS(i) **sets** the corresponding ODR(i) bit. When written to 1, bit BR(i) **resets** the ODR(i) corresponding bit.

Writing any bit to 0 in GPIOx_BSRR does not have any effect on the corresponding bit in GPIOx_ODR. If there is an attempt to both set and reset a bit in GPIOx_BSRR, the set action takes priority.

Using the GPIOx_BSRR register to change the values of individual bits in GPIOx_ODR is a “one-shot” effect that does not lock the GPIOx_ODR bits. The GPIOx_ODR bits can always be accessed directly. The GPIOx_BSRR register provides a way of performing atomic bitwise handling.

There is no need for the software to disable interrupts when programming the GPIOx_ODR at bit level: it is possible to modify one or more bits in a single atomic AHB write access.

9.3.6 GPIO locking mechanism

It is possible to freeze the GPIO control registers by applying a specific write sequence to the GPIOx_LCKR register. The frozen registers are GPIOx_MODER, GPIOx_OTYPER, GPIOx_OSPEEDR, GPIOx_PUPDR, GPIOx_AFRL and GPIOx_AFRH.

To write the GPIOx_LCKR register, a specific write / read sequence has to be applied. When the right LOCK sequence is applied to bit 16 in this register, the value of LCKR[15:0] is used to lock the configuration of the I/Os (during the write sequence the LCKR[15:0] value must be the same). When the LOCK sequence has been applied to a port bit, the value of the port bit can no longer be modified until the next MCU reset or peripheral reset. Each GPIOx_LCKR bit freezes the corresponding bit in the control registers (GPIOx_MODER, GPIOx_OTYPER, GPIOx_OSPEEDR, GPIOx_PUPDR, GPIOx_AFRL and GPIOx_AFRH.

The LOCK sequence (refer to *Section 9.4.8*) can only be performed using a word (32-bit long) access to the GPIOx_LCKR register due to the fact that GPIOx_LCKR bit 16 has to be set at the same time as the [15:0] bits.

For more details refer to LCKR register description in *Section 9.4.8*.

9.3.7 I/O alternate function input/output

Two registers are provided to select one of the alternate function inputs/outputs available for each I/O. With these registers, the user can connect an alternate function to some other pin as required by the application.

This means that a number of possible peripheral functions are multiplexed on each GPIO using the GPIOx_AFRL and GPIOx_AFRH alternate function registers. The application can thus select any one of the possible functions for each I/O. The AF selection signal being common to the alternate function input and alternate function output, a single channel is selected for the alternate function input/output of a given I/O.

To know which functions are multiplexed on each GPIO pin refer to the device datasheet.

9.3.8 External interrupt/wakeup lines

All ports have external interrupt capability. To use external interrupt lines, the port must be configured in input mode.

Refer to *Section 14: Extended interrupt and event controller (EXTI)* and to *Section 14.3: EXTI functional description.*

9.3.9 Input configuration

When the I/O port is programmed as input:

- The output buffer is disabled
- The Schmitt trigger input is activated
- The pull-up and pull-down resistors are activated depending on the value in the GPIOx_PUPDR register
- The data present on the I/O pin are sampled into the input data register every AHB clock cycle
- A read access to the input data register provides the I/O state

Figure 19 shows the input configuration of the I/O port bit.

Figure 19. Input floating/pull up/pull down configurations

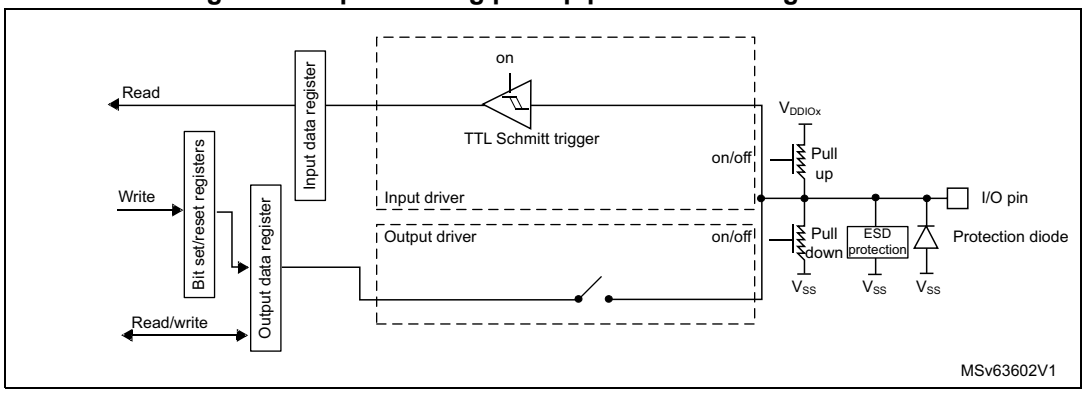

9.3.10 Output configuration

When the I/O port is programmed as output:

- The output buffer is enabled:
  - Open drain mode: A “0” in the Output register activates the N-MOS whereas a “1” in the Output register leaves the port in Hi-Z (the P-MOS is never activated)
  - Push-pull mode: A “0” in the Output register activates the N-MOS whereas a “1” in the Output register activates the P-MOS
- The Schmitt trigger input is activated
- The pull-up and pull-down resistors are activated depending on the value in the GPIOx_PUPDR register
- The data present on the I/O pin are sampled into the input data register every AHB clock cycle
- A read access to the input data register gets the I/O state
- A read access to the output data register gets the last written value

Figure 20 shows the output configuration of the I/O port bit.

Figure 20. Output configuration

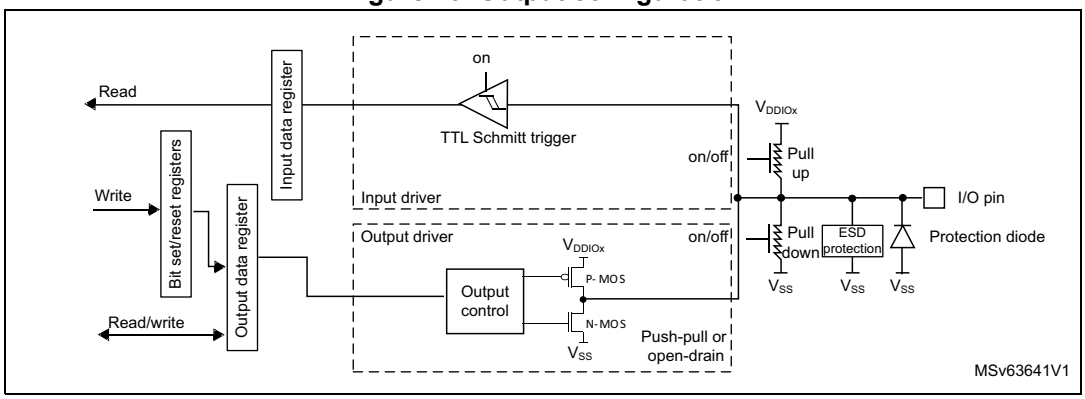

9.3.11 Alternate function configuration

When the I/O port is programmed as alternate function:

- The output buffer can be configured in open-drain or push-pull mode
- The output buffer is driven by the signals coming from the peripheral (transmitter enable and data)
- The Schmitt trigger input is activated
- The weak pull-up and pull-down resistors are activated or not depending on the value in the GPIOx_PUPDR register
- The data present on the I/O pin are sampled into the input data register every AHB clock cycle
- A read access to the input data register gets the I/O state

Note: The alternate function configuration described above is not applied when the selected alternate function is an LCD function. In this case, the I/O, programmed as an alternate function output, is configured as described in the analog configuration.

Figure 21 shows the Alternate function configuration of the I/O port bit.

Figure 21. Alternate function configuration

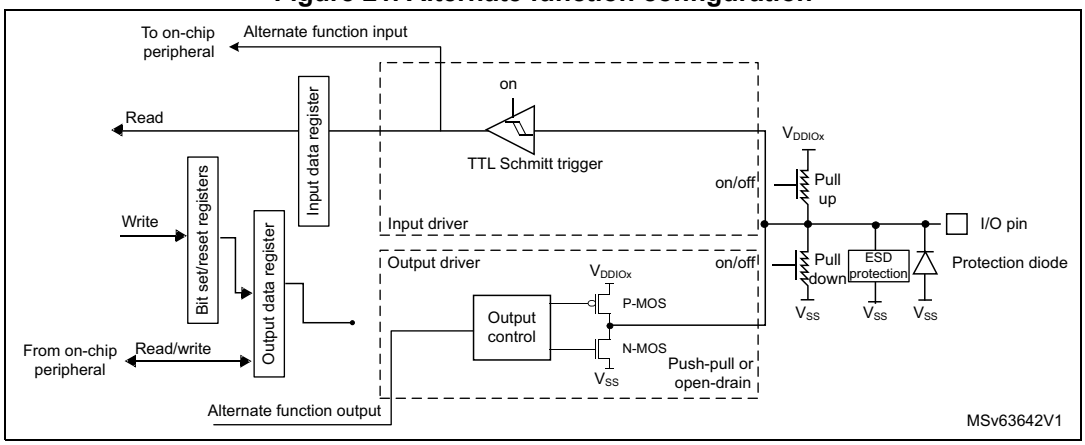

9.3.12 Analog configuration

When the I/O port is programmed as analog configuration:

- The output buffer is disabled
- The Schmitt trigger input is deactivated, providing zero consumption for every analog value of the I/O pin. The output of the Schmitt trigger is forced to a constant value (0).
- The weak pull-up and pull-down resistors are disabled by hardware
- Read access to the input data register gets the value “0”

Figure 22 shows the high-impedance, analog-input configuration of the I/O port bits.

Figure 22. High impedance-analog configuration

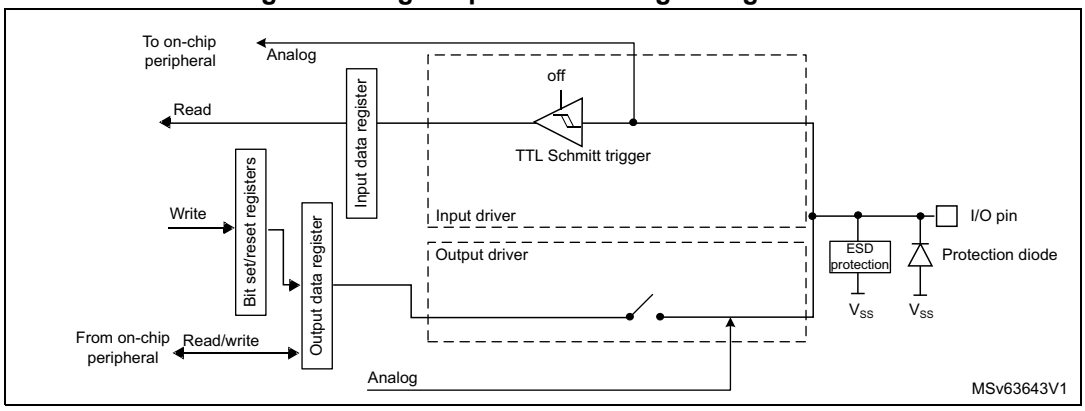

9.3.13 Using the LSE oscillator pins as GPIOs

When the LSE oscillator is switched OFF (default state after reset), the related oscillator pins can be used as normal GPIOs.

When the LSE oscillator is switched ON (by setting the LSEON bit in the RCC_CSR register) the oscillator takes control of its associated pins and the GPIO configuration of these pins has no effect.

When the oscillator is configured in a user external clock mode, only the OSC32_IN pin is reserved for clock input and the OSC32_OUT pin can still be used as normal GPIO.

Note: The HSE OSC_IN and OSC_OUT pins are dedicated oscillator pins and cannot be used as GPIO.

9.3.14 Using the GPIO pins in the RTC supply domain

The PC14/PC15 GPIO functionality is lost when the core supply domain is powered off (when the device enters Standby mode). In this case, if their GPIO configuration is not bypassed by the RTC configuration, these pins are set in an analog input mode.

For details about I/O control by the RTC, refer to *Section 24.3: RTC functional description*.

9.3.15 Using PH3 as GPIO

PH3 may be used as boot pin (BOOT0) or as a GPIO. Depending on the nSWBOOT0 bit in the user option byte, it switches from the input mode to the analog input mode:

- After the option byte loading phase if nSWBOOT0 = 1.
- After reset if nSWBOOT0 = 0.

9.4 GPIO registers

This section gives a detailed description of the GPIO registers.

For a summary of register bits, register address offsets and reset values, refer to *Table 42*.

The peripheral registers can be written in word, half word or byte mode.

9.4.1 GPIO port mode register (GPIOx_MODER) (x =A to C and E, H)

Address offset:0x00

Reset value: 0xABFF FFFF (for port A)

Reset value: 0xFFFF FEBF (for port B)

Reset value: 0xF000 000C for port C

Reset value: 0x0000 0300 for port E

Reset value: 0x0000 00C0 for port H

Port B[31:24, 21:20] are reserved

Port C[27:4, 1:0] are reserved

Port E[31:10, 7:0] are reserved

Port H[31:8, 5:0] are reserved

31	30	29	28	27	26	25	24	23	22	21	20	19	18	17	16
MODE15[1:0]		MODE14[1:0]		MODE13[1:0]		MODE12[1:0]		MODE11[1:0]		MODE10[1:0]		MODE9[1:0]		MODE8[1:0]	
rw	rw	rw	rw	rw	rw	rw	rw	rw	rw	rw	rw	rw	rw	rw	rw
15	14	13	12	11	10	9	8	7	6	5	4	3	2	1	0
MODE7[1:0]		MODE6[1:0]		MODE5[1:0]		MODE4[1:0]		MODE3[1:0]		MODE2[1:0]		MODE1[1:0]		MODE0[1:0]	
rw	rw	rw	rw	rw	rw	rw	rw	rw	rw	rw	rw	rw	rw	rw	rw

Bits 31:0 **MODE[15:0][1:0]:** Port x configuration I/O pin y (y = 15 to 0)
These bits are written by software to configure the I/O mode.
00: Input mode
01: General purpose output mode
10: Alternate function mode
11: Analog mode (reset state)

9.4.2 GPIO port output type register (GPIOx_OTYPER) (x = A to C and E, H)

Address offset: 0x04

Reset value: 0x0000 0000

Port B[31:12, 10] are reserved

Port C[31:16, 13:2, 0] are reserved

Port E[31:5, 3:0] are reserved

Port H[31:4, 2:0] are reserved

31	30	29	28	27	26	25	24	23	22	21	20	19	18	17	16
Res.	Res.	Res.	Res.	Res.	Res.	Res.	Res.	Res.	Res.	Res.	Res.	Res.	Res.	Res.	Res.

15	14	13	12	11	10	9	8	7	6	5	4	3	2	1	0
OT15	OT14	OT13	OT12	OT11	OT10	OT9	OT8	OT7	OT6	OT5	OT4	OT3	OT2	OT1	OT0
rw	rw	rw	rw	rw	rw	rw	rw	rw	rw	rw	rw	rw	rw	rw	rw

Bits 31:16 Reserved, must be kept at reset value.

Bits 15:0 **OT[15:0]:** Port x configuration I/O pin y (y = 15 to 0)
These bits are written by software to configure the I/O output type.
0: Output push-pull (reset state)
1: Output open-drain

9.4.3 GPIO port output speed register (GPIOx_OSPEEDR) (x = A to C and E, H)

Address offset: 0x08

Reset value: 0x0C00 0000 (for port A)

Reset value: 0x0000 00C0 (for port B)

Reset value: 0x0000 0000 (for other ports)

Port B[31:24, 21:20] are reserved

Port C[27:4, 1:0] are reserved

Port E[31:10, 7:0] are reserved

Port H[31:8, 5:0] are reserved

31	30	29	28	27	26	25	24	23	22	21	20	19	18	17	16
OSPEED15 [1:0]		OSPEED14 [1:0]		OSPEED13 [1:0]		OSPEED12 [1:0]		OSPEED11 [1:0]		OSPEED10 [1:0]		OSPEED9 [1:0]		OSPEED8 [1:0]	
rw	rw	rw	rw	rw	rw	rw	rw	rw	rw	rw	rw	rw	rw	rw	rw

15	14	13	12	11	10	9	8	7	6	5	4	3	2	1	0
OSPEED7 [1:0]		OSPEED6 [1:0]		OSPEED5 [1:0]		OSPEED4 [1:0]		OSPEED3 [1:0]		OSPEED2 [1:0]		OSPEED1 [1:0]		OSPEED0 [1:0]	
rw	rw	rw	rw	rw	rw	rw	rw	rw	rw	rw	rw	rw	rw	rw	rw

Bits 31:0 **OSPEED[15:0][1:0]**: Port x configuration I/O pin y (y = 15 to 0)
These bits are written by software to configure the I/O output speed.
00: Low speed
01: Medium speed
10: Fast speed
11: High speed

Note: Refer to the device datasheet for the frequency specifications and the power supply and load conditions for each speed.

9.4.4 GPIO port pull-up/pull-down register (GPIOx_PUPDR) (x = A to C and E, H)

Address offset: 0x0C

Reset value: 0x6400 0000 (for port A)

Reset value: 0x0000 0100 (for port B)

Reset value: 0x0000 0000 (for other ports)

Port B[31:24, 21:20] are reserved

Port C[27:4, 1:0] are reserved

Port E[31:10, 7:0] are reserved

Port H[31:8, 5:0] are reserved

31	30	29	28	27	26	25	24	23	22	21	20	19	18	17	16
PUPD15[1:0]		PUPD14[1:0]		PUPD13[1:0]		PUPD12[1:0]		PUPD11[1:0]		PUPD10[1:0]		PUPD9[1:0]		PUPD8[1:0]	
rw	rw	rw	rw	rw	rw	rw	rw	rw	rw	rw	rw	rw	rw	rw	rw
15	14	13	12	11	10	9	8	7	6	5	4	3	2	1	0
PUPD7[1:0]		PUPD6[1:0]		PUPD5[1:0]		PUPD4[1:0]		PUPD3[1:0]		PUPD2[1:0]		PUPD1[1:0]		PUPD0[1:0]	
rw	rw	rw	rw	rw	rw	rw	rw	rw	rw	rw	rw	rw	rw	rw	rw

Bits 31:0 **PUPD[15:0][1:0]:** Port x configuration I/O pin y (y = 15 to 0)

These bits are written by software to configure the I/O pull-up or pull-down

00: No pull-up, pull-down
01: Pull-up
10: Pull-down
11: Reserved

9.4.5 GPIO port input data register (GPIOx_IDR) (x = A to C and E, H)

Address offset: 0x10

Reset value: 0x0000 XXXX

Port B[31:12, 10] are reserved

Port C[31:16, 13:2,0] are reserved

Port E[31:5, 3:0] are reserved

Port H[31:4, 2:0] are reserved

31	30	29	28	27	26	25	24	23	22	21	20	19	18	17	16
Res.	Res.	Res.	Res.	Res.	Res.	Res.	Res.	Res.	Res.	Res.	Res.	Res.	Res.	Res.	Res.
15	14	13	12	11	10	9	8	7	6	5	4	3	2	1	0
ID15	ID14	ID13	ID12	ID11	ID10	ID9	ID8	ID7	ID6	ID5	ID4	ID3	ID2	ID1	ID0
r	r	r	r	r	r	r	r	r	r	r	r	r	r	r	r

Bits 31:16 Reserved, must be kept at reset value.

Bits 15:0 **ID[15:0]:** Port x input data I/O pin y (y = 15 to 0)
These bits are read-only. They contain the input value of the corresponding I/O port.

9.4.6 GPIO port output data register (GPIOx_ODR) (x = A to C and E, H)

Address offset: 0x14

Reset value: 0x0000 0000

Port B[31:12, 10] are reserved

Port C[31:16, 13:2,0] are reserved

Port E[31:5, 3:0] are reserved

Port H[31:4, 2:0] are reserved

31	30	29	28	27	26	25	24	23	22	21	20	19	18	17	16
Res.	Res.	Res.	Res.	Res.	Res.	Res.	Res.	Res.	Res.	Res.	Res.	Res.	Res.	Res.	Res.
15	14	13	12	11	10	9	8	7	6	5	4	3	2	1	0
OD15	OD14	OD13	OD12	OD11	OD10	OD9	OD8	OD7	OD6	OD5	OD4	OD3	OD2	OD1	OD0
rw	rw	rw	rw	rw	rw	rw	rw	rw	rw	rw	rw	rw	rw	rw	rw

Bits 31:16 Reserved, must be kept at reset value.

Bits 15:0 **OD[15:0]:** Port output data I/O pin y (y = 15 to 0)
These bits can be read and written by software.
Note: For atomic bit set/reset, OD bits can be individually set and/or reset by writing to GPIO port bit set/reset register (GPIOx_BSRR) (x = A to C and E, H).

9.4.7 GPIO port bit set/reset register (GPIOx_BSRR) (x = A to C and E, H)

Address offset: 0x18

Reset value: 0x0000 0000

Port B[31:28, 26, 15:12, 10] are reserved

Port C[29:18, 16, 13:2,0] are reserved

Port E[31:21, 19, 3:0] are reserved

Port H[31:20, 18:4, 2:0] are reserved

31	30	29	28	27	26	25	24	23	22	21	20	19	18	17	16
BR15	BR14	BR13	BR12	BR11	BR10	BR9	BR8	BR7	BR6	BR5	BR4	BR3	BR2	BR1	BR0
w	w	w	w	w	w	w	w	w	w	w	w	w	w	w	w
15	14	13	12	11	10	9	8	7	6	5	4	3	2	1	0
BS15	BS14	BS13	BS12	BS11	BS10	BS9	BS8	BS7	BS6	BS5	BS4	BS3	BS2	BS1	BS0
w	w	w	w	w	w	w	w	w	w	w	w	w	w	w	w

Bits 31:16 **BR[15:0]:** Port x reset I/O pin y (y = 15 to 0)
These bits are write-only. A read to these bits returns the value 0x0000.
0: No action on the corresponding ODx bit
1: Resets the corresponding ODx bit
Note: If both BSx and BRx are set, BSx has priority.

Bits 15:0 **BS[15:0]:** Port x set I/O pin y (y = 15 to 0)
These bits are write-only. A read to these bits returns the value 0x0000.
0: No action on the corresponding ODx bit
1: Sets the corresponding ODx bit

9.4.8 GPIO port configuration lock register (GPIOx_LCKR) (x = A to C and E, H)

This register is used to lock the configuration of the port bits when a correct write sequence is applied to bit 16 (LCKK). The value of bits [15:0] is used to lock the configuration of the GPIO. During the write sequence, the value of LCKR[15:0] must not change. When the LOCK sequence has been applied on a port bit, the value of this port bit can no longer be modified until the next MCU reset or peripheral reset.

Note: A specific write sequence is used to write to the GPIOx_LCKR register. Only word access (32-bit long) is allowed during this locking sequence.

Each lock bit freezes a specific configuration register (control and alternate function registers).

Address offset: 0x1C

Reset value: 0x0000 0000

Port B[31:17, 15:12, 10] are reserved

Port C[31:17, 13:2,0] are reserved

Port E[31:17, 15:5, 3:0] are reserved

Port H[31:17, 15:4, 2:0] are reserved

31	30	29	28	27	26	25	24	23	22	21	20	19	18	17	16
Res.	Res.	Res.	Res.	Res.	Res.	Res.	Res.	Res.	Res.	Res.	Res.	Res.	Res.	Res.	LCKK
															rw
15	14	13	12	11	10	9	8	7	6	5	4	3	2	1	0
LCK15	LCK14	LCK13	LCK12	LCK11	LCK10	LCK9	LCK8	LCK7	LCK6	LCK5	LCK4	LCK3	LCK2	LCK1	LCK0
rw	rw	rw	rw	rw	rw	rw	rw	rw	rw	rw	rw	rw	rw	rw	rw

Bits 31:17 Reserved, must be kept at reset value.

Bit 16 **LCKK:** Lock key

This bit can be read any time. It can only be modified using the lock key write sequence.

0: Port configuration lock key not active

1: Port configuration lock key active. The GPIOx_LCKR register is locked until the next MCU reset or peripheral reset.

LOCK key write sequence:

WR LCKR[16] = ‘1’ + LCKR[15:0]

WR LCKR[16] = ‘0’ + LCKR[15:0]

WR LCKR[16] = ‘1’ + LCKR[15:0]

RD LCKR

RD LCKR[16] = ‘1’ (this read operation is optional but it confirms that the lock is active)

Note: During the LOCK key write sequence, the value of LCK[15:0] must not change.

Any error in the lock sequence aborts the lock.

After the first lock sequence on any bit of the port, any read access on the LCKK bit returns ‘1’ until the next MCU reset or peripheral reset.

Bits 15:0 **LCK[15:0]:** Port x lock I/O pin y (y = 15 to 0)

These bits are read/write but can only be written when the LCKK bit is ‘0.

0: Port configuration not locked

1: Port configuration locked

9.4.9 GPIO alternate function low register (GPIOx_AFRL) (x = A to C and E, H)

Address offset: 0x20

Reset value: 0x0000 0000

Port C[31:8, 3:0] are reserved

Port E[31:20, 15:0] are reserved

Port H[31:16, 11:0] are reserved

31	30	29	28	27	26	25	24	23	22	21	20	19	18	17	16
AFSEL7[3:0]				AFSEL6[3:0]				AFSEL5[3:0]				AFSEL4[3:0]			
rw	rw	rw	rw	rw	rw	rw	rw	rw	rw	rw	rw	rw	rw	rw	rw
15	14	13	12	11	10	9	8	7	6	5	4	3	2	1	0
AFSEL3[3:0]				AFSEL2[3:0]				AFSEL1[3:0]				AFSEL0[3:0]			
rw	rw	rw	rw	rw	rw	rw	rw	rw	rw	rw	rw	rw	rw	rw	rw

Bits 31:0 **AFSEL[7:0][3:0]:** Alternate function selection for port x I/O pin y (y = 7 to 0)
These bits are written by software to configure alternate function I/Os.
0000: AF0
0001: AF1
0010: AF2
0011: AF3
0100: AF4
0101: AF5
0110: AF6
0111: AF7
1000: AF8
1001: AF9
1010: AF10
1011: AF11
1100: AF12
1101: AF13
1110: AF14
1111: AF15

9.4.10 GPIO alternate function high register (GPIOx_AFRH) (x = A to C and E, H)

Address offset: 0x24

Reset value: 0x0000 0000

Port B[31:16, 11:8] are reserved

Port C[23:0] are reserved

Port E[31:0] are reserved

Port H[31:0] are reserved

31	30	29	28	27	26	25	24	23	22	21	20	19	18	17	16
AFSEL15[3:0]				AFSEL14[3:0]				AFSEL13[3:0]				AFSEL12[3:0]			
rw	rw	rw	rw	rw	rw	rw	rw	rw	rw	rw	rw	rw	rw	rw	rw
15	14	13	12	11	10	9	8	7	6	5	4	3	2	1	0
AFSEL11[3:0]				AFSEL10[3:0]				AFSEL9[3:0]				AFSEL8[3:0]			
rw	rw	rw	rw	rw	rw	rw	rw	rw	rw	rw	rw	rw	rw	rw	rw

Bits 31:0 **AFSEL[15:8][3:0]:** Alternate function selection for port x I/O pin y (y = 15 to 8)
These bits are written by software to configure alternate function I/Os.
0000: AF0
0001: AF1
0010: AF2
0011: AF3
0100: AF4
0101: AF5
0110: AF6
0111: AF7
1000: AF8
1001: AF9
1010: AF10
1011: AF11
1100: AF12
1101: AF13
1110: AF14
1111: AF15

9.4.11 GPIO port bit reset register (GPIOx_BRR) (x = A to C and E, H)

Address offset: 0x28

Reset value: 0x0000 0000

Port B[31:12, 10] are reserved

Port C[31:16, 13:2,0] are reserved

Port E[31:5, 3:0] are reserved

Port H[31:4, 2:0] are reserved

31	30	29	28	27	26	25	24	23	22	21	20	19	18	17	16
Res.	Res.	Res.	Res.	Res.	Res.	Res.	Res.	Res.	Res.	Res.	Res.	Res.	Res.	Res.	Res.
15	14	13	12	11	10	9	8	7	6	5	4	3	2	1	0
BR15	BR14	BR13	BR12	BR11	BR10	BR9	BR8	BR7	BR6	BR5	BR4	BR3	BR2	BR1	BR0
w	w	w	w	w	w	w	w	w	w	w	w	w	w	w	w

Bits 31:16 Reserved, must be kept at reset value.

Bits 15:0 **BR[15:0]:** Port x reset IO pin y (y = 15 to 0)
These bits are write-only. A read to these bits returns the value 0x0000.
0: No action on the corresponding ODx bit
1: Reset the corresponding ODx bit

9.4.12 GPIO register map

The following table gives the GPIO register map and reset values.

Table 42. GPIO register map and reset values

Offset	Register name	31	30	29	28	27	26	25	24	23	22	21	20	19	18	17	16	15	14	13	12	11	10	9	8	7	6	5	4	3	2	1	0
0x00	**GPIOA_MODER**	MODE15[1:0]		MODE14[1:0]		MODE13[1:0]		MODE12[1:0]		MODE11[1:0]		MODE10[1:0]		MODE9[1:0]		MODE8[1:0]		MODE7[1:0]		MODE6[1:0]		MODE5[1:0]		MODE4[1:0]		MODE3[1:0]		MODE2[1:0]		MODE1[1:0]		MODE0[1:0]	
	Reset value	1	0	1	0	1	0	1	1	1	1	1	1	1	1	1	1	1	1	1	1	1	1	1	1	1	1	1	1	1	1	1	1
0x00	**GPIOB_MODER**	Res.	Res.	Res.	Res.	Res.	Res.	Res.	Res.	MODE11[1:0]		Res.	Res.	MODE9[1:0]		MODE8[1:0]		MODE7[1:0]		MODE6[1:0]		MODE5[1:0]		MODE4[1:0]		MODE3[1:0]		MODE2[1:0]		MODE1[1:0]		MODE0[1:0]	
	Reset value									1	1			1	1	1	1	1	1	1	1	1	1	1	0	1	0	1	1	1	1	1	1
0x00	**GPIOC_MODER**	MODE15[1:0]		MODE14[1:0]		Res.	Res.	Res.	Res.	Res.	Res.	Res.	Res.	Res.	Res.	Res.	Res.	Res.	Res.	Res.	Res.	Res.	Res.	Res.	Res.	Res.	Res.	Res.	Res.	MODE1[1:0]		Res.	Res.
	Reset value	1	1	1	1																									1	1		
0x00	**GPIOE_MODER**	Res.	Res.	Res.	Res.	Res.	Res.	Res.	Res.	Res.	Res.	Res.	Res.	Res.	Res.	Res.	Res.	Res.	Res.	Res.	Res.	Res.	Res.	MODE4[1:0]		Res.	Res.	Res.	Res.	Res.	Res.	Res.	Res.
	Reset value																							1	1								
0x00	**GPIOH_MODER**	Res.	Res.	Res.	Res.	Res.	Res.	Res.	Res.	Res.	Res.	Res.	Res.	Res.	Res.	Res.	Res.	Res.	Res.	Res.	Res.	Res.	Res.	Res.	Res.	MODE3[1:0]		Res.	Res.	Res.	Res.	Res.	Res.
	Reset value																									1	1						
0x04	**GPIOA_OTYPER**	Res.	Res.	Res.	Res.	Res.	Res.	Res.	Res.	Res.	Res.	Res.	Res.	Res.	Res.	Res.	Res.	OT15	OT14	OT13	OT12	OT11	OT10	OT9	OT8	OT7	OT6	OT5	OT4	OT3	OT2	OT1	OT0
	Reset value																	0	0	0	0	0	0	0	0	0	0	0	0	0	0	0	0
0x04	**GPIOB_OTYPER**	Res.	Res.	Res.	Res.	Res.	Res.	Res.	Res.	Res.	Res.	Res.	Res.	Res.	Res.	Res.	Res.	Res.	Res.	Res.	Res.	OT11	Res.	OT9	OT8	OT7	OT6	OT5	OT4	OT3	OT2	OT1	OT0
	Reset value																					0		0	0	0	0	0	0	0	0	0	0
0x04	**GPIOC_OTYPER**	Res.	Res.	Res.	Res.	Res.	Res.	Res.	Res.	Res.	Res.	Res.	Res.	Res.	Res.	Res.	Res.	OT15	OT14	Res.	Res.	Res.	Res.	Res.	Res.	Res.	Res.	Res.	Res.	Res.	Res.	OT1	Res.
	Reset value																	0	0													0	
0x04	**GPIOE_OTYPER**	Res.	Res.	Res.	Res.	Res.	Res.	Res.	Res.	Res.	Res.	Res.	Res.	Res.	Res.	Res.	Res.	Res.	Res.	Res.	Res.	Res.	Res.	Res.	Res.	Res.	Res.	Res.	OT4	Res.	Res.	Res.	Res.
	Reset value																												0				
0x04	**GPIOH_OTYPER**	Res.	Res.	Res.	Res.	Res.	Res.	Res.	Res.	Res.	Res.	Res.	Res.	Res.	Res.	Res.	Res.	Res.	Res.	Res.	Res.	Res.	Res.	Res.	Res.	Res.	Res.	Res.	Res.	OT3	Res.	Res.	Res.
	Reset value																													0			

Table 42. GPIO register map and reset values (continued)

Offset	Register name	31	30	29	28	27	26	25	24	23	22	21	20	19	18	17	16	15	14	13	12	11	10	9	8	7	6	5	4	3	2	1	0
0x08	GPIOA_OSPEEDR	OSPEED15[1:0]		OSPEED14[1:0]		OSPEED13[1:0]		OSPEED12[1:0]		OSPEED11[1:0]		OSPEED10[1:0]		OSPEED9[1:0]		OSPEED8[1:0]		OSPEED7[1:0]		OSPEED6[1:0]		OSPEED5[1:0]		OSPEED4[1:0]		OSPEED3[1:0]		OSPEED2[1:0]		OSPEED1[1:0]		OSPEED0[1:0]	
	Reset value	0	0	0	0	1	1	0	0	0	0	0	0	0	0	0	0	0	0	0	0	0	0	0	0	0	0	0	0	0	0	0	0
0x08	GPIOB_OSPEEDR	Res.	Res.	Res.	Res.	Res.	Res.	Res.	Res.	OSPEED11[1:0]		Res.	Res.	OSPEED9[1:0]		OSPEED8[1:0]		OSPEED7[1:0]		OSPEED6[1:0]		OSPEED5[1:0]		OSPEED4[1:0]		OSPEED3[1:0]		OSPEED2[1:0]		OSPEED1[1:0]		OSPEED0[1:0]	
	Reset value									0	0			0	0	0	0	0	0	0	0	0	0	0	0	1	1	0	0	0	0	0	0
0x08	GPIOC_OSPEEDR	OSPEED15[1:0]		OSPEED14[1:0]		Res.	Res.	Res.	Res.	Res.	Res.	Res.	Res.	Res.	Res.	Res.	Res.	Res.	Res.	Res.	Res.	Res.	Res.	Res.	Res.	Res.	Res.	Res.	Res.	OSPEED1[1:0]		Res.	Res.
	Reset value	0	0	0	0																									0	0		
0x08	GPIOE_OSPEEDR	Res.	Res.	Res.	Res.	Res.	Res.	Res.	Res.	Res.	Res.	Res.	Res.	Res.	Res.	Res.	Res.	Res.	Res.	Res.	Res.	Res.	Res.	OSPEED4[1:0]		Res.	Res.	Res.	Res.	Res.	Res.	Res.	Res.
	Reset value																							0	0								
0x08	GPIOH_OSPEEDR	Res.	Res.	Res.	Res.	Res.	Res.	Res.	Res.	Res.	Res.	Res.	Res.	Res.	Res.	Res.	Res.	Res.	Res.	Res.	Res.	Res.	Res.	Res.	Res.	OSPEED3[1:0]		Res.	Res.	Res.	Res.	Res.	Res.
	Reset value																									0	0						
0x0C	GPIOA_PUPDR	PUPD15[1:0]		PUPD14[1:0]		PUPD13[1:0]		PUPD12[1:0]		PUPD11[1:0]		PUPD10[1:0]		PUPD9[1:0]		PUPD8[1:0]		PUPD7[1:0]		PUPD6[1:0]		PUPD5[1:0]		PUPD4[1:0]		PUPD3[1:0]		PUPD2[1:0]		PUPD1[1:0]		PUPD0[1:0]	
	Reset value	0	1	1	0	0	1	0	0	0	0	0	0	0	0	0	0	0	0	0	0	0	0	0	0	0	0	0	0	0	0	0	0
0x0C	GPIOB_PUPDR	Res.	Res.	Res.	Res.	Res.	Res.	Res.	Res.	PUPD11[1:0]		Res.	Res.	PUPD9[1:0]		PUPD8[1:0]		PUPD7[1:0]		PUPD6[1:0]		PUPD5[1:0]		PUPD4[1:0]		PUPD3[1:0]		PUPD2[1:0]		PUPD1[1:0]		PUPD0[1:0]	
	Reset value									0	0			0	0	0	0	0	0	0	0	0	0	0	1	0	0	0	0	0	0	0	0
0x0C	GPIOC_PUPDR	PUPD15[1:0]		PUPD14[1:0]		Res.	Res.	Res.	Res.	Res.	Res.	Res.	Res.	Res.	Res.	Res.	Res.	Res.	Res.	Res.	Res.	Res.	Res.	Res.	Res.	Res.	Res.	Res.	Res.	PUPD1[1:0]		Res.	Res.
	Reset value	0	0	0	0																									0	0		
0x0C	GPIOE_PUPDR	Res.	Res.	Res.	Res.	Res.	Res.	Res.	Res.	Res.	Res.	Res.	Res.	Res.	Res.	Res.	Res.	Res.	Res.	Res.	Res.	Res.	Res.	PUPD4[1:0]		Res.	Res.	Res.	Res.	Res.	Res.	Res.	Res.
	Reset value																							0	0								
0x0C	GPIOH_PUPDR	Res.	Res.	Res.	Res.	Res.	Res.	Res.	Res.	Res.	Res.	Res.	Res.	Res.	Res.	Res.	Res.	Res.	Res.	Res.	Res.	Res.	Res.	Res.	Res.	PUPD3[1:0]		Res.	Res.	Res.	Res.	Res.	Res.
	Reset value																									0	0						

Table 42. GPIO register map and reset values (continued)

Offset	Register name	31	30	29	28	27	26	25	24	23	22	21	20	19	18	17	16	15	14	13	12	11	10	9	8	7	6	5	4	3	2	1	0
0x10	**GPIOA_IDR**	Res.	Res.	Res.	Res.	Res.	Res.	Res.	Res.	Res.	Res.	Res.	Res.	Res.	Res.	Res.	Res.	ID15	ID14	ID13	ID12	ID11	ID10	ID9	ID8	ID7	ID6	ID5	ID4	ID3	ID2	ID1	ID0
	Reset value																	x	x	x	x	x	x	x	x	x	x	x	x	x	x	x	x
0x10	**GPIOB_IDR**	Res.	Res.	Res.	Res.	Res.	Res.	Res.	Res.	Res.	Res.	Res.	Res.	Res.	Res.	Res.	Res.	Res.	Res.	Res.	Res.	ID11	Res.	ID9	ID8	ID7	ID6	ID5	ID4	ID3	ID2	ID1	ID0
	Reset value																					x		x	x	x	x	x	x	x	x	x	x
0x10	**GPIOC_IDR**	Res.	Res.	Res.	Res.	Res.	Res.	Res.	Res.	Res.	Res.	Res.	Res.	Res.	Res.	Res.	Res.	ID15	ID14	Res.	Res.	Res.	Res.	Res.	Res.	Res.	Res.	Res.	Res.	Res.	Res.	ID1	Res.
	Reset value																	x	x													x	
0x10	**GPIOE_IDR**	Res.	Res.	Res.	Res.	Res.	Res.	Res.	Res.	Res.	Res.	Res.	Res.	Res.	Res.	Res.	Res.	Res.	Res.	Res.	Res.	Res.	Res.	Res.	Res.	Res.	Res.	Res.	ID4	Res.	Res.	Res.	Res.
	Reset value																												x				
0x10	**GPIOH_IDR**	Res.	Res.	Res.	Res.	Res.	Res.	Res.	Res.	Res.	Res.	Res.	Res.	Res.	Res.	Res.	Res.	Res.	Res.	Res.	Res.	Res.	Res.	Res.	Res.	Res.	Res.	Res.	Res.	ID3	Res.	Res.	Res.
	Reset value																													x			
0x14	**GPIOA_ODR**	Res.	Res.	Res.	Res.	Res.	Res.	Res.	Res.	Res.	Res.	Res.	Res.	Res.	Res.	Res.	Res.	OD15	OD14	OD13	OD12	OD11	OD10	OD9	OD8	OD7	OD6	OD5	OD4	OD3	OD2	OD1	OD0
	Reset value																	0	0	0	0	0	0	0	0	0	0	0	0	0	0	0	0
0x14	**GPIOB_ODR**	Res.	Res.	Res.	Res.	Res.	Res.	Res.	Res.	Res.	Res.	Res.	Res.	Res.	Res.	Res.	Res.	Res.	Res.	Res.	Res.	OD11	Res.	OD9	OD8	OD7	OD6	OD5	OD4	OD3	OD2	OD1	OD0
	Reset value																					0		0	0	0	0	0	0	0	0	0	0
0x14	**GPIOC_ODR**	Res.	Res.	Res.	Res.	Res.	Res.	Res.	Res.	Res.	Res.	Res.	Res.	Res.	Res.	Res.	Res.	OD15	OD14	Res.	Res.	Res.	Res.	Res.	Res.	Res.	Res.	Res.	Res.	Res.	Res.	OD1	Res.
	Reset value																	0	0													0	
0x14	**GPIOE_ODR**	Res.	Res.	Res.	Res.	Res.	Res.	Res.	Res.	Res.	Res.	Res.	Res.	Res.	Res.	Res.	Res.	Res.	Res.	Res.	Res.	Res.	Res.	Res.	Res.	Res.	Res.	Res.	OD4	Res.	Res.	Res.	Res.
	Reset value																												0				
0x14	**GPIOH_ODR**	Res.	Res.	Res.	Res.	Res.	Res.	Res.	Res.	Res.	Res.	Res.	Res.	Res.	Res.	Res.	Res.	Res.	Res.	Res.	Res.	Res.	Res.	Res.	Res.	Res.	Res.	Res.	Res.	OD3	Res.	Res.	Res.
	Reset value																													0			
0x18	**GPIOA_BSRR**	BR15	BR14	BR13	BR12	BR11	BR10	BR9	BR8	BR7	BR6	BR5	BR4	BR3	BR2	BR1	BR0	BS15	BS14	BS13	BS12	BS11	BS10	BS9	BS8	BS7	BS6	BS5	BS4	BS3	BS2	BS1	BS0
	Reset value	0	0	0	0	0	0	0	0	0	0	0	0	0	0	0	0	0	0	0	0	0	0	0	0	0	0	0	0	0	0	0	0
0x18	**GPIOB_BSRR**	Res.	Res.	Res.	Res.	BR11	Res.	BR9	BR8	BR7	BR6	BR5	BR4	BR3	BR2	BR1	BR0	Res.	Res.	Res.	Res.	BS11	Res.	BS9	BS8	BS7	BS6	BS5	BS4	BS3	BS2	BS1	BS0
	Reset value					0		0	0	0	0	0	0	0	0	0	0					0		0	0	0	0	0	0	0	0	0	0
0x18	**GPIOC_BSRR**	BR15	BR14	Res.	Res.	Res.	Res.	Res.	Res.	Res.	Res.	Res.	Res.	Res.	Res.	BR1	Res.	BS15	BS14	Res.	Res.	Res.	Res.	Res.	Res.	Res.	Res.	Res.	Res.	Res.	Res.	BS1	Res.
	Reset value	0	0													0		0	0													0	
0x18	**GPIOE_BSRR**	Res.	Res.	Res.	Res.	Res.	Res.	Res.	Res.	Res.	Res.	Res.	BR4	Res.	Res.	Res.	Res.	Res.	Res.	Res.	Res.	Res.	Res.	Res.	Res.	Res.	Res.	Res.	BS4	Res.	Res.	Res.	Res.
	Reset value												0																0				
0x18	**GPIOH_BSRR**	Res.	Res.	Res.	Res.	Res.	Res.	Res.	Res.	Res.	Res.	Res.	Res.	BR3	Res.	Res.	Res.	Res.	Res.	Res.	Res.	Res.	Res.	Res.	Res.	Res.	Res.	Res.	Res.	BS3	Res.	Res.	Res.
	Reset value													0																0			
0x1C	**GPIOA_LCKR**	Res.	Res.	Res.	Res.	Res.	Res.	Res.	Res.	Res.	Res.	Res.	Res.	Res.	Res.	Res.	LCKK	LCK15	LCK14	LCK13	LCK12	LCK11	LCK10	LCK9	LCK8	LCK7	LCK6	LCK5	LCK4	LCK3	LCK2	LCK1	LCK0
	Reset value																0	0	0	0	0	0	0	0	0	0	0	0	0	0	0	0	0
0x1C	**GPIOB_LCKR**	Res.	Res.	Res.	Res.	Res.	Res.	Res.	Res.	Res.	Res.	Res.	Res.	Res.	Res.	Res.	LCKK	Res.	Res.	Res.	Res.	LCK11	Res.	LCK9	LCK8	LCK7	LCK6	LCK5	LCK4	LCK3	LCK2	LCK1	LCK0
	Reset value																0					0		0	0	0	0	0	0	0	0	0	0

Table 42. GPIO register map and reset values (continued)

Offset	Register name	31	30	29	28	27	26	25	24	23	22	21	20	19	18	17	16	15	14	13	12	11	10	9	8	7	6	5	4	3	2	1	0
0x1C	**GPIOC_LCKR**	Res.	Res.	Res.	Res.	Res.	Res.	Res.	Res.	Res.	Res.	Res.	Res.	Res.	Res.	Res.	LCKK	LCK15	LCK14	Res.	Res.	Res.	Res.	Res.	Res.	Res.	Res.	Res.	Res.	Res.	Res.	LCK1	Res.
	Reset value																0	0	0													0	
0x1C	**GPIOE_LCKR**	Res.	Res.	Res.	Res.	Res.	Res.	Res.	Res.	Res.	Res.	Res.	Res.	Res.	Res.	Res.	LCKK	Res.	Res.	Res.	Res.	Res.	Res.	Res.	Res.	Res.	Res.	Res.	LCK4	Res.	Res.	Res.	Res.
	Reset value																0												0				
0x1C	**GPIOH_LCKR**	Res.	Res.	Res.	Res.	Res.	Res.	Res.	Res.	Res.	Res.	Res.	Res.	Res.	Res.	Res.	LCKK	Res.	Res.	Res.	Res.	Res.	Res.	Res.	Res.	Res.	Res.	Res.	Res.	LCK3	Res.	Res.	Res.
	Reset value																0													0			
0x20	**GPIOx_AFRL** (where x = **A**,**B**)	AFSEL7[3:0]				AFSEL6[3:0]				AFSEL5[3:0]				AFSEL4[3:0]				AFSEL3[3:0]				AFSEL2[3:0]				AFSEL1[3:0]				AFSEL0[3:0]			
	Reset value	0	0	0	0	0	0	0	0	0	0	0	0	0	0	0	0	0	0	0	0	0	0	0	0	0	0	0	0	0	0	0	0
0x20	**GPIOC_AFRL**	Res.	Res.	Res.	Res.	Res.	Res.	Res.	Res.	Res.	Res.	Res.	Res.	Res.	Res.	Res.	Res.	Res.	Res.	Res.	Res.	Res.	Res.	Res.	Res.	AFSEL1[3:0]				Res.	Res.	Res.	Res.
	Reset value																									0	0	0	0				
0x20	**GPIOE_AFRL**	Res.	Res.	Res.	Res.	Res.	Res.	Res.	Res.	Res.	Res.	Res.	Res.	AFSEL4 [3:0]				Res.	Res.	Res.	Res.	Res.	Res.	Res.	Res.	Res.	Res.	Res.	Res.	Res.	Res.	Res.	Res.
	Reset value													0	0	0	0																
0x20	**GPIOH_AFRL**	Res.	Res.	Res.	Res.	Res.	Res.	Res.	Res.	Res.	Res.	Res.	Res.	Res.	Res.	Res.	Res.	AFSEL3 [3:0]				Res.	Res.	Res.	Res.	Res.	Res.	Res.	Res.	Res.	Res.	Res.	Res.
	Reset value																	0	0	0	0												
0x24	**GPIOA_AFRH**	AFSEL15 [3:0]				AFSEL14 [3:0]				AFSEL13 [3:0]				AFSEL12 [3:0]				AFSEL11 [3:0]				AFSEL10 [3:0]				AFSEL9 [3:0]				AFSEL8 [3:0]			
	Reset value	0	0	0	0	0	0	0	0	0	0	0	0	0	0	0	0	0	0	0	0	0	0	0	0	0	0	0	0	0	0	0	0
0x24	**GPIOB_AFRH**	Res.	Res.	Res.	Res.	Res.	Res.	Res.	Res.	Res.	Res.	Res.	Res.	Res.	Res.	Res.	Res.	AFSEL11 [3:0]				Res.	Res.	Res.	Res.	AFSEL9 [3:0]				AFSEL8 [3:0]			
	Reset value																	0	0	0	0					0	0	0	0	0	0	0	0
0x24	**GPIOC_AFRH**	AFSEL15 [3:0]				AFSEL14 [3:0]				Res.	Res.	Res.	Res.	Res.	Res.	Res.	Res.	Res.	Res.	Res.	Res.	Res.	Res.	Res.	Res.	Res.	Res.	Res.	Res.	Res.	Res.	Res.	Res.
	Reset value	0	0	0	0	0	0	0	0																								
0x28	**GPIOA_BRR**	Res.	Res.	Res.	Res.	Res.	Res.	Res.	Res.	Res.	Res.	Res.	Res.	Res.	Res.	Res.	Res.	BR15	BR14	BR13	BR12	BR11	BR10	BR9	BR8	BR7	BR6	BR5	BR4	BR3	BR2	BR1	BR0
	Reset value																	0	0	0	0	0	0	0	0	0	0	0	0	0	0	0	0
0x28	**GPIOB_BRR**	Res.	Res.	Res.	Res.	Res.	Res.	Res.	Res.	Res.	Res.	Res.	Res.	Res.	Res.	Res.	Res.	Res.	Res.	Res.	Res.	BR11	Res.	BR9	BR8	BR7	BR6	BR5	BR4	BR3	BR2	BR1	BR0
	Reset value																					0		0	0	0	0	0	0	0	0	0	0
0x28	**GPIOC_BRR**	Res.	Res.	Res.	Res.	Res.	Res.	Res.	Res.	Res.	Res.	Res.	Res.	Res.	Res.	Res.	Res.	BR15	BR14	Res.	Res.	Res.	Res.	Res.	Res.	Res.	Res.	Res.	Res.	Res.	Res.	Res.	Res.
	Reset value																	0	0														
0x28	**GPIOE_BRR**	Res.	Res.	Res.	Res.	Res.	Res.	Res.	Res.	Res.	Res.	Res.	Res.	Res.	Res.	Res.	Res.	Res.	Res.	Res.	Res.	Res.	Res.	Res.	Res.	Res.	Res.	Res.	BR4	Res.	Res.	Res.	Res.
	Reset value																												0				
0x28	**GPIOH_BRR**	Res.	Res.	Res.	Res.	Res.	Res.	Res.	Res.	Res.	Res.	Res.	Res.	Res.	Res.	Res.	Res.	Res.	Res.	Res.	Res.	Res.	Res.	Res.	Res.	Res.	Res.	Res.	Res.	BR3	Res.	Res.	Res.
	Reset value																													0			

Refer to *Section 2.2 on page 55* for the register boundary addresses.

10 System configuration controller (SYSCFG)

10.1 SYSCFG main features

The devices feature a set of configuration registers. The main purposes of the system configuration controller are the following:

- Remapping memory areas
- Managing the external interrupt line connection to the GPIOs
- Managing robustness feature
- Setting SRAM2 and PKA RAM write protection and software erase
- Configuring FPU interrupts
- Enabling /disabling I^2C Fast-mode Plus driving capability on some I/Os and voltage booster for I/Os analog switches
- Interrupt pre-masking

10.2 SYSCFG registers

10.2.1 SYSCFG memory remap register (SYSCFG_MEMRMP)

This register is used for specific configurations on memory remap.

Address offset: 0x000

Reset value: 0x0000 000X (X is the memory mode selected by the BOOT0 pin and BOOT1 option bit)

31	30	29	28	27	26	25	24	23	22	21	20	19	18	17	16
Res.	Res.	Res.	Res.	Res.	Res.	Res.	Res.	Res.	Res.	Res.	Res.	Res.	Res.	Res.	Res.
15	14	13	12	11	10	9	8	7	6	5	4	3	2	1	0
Res.	Res.	Res.	Res.	Res.	Res.	Res.	Res.	Res.	Res.	Res.	Res.	Res.	MEM_MODE[2:0]		
													rw	rw	rw

Bits 31:3 Reserved, must be kept at reset value.

Bits 2:0 **MEM_MODE[2:0]:** Memory mapping selection

These bits control the memory internal mapping at address 0x0000 0000. These bits are used to select the physical remap by software and so, bypass the BOOT mode setting. After reset these bits take the value selected by BOOT0 (pin or option bit depending on nSWBOOT0 option bit) and BOOT1 option bit.

000: Main Flash memory mapped at CPU1 0x00000000
001: System Flash memory mapped at CPU1 0x00000000
010: Reserved
011: SRAM1 mapped at CPU1 0x00000000
100: Reserved
101: Reserved
110: Reserved
111: Reserved

10.2.2 SYSCFG configuration register 1 (SYSCFG_CFGR1)

Address offset: 0x004

Reset value: 0x7C00 0001

31	30	29	28	27	26	25	24	23	22	21	20	19	18	17	16
FPU_IE[5:0]						Res.	Res.	Res.	Res.	Res.	I2C1_FMP	I2C_PB9_FMP	I2C_PB8_FMP	I2C_PB7_FMP	I2C_PB6_FMP
rw	rw	rw	rw	rw	rw						rw	rw	rw	rw	rw

15	14	13	12	11	10	9	8	7	6	5	4	3	2	1	0
Res.	Res.	Res.	Res.	Res.	Res.	Res.	BOOSTEN	Res.	Res.	Res.	Res.	Res.	Res.	Res.	Res.
							rw								

Bits 31:26 **FPU_IE[5:0]**: CPU1 FPU interrupts enable bits
FPU_IE[5]: Inexact interrupt enable
FPU_IE[4]: Input denormal interrupt enable
FPU_IE[3]: Overflow interrupt enable
FPU_IE[2]: underflow interrupt enable
FPU_IE[1]: Divide-by-zero interrupt enable
FPU_IE[0]: Invalid operation interrupt enable

Bits 25:21 Reserved, must be kept at reset value.

Bit 20 **I2C1_FMP:** I2C1 Fast-mode Plus driving capability activation
This bit enables the Fm+ driving mode on I2C1 pins selected through AF selection bits.
0: Fm+ mode is not enabled on I2C1 pins selected through AF selection bits
1: Fm+ mode is enabled on I2C1 pins selected through AF selection bits.

Bit 19 **I2C_PB9_FMP**: Fast-mode Plus (Fm+) driving capability activation on PB9
This bit enables the Fm+ driving mode for PB9.
0: PB9 pin operates in standard mode.
1: Fm+ mode enabled on PB9 pin, and the Speed control is bypassed.

Bit 18 **I2C_PB8_FMP**: Fast-mode Plus (Fm+) driving capability activation on PB8
This bit enables the Fm+ driving mode for PB8.
0: PB8 pin operates in standard mode.
1: Fm+ mode enabled on PB8 pin, and the Speed control is bypassed.

Bit 17 **I2C_PB7_FMP**: Fast-mode Plus (Fm+) driving capability activation on PB7
This bit enables the Fm+ driving mode for PB7.
0: PB7 pin operates in standard mode.
1: Fm+ mode enabled on PB7 pin, and the Speed control is bypassed.

Bit 16 **I2C_PB6_FMP**: Fast-mode Plus (Fm+) driving capability activation on PB6
This bit enables the Fm+ driving mode for PB6.
0: PB6 pin operates in standard mode.
1: Fm+ mode enabled on PB6 pin, and the Speed control is bypassed.

Bits 15:9 Reserved, must be kept at reset value.

Bit 8 **BOOSTEN:** I/O analog switch voltage booster enable

0: I/O analog switches are supplied by V_{DDA} voltage. This is the recommended configuration when using the ADC in high V_{DDA} voltage operation.

1: I/O analog switches are supplied by a dedicated voltage booster (supplied by V_{DD}). This is the recommended configuration when using the ADC in low V_{DDA} voltage operation.

Bits 7:0 Reserved, must be kept at reset value.

10.2.3 SYSCFG external interrupt configuration register 1 (SYSCFG_EXTICR1)

Address offset: 0x008

Reset value: 0x0000 0000

31	30	29	28	27	26	25	24	23	22	21	20	19	18	17	16
Res.	Res.	Res.	Res.	Res.	Res.	Res.	Res.	Res.	Res.	Res.	Res.	Res.	Res.	Res.	Res.

15	14	13	12	11	10	9	8	7	6	5	4	3	2	1	0
Res.	EXTI3[2:0]			Res.	EXTI2[2:0]			Res.	EXTI1[2:0]			Res.	EXTI0[2:0]		
	rw	rw	rw		rw	rw	rw		rw	rw	rw		rw	rw	rw

Bits 31:15 Reserved, must be kept at reset value.

Bits 14:12 **EXTI3[2:0]**: EXTI 3 configuration bits

These bits are written by software to select the source input for the EXTI3 external interrupt.

000: PA[3] pin
001: PB[3] pin
010: Reserved
011: Reserved
100: Reserved
101: Reserved
110: Reserved
111: PH[3] pin

Bit 11 Reserved, must be kept at reset value.

Bits 10:8 **EXTI2[2:0]**: EXTI 2 configuration bits

These bits are written by software to select the source input for the EXTI2 external interrupt.

000: PA[2] pin
001: PB[2] pin
010: Reserved
011: Reserved
100: Reserved
101: Reserved
110: Reserved
111: Reserved

Bit 7 Reserved, must be kept at reset value.

Bits 6:4 **EXTI1[2:0]**: EXTI 1 configuration bits

These bits are written by software to select the source input for the EXTI1 external interrupt.

000: PA[1] pin
001: PB[1] pin
010: PC[1] pin
011: Reserved
100: Reserved
101: Reserved
110: Reserved
111: Reserved

Bit 3 Reserved, must be kept at reset value.

Bits 2:0 **EXTI0[2:0]**: EXTI 0 configuration bits

These bits are written by software to select the source input for the EXTI0 external interrupt.

000: PA[0] pin
001: PB[0] pin
010: Reserved
011: Reserved
100: Reserved
101: Reserved
110: Reserved
111: Reserved

Note: Some of the I/O pins mentioned in this register may be not available on small packages.

10.2.4 SYSCFG external interrupt configuration register 2 (SYSCFG_EXTICR2)

Address offset: 0x00C

Reset value: 0x0000 0000

31	30	29	28	27	26	25	24	23	22	21	20	19	18	17	16
Res.	Res.	Res.	Res.	Res.	Res.	Res.	Res.	Res.	Res.	Res.	Res.	Res.	Res.	Res.	Res.

15	14	13	12	11	10	9	8	7	6	5	4	3	2	1	0
Res.	EXTI7[2:0]			Res.	EXTI6[2:0]			Res.	EXTI5[2:0]			Res.	EXTI4[2:0]		
	rw	rw	rw		rw	rw	rw		rw	rw	rw		rw	rw	rw

Bits 31:15 Reserved, must be kept at reset value.

Bits 14:12 **EXTI7[2:0]**: EXTI 7 configuration bits

These bits are written by software to select the source input for the EXTI7 external interrupt.

000: PA[7] pin
001: PB[7] pin
010: Reserved
011: Reserved
100: Reserved
101: Reserved
110: Reserved
111: Reserved

Bit 11 Reserved, must be kept at reset value.

Bits 10:8 **EXTI6[2:0]**: EXTI 6 configuration bits

These bits are written by software to select the source input for the EXTI6 external interrupt.
000: PA[6] pin
001: PB[6] pin
010: Reserved
011: Reserved
100: Reserved
101: Reserved
110: Reserved
111: Reserved

Bit 7 Reserved, must be kept at reset value.

Bits 6:4 **EXTI5[2:0]**: EXTI 5 configuration bits

These bits are written by software to select the source input for the EXTI5 external interrupt.
000: PA[5] pin
001: PB[5] pin
010: Reserved
011: Reserved
100: Reserved
101: Reserved
110: Reserved
111: Reserved

Bit 3 Reserved, must be kept at reset value.

Bits 2:0 **EXTI4[2:0]**: EXTI 4 configuration bits

These bits are written by software to select the source input for the EXTI4 external interrupt.
000: PA[4] pin
001: PB[4] pin
010: Reserved
011: Reserved
100: PE[4] pin
101: Reserved
110: Reserved
111: Reserved

Note: Some of the I/O pins mentioned in this register may be not available on small packages.

10.2.5 SYSCFG external interrupt configuration register 3 (SYSCFG_EXTICR3)

Address offset: 0x010

Reset value: 0x0000 0000

31	30	29	28	27	26	25	24	23	22	21	20	19	18	17	16
Res.	Res.	Res.	Res.	Res.	Res.	Res.	Res.	Res.	Res.	Res.	Res.	Res.	Res.	Res.	Res.

15	14	13	12	11	10	9	8	7	6	5	4	3	2	1	0
Res.	EXTI11[2:0]			Res.	EXTI10[2:0]			Res.	EXTI9[2:0]			Res.	EXTI8[2:0]		
	rw	rw	rw		rw	rw	rw		rw	rw	rw		rw	rw	rw

Bits 31:15 Reserved, must be kept at reset value.

Bits 14:12 **EXTI11[2:0]**: EXTI 11 configuration bits

These bits are written by software to select the source input for the EXTI11 external interrupt.

000: PA[11] pin
001: PB[11] pin
010: Reserved
011: Reserved
100: Reserved
101: Reserved
110: Reserved
111: Reserved

Bit 11 Reserved, must be kept at reset value.

Bits 10:8 **EXTI10[2:0]**: EXTI 10 configuration bits

These bits are written by software to select the source input for the EXTI10 external interrupt.

000: PA[10] pin
001: PB[10] pin
010: Reserved
011: Reserved
100: Reserved
101: Reserved
110: Reserved
111: Reserved

Bit 7 Reserved, must be kept at reset value.

Bits 6:4 **EXTI9[2:0]**: EXTI 9 configuration bits

These bits are written by software to select the source input for the EXTI9 external interrupt.

000: PA[9] pin
001: PB[9] pin
010: Reserved
011: Reserved
100: Reserved
101: Reserved
110: Reserved
111: Reserved

Bit 3 Reserved, must be kept at reset value.

Bits 2:0 **EXTI8[2:0]**: EXTI 8 configuration bits

These bits are written by software to select the source input for the EXTI8 external interrupt.

000: PA[8] pin
001: PB[8] pin
010: Reserved
011: Reserved
100: Reserved
101: Reserved
110: Reserved
111: Reserved

Note: Some of the I/O pins mentioned in this register may be not available on small packages.

10.2.6 SYSCFG external interrupt configuration register 4 (SYSCFG_EXTICR4)

Address offset: 0x014

Reset value: 0x0000 0000

31	30	29	28	27	26	25	24	23	22	21	20	19	18	17	16
Res.	Res.	Res.	Res.	Res.	Res.	Res.	Res.	Res.	Res.	Res.	Res.	Res.	Res.	Res.	Res.

15	14	13	12	11	10	9	8	7	6	5	4	3	2	1	0
Res.	EXTI15[2:0]			Res.	EXTI14[2:0]			Res.	EXTI13[2:0]			Res.	EXTI12[2:0]		
	rw	rw	rw		rw	rw	rw		rw	rw	rw		rw	rw	rw

Bits 31:15 Reserved, must be kept at reset value.

Bits 14:12 **EXTI15[2:0]**: EXTI15 configuration bits

These bits are written by software to select the source input for the EXTI15 external interrupt.

000: PA[15] pin
001: PB[15] pin
010: PC[15] pin
011: Reserved
100: Reserved
101: Reserved
110: Reserved
111: Reserved

Bit 11 Reserved, must be kept at reset value.

Bits 10:8 **EXTI14[2:0]**: EXTI14 configuration bits

These bits are written by software to select the source input for the EXTI14 external interrupt.

000: PA[14] pin
001: PB[14] pin
010: PC[14] pin
011: Reserved
100: Reserved
101: Reserved
110: Reserved
111: Reserved

Bit 7 Reserved, must be kept at reset value.

Bits 6:4 **EXTI13[2:0]**: EXTI13 configuration bits

These bits are written by software to select the source input for the EXTI13 external interrupt.

000: PA[13] pin
001: PB[13] pin
010: Reserved
011: Reserved
100: Reserved
101: Reserved
110: Reserved
111: Reserved

Bit 3 Reserved, must be kept at reset value.

Bits 2:0 **EXTI12[2:0]**: EXTI12 configuration bits

These bits are written by software to select the source input for the EXTI12 external interrupt.

000: PA[12] pin
001: PB[12] pin
010: Reserved
011: Reserved
100: Reserved
101: Reserved
110: Reserved
111: Reserved

Note: Some of the I/O pins mentioned in this register may be not available on small packages.

10.2.7 SYSCFG SRAM2 control and status register (SYSCFG_SCSR)

Address offset: 0x18

System reset value: 0x0000 0000

31	30	29	28	27	26	25	24	23	22	21	20	19	18	17	16
C2RFD	Res.	Res.	Res.	Res.	Res.	Res.	Res.	Res.	Res.	Res.	Res.	Res.	Res.	Res.	Res.
rw															

15	14	13	12	11	10	9	8	7	6	5	4	3	2	1	0
Res.	Res.	Res.	Res.	Res.	Res.	Res.	Res.	Res.	Res.	Res.	Res.	Res.	Res.	SRAM2 BSY	SRAM2 ER
														r	rw

Bit 31 **C2RFD**: CPU2 SRAM fetch (execution) disable.

This bit can be set by software and be reset by a hardware reset, including a reset after Standby. Software writing 'b0 has no effect.

0: CPU2 fetch from SRAM1, SRAM2a and SRAM2b enabled, allows CPU2 to fetch and execute code from SRAMs

1: CPU2 fetch from SRAM1, SRAM2a and SRAM2b disabled, Any CPU2 fetch from SRAMs generates a bus error.

Bits 30:2 Reserved, must be kept at reset value.

Bit 1 **SRAM2BSY:** SRAM2 and PKA RAM busy by erase operation

0: Nor SRAM2 neither PKA RAM erase operation is on going.

1: SRAM2 and/or PKA RAM erase operation is on going.

Bit 0 **SRAM2ER:** SRAM2 and PKA RAM Erase

Setting this bit starts a hardware SRAM2 and PKA RAM erase operation. This bit is automatically cleared at the end of the SRAM2 and PKA RAM erase operation.

Note: This bit is write-protected: setting this bit is possible only after the correct key sequence is written in the SYSCFG_SKR register.

10.2.8 SYSCFG configuration register 2 (SYSCFG_CFGR2)

Address offset: 0x01C

System reset value: 0x0000 0000

31	30	29	28	27	26	25	24	23	22	21	20	19	18	17	16
Res.	Res.	Res.	Res.	Res.	Res.	Res.	Res.	Res.	Res.	Res.	Res.	Res.	Res.	Res.	Res.
15	14	13	12	11	10	9	8	7	6	5	4	3	2	1	0
Res.	Res.	Res.	Res.	Res.	Res.	Res.	SPF	Res.	Res.	Res.	Res.	ECCL	PVDL	SPL	CLL
							rc_w1					rs	rs	rs	rs

Bits 31:9 Reserved, must be kept at reset value.

Bit 8 **SPF**: SRAM2 parity error flag

This bit is set by hardware when an SRAM2 parity error is detected. It is cleared by software by writing ‘1’.

0: No SRAM2 parity error detected

1: SRAM2 parity error detected

Bits 7:4 Reserved, must be kept at reset value.

Bit 3 **ECCL**: ECC Lock

This bit is set by software and cleared only by a system reset. It can be used to enable and lock the Flash ECC error connection to TIM1/16/17 Break input.

0: ECC error disconnected from TIM1/16/17 Break input.

1: ECC error connected to TIM1/16/17 Break input.

Bit 2 **PVDL**: PVD lock enable bit

This bit is set by software and cleared only by a system reset. It can be used to enable and lock the PVD connection to TIM1/16/17 Break input, as well as the PVDE and PLS[2:0] in the PWR_CR2 register.

0: PVD interrupt disconnected from TIM1/16/17 Break input. PVDE and PLS[2:0] bits can be programmed by the application.

1: PVD interrupt connected to TIM1/16/17 Break input, PVDE and PLS[2:0] bits are read only.

Bit 1 **SPL**: SRAM2 parity lock bit

This bit is set by software and cleared only by a system reset. It can be used to enable and lock the SRAM2 parity error signal connection to TIM1/16/17 Break inputs.

0: SRAM2 parity error signal disconnected from TIM1/16/17 Break inputs

1: SRAM2 parity error signal connected to TIM1/16/17 Break inputs

Bit 0 **CLL:** CPU1 LOCKUP (Hardfault) output enable bit

This bit is set by software and cleared only by a system reset. It can be used to enable and lock the connection of CPU1 LOCKUP (Hardfault) output to TIM1/16/17 Break input

0: CPU1 LOCKUP output disconnected from TIM1/16/17 Break inputs

1: CPU1 LOCKUP output connected to TIM1/16/17 Break inputs

10.2.9 SYSCFG SRAM2 write protection register (SYSCFG_SWPR1)

Address offset: 0x020

System reset value: 0x0000 0000

31	30	29	28	27	26	25	24	23	22	21	20	19	18	17	16
P31WP	P30WP	P29WP	P28WP	P27WP	P26WP	P25WP	P24WP	P23WP	P22WP	P21WP	P20WP	P19WP	P18WP	P17WP	P16WP
rs	rs	rs	rs	rs	rs	rs	rs	rs	rs	rs	rs	rs	rs	rs	rs
15	14	13	12	11	10	9	8	7	6	5	4	3	2	1	0
P15WP	P14WP	P13WP	P12WP	P11WP	P10WP	P9WP	P8WP	P7WP	P6WP	P5WP	P4WP	P3WP	P2WP	P1WP	P0WP
rs	rs	rs	rs	rs	rs	rs	rs	rs	rs	rs	rs	rs	rs	rs	rs

Bits 31:0 **PxWP** (x= 0 to 31): SRAM2 1Kbyte page x write protection

These bits are set by software and cleared only by a system reset.

0: Write protection of SRAM2 1Kbyte page x is disabled.

1: Write protection of SRAM2 1Kbyte page x is enabled.

10.2.10 SYSCFG SRAM2 key register (SYSCFG_SKR)

Address offset: 0x024

System reset value: 0x0000 0000

31	30	29	28	27	26	25	24	23	22	21	20	19	18	17	16
Res.	Res.	Res.	Res.	Res.	Res.	Res.	Res.	Res.	Res.	Res.	Res.	Res.	Res.	Res.	Res.
15	14	13	12	11	10	9	8	7	6	5	4	3	2	1	0
Res.	Res.	Res.	Res.	Res.	Res.	Res.	Res.	KEY[7:0]							
								w	w	w	w	w	w	w	w

Bits 31:8 Reserved, must be kept at reset value.

Bits 7:0 **KEY[7:0]**: SRAM2 write protection key for software erase

The following steps are required to unlock the write protection of the SRAM2ER bit in the SYSCFG_CFGR2 register.

1. Write 0xCA into Key[7:0]
2. Write 0x53 into Key[7:0]

Writing a wrong key reactivates the write protection.

10.2.11 SYSCFG SRAM2 write protection register 2 (SYSCFG_SWPR2)

Address offset: 0x028

System reset value: 0x0000 0000

31	30	29	28	27	26	25	24	23	22	21	20	19	18	17	16
Res.	Res.	Res.	Res.	Res.	Res.	Res.	Res.	Res.	Res.	Res.	Res.	Res.	Res.	Res.	Res.
15	14	13	12	11	10	9	8	7	6	5	4	3	2	1	0
Res.	Res.	Res.	Res.	Res.	Res.	Res.	Res.	Res.	Res.	Res.	Res.	P35WP	P34WP	P33WP	P32WP
												rs	rs	rs	rs

Bits 31:4 Reserved, must be kept at reset value.

Bits 3:0 **PxWP** (x= 32 to 35): SRAM2 1 Kbyte page x write protection
These bits are set by software and cleared only by a system reset.
0: Write protection of SRAM2 1 Kbyte page x is disabled.
1: Write protection of SRAM2 1 Kbyte page x is enabled.

10.2.12 SYSCFG CPU1 interrupt mask register 1 (SYSCFG_IMR1)

Address offset: 0x100

System reset value: 0x0000 0000

31	30	29	28	27	26	25	24	23	22	21	20	19	18	17	16
EXTI15 IM	EXTI14 IM	EXTI13 IM	EXTI12 IM	EXTI11I M	EXTI10 IM	EXTI9 IM	EXTI8 IM	EXTI7 IM	EXTI6 IM	EXTI5 IM	Res.	Res.	Res.	Res.	Res.
rw	rw	rw	rw	rw	rw	rw	rw	rw	rw	rw					
15	14	13	12	11	10	9	8	7	6	5	4	3	2	1	0
Res.	Res.	TIM1 IM	Res.	Res.	Res.	Res.	Res.	Res.	Res.	Res.	Res.	Res.	Res.	Res.	Res.
		rw													

Bits 31:21 **xxxIM**: Peripheral xxx interrupt mask to CPU1
0: Peripheral xxx interrupt forwarded to CPU1
1. Peripheral xxx interrupt to CPU1 masked.

Bits 20:14 Reserved, must be kept at reset value.

Bit 13 **TIM1IM**: Peripheral TIM1 interrupt mask to CPU1
0: Peripheral TIM1 interrupt forwarded to CPU1
1. Peripheral TIM1 interrupt to CPU1 masked.

10.2.13 SYSCFG CPU1 interrupt mask register 2 (SYSCFG_IMR2)

Address offset: 0x104

System reset value: 0x0000 0000

31	30	29	28	27	26	25	24	23	22	21	20	19	18	17	16
Res.	Res.	Res.	Res.	Res.	Res.	Res.	Res.	Res.	Res.	Res.	PVDIM	Res.	PVM3IM	Res.	Res.
											rw		rw		
15	14	13	12	11	10	9	8	7	6	5	4	3	2	1	0
Res.	Res.	Res.	Res.	Res.	Res.	Res.	Res.	Res.	Res.	Res.	Res.	Res.	Res.	Res.	Res.

Bits 31:21 Reserved, must be kept at reset value.

Bit 20 **xxxIM**: Peripheral xxx interrupt mask to CPU1
0: Peripheral xxx interrupt forwarded to CPU1
1. Peripheral xxx interrupt to CPU1 masked.

Bit 19 Reserved, must be kept at reset value.

Bit 18 **xxxIM**: Peripheral xxx interrupt mask to CPU1
0: Peripheral xxx interrupt forwarded to CPU1
1. Peripheral xxx interrupt to CPU1 masked.

Bits 17:0 Reserved, must be kept at reset value.

10.2.14 SYSCFG CPU2 interrupt mask register 1 (SYSCFG_C2IMR1)

Address offset: 0x108

System reset value: 0x0000 0000

31	30	29	28	27	26	25	24	23	22	21	20	19	18	17	16
EXTI15 IM	EXTI14 IM	EXTI13 IM	EXTI12 IM	EXTI11 IM	EXTI10 IM	EXTI9 IM	EXTI8 IM	EXTI7 IM	EXTI6 IM	EXTI5 IM	EXTI4 IM	EXTI3 IM	EXTI2 IM	EXTI1 IM	EXTI0 IM
rw	rw	rw	rw	rw	rw	rw	rw	rw	rw	rw	rw	rw	rw	rw	rw
15	14	13	12	11	10	9	8	7	6	5	4	3	2	1	0
Res.	Res.	Res.	ADC IM	COMP IM	Res.	RNG IM	PKA IM	Res.	FLASH IM	RCC IM	RTC ALARM IM	RTC WKUP IM	Res.	Res.	RTC STAMP TAMP LSECSS IM
			rw	rw		rw	rw		rw	rw	rw	rw			rw

Bits 31:16 **xxxIM**: Peripheral xxx interrupt mask to CPU2
0: Peripheral xxx interrupt forwarded to CPU2
1. Peripheral xxx interrupt to CPU2 masked.

Bits 15:13 Reserved, must be kept at reset value.

Bits 12:11 **xxxIM**: Peripheral xxx interrupt mask to CPU2
0: Peripheral xxx interrupt forwarded to CPU2
1. Peripheral xxx interrupt to CPU2 masked.

Bit 10 Reserved, must be kept at reset value.

Bits 9:8 **xxxIM**: Peripheral xxx interrupt mask to CPU2
0: Peripheral xxx interrupt forwarded to CPU2
1. Peripheral xxx interrupt to CPU2 masked.

Bit 7 Reserved, must be kept at reset value.

Bits 6:3 **xxxIM**: Peripheral xxx interrupt mask to CPU2
0: Peripheral xxx interrupt forwarded to CPU2
1. Peripheral xxx interrupt to CPU2 masked.

Bits 2:1 Reserved, must be kept at reset value.

Bit 0 **xxxIM**: Peripheral xxx interrupt mask to CPU2
0: Peripheral xxx interrupt forwarded to CPU2
1. Peripheral xxx interrupt to CPU2 masked.

10.2.15 SYSCFG CPU2 interrupt mask register 2 (SYSCFG_C2IMR2)

Address offset: 0x10C

System reset value: 0x0000 0000

31	30	29	28	27	26	25	24	23	22	21	20	19	18	17	16
Res.	Res.	Res.	Res.	Res.	Res.	Res.	Res.	Res.	Res.	TSC IM	PVD IM	Res.	PVM3 IM	Res.	Res.
										rw	rw		rw		

15	14	13	12	11	10	9	8	7	6	5	4	3	2	1	0
DMA MUX1 IM	Res.	Res.	Res.	Res.	Res.	Res.	Res.	Res.	DMA1 CH7 IM	DMA1 CH6 IM	DMA1 CH5 IM	DMA1 CH4 IM	DMA1 CH3 IM	DMA1 CH2 IM	DMA1 CH1 IM
rw									rw	rw	rw	rw	rw	rw	rw

Bits 31:22 Reserved, must be kept at reset value.

Bits 21:20 **xxxIM**: Peripheral xxx interrupt mask to CPU2
0: Peripheral xxx interrupt forwarded to CPU2
1. Peripheral xxx interrupt to CPU2 masked.

Bit 19 Reserved, must be kept at reset value.

Bit 18 **xxxIM**: Peripheral xxx interrupt mask to CPU2
0: Peripheral xxx interrupt forwarded to CPU2
1. Peripheral xxx interrupt to CPU2 masked.

Bits 17:16 Reserved, must be kept at reset value.

Bit15 **xxxIM**: Peripheral xxx interrupt mask to CPU2
0: Peripheral xxx interrupt forwarded to CPU2
1. Peripheral xxx interrupt to CPU2 masked.

Bits 14:7 Reserved, must be kept at reset value.

Bits 6:0 **xxxIM**: Peripheral xxx interrupt mask to CPU2
0: Peripheral xxx interrupt forwarded to CPU2
1. Peripheral xxx interrupt to CPU2 masked.

10.2.16 SYSCFG secure IP control register (SYSCFG_SIPCR)

Address offset: 0x110

System reset value: 0x0000 0000

This register provides write access security and can only be written by the CPU2. A write access from the CPU1 is ignored and a bus error is generated. On any read access the register value is returned.

31	30	29	28	27	26	25	24	23	22	21	20	19	18	17	16
Res.	Res.	Res.	Res.	Res.	Res.	Res.	Res.	Res.	Res.	Res.	Res.	Res.	Res.	Res.	Res.

15	14	13	12	11	10	9	8	7	6	5	4	3	2	1	0
Res.	Res.	Res.	Res.	Res.	Res.	Res.	Res.	Res.	Res.	Res.	Res.	SRNG	SPKA	SAES2	Res.
												rw	rw	rw	

Bits 31:4 Reserved, must be kept at reset value.

Bit 3 **SRNG**: Enable true RNG security

0: True RNG security disabled (RNG registers can be accessed by both CPU1 and CPU2)

1: True RNG security enabled (RNG registers can only be accessed by the CPU2. Write accesses by the CPU1 generate a bus error, read access return 0 value).

Bit 2 **SPKA**: Enable PKA security

0: PKA security disabled (PKA registers can be accessed by both CPU1 and CPU2)

1: PKA security enabled. PKA registers can only be accessed by the CPU2. Write accesses by the CPU1 generate a bus error, read access return 0 value. When this bis is set and a system reset occurs (including a reset due to wakeup from Standby) the PKA RAM is erased.

Bit 1 **SAES2**: Enable AES2 security

0: AES2 security disabled (AES2 registers can be accessed by both CPU1 and CPU2)

1: AES2 security enabled. (AES2 registers can only be accessed by the CPU2. Write accesses by the CPU1 generate a bus error, read access return 0 value).

Bit 0 Reserved, must be kept at reset value.

10.2.17 SYSCFG register map

The following table summarizes the SYSCFG register map and the reset values.

Table 43. SYSCFG register map and reset values

Offset	Register	31	30	29	28	27	26	25	24	23	22	21	20	19	18	17	16	15	14	13	12	11	10	9	8	7	6	5	4	3	2	1	0
0x000	**SYSCFG_ MEMRMP**	Res.	Res.	Res.	Res.	Res.	Res.	Res.	Res.	Res.	Res.	Res.	Res.	Res.	Res.	Res.	Res.	Res.	Res.	Res.	Res.	Res.	Res.	Res.	Res.	Res.	Res.	Res.	Res.	Res.	MEM_MODE [2:0]		
	Reset value																														x	x	x
0x004	**SYSCFG_CFGR1**	FPU_IE[5..0]						Res.	Res.	Res.	Res.	Res.	I2C1_FMP	I2C_PB9_FMP	I2C_PB8_FMP	I2C_PB7_FMP	I2C_PB6_FMP	Res.	Res.	Res.	Res.	Res.	Res.	Res.	BOOSTEN	Res.	Res.	Res.	Res.	Res.	Res.	Res.	Res.
	Reset value	0	1	1	1	1	1						0	0	0	0	0								0								
0x008	**SYSCFG_EXTICR1**	Res.	Res.	Res.	Res.	Res.	Res.	Res.	Res.	Res.	Res.	Res.	Res.	Res.	Res.	Res.	Res.	Res.	EXTI3 [2:0]			Res.	EXTI2 [2:0]			Res.	EXTI1 [2:0]			Res.	EXTI0 [2:0]		
	Reset value																		0	0	0		0	0	0		0	0	0		0	0	0
0x00C	**SYSCFG_EXTICR2**	Res.	Res.	Res.	Res.	Res.	Res.	Res.	Res.	Res.	Res.	Res.	Res.	Res.	Res.	Res.	Res.	Res.	EXTI7 [2:0]			Res.	EXTI6 [2:0]			Res.	EXTI5 [2:0]			Res.	EXTI4 [2:0]		
	Reset value																		0	0	0		0	0	0		0	0	0		0	0	0
0x010	**SYSCFG_EXTICR3**	Res.	Res.	Res.	Res.	Res.	Res.	Res.	Res.	Res.	Res.	Res.	Res.	Res.	Res.	Res.	Res.	Res.	EXTI11 [2:0]			Res.	EXTI10 [2:0]			Res.	EXTI9 [2:0]			Res.	EXTI8 [2:0]		
	Reset value																		0	0	0		0	0	0		0	0	0		0	0	0
0x014	**SYSCFG_EXTICR4**	Res.	Res.	Res.	Res.	Res.	Res.	Res.	Res.	Res.	Res.	Res.	Res.	Res.	Res.	Res.	Res.	Res.	EXTI15 [2:0]			Res.	EXTI14 [2:0]			Res.	EXTI13 [2:0]			Res.	EXTI12 [2:0]		
	Reset value																		0	0	0		0	0	0		0	0	0		0	0	0
0x018	**SYSCFG_SCSR**	C2RFD	Res.	Res.	Res.	Res.	Res.	Res.	Res.	Res.	Res.	Res.	Res.	Res.	Res.	Res.	Res.	Res.	Res.	Res.	Res.	Res.	Res.	Res.	Res.	Res.	Res.	Res.	Res.	Res.	Res.	SRAM2BS	SRAM2ER
	Reset value	0																														0	0
0x01C	**SYSCFG_CFGR2**	Res.	Res.	Res.	Res.	Res.	Res.	Res.	Res.	Res.	Res.	Res.	Res.	Res.	Res.	Res.	Res.	Res.	Res.	Res.	Res.	Res.	Res.	Res.	SPF	Res.	Res.	Res.	Res.	ECCL	PVDL	SPL	CLL
	Reset value																								0					0	0	0	0
0x020	**SYSCFG_SWPR**	P31WP	P30WP	P29WP	P28WP	P27WP	P26WP	P25WP	P24WP	P23WP	P22WP	P21WP	P20WP	P19WP	P18WP	P17WP	P16WP	P15WP	P14WP	P13WP	P12WP	P11WP	P10WP	P9WP	P8WP	P7WP	P6WP	P5WP	P4WP	P3WP	P2WP	P1WP	P0WP
	Reset value	0	0	0	0	0	0	0	0	0	0	0	0	0	0	0	0	0	0	0	0	0	0	0	0	0	0	0	0	0	0	0	0
0x024	**SYSCFG_SKR**	Res.	Res.	Res.	Res.	Res.	Res.	Res.	Res.	Res.	Res.	Res.	Res.	Res.	Res.	Res.	Res.	Res.	Res.	Res.	Res.	Res.	Res.	Res.	Res.	KEY							
	Reset value																									0	0	0	0	0	0	0	0
0x028	**SYSCFG_SWPR2**	Res.	Res.	Res.	Res.	Res.	Res.	Res.	Res.	Res.	Res.	Res.	Res.	Res.	Res.	Res.	Res.	Res.	Res.	Res.	Res.	Res.	Res.	Res.	Res.	Res.	Res.	Res.	Res.	P35WP	P34WP	P33WP	P32WP
	Reset value																													0	0	0	0

Table 43. SYSCFG register map and reset values (continued)

Offset	Register	31	30	29	28	27	26	25	24	23	22	21	20	19	18	17	16	15	14	13	12	11	10	9	8	7	6	5	4	3	2	1	0
0x100	**SYSCFG_IMR1**	EXTI15IM	EXTI14IM	EXTI13IM	EXTI12IM	EXTI11IM	EXTI10IM	EXTI9IM	EXTI8IM	EXTI7IM	EXTI6IM	EXTI5IM	Res.	Res.	Res.	Res.	Res.			TIM11IM	Res.	Res.	Res.	Res.	Res.	Res.	Res.	Res.	Res.	Res.	Res.	Res.	Res.
	Reset value	0	0	0	0	0	0	0	0	0	0	0								0													
0x104	**SYSCFG_IMR2**	Res.	Res.	Res.	Res.	Res.	Res.	Res.	Res.	Res.	Res.	Res.	PVDIM	Res.	PVM3IM	Res.	Res.	Res.	Res.	Res.	Res.	Res.	Res.	Res.	Res.	Res.	Res.	Res.	Res.	Res.	Res.	Res.	Res.
	Reset value												0		0																		
0x108	**SYSCFG_C2IMR1**	EXTI15IM	EXTI14IM	EXTI13IM	EXTI12IM	EXTI11IM	EXTI10IM	EXTI9IM	EXTI8IM	EXTI7IM	EXTI6IM	EXTI5IM	EXTI4IM	EXTI3IM	EXTI2IM	EXTI1IM	EXTI0IM	Res.	Res.	Res.	ADCIM			RNGIM	PKAIM	Res.	FLASHIM	RCCIM	RTCALARMIM	RTCWKUPIM	Res.	Res.	RTCSTAMPTAMPLSECSSIM
	Reset value	0	0	0	0	0	0	0	0	0	0	0	0	0	0	0	0				0			0	0		0	0	0	0			0
0x10C	**SYSCFG_C2IMR2**	Res.	Res.	Res.	Res.	Res.	Res.	Res.	Res.	Res.	Res.	TSCIM	PVDIM	Res.	PVM3IM	Res.	Res.	DMAMUX1IM	Res.	Res.	Res.	Res.	Res.	Res.	Res.	Res.	DMA1CH7IM	DMA1CH6IM	DMA1CH5IM	DMA1CH4IM	DMA1CH3IM	DMA1CH2IM	DMA1CH1IM
	Reset value												0		0			0									0	0	0	0	0	0	0
0x110	**SYSCFG_SIPCR**	Res.	Res.	Res.	Res.	Res.	Res.	Res.	Res.	Res.	Res.	Res.	Res.	Res.	Res.	Res.	Res.	Res.	Res.	Res.	Res.	Res.	Res.	Res.	Res.	Res.	Res.	Res.	Res.	SRNG	SPKA	SAES2	Res.
	Reset value																													0	0	0	

Refer to *Section 2.2 on page 55* for the register boundary addresses.

11 Direct memory access controller (DMA)

11.1 Introduction

The direct memory access (DMA) controller is a bus master and system peripheral.

The DMA is used to perform programmable data transfers between memory-mapped peripherals and/or memories, upon the control of an off-loaded CPU.

The DMA controller features a single AHB master architecture.

There is one instance of DMA with 7 channels.

Each channel is dedicated to managing memory access requests from one or more peripherals. The DMA includes an arbiter for handling the priority between DMA requests.

11.2 DMA main features

- Single AHB master
- Peripheral-to-memory, memory-to-peripheral, memory-to-memory, and peripheral-to-peripheral data transfers
- Access, as source and destination, to on-chip memory-mapped devices such as flash memory, SRAM, and AHB and APB peripherals
- All DMA channels are independently configurable:
  - Each channel is associated either with a DMA request signal coming from a peripheral, or with a software trigger in memory-to-memory transfers. This configuration is done by software.
  - Priority between the requests is programmable by software (four levels per channel: very high, high, medium, low) and by hardware in case of equality (such as request to channel 1 has priority over request to channel 2).
  - Transfer size of source and destination are independent (byte, half-word, word), emulating packing and unpacking. Source and destination addresses must be aligned on the data size.
  - Support of transfers from/to peripherals to/from memory with circular buffer management
  - Programmable number of data to be transferred: 0 to 2^{16} - 1
- Generation of an interrupt request per channel. Each interrupt request is caused from any of the three DMA events: transfer complete, half transfer, or transfer error.

11.3 DMA implementation

11.3.1 DMA1

DMA1 is implemented with the hardware configuration parameters shown in the table below.

Table 44. DMA implementation

Feature	DMA
Number of channels	7

11.3.2 DMA request mapping

For the mapping of the different requests, refer to the DMAMUX section.

11.4 DMA functional description

11.4.1 DMA block diagram

The DMA block diagram is shown in the figure below.

Figure 23. DMA block diagram

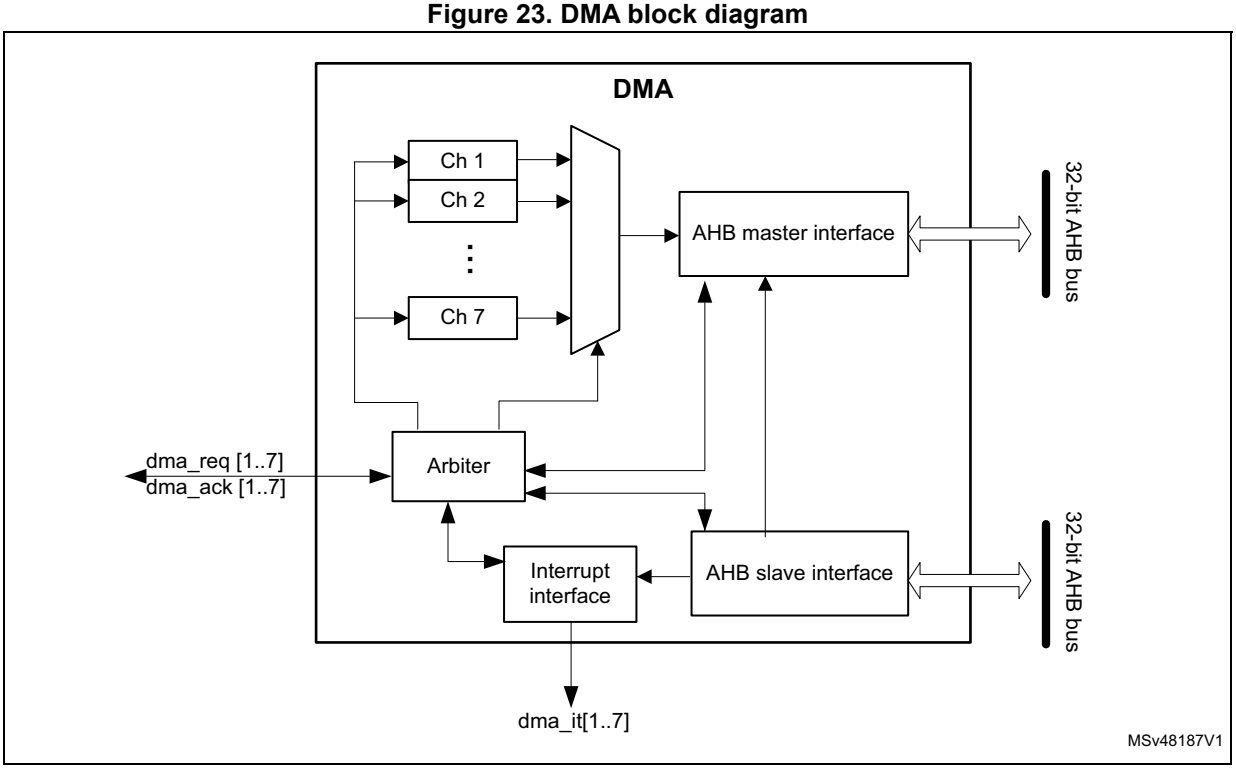

The DMA controller performs direct memory transfer by sharing the AHB system bus with other system masters. The bus matrix implements round-robin scheduling. DMA requests may stop the CPU access to the system bus for a number of bus cycles, when CPU and DMA target the same destination (memory or peripheral).

According to its configuration through the AHB slave interface, the DMA controller arbitrates between the DMA channels and their associated received requests. The DMA controller also schedules the DMA data transfers over the single AHB port master.

The DMA controller generates an interrupt per channel to the interrupt controller.

11.4.2 DMA pins and internal signals

Table 45. DMA internal input/output signals

Signal name	Signal type	Description
dma_req[x]	Input	DMA channel x request
dma_ack[x]	Output	DMA channel x acknowledge
dma_it[x]	Output	DMA channel x interrupt

11.4.3 DMA transfers

The software configures the DMA controller at channel level, to perform a block transfer, composed of a sequence of AHB bus transfers.

A DMA block transfer may be requested from a peripheral, or triggered by the software in case of memory-to-memory transfer.

After an event, the following steps of a single DMA transfer occur:

1. The peripheral sends a single DMA request signal to the DMA controller.
2. The DMA controller serves the request, depending on the priority of the channel associated to this peripheral request.
3. As soon as the DMA controller grants the peripheral, an acknowledge is sent to the peripheral by the DMA controller.
4. The peripheral releases its request as soon as it gets the acknowledge from the DMA controller.
5. Once the request is deasserted by the peripheral, the DMA controller releases the acknowledge.

The peripheral may order a further single request and initiate another single DMA transfer.

The request/acknowledge protocol is used when a peripheral is either the source or the destination of the transfer. For example, in case of memory-to-peripheral transfer, the peripheral initiates the transfer by driving its single request signal to the DMA controller. The DMA controller reads then a single data in the memory and writes this data to the peripheral.

For a given channel x, a DMA block transfer consists of a repeated sequence of:

- a single DMA transfer, encapsulating two AHB transfers of a single data, over the DMA AHB bus master:
  - a single data read (byte, half-word, or word) from the peripheral data register or a location in the memory, addressed through an internal current peripheral/memory address register.
    The start address used for the first single transfer is the base address of the peripheral or memory, and is programmed in the DMA_CPARx or DMA_CMARx register.
  - a single data write (byte, half-word, or word) to the peripheral data register or a location in the memory, addressed through an internal current peripheral/memory

address register.
The start address used for the first transfer is the base address of the peripheral or memory, and is programmed in the DMA_CPARx or DMA_CMARx register.

- postdecrementing of the programmed DMA_CNDTRx register
  This register contains the remaining number of data items to transfer (number of AHB 'read followed by write' transfers).

This sequence is repeated until DMA_CNDTRx is null.

Note: The AHB master bus source/destination address must be aligned with the programmed size of the transferred single data to the source/destination.

11.4.4 DMA arbitration

The DMA arbiter manages the priority between the different channels.

When an active channel x is granted by the arbiter (hardware requested or software triggered), a single DMA transfer is issued (such as an AHB 'read followed by write' transfer of a single data). Then, the arbiter considers again the set of active channels and selects the one with the highest priority.

The priorities are managed in two stages:

- software: priority of each channel is configured in the DMA_CCRx register, to one of the four different levels:
  - very high
  - high
  - medium
  - low
- hardware: if two requests have the same software priority level, the channel with the lowest index gets priority. For example, channel 2 gets priority over channel 4.

When a channel x is programmed for a block transfer in memory-to-memory mode, re arbitration is considered between each single DMA transfer of this channel x. Whenever there is another concurrent active requested channel, the DMA arbiter automatically alternates and grants the other highest-priority requested channel, which may be of lower priority than the memory-to-memory channel.

11.4.5 DMA channels

Each channel may handle a DMA transfer between a peripheral register located at a fixed address, and a memory address. The number of data items to transfer is programmable. The register that contains the number of data items to transfer is decremented after each transfer.

A DMA channel is programmed at block transfer level.

Programmable data sizes

The transfer sizes of a single data (byte, half-word, or word) to the peripheral and memory are programmable through, respectively, the PSIZE[1:0] and MSIZE[1:0] fields of the DMA_CCRx register.

Pointer incrementation

The peripheral and memory pointers may be automatically incremented after each transfer, depending on the PINC and MINC bits of the DMA_CCRx register.

If the **incremented mode** is enabled (PINC or MINC set to 1), the address of the next transfer is the address of the previous one incremented by 1, 2 or 4, depending on the data size defined in PSIZE[1:0] or MSIZE[1:0]. The first transfer address is the one programmed in the DMA_CPARx or DMA_CMARx register. During transfers, these registers keep the initially programmed value. The current transfer addresses (in the current internal peripheral/memory address register) are not accessible by software.

If the channel x is configured in **noncircular mode**, no DMA request is served after the last data transfer (once the number of single data to transfer reaches zero). The DMA channel must be disabled to reload a new number of data items into the DMA_CNDTRx register.

Note: If the channel x is disabled, the DMA registers are not reset. The DMA channel registers (DMA_CCRx, DMA_CPARx and DMA_CMARx) retain the initial values programmed during the channel configuration phase.

In **circular mode**, after the last data transfer, the DMA_CNDTRx register is automatically reloaded with the initially programmed value. The current internal address registers are reloaded with the base address values from the DMA_CPARx and DMA_CMARx registers.

Channel configuration procedure

The following sequence is needed to configure a DMA channel x:

1. Set the peripheral register address in the DMA_CPARx register.
   The data is moved from/to this address to/from the memory after the peripheral event, or after the channel is enabled in memory-to-memory mode.
2. Set the memory address in the DMA_CMARx register.
   The data is written to/read from the memory after the peripheral event or after the channel is enabled in memory-to-memory mode.
3. Configure the total number of data to transfer in the DMA_CNDTRx register.
   After each data transfer, this value is decremented.
4. Configure the parameters listed below in the DMA_CCRx register:
   - the channel priority
   - the data transfer direction
   - the circular mode
   - the peripheral and memory incremented mode
   - the peripheral and memory data size
   - the interrupt enable at half and/or full transfer and/or transfer error
5. Activate the channel by setting the EN bit in the DMA_CCRx register.

A channel, as soon as enabled, may serve any DMA request from the peripheral connected to this channel, or may start a memory-to-memory block transfer.

Note: The two last steps of the channel configuration procedure may be merged into a single access to the DMA_CCRx register, to configure and enable the channel.

Channel state and disabling a channel

A channel x in the active state is an enabled channel (read DMA_CCRx.EN = 1). An active channel x is a channel that must have been enabled by the software (DMA_CCRx.EN set

to 1) and afterwards with no occurred transfer error (DMA_ISR.TEIFx = 0). In case there is a transfer error, the channel is automatically disabled by hardware (DMA_CCRx.EN = 0).

The three following use cases may happen:

- Suspend and resume a channel

  This corresponds to the two following actions:

  – An active channel is disabled by software (writing DMA_CCRx.EN = 0 whereas DMA_CCRx.EN = 1).

  – The software enables the channel again (DMA_CCRx.EN set to 1) without reconfiguring the other channel registers (such as DMA_CNDTRx, DMA_CPARx and DMA_CMARx).

  This case is not supported by the DMA hardware, which does not guarantee that the remaining data transfers are performed correctly.

- Stop and abort a channel

  If the application does not need anymore the channel, this active channel can be disabled by software. The channel is stopped and aborted but the DMA_CNDTRx register content may not correctly reflect the remaining data transfers versus the aborted source and destination buffer/register.

- Abort and restart a channel

  This corresponds to the software sequence: disable an active channel, then reconfigure the channel and enable it again.

  This is supported by the hardware if the following conditions are met:

  – The application guarantees that, when the software is disabling the channel, a DMA data transfer is not occurring at the same time over its master port. For example, the application can first disable the peripheral in DMA mode, to ensure that there is no pending hardware DMA request from this peripheral.

  – The software must operate separated write accesses to the same DMA_CCRx register: First disable the channel. Second reconfigure the channel for a next block transfer including the DMA_CCRx if a configuration change is needed. There are read-only DMA_CCRx register fields when DMA_CCRx.EN=1. Finally enable again the channel.

When a channel transfer error occurs, the EN bit of the DMA_CCRx register is cleared by hardware. This EN bit cannot be set again by software to reactivate the channel x, until the TEIFx bit of the DMA_ISR register is set.

Circular mode (in memory-to-peripheral/peripheral-to-memory transfers)

The circular mode is available to handle circular buffers and continuous data flows (such as ADC scan mode). This feature is enabled using the CIRC bit in the DMA_CCRx register.

Note: The circular mode must not be used in memory-to-memory mode. Before enabling a channel in circular mode (CIRC = 1), the software must clear the MEM2MEM bit of the DMA_CCRx register. When the circular mode is activated, the amount of data to transfer is automatically reloaded with the initial value programmed during the channel configuration phase, and the DMA requests continue to be served.

To stop a circular transfer, the software needs to stop the peripheral from generating DMA requests (such as quit the ADC scan mode), before disabling the DMA channel.
The software must explicitly program the DMA_CNDTRx value before starting/enabling a transfer, and after having stopped a circular transfer.

Memory-to-memory mode

The DMA channels may operate without being triggered by a request from a peripheral. This mode is called memory-to-memory mode, and is initiated by software.

If the MEM2MEM bit in the DMA_CCRx register is set, the channel, if enabled, initiates transfers. The transfer stops once the DMA_CNDTRx register reaches zero.

Note: The memory-to-memory mode must not be used in circular mode. Before enabling a channel in memory-to-memory mode (MEM2MEM = 1), the software must clear the CIRC bit of the DMA_CCRx register.

Peripheral-to-peripheral mode

Any DMA channel can operate in peripheral-to-peripheral mode:

- when the hardware request from a peripheral is selected to trigger the DMA channel

  This peripheral is the DMA initiator and paces the data transfer from/to this peripheral to/from a register belonging to another memory-mapped peripheral (this one being not configured in DMA mode).
- when no peripheral request is selected and connected to the DMA channel

  The software configures a register-to-register transfer by setting the MEM2MEM bit of the DMA_CCRx register.

Programming transfer direction, assigning source/destination

The value of the DIR bit of the DMA_CCRx register sets the direction of the transfer, and consequently, it identifies the source and the destination, regardless of the source/destination type (peripheral or memory):

- **DIR = 1** defines typically a memory-to-peripheral transfer. More generally, if DIR = 1:
  - The **source** attributes are defined by the DMA_MARx register, the MSIZE[1:0] field, and the MINC bit of the DMA_CCRx register.
    Regardless of their usual naming, these ‘memory’ register, field, and bit are used to define the source peripheral in peripheral-to-peripheral mode.
  - The **destination** attributes are defined by the DMA_PARx register, the PSIZE[1:0] field and the PINC bit of the DMA_CCRx register.
    Regardless of their usual naming, these ‘peripheral’ register, field, and bit are used to define the destination memory in memory-to-memory mode.
- **DIR = 0** defines typically a peripheral-to-memory transfer. More generally, if DIR = 0:
  - The **source** attributes are defined by the DMA_PARx register, the PSIZE[1:0] field and the PINC bit of the DMA_CCRx register.
    Regardless of their usual naming, these ‘peripheral’ register, field, and bit are used to define the source memory in memory-to-memory mode
  - The **destination** attributes are defined by the DMA_MARx register, the MSIZE[1:0] field and the MINC bit of the DMA_CCRx register.
    Regardless of their usual naming, these ‘memory’ register, field, and bit are used to define the destination peripheral in peripheral-to-peripheral mode.

11.4.6 DMA data width, alignment, and endianness

When PSIZE[1:0] and MSIZE[1:0] are not equal, the DMA controller performs some data alignments as described in the table below.

Table 46. Programmable data width and endian behavior (when PINC = MINC = 1)

Source port width (MSIZE if DIR = 1, else PSIZE)	Destination port width (PSIZE if DIR = 1, else MSIZE)	Number of data items to transfer (NDT)	Source content: address / data (DMA_CMARx if DIR = 1, else DMA_CPARx)	DMA transfers	Destination content: address / data (DMA_CPARx if DIR = 1, else DMA_CMARx)
8	8	4	@0x0 / B0 @0x1 / B1 @0x2 / B2 @0x3 / B3	1: read B0[7:0] @0x0 then write B0[7:0] @0x0 2: read B1[7:0] @0x1 then write B1[7:0] @0x1 3: read B2[7:0] @0x2 then write B2[7:0] @0x2 4: read B3[7:0] @0x3 then write B3[7:0] @0x3	@0x0 / B0 @0x1 / B1 @0x2 / B2 @0x3 / B3
8	16	4	@0x0 / B0 @0x1 / B1 @0x2 / B2 @0x3 / B3	1: read B0[7:0] @0x0 then write 00B0[15:0] @0x0 2: read B1[7:0] @0x1 then write 00B1[15:0] @0x2 3: read B2[7:0] @0x2 then write 00B2[15:0] @0x4 4: read B3[7:0] @0x3 then write 00B3[15:0] @0x6	@0x0 / 00B0 @0x2 / 00B1 @0x4 / 00B2 @0x6 / 00B3
8	32	4	@0x0 / B0 @0x1 / B1 @0x2 / B2 @0x3 / B3	1: read B0[7:0] @0x0 then write 000000B0[31:0] @0x0 2: read B1[7:0] @0x1 then write 000000B1[31:0] @0x4 3: read B2[7:0] @0x2 then write 000000B2[31:0] @0x8 4: read B3[7:0] @0x3 then write 000000B3[31:0] @0xC	@0x0 / 000000B0 @0x4 / 000000B1 @0x8 / 000000B2 @0xC / 000000B3
16	8	4	@0x0 / B1B0 @0x2 / B3B2 @0x4 / B5B4 @0x6 / B7B6	1: read B1B0[15:0] @0x0 then write B0[7:0] @0x0 2: read B3B2[15:0] @0x2 then write B2[7:0] @0x1 3: read B5B4[15:0] @0x4 then write B4[7:0] @0x2 4: read B7B6[15:0] @0x6 then write B6[7:0] @0x3	@0x0 / B0 @0x1 / B2 @0x2 / B4 @0x3 / B6
16	16	4	@0x0 / B1B0 @0x2 / B3B2 @0x4 / B5B4 @0x6 / B7B6	1: read B1B0[15:0] @0x0 then write B1B0[15:0] @0x0 2: read B3B2[15:0] @0x2 then write B3B2[15:0] @0x2 3: read B5B4[15:0] @0x4 then write B5B4[15:0] @0x4 4: read B7B6[15:0] @0x6 then write B7B6[15:0] @0x6	@0x0 / B1B0 @0x2 / B3B2 @0x4 / B5B4 @0x6 / B7B6
16	32	4	@0x0 / B1B0 @0x2 / B3B2 @0x4 / B5B4 @0x6 / B7B6	1: read B1B0[15:0] @0x0 then write 0000B1B0[31:0] @0x0 2: read B3B2[15:0] @0x2 then write 0000B3B2[31:0] @0x4 3: read B5B4[15:0] @0x4 then write 0000B5B4[31:0] @0x8 4: read B7B6[15:0] @0x6 then write 0000B7B6[31:0] @0xC	@0x0 / 0000B1B0 @0x4 / 0000B3B2 @0x8 / 0000B5B4 @0xC / 0000B7B6
32	8	4	@0x0 / B3B2B1B0 @0x4 / B7B6B5B4 @0x8 / BBBAB9B8 @0xC / BFBEBDBC	1: read B3B2B1B0[31:0] @0x0 then write B0[7:0] @0x0 2: read B7B6B5B4[31:0] @0x4 then write B4[7:0] @0x1 3: read BBBAB9B8[31:0] @0x8 then write B8[7:0] @0x2 4: read BFBEBDBC[31:0] @0xC then write BC[7:0] @0x3	@0x0 / B0 @0x1 / B4 @0x2 / B8 @0x3 / BC
32	16	4	@0x0 / B3B2B1B0 @0x4 / B7B6B5B4 @0x8 / BBBAB9B8 @0xC / BFBEBDBC	1: read B3B2B1B0[31:0] @0x0 then write B1B0[15:0] @0x0 2: read B7B6B5B4[31:0] @0x4 then write B5B4[15:0] @0x2 3: read BBBAB9B8[31:0] @0x8 then write B9B8[15:0] @0x4 4: read BFBEBDBC[31:0] @0xC then write BDBC[15:0] @0x6	@0x0 / B1B0 @0x2 / B5B4 @0x4 / B9B8 @0x6 / BDBC
32	32	4	@0x0 / B3B2B1B0 @0x4 / B7B6B5B4 @0x8 / BBBAB9B8 @0xC / BFBEBDBC	1: read B3B2B1B0[31:0] @0x0 then write B3B2B1B0[31:0] @0x0 2: read B7B6B5B4[31:0] @0x4 then write B7B6B5B4[31:0] @0x4 3: read BBBAB9B8[31:0] @0x8 then write BBBAB9B8[31:0] @0x8 4: read BFBEBDBC[31:0] @0xC then write BFBEBDBC[31:0] @0xC	@0x0 / B3B2B1B0 @0x4 / B7B6B5B4 @0x8 / BBBAB9B8 @0xC / BFBEBDBC

Addressing AHB peripherals not supporting byte/half-word write transfers

When the DMA controller initiates an AHB byte or half-word write transfer, the data are duplicated on the unused lanes of the AHB master 32-bit data bus (HWDATA[31:0]).

When the AHB slave peripheral does not support byte or half-word write transfers and does not generate any error, the DMA controller writes the 32 HWDATA bits as shown in the two examples below:

- To write the half-word 0xABCD, the DMA controller sets the HWDATA bus to 0xABCDABCD with a half-word data size (HSIZE = HalfWord in the AHB master bus).
- To write the byte 0xAB, the DMA controller sets the HWDATA bus to 0xABABABAB with a byte data size (HSIZE = Byte in the AHB master bus).

Assuming the AHB/APB bridge is an AHB 32-bit slave peripheral that does not take into account the HSIZE data, any AHB byte or half-word transfer is changed into a 32-bit APB transfer as described below:

- An AHB byte write transfer of 0xB0 to one of the 0x0, 0x1, 0x2, or 0x3 addresses, is converted to an APB word write transfer of 0xB0B0B0B0 to the 0x0 address.
- An AHB half-word write transfer of 0xB1B0 to the 0x0 or 0x2 addresses is converted to an APB word write transfer of 0xB1B0B1B0 to the 0x0 address.

11.4.7 DMA error management

A DMA transfer error is generated when reading from or writing to a reserved address space. When a DMA transfer error occurs during a DMA read or write access, the faulty channel x is automatically disabled through a hardware clear of its EN bit in the corresponding DMA_CCRx register.

The TEIFx bit of the DMA_ISR register is set. An interrupt is then generated if the TEIE bit of the DMA_CCRx register is set.

The EN bit of the DMA_CCRx register cannot be set again by software (channel x reactivated) until the TEIFx bit of the DMA_ISR register is cleared (by setting the CTEIFx bit of the DMA_IFCR register).

When the software is notified with a transfer error over a channel, which involves a peripheral, the software has first to stop this peripheral in DMA mode, in order to disable any pending or future DMA request. Then software may normally reconfigure both the DMA and the peripheral in DMA mode for a new transfer.

11.5 DMA interrupts

An interrupt can be generated on a half transfer, transfer complete, or transfer error for each DMA channel x. Separate interrupt enable bits are available for flexibility.

Table 47. DMA interrupt requests

Interrupt request	Interrupt event	Event flag	Interrupt enable bit
Channel x interrupt	Half transfer on channel x	HTIFx	HTIEx
	Transfer complete on channel x	TCIFx	TCIEx
	Transfer error on channel x	TEIFx	TEIEx
	Half transfer or transfer complete or transfer error on channel x	GIFx	-

11.6 DMA registers

Refer to *Section 1.2* for a list of abbreviations used in register descriptions.

The DMA registers have to be accessed by words (32-bit).

11.6.1 DMA interrupt status register (DMA_ISR)

Address offset: 0x00

Reset value: 0x0000 0000

Every status bit is cleared by hardware when the software sets the corresponding clear bit or the corresponding global clear bit CGIFx, in the DMA_IFCR register.

31	30	29	28	27	26	25	24	23	22	21	20	19	18	17	16
Res.	Res.	Res.	Res.	TEIF7	HTIF7	TCIF7	GIF7	TEIF6	HTIF6	TCIF6	GIF6	TEIF5	HTIF5	TCIF5	GIF5
				r	r	r	r	r	r	r	r	r	r	r	r
15	14	13	12	11	10	9	8	7	6	5	4	3	2	1	0
TEIF4	HTIF4	TCIF4	GIF4	TEIF3	HTIF3	TCIF3	GIF3	TEIF2	HTIF2	TCIF2	GIF2	TEIF1	HTIF1	TCIF1	GIF1
r	r	r	r	r	r	r	r	r	r	r	r	r	r	r	r

Bits 31:28 Reserved, must be kept at reset value.

Bit 27 **TEIF7**: Transfer error (TE) flag for channel 7
0: No TE event
1: A TE event occurred.

Bit 26 **HTIF7**: Half transfer (HT) flag for channel 7
0: No HT event
1: An HT event occurred.

Bit 25 **TCIF7**: Transfer complete (TC) flag for channel 7
0: No TC event
1: A TC event occurred.

Bit 24 **GIF7**: Global interrupt flag for channel 7
0: No TE, HT, or TC event
1: A TE, HT, or TC event occurred.

Bit 23 **TEIF6**: Transfer error (TE) flag for channel 6
0: No TE event
1: A TE event occurred.

Bit 22 **HTIF6**: Half transfer (HT) flag for channel 6
0: No HT event
1:An HT event occurred.

Bit 21 **TCIF6**: Transfer complete (TC) flag for channel 6
0: No TC event
1: A TC event occurred.

Bit 20 **GIF6**: Global interrupt flag for channel 6
0: No TE, HT, or TC event
1: A TE, HT, or TC event occurred.

Bit 19 **TEIF5**: Transfer error (TE) flag for channel 5
0: No TE event
1: A TE event occurred.

Bit 18 **HTIF5**: Half transfer (HT) flag for channel 5
0: No HT event
1: An HT event occurred.

Bit 17 **TCIF5**: Transfer complete (TC) flag for channel 5
0: No TC event
1: A TC event occurred.

Bit 16 **GIF5**: global interrupt flag for channel 5
0: No TE, HT, or TC event
1: A TE, HT, or TC event occurred.

Bit 15 **TEIF4**: Transfer error (TE) flag for channel 4
0: No TE event
1: A TE event occurred.

Bit 14 **HTIF4**: Half transfer (HT) flag for channel 4
0: No HT event
1: An HT event occurred.

Bit 13 **TCIF4**: Transfer complete (TC) flag for channel 4
0: No TC event
1: A TC event occurred.

Bit 12 **GIF4**: global interrupt flag for channel 4
0: No TE, HT, or TC event
1: A TE, HT, or TC event occurred.

Bit 11 **TEIF3**: Transfer error (TE) flag for channel 3
0: No TE event
1: A TE event occurred.

Bit 10 **HTIF3**: Half transfer (HT) flag for channel 3
0: No HT event
1: An HT event occurred.

Bit 9 **TCIF3**: Transfer complete (TC) flag for channel 3
0: No TC event
1: A TC event occurred.

Bit 8 **GIF3**: Global interrupt flag for channel 3
0: No TE, HT, or TC event
1: A TE, HT, or TC event occurred.

Bit 7 **TEIF2**: Transfer error (TE) flag for channel 2
0: No TE event
1: A TE event occurred.

Bit 6 **HTIF2**: Half transfer (HT) flag for channel 2
0: No HT event
1: An HT event occurred.

Bit 5 **TCIF2**: Transfer complete (TC) flag for channel 2
0: No TC event
1: A TC event occurred.

Bit 4 **GIF2**: Global interrupt flag for channel 2
0: No TE, HT, or TC event
1: A TE, HT, or TC event occurred.

Bit 3 **TEIF1**: Transfer error (TE) flag for channel 1
0: No TE event
1: A TE event occurred.

Bit 2 **HTIF1**: Half transfer (HT) flag for channel 1
0: No HT event
1: An HT event occurred.

Bit 1 **TCIF1**: Transfer complete (TC) flag for channel 1
0: No TC event
1: A TC event occurred.

Bit 0 **GIF1**: Global interrupt flag for channel 1
0: No TE, HT, or TC event
1: A TE, HT, or TC event occurred.

11.6.2 DMA interrupt flag clear register (DMA_IFCR)

Address offset: 0x04

Reset value: 0x0000 0000

Setting the global clear bit CGIFx of the channel x in this DMA_IFCR register, causes the DMA hardware to clear the corresponding GIFx bit and any individual flag among TEIFx, HTIFx, TCIFx, in the DMA_ISR register.

Setting any individual clear bit among CTEIFx, CHTIFx, CTCIFx in this DMA_IFCR register, causes the DMA hardware to clear the corresponding individual flag and the global flag GIFx in the DMA_ISR register, provided that none of the two other individual flags is set.

Writing 0 into any flag clear bit has no effect.

31	30	29	28	27	26	25	24	23	22	21	20	19	18	17	16
Res.	Res.	Res.	Res.	CTEIF7	CHTIF7	CTCIF7	CGIF7	CTEIF6	CHTIF6	CTCIF6	CGIF6	CTEIF5	CHTIF5	CTCIF5	CGIF5
				w	w	w	w	w	w	w	w	w	w	w	w
15	14	13	12	11	10	9	8	7	6	5	4	3	2	1	0
CTEIF4	CHTIF4	CTCIF4	CGIF4	CTEIF3	CHTIF3	CTCIF3	CGIF3	CTEIF2	CHTIF2	CTCIF2	CGIF2	CTEIF1	CHTIF1	CTCIF1	CGIF1
w	w	w	w	w	w	w	w	w	w	w	w	w	w	w	w

Bits 31:28 Reserved, must be kept at reset value.

Bit 27 **CTEIF7**: Transfer error flag clear for channel 7

Bit 26 **CHTIF7**: Half transfer flag clear for channel 7

Bit 25 **CTCIF7**: Transfer complete flag clear for channel 7

Bit 24 **CGIF7**: Global interrupt flag clear for channel 7

Bit 23 **CTEIF6**: Transfer error flag clear for channel 6

Bit 22 **CHTIF6**: Half transfer flag clear for channel 6

Bit 21 **CTCIF6**: Transfer complete flag clear for channel 6

Bit 20 **CGIF6**: Global interrupt flag clear for channel 6

Bit 19 **CTEIF5**: Transfer error flag clear for channel 5

Bit 18 **CHTIF5**: Half transfer flag clear for channel 5

Bit 17 **CTCIF5**: Transfer complete flag clear for channel 5

Bit 16 **CGIF5**: Global interrupt flag clear for channel 5

Bit 15 **CTEIF4**: Transfer error flag clear for channel 4

Bit 14 **CHTIF4**: Half transfer flag clear for channel 4

Bit 13 **CTCIF4**: Transfer complete flag clear for channel 4

Bit 12 **CGIF4**: Global interrupt flag clear for channel 4

Bit 11 **CTEIF3**: Transfer error flag clear for channel 3

Bit 10 **CHTIF3**: Half transfer flag clear for channel 3

Bit 9 **CTCIF3**: Transfer complete flag clear for channel 3

Bit 8 **CGIF3**: Global interrupt flag clear for channel 3

Bit 7 **CTEIF2**: Transfer error flag clear for channel 2

Bit 6 **CHTIF2**: Half transfer flag clear for channel 2

Bit 5 **CTCIF2**: Transfer complete flag clear for channel 2

Bit 4 **CGIF2**: Global interrupt flag clear for channel 2

Bit 3 **CTEIF1**: Transfer error flag clear for channel 1

Bit 2 **CHTIF1**: Half transfer flag clear for channel 1

Bit 1 **CTCIF1**: Transfer complete flag clear for channel 1

Bit 0 **CGIF1**: Global interrupt flag clear for channel 1

11.6.3 DMA channel x configuration register (DMA_CCRx)

Address offset: 0x08 + 0x14 * (x - 1), (x = 1 to 7)

Reset value: 0x0000 0000

The register fields/bits MEM2MEM, PL[1:0], MSIZE[1:0], PSIZE[1:0], MINC, PINC, and DIR are read-only when EN = 1.

The states of MEM2MEM and CIRC bits must not be both high at the same time.

31	30	29	28	27	26	25	24	23	22	21	20	19	18	17	16
Res.	Res.	Res.	Res.	Res.	Res.	Res.	Res.	Res.	Res.	Res.	Res.	Res.	Res.	Res.	Res.

15	14	13	12	11	10	9	8	7	6	5	4	3	2	1	0
Res.	MEM2 MEM	PL[1:0]		MSIZE[1:0]		PSIZE[1:0]		MINC	PINC	CIRC	DIR	TEIE	HTIE	TCIE	EN
	rw	rw	rw	rw	rw	rw	rw	rw	rw	rw	rw	rw	rw	rw	rw

Bits 31:15 Reserved, must be kept at reset value.

Bit 14 **MEM2MEM**: Memory-to-memory mode

0: Disabled

1: Enabled

Note: This bit is set and cleared by software. It must not be written when the channel is enabled (EN = 1). It is read-only when the channel is enabled (EN = 1).

Bits 13:12 **PL[1:0]**: Priority level

00: Low

01: Medium

10: High

11: Very high

Note: This bitfield is set and cleared by software. It must not be written when the channel is enabled (EN = 1). It is read-only when the channel is enabled (EN = 1).

Bits 11:10 **MSIZE[1:0]**: Memory size

Defines the data size of each DMA transfer to the identified memory.

In memory-to-memory mode, this bitfield identifies the memory source if DIR = 1 and the memory destination if DIR = 0.

In peripheral-to-peripheral mode, this bitfield identifies the peripheral source if DIR = 1 and the peripheral destination if DIR = 0.

00: 8 bits

01: 16 bits

10: 32 bits

11: Reserved

Note: This bitfield is set and cleared by software. It must not be written when the channel is enabled (EN = 1). It is read-only when the channel is enabled (EN = 1).

Bits 9:8 **PSIZE[1:0]**: Peripheral size

Defines the data size of each DMA transfer to the identified peripheral.

In memory-to-memory mode, this bitfield identifies the memory destination if DIR = 1 and the memory source if DIR = 0.

In peripheral-to-peripheral mode, this bitfield identifies the peripheral destination if DIR = 1 and the peripheral source if DIR = 0.

00: 8 bits

01: 16 bits

10: 32 bits

11: Reserved

Note: This bitfield is set and cleared by software. It must not be written when the channel is enabled (EN = 1). It is read-only when the channel is enabled (EN = 1).

Bit 7 **MINC**: Memory increment mode

Defines the increment mode for each DMA transfer to the identified memory.

In memory-to-memory mode, this bit identifies the memory source if DIR = 1 and the memory destination if DIR = 0.

In peripheral-to-peripheral mode, this bit identifies the peripheral source if DIR = 1 and the peripheral destination if DIR = 0.

0: Disabled

1: Enabled

Note: This bit is set and cleared by software. It must not be written when the channel is enabled (EN = 1). It is read-only when the channel is enabled (EN = 1).

Bit 6 **PINC**: Peripheral increment mode

Defines the increment mode for each DMA transfer to the identified peripheral.

n memory-to-memory mode, this bit identifies the memory destination if DIR = 1 and the memory source if DIR = 0.

In peripheral-to-peripheral mode, this bit identifies the peripheral destination if DIR = 1 and the peripheral source if DIR = 0.

0: Disabled

1: Enabled

Note: This bit is set and cleared by software. It must not be written when the channel is enabled (EN = 1). It is read-only when the channel is enabled (EN = 1).

Bit 5 **CIRC**: Circular mode

0: Disabled

1: Enabled

Note: This bit is set and cleared by software. It must not be written when the channel is enabled (EN = 1). It is not read-only when the channel is enabled (EN = 1).

Bit 4 **DIR**: Data transfer direction

This bit must be set only in memory-to-peripheral and peripheral-to-memory modes.

0: Read from peripheral

– Source attributes are defined by PSIZE and PINC, plus the DMA_CPARx register. This is still valid in a memory-to-memory mode.

– Destination attributes are defined by MSIZE and MINC, plus the DMA_CMARx register. This is still valid in a peripheral-to-peripheral mode.

1: Read from memory

– Destination attributes are defined by PSIZE and PINC, plus the DMA_CPARx register. This is still valid in a memory-to-memory mode.

– Source attributes are defined by MSIZE and MINC, plus the DMA_CMARx register. This is still valid in a peripheral-to-peripheral mode.

Note: This bit is set and cleared by software. It must not be written when the channel is enabled (EN = 1). It is read-only when the channel is enabled (EN = 1).

Bit 3 **TEIE**: Transfer error interrupt enable

0: Disabled

1: Enabled

Note: This bit is set and cleared by software. It must not be written when the channel is enabled (EN = 1). It is not read-only when the channel is enabled (EN = 1).

Bit 2 **HTIE**: Half transfer interrupt enable

0: Disabled

1: Enabled

Note: This bit is set and cleared by software. It must not be written when the channel is enabled (EN = 1). It is not read-only when the channel is enabled (EN = 1).

Bit 1 **TCIE**: Transfer complete interrupt enable

0: Disabled

1: Enabled

Note: This bit is set and cleared by software. It must not be written when the channel is enabled (EN = 1). It is not read-only when the channel is enabled (EN = 1).

Bit 0 **EN**: Channel enable

When a channel transfer error occurs, this bit is cleared by hardware. It can not be set again by software (channel x re-activated) until the TEIFx bit of the DMA_ISR register is cleared (by setting the CTEIFx bit of the DMA_IFCR register).

0: Disabled

1: Enabled

Note: This bit is set and cleared by software.

11.6.4 DMA channel x number of data to transfer register (DMA_CNDTRx)

Address offset: 0x0C + 0x14 * (x - 1), (x = 1 to 7)

Reset value: 0x0000 0000

31	30	29	28	27	26	25	24	23	22	21	20	19	18	17	16
Res.	Res.	Res.	Res.	Res.	Res.	Res.	Res.	Res.	Res.	Res.	Res.	Res.	Res.	Res.	Res.

15	14	13	12	11	10	9	8	7	6	5	4	3	2	1	0
NDT[15:0]															
rw	rw	rw	rw	rw	rw	rw	rw	rw	rw	rw	rw	rw	rw	rw	rw

Bits 31:16 Reserved, must be kept at reset value.

Bits 15:0 **NDT[15:0]**: Number of data to transfer (0 to 2^{16} - 1)

This bitfield is updated by hardware when the channel is enabled:

- It is decremented after each single DMA 'read followed by write' transfer, indicating the remaining amount of data items to transfer.
- It is kept at zero when the programmed amount of data to transfer is reached, if the channel is not in circular mode (CIRC = 0 in the DMA_CCRx register).
- It is reloaded automatically by the previously programmed value, when the transfer is complete, if the channel is in circular mode (CIRC = 1).

If this bitfield is zero, no transfer can be served whatever the channel status (enabled or not).

Note: This bitfield is set and cleared by software. It must not be written when the channel is enabled (EN = 1). It is read-only when the channel is enabled (EN = 1).

11.6.5 DMA channel x peripheral address register (DMA_CPARx)

Address offset: 0x10 + 0x14 * (x - 1), (x = 1 to 7)

Reset value: 0x0000 0000

31	30	29	28	27	26	25	24	23	22	21	20	19	18	17	16
PA[31:16]															
rw	rw	rw	rw	rw	rw	rw	rw	rw	rw	rw	rw	rw	rw	rw	rw
15	14	13	12	11	10	9	8	7	6	5	4	3	2	1	0
PA[15:0]															
rw	rw	rw	rw	rw	rw	rw	rw	rw	rw	rw	rw	rw	rw	rw	rw

Bits 31:0 **PA[31:0]**: Peripheral address

It contains the base address of the peripheral data register from/to which the data is read/written.

When PSIZE[1:0] = 01 (16 bits), bit 0 of PA[31:0] is ignored. Access is automatically aligned to a half-word address.

When PSIZE[1:0] = 10 (32 bits), bits 1 and 0 of PA[31:0] are ignored. Access is automatically aligned to a word address.

In memory-to-memory mode, this bitfield identifies the memory destination address if DIR = 1 and the memory source address if DIR = 0.

In peripheral-to-peripheral mode, this bitfield identifies the peripheral destination address if DIR = 1 and the peripheral source address if DIR = 0.

Note: This bitfield is set and cleared by software. It must not be written when the channel is enabled (EN = 1). It is not read-only when the channel is enabled (EN = 1).

11.6.6 DMA channel x memory address register (DMA_CMARx)

Address offset: 0x14 + 0x14 * (x - 1), (x = 1 to 7)

Reset value: 0x0000 0000

31	30	29	28	27	26	25	24	23	22	21	20	19	18	17	16
MA[31:16]															
rw	rw	rw	rw	rw	rw	rw	rw	rw	rw	rw	rw	rw	rw	rw	rw
15	14	13	12	11	10	9	8	7	6	5	4	3	2	1	0
MA[15:0]															
rw	rw	rw	rw	rw	rw	rw	rw	rw	rw	rw	rw	rw	rw	rw	rw

Bits 31:0 **MA[31:0]**: Peripheral address

It contains the base address of the memory from/to which the data is read/written.

When MSIZE[1:0] = 01 (16 bits), bit 0 of MA[31:0] is ignored. Access is automatically aligned to a half-word address.

When MSIZE[1:0] = 10 (32 bits), bits 1 and 0 of MA[31:0] are ignored. Access is automatically aligned to a word address.

In memory-to-memory mode, this bitfield identifies the memory source address if DIR = 1 and the memory destination address if DIR = 0.

In peripheral-to-peripheral mode, this bitfield identifies the peripheral source address if DIR = 1 and the peripheral destination address if DIR = 0.

Note: This bitfield is set and cleared by software. It must not be written when the channel is enabled (EN = 1). It is not read-only when the channel is enabled (EN = 1).

11.6.7 DMA register map

Table 48. DMA register map and reset values

Offset	Register name	31	30	29	28	27	26	25	24	23	22	21	20	19	18	17	16	15	14	13	12	11	10	9	8	7	6	5	4	3	2	1	0
0x000	DMA_ISR	Res.	Res.	Res.	Res.	TEIF7	HTIF7	TCIF7	GIF7	TEIF6	HTIF6	TCIF6	GIF6	TEIF5	HTIF5	TCIF5	GIF5	TEIF4	HTIF4	TCIF4	GIF4	TEIF3	HTIF3	TCIF3	GIF3	TEIF2	HTIF2	TCIF2	GIF2	TEIF1	HTIF1	TCIF1	GIF1
	Reset value					0	0	0	0	0	0	0	0	0	0	0	0	0	0	0	0	0	0	0	0	0	0	0	0	0	0	0	0
0x004	DMA_IFCR	Res.	Res.	Res.	Res.	CTEIF7	CHTIF7	CTCIF7	CGIF7	CTEIF6	CHTIF6	CTCIF6	CGIF6	CTEIF5	CHTIF5	CTCIF5	CGIF5	CTEIF4	CHTIF4	CTCIF4	CGIF4	CTEIF3	CHTIF3	CTCIF3	CGIF3	CTEIF2	CHTIF2	CTCIF2	CGIF2	CTEIF1	CHTIF1	CTCIF1	CGIF1
	Reset value					0	0	0	0	0	0	0	0	0	0	0	0	0	0	0	0	0	0	0	0	0	0	0	0	0	0	0	0
0x008	DMA_CCR1	Res.	Res.	Res.	Res.	Res.	Res.	Res.	Res.	Res.	Res.	Res.	Res.	Res.	Res.	Res.	Res.	Res.	MEM2MEM	PL[1:0]		MSIZE[1:0]		PSIZE[1:0]		MINC	PINC	CIRC	DIR	TEIE	HTIE	TCIE	EN
	Reset value																		0	0	0	0	0	0	0	0	0	0	0	0	0	0	0
0x00C	DMA_CNDTR1	Res.	Res.	Res.	Res.	Res.	Res.	Res.	Res.	Res.	Res.	Res.	Res.	Res.	Res.	Res.	Res.	NDTR[15:0]															
	Reset value																	0	0	0	0	0	0	0	0	0	0	0	0	0	0	0	0
0x010	DMA_CPAR1	PA[31:0]																															
	Reset value	0	0	0	0	0	0	0	0	0	0	0	0	0	0	0	0	0	0	0	0	0	0	0	0	0	0	0	0	0	0	0	0
0x014	DMA_CMAR1	MA[31:0]																															
	Reset value	0	0	0	0	0	0	0	0	0	0	0	0	0	0	0	0	0	0	0	0	0	0	0	0	0	0	0	0	0	0	0	0
0x018	Reserved	Reserved.																															

Table 48. DMA register map and reset values (continued)

Offset	Register name	31	30	29	28	27	26	25	24	23	22	21	20	19	18	17	16	15	14	13	12	11	10	9	8	7	6	5	4	3	2	1	0
0x01C	DMA_CCR2	Res.	Res.	Res.	Res.	Res.	Res.	Res.	Res.	Res.	Res.	Res.	Res.	Res.	Res.	Res.	Res.	Res.	MEM2MEM	PL[1:0]		MSIZE[1:0]		PSIZE[1:0]		MINC	PINC	CIRC	DIR	TEIE	HTIE	TCIE	EN
	Reset value																		0	0	0	0	0	0	0	0	0	0	0	0	0	0	0
0x020	DMA_CNDTR2	Res.	Res.	Res.	Res.	Res.	Res.	Res.	Res.	Res.	Res.	Res.	Res.	Res.	Res.	Res.	Res.	NDTR[15:0]															
	Reset value																	0	0	0	0	0	0	0	0	0	0	0	0	0	0	0	0
0x024	DMA_CPAR2	PA[31:0]																															
	Reset value	0	0	0	0	0	0	0	0	0	0	0	0	0	0	0	0	0	0	0	0	0	0	0	0	0	0	0	0	0	0	0	0
0x028	DMA_CMAR2	MA[31:0]																															
	Reset value	0	0	0	0	0	0	0	0	0	0	0	0	0	0	0	0	0	0	0	0	0	0	0	0	0	0	0	0	0	0	0	0
0x02C	Reserved	Reserved.																															
0x030	DMA_CCR3	Res.	Res.	Res.	Res.	Res.	Res.	Res.	Res.	Res.	Res.	Res.	Res.	Res.	Res.	Res.	Res.	Res.	MEM2MEM	PL[1:0]		MSIZE[1:0]		PSIZE[1:0]		MINC	PINC	CIRC	DIR	TEIE	HTIE	TCIE	EN
	Reset value																		0	0	0	0	0	0	0	0	0	0	0	0	0	0	0
0x034	DMA_CNDTR3	Res.	Res.	Res.	Res.	Res.	Res.	Res.	Res.	Res.	Res.	Res.	Res.	Res.	Res.	Res.	Res.	NDTR[15:0]															
	Reset value																	0	0	0	0	0	0	0	0	0	0	0	0	0	0	0	0
0x038	DMA_CPAR3	PA[31:0]																															
	Reset value	0	0	0	0	0	0	0	0	0	0	0	0	0	0	0	0	0	0	0	0	0	0	0	0	0	0	0	0	0	0	0	0
0x03C	DMA_CMAR3	MA[31:0]																															
	Reset value	0	0	0	0	0	0	0	0	0	0	0	0	0	0	0	0	0	0	0	0	0	0	0	0	0	0	0	0	0	0	0	0
0x040	Reserved	Reserved.																															
0x044	DMA_CCR4	Res.	Res.	Res.	Res.	Res.	Res.	Res.	Res.	Res.	Res.	Res.	Res.	Res.	Res.	Res.	Res.	Res.	MEM2MEM	PL[1:0]		MSIZE[1:0]		PSIZE[1:0]		MINC	PINC	CIRC	DIR	TEIE	HTIE	TCIE	EN
	Reset value																		0	0	0	0	0	0	0	0	0	0	0	0	0	0	0
0x048	DMA_CNDTR4	Res.	Res.	Res.	Res.	Res.	Res.	Res.	Res.	Res.	Res.	Res.	Res.	Res.	Res.	Res.	Res.	NDTR[15:0]															
	Reset value																	0	0	0	0	0	0	0	0	0	0	0	0	0	0	0	0
0x04C	DMA_CPAR4	PA[31:0]																															
	Reset value	0	0	0	0	0	0	0	0	0	0	0	0	0	0	0	0	0	0	0	0	0	0	0	0	0	0	0	0	0	0	0	0
0x050	DMA_CMAR4	MA[31:0]																															
	Reset value	0	0	0	0	0	0	0	0	0	0	0	0	0	0	0	0	0	0	0	0	0	0	0	0	0	0	0	0	0	0	0	0
0x054	Reserved	Reserved.																															
0x058	DMA_CCR5	Res.	Res.	Res.	Res.	Res.	Res.	Res.	Res.	Res.	Res.	Res.	Res.	Res.	Res.	Res.	Res.	Res.	MEM2MEM	PL[1:0]		MSIZE[1:0]		PSIZE[1:0]		MINC	PINC	CIRC	DIR	TEIE	HTIE	TCIE	EN
	Reset value																		0	0	0	0	0	0	0	0	0	0	0	0	0	0	0
0x05C	DMA_CNDTR5	Res.	Res.	Res.	Res.	Res.	Res.	Res.	Res.	Res.	Res.	Res.	Res.	Res.	Res.	Res.	Res.	NDTR[15:0]															
	Reset value																	0	0	0	0	0	0	0	0	0	0	0	0	0	0	0	0
0x060	DMA_CPAR5	PA[31:0]																															
	Reset value	0	0	0	0	0	0	0	0	0	0	0	0	0	0	0	0	0	0	0	0	0	0	0	0	0	0	0	0	0	0	0	0
0x064	DMA_CMAR5	MA[31:0]																															
	Reset value	0	0	0	0	0	0	0	0	0	0	0	0	0	0	0	0	0	0	0	0	0	0	0	0	0	0	0	0	0	0	0	0
0x068	Reserved	Reserved.																															
0x06C	DMA_CCR6	Res.	Res.	Res.	Res.	Res.	Res.	Res.	Res.	Res.	Res.	Res.	Res.	Res.	Res.	Res.	Res.	Res.	MEM2MEM	PL[1:0]		MSIZE[1:0]		PSIZE[1:0]		MINC	PINC	CIRC	DIR	TEIE	HTIE	TCIE	EN
	Reset value																		0	0	0	0	0	0	0	0	0	0	0	0	0	0	0

Table 48. DMA register map and reset values (continued)

Offset	Register name	31	30	29	28	27	26	25	24	23	22	21	20	19	18	17	16	15	14	13	12	11	10	9	8	7	6	5	4	3	2	1	0
0x070	DMA_CNDTR6	Res.	Res.	Res.	Res.	Res.	Res.	Res.	Res.	Res.	Res.	Res.	Res.	Res.	Res.	Res.	Res.	NDTR[15:0]															
	Reset value																	0	0	0	0	0	0	0	0	0	0	0	0	0	0	0	0
0x074	DMA_CPAR6	PA[31:0]																															
	Reset value	0	0	0	0	0	0	0	0	0	0	0	0	0	0	0	0	0	0	0	0	0	0	0	0	0	0	0	0	0	0	0	0
0x078	DMA_CMAR6	MA[31:0]																															
	Reset value	0	0	0	0	0	0	0	0	0	0	0	0	0	0	0	0	0	0	0	0	0	0	0	0	0	0	0	0	0	0	0	0
0x07C	Reserved	Reserved.																															
0x080	DMA_CCR7	Res.	Res.	Res.	Res.	Res.	Res.	Res.	Res.	Res.	Res.	Res.	Res.	Res.	Res.	Res.	Res.	Res.	MEM2MEM	PL[1:0]		MSIZE[1:0]		PSIZE[1:0]		MINC	PINC	CIRC	DIR	TEIE	HTIE	TCIE	EN
	Reset value																		0	0	0	0	0	0	0	0	0	0	0	0	0	0	0
0x084	DMA_CNDTR7	Res.	Res.	Res.	Res.	Res.	Res.	Res.	Res.	Res.	Res.	Res.	Res.	Res.	Res.	Res.	Res.	NDTR[15:0]															
	Reset value																	0	0	0	0	0	0	0	0	0	0	0	0	0	0	0	0
0x088	DMA_CPAR7	PA[31:0]																															
	Reset value	0	0	0	0	0	0	0	0	0	0	0	0	0	0	0	0	0	0	0	0	0	0	0	0	0	0	0	0	0	0	0	0
0x08C	DMA_CMAR7	MA[31:0]																															
	Reset value	0	0	0	0	0	0	0	0	0	0	0	0	0	0	0	0	0	0	0	0	0	0	0	0	0	0	0	0	0	0	0	0

Refer to *Section 2.2* for the register boundary addresses.

12 DMA request multiplexer (DMAMUX)

12.1 Introduction

A peripheral indicates a request for DMA transfer by setting its DMA request signal. The DMA request is pending until served by the DMA controller that generates a DMA acknowledge signal, and the corresponding DMA request signal is deasserted.

In this document, the set of control signals required for the DMA request/acknowledge protocol is not explicitly shown or described, and it is referred to as DMA request line.

The DMAMUX request multiplexer enables routing a DMA request line between the peripherals and the DMA controllers of the product. The routing function is ensured by a programmable multi-channel DMA request line multiplexer. Each channel selects a unique DMA request line, unconditionally or synchronously with events from its DMAMUX synchronization inputs. The DMAMUX may also be used as a DMA request generator from programmable events on its input trigger signals.

The number of DMAMUX instances and their main characteristics are specified in *Section 12.3.1*.

The assignment of DMAMUX request multiplexer inputs to the DMA request lines from peripherals and to the DMAMUX request generator outputs, the assignment of DMAMUX request multiplexer outputs to DMA controller channels, and the assignment of DMAMUX synchronizations and trigger inputs to internal and external signals depend upon product implementation. They are detailed in *Section 12.3.2*.

12.2 DMAMUX main features

- 7-channel programmable DMA request line multiplexer output
- 4-channel DMA request generator
- 20 trigger inputs to DMA request generator
- 20 synchronization inputs
- Per DMA request generator channel:
  - DMA request trigger input selector
  - DMA request counter
  - Event overrun flag for selected DMA request trigger input
- Per DMA request line multiplexer channel output:
  - 36 input DMA request lines from peripherals
  - One DMA request line output
  - Synchronization input selector
  - DMA request counter
  - Event overrun flag for selected synchronization input
  - One event output, for DMA request chaining

12.3 DMAMUX implementation

12.3.1 DMAMUX instantiation

DMAMUX is instantiated with the hardware configuration parameters listed in the following table.

Table 49. DMAMUX instantiation

Feature	DMAMUX
Number of DMAMUX output request channels	7
Number of DMAMUX request generator channels	4
Number of DMAMUX request trigger inputs	20
Number of DMAMUX synchronization inputs	20
Number of DMAMUX peripheral request inputs	36

12.3.2 DMAMUX mapping

The mapping of resources to DMAMUX is hardwired.

DMAMUX is used with DMA1

- DMAMUX channels 0 to 6 are connected to DMA1 channels 1 to 7

Table 50. DMAMUX: assignment of multiplexer inputs to resources

DMA request MUX input	Resource	DMA request MUX input	Resource	DMA request MUX input	Resource
1	dmamux_req_gen0	22	TIM1_CH2	43	Reserved
2	dmamux_req_gen1	23	TIM1_CH3	44	Reserved
3	dmamux_req_gen2	24	TIM1_CH4	45	Reserved
4	dmamux_req_gen3	25	TIM1_UP	46	Reserved
5	ADC1	26	TIM1_TRIG	47	Reserved
6	SPI1_RX	27	TIM1_COM	48	Reserved
7	SPI1_TX	28	TIM2_CH1	49	Reserved
8	Reserved	29	TIM2_CH2	50	Reserved
9	Reserved	30	TIM2_CH3	51	Reserved
10	I2C1_RX	31	TIM2_CH4	52	Reserved
11	I2C1_TX	32	TIM2_UP	53	Reserved
12	Reserved	33	Reserved	54	Reserved
13	Reserved	34	Reserved	55	Reserved
14	USART1_RX	35	Reserved	56	Reserved
15	USART1_TX	36	Reserved	57	Reserved
16	LPUART1_RX	37	Reserved	58	Reserved
17	LPUART1_TX	38	Reserved	59	Reserved
18	Reserved	39	AES2_IN	60	Reserved
19	Reserved	40	AES2_OUT	61	Reserved
20	Reserved	41	Reserved	62	Reserved
21	TIM1_CH1	42	Reserved	63	Reserved

Table 51. DMAMUX: assignment of trigger inputs to resources

Trigger input	Resource	Trigger input	Resource
0	EXTI LINE0	16	dmamux_evt0
1	EXTI LINE1	17	dmamux_evt1
2	EXTI LINE2	18	LPTIM1_OUT
3	EXTI LINE3	19	LPTIM2_OUT
4	EXTI LINE4	20	Reserved
5	EXTI LINE5	21	Reserved
6	EXTI LINE6	22	Reserved
7	EXTI LINE7	23	Reserved
8	EXTI LINE8	24	Reserved
9	EXTI LINE9	25	Reserved
10	EXTI LINE10	26	Reserved

Table 51. DMAMUX: assignment of trigger inputs to resources (continued)

Trigger input	Resource	Trigger input	Resource
11	EXTI LINE11	27	Reserved
12	EXTI LINE12	28	Reserved
13	EXTI LINE13	29	Reserved
14	EXTI LINE14	30	Reserved
15	EXTI LINE15	31	Reserved

Table 52. DMAMUX: assignment of synchronization inputs to resources

Sync. input	Resource	Sync. input	Resource
0	EXTI LINE0	16	dmamux_evt0
1	EXTI LINE1	17	dmamux_evt1
2	EXTI LINE2	18	LPTIM1_OUT
3	EXTI LINE3	19	LPTIM2_OUT
4	EXTI LINE4	20	Reserved
5	EXTI LINE5	21	Reserved
6	EXTI LINE6	22	Reserved
7	EXTI LINE7	23	Reserved
8	EXTI LINE8	24	Reserved
9	EXTI LINE9	25	Reserved
10	EXTI LINE10	26	Reserved
11	EXTI LINE11	27	Reserved
12	EXTI LINE12	28	Reserved
13	EXTI LINE13	29	Reserved
14	EXTI LINE14	30	Reserved
15	EXTI LINE15	31	Reserved

12.4 DMAMUX functional description

12.4.1 DMAMUX block diagram

Figure 24 shows the DMAMUX block diagram.

Figure 24. DMAMUX block diagram

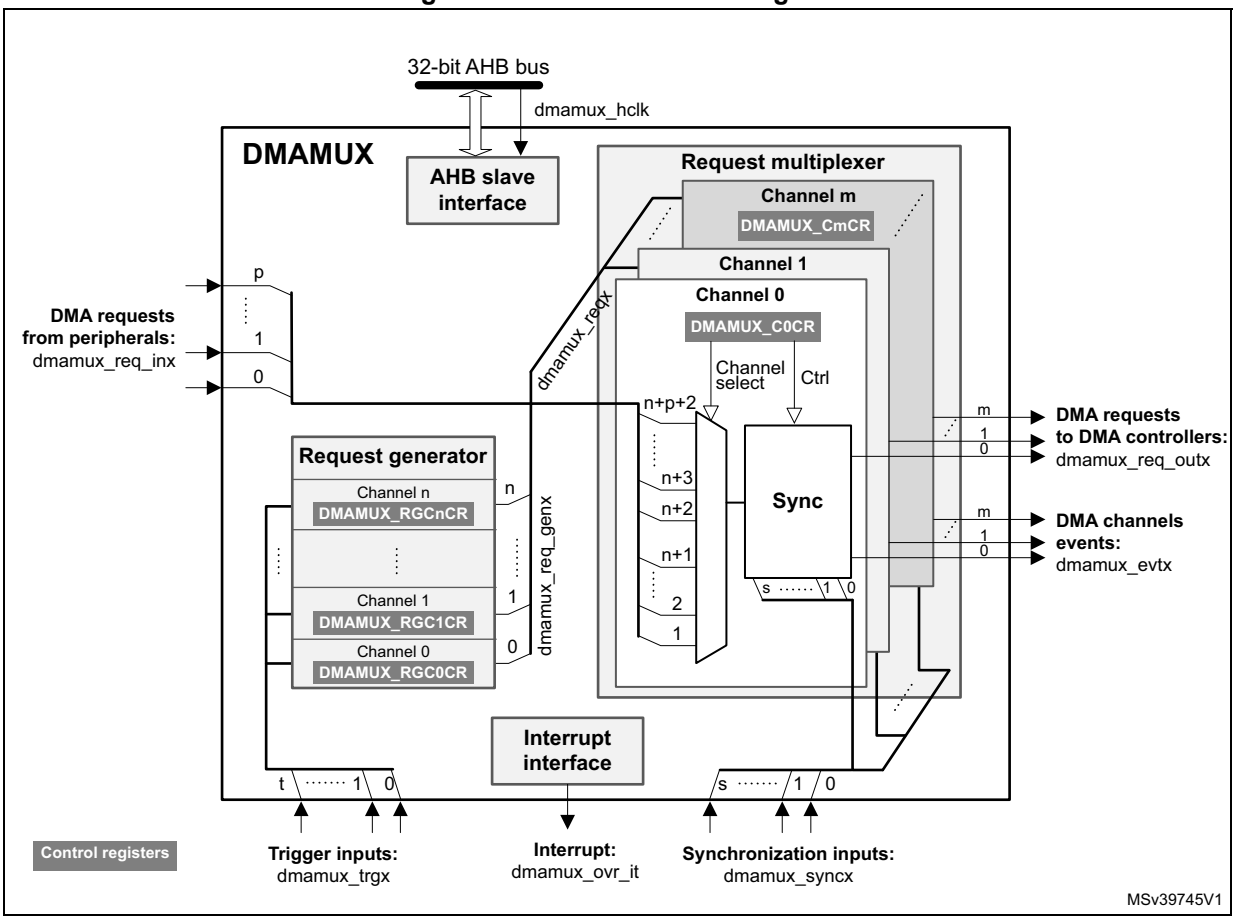

DMAMUX features two main sub-blocks: the request line multiplexer and the request line generator.

The implementation assigns:

- DMAMUX request multiplexer sub-block inputs (dmamux_reqx) from peripherals (dmamux_req_inx) and from channels of the DMAMUX request generator sub-block (dmamux_req_genx)
- DMAMUX request outputs to channels of DMA controllers (dmamux_req_outx)
- Internal or external signals to DMA request trigger inputs (dmamux_trgx)
- Internal or external signals to synchronization inputs (dmamux_syncx)

12.4.2 DMAMUX signals

Table 53 lists the DMAMUX signals.

Table 53. DMAMUX signals

Signal name	Description
dmamux_hclk	DMAMUX AHB clock
dmamux_req_inx	DMAMUX DMA request line inputs from peripherals
dmamux_trgx	DMAMUX DMA request triggers inputs (to request generator sub-block)
dmamux_req_genx	DMAMUX request generator sub-block channels outputs
dmamux_reqx	DMAMUX request multiplexer sub-block inputs (from peripheral requests and request generator channels)
dmamux_syncx	DMAMUX synchronization inputs (to request multiplexer sub-block)
dmamux_req_outx	DMAMUX requests outputs (to DMA controller)
dmamux_evtx	DMAMUX events outputs
dmamux_ovr_it	DMAMUX overrun interrupts

12.4.3 DMAMUX channels

A DMAMUX channel is a request multiplexer channel that can include, depending upon the selected input of the request multiplexer, an additional DMAMUX request generator channel.

A DMAMUX request multiplexer channel is connected and dedicated to a single channel of DMA controller.

Channel configuration procedure

Follow the sequence below to configure a DMAMUX x channel and the related DMA channel y:

1. Set and configure completely the DMA channel y, except enabling the channel y.
2. Set and configure completely the related DMAMUX y channel.
3. Last, activate the DMA channel y by setting the EN bit in the DMA y channel register.

12.4.4 DMAMUX request line multiplexer

The DMAMUX request multiplexer with its multiple channels ensures the actual routing of DMA request/acknowledge control signals, named DMA request lines.

Each DMA request line is connected in parallel to all the channels of the DMAMUX request line multiplexer.

A DMA request is sourced either from the peripherals, or from the DMAMUX request generator.

The DMAMUX request line multiplexer channel x selects the DMA request line number as configured by the DMAREQ_ID field in the DMAMUX_CxCR register.

Note: The null value in the field DMAREQ_ID corresponds to no DMA request line selected.

Caution: A same non-null DMAREQ_ID cannot be programmed to different x and y DMAMUX request multiplexer channels (via DMAMUX_CxCR and DMAMUX_CyCR), except when the application guarantees that the two connected DMA channels are not simultaneously active.

On top of the DMA request selection, the synchronization mode and/or the event generation may be configured and enabled, if required.

Synchronization mode and channel event generation

Each DMAMUX request line multiplexer channel x can be individually synchronized by setting the synchronization enable (SE) bit in the DMAMUX_CxCR register.

DMAMUX has multiple synchronization inputs. The synchronization inputs are connected in parallel to all the channels of the request multiplexer.

The synchronization input is selected via the SYNC_ID field in the DMAMUX_CxCR register of a given channel x.

When a channel is in this synchronization mode, the selected input DMA request line is propagated to the multiplexer channel output, once a programmable rising/falling edge is detected on the selected input synchronization signal, via the SPOL[1:0] field of the DMAMUX_CxCR register.

Additionally, internally to the DMAMUX request multiplexer, there is a programmable DMA request counter, which can be used for the channel request output generation, and for an event generation. An event generation on the channel x output is enabled through the EGE bit (event generation enable) of the DMAMUX_CxCR register.

As shown in *Figure 26*, upon the detected edge of the synchronization input, the pending selected input DMA request line is connected to the DMAMUX multiplexer channel x output.

Note: If a synchronization event occurs while there is no pending selected input DMA request line, it is discarded. The following asserted input request lines is not connected to the DMAMUX multiplexer channel output until a synchronization event occurs again.

From this point on, each time the connected DMAMUX request is served by the DMA controller (a served request is deasserted), the DMAMUX request counter is decremented. At its underrun, the DMA request counter is automatically loaded with the value in the NBREQ field of the DMAMUX_CxCR register and the input DMA request line is disconnected from the multiplexer channel x output.

Thus, the number of DMA requests transferred to the multiplexer channel x output following a detected synchronization event, is equal to the value in the NBREQ field, plus one.

Note: The NBREQ field value can be written by software only when both synchronization enable bit (SE) and event generation enable bit (EGE) of the corresponding multiplexer channel x are disabled.

Figure 25. Synchronization mode of the DMAMUX request line multiplexer channel

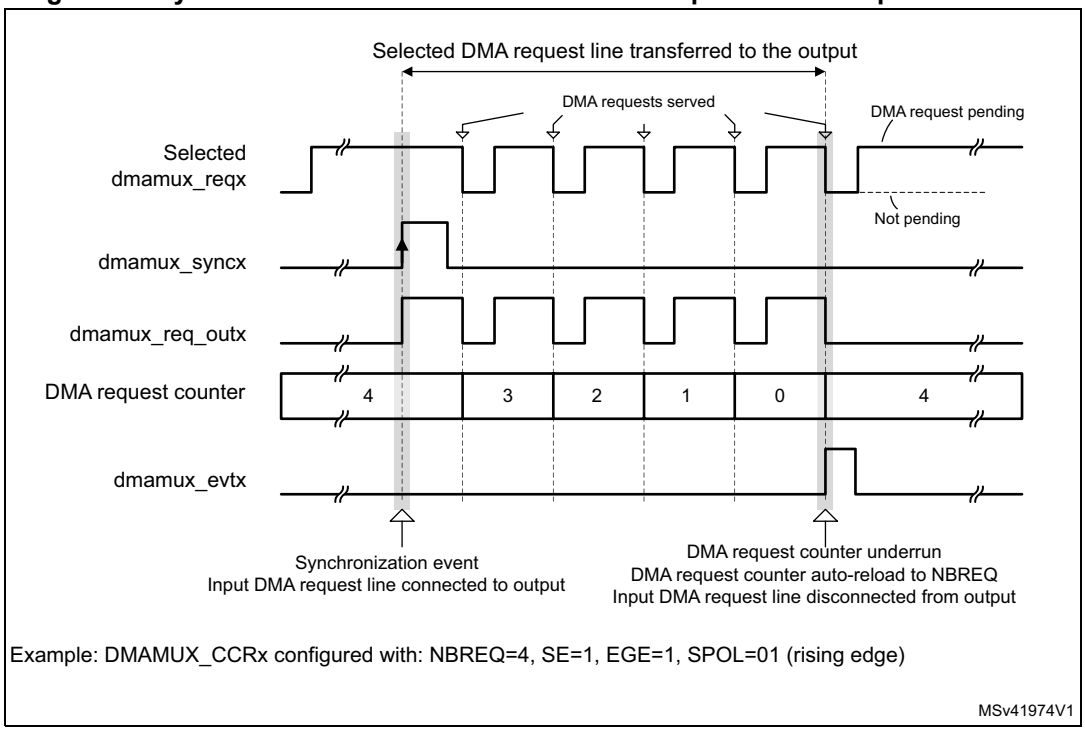

Figure 26. Event generation of the DMA request line multiplexer channel

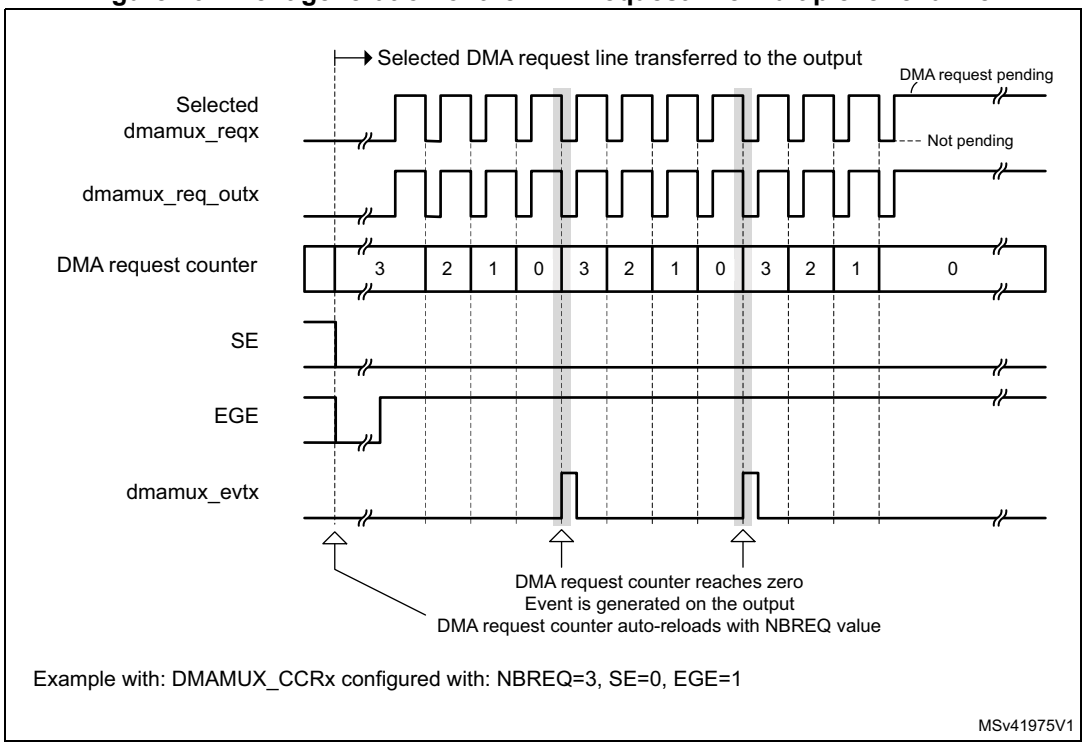

If EGE is enabled, the multiplexer channel generates a channel event, as a pulse of one AHB clock cycle, when its DMA request counter is automatically reloaded with the value of the programmed NBREQ field, as shown in *Figure 25* and *Figure 26*.

Note: If EGE is enabled and NBREQ = 0, an event is generated after each served DMA request.

Note: A synchronization event (edge) is detected if the state following the edge remains stable for more than two AHB clock cycles.

Upon writing into DMAMUX_CxCR register, the synchronization events are masked during three AHB clock cycles.

Synchronization overrun and interrupt

If a new synchronization event occurs before the request counter underrun (the internal request counter programmed via the NBREQ field of the DMAMUX_CxCR register), the synchronization overrun flag bit SOFx is set in the DMAMUX_CSR register.

Note: The request multiplexer channel x synchronization must be disabled (DMAMUX_CxCR.SE = 0) when the use of the related channel of the DMA controller is completed. Else, upon a new detected synchronization event, there is a synchronization overrun due to the absence of a DMA acknowledge (that is, no served request) received from the DMA controller.

The overrun flag SOFx is reset by setting the associated clear synchronization overrun flag bit CSOFx in the DMAMUX_CFR register.

Setting the synchronization overrun flag generates an interrupt if the synchronization overrun interrupt enable bit SOIE is set in the DMAMUX_CxCR register.

12.4.5 DMAMUX request generator

The DMAMUX request generator produces DMA requests following trigger events on its DMA request trigger inputs.

The DMAMUX request generator has multiple channels. DMA request trigger inputs are connected in parallel to all channels.

The outputs of DMAMUX request generator channels are inputs to the DMAMUX request line multiplexer.

Each DMAMUX request generator channel x has an enable bit GE (generator enable) in the corresponding DMAMUX_RGxCR register.

The DMA request trigger input for the DMAMUX request generator channel x is selected through the SIG_ID (trigger signal ID) field in the corresponding DMAMUX_RGxCR register.

Trigger events on a DMA request trigger input can be rising edge, falling edge or either edge. The active edge is selected through the GPOL (generator polarity) field in the corresponding DMAMUX_RGxCR register.

Upon the trigger event, the corresponding generator channel starts generating DMA requests on its output. Each time the DMAMUX generated request is served by the connected DMA controller (a served request is deasserted), a built-in (inside the DMAMUX request generator) DMA request counter is decremented. At its underrun, the request generator channel stops generating DMA requests and the DMA request counter is automatically reloaded to its programmed value upon the next trigger event.

Thus, the number of DMA requests generated after the trigger event is GNBREQ + 1.

Note: The GNBREQ field value can be written by software only when the enable GE bit of the corresponding generator channel x is disabled.

There is no hardware write protection.

A trigger event (edge) is detected if the state following the edge remains stable for more than two AHB clock cycles.

Upon writing into DMAMUX_RGxCR register, the trigger events are masked during three AHB clock cycles.

Trigger overrun and interrupt

If a new DMA request trigger event occurs before the DMAMUX request generator counter underrun (the internal counter programmed via the GNBREQ field of the DMAMUX_RGxCR register), and if the request generator channel x was enabled via GE, then the request trigger event overrun flag bit OFx is asserted by the hardware in the DMAMUX_RGSR register.

Note: The request generator channel x must be disabled (DMAMUX_RGxCR.GE = 0) when the usage of the related channel of the DMA controller is completed. Else, upon a new detected trigger event, there is a trigger overrun due to the absence of an acknowledge (that is, no served request) received from the DMA.

The overrun flag OFx is reset by setting the associated clear overrun flag bit COFx in the DMAMUX_RGCFR register.

Setting the DMAMUX request trigger overrun flag generates an interrupt if the DMA request trigger event overrun interrupt enable bit OIE is set in the DMAMUX_RGxCR register.

12.5 DMAMUX interrupts

An interrupt can be generated upon:

- a synchronization event overrun in each DMA request line multiplexer channel
- a trigger event overrun in each DMA request generator channel

For each case, per-channel in.dividual interrupt enable, status, and clear flag register bits are available.

Table 54. DMAMUX interrupts

Interrupt signal	Interrupt event	Event flag	Clear bit	Enable bit
dmamuxovr_it	Synchronization event overrun on channel x of the DMAMUX request line multiplexer	SOFx	CSOFx	SOIE
	Trigger event overrun on channel x of the DMAMUX request generator	OFx	COFx	OIE

12.6 DMAMUX registers

Refer to the table containing register boundary addresses for the DMAMUX base address.

DMAMUX registers may be accessed per byte (8-bit), half-word (16-bit), or word (32-bit). The address must be aligned with the data size.

12.6.1 DMAMUX request line multiplexer channel x configuration register (DMAMUX_CxCR)

Address offset: 0x000 + 0x04 * x (x = 0 to 6)

Reset value: 0x0000 0000

31	30	29	28	27	26	25	24	23	22	21	20	19	18	17	16
Res.	Res.	Res.	SYNC_ID[4:0]					NBREQ[4:0]					SPOL[1:0]		SE
			rw	rw	rw	rw	rw	rw	rw	rw	rw	rw	rw	rw	rw

15	14	13	12	11	10	9	8	7	6	5	4	3	2	1	0
Res.	Res.	Res.	Res.	Res.	Res.	EGE	SOIE	Res.	Res.	DMAREQ_ID[5:0]					
						rw	rw			rw	rw	rw	rw	rw	rw

Bits 31:29 Reserved, must be kept at reset value.

Bits 28:24 **SYNC_ID[4:0]**: Synchronization identification

Selects the synchronization input (see *Table 52: DMAMUX: assignment of synchronization inputs to resources*).

Bits 23:19 **NBREQ[4:0]**: Number of DMA requests minus 1 to forward

Defines the number of DMA requests to forward to the DMA controller after a synchronization event, and/or the number of DMA requests before an output event is generated.
This field must only be written when both SE and EGE bits are low.

Bits 18:17 **SPOL[1:0]**: Synchronization polarity

Defines the edge polarity of the selected synchronization input:
00: No event (no synchronization, no detection).
01: Rising edge
10: Falling edge
11: Rising and falling edges

Bit 16 **SE**: Synchronization enable

0: Synchronization disabled
1: Synchronization enabled

Bits 15:10 Reserved, must be kept at reset value.

Bit 9 **EGE**: Event generation enable

0: Event generation disabled
1: Event generation enabled

Bit 8 **SOIE**: Synchronization overrun interrupt enable

0: Interrupt disabled
1: Interrupt enabled

Bits 7:6 Reserved, must be kept at reset value.

Bits 5:0 **DMAREQ_ID[5:0]**: DMA request identification

Selects the input DMA request. See the DMAMUX table about assignments of multiplexer inputs to resources.

12.6.2 DMAMUX request line multiplexer interrupt channel status register (DMAMUX_CSR)

Address offset: 0x080

Reset value: 0x0000 0000

31	30	29	28	27	26	25	24	23	22	21	20	19	18	17	16
Res.	Res.	Res.	Res.	Res.	Res.	Res.	Res.	Res.	Res.	Res.	Res.	Res.	Res.	Res.	Res.

15	14	13	12	11	10	9	8	7	6	5	4	3	2	1	0
		Res.	Res.	Res.	Res.	Res.	Res.	Res.	SOF6	SOF5	SOF4	SOF3	SOF2	SOF1	SOF0
									r	r	r	r	r	r	r

Bits 31:7 Reserved, must be kept at reset value.

Bits 6:0 **SOF[6:0]**: Synchronization overrun event flag

The flag is set when a synchronization event occurs on a DMA request line multiplexer channel x, while the DMA request counter value is lower than NBREQ.

The flag is cleared by writing 1 to the corresponding CSOFx bit in DMAMUX_CFR register.

12.6.3 DMAMUX request line multiplexer interrupt clear flag register (DMAMUX_CFR)

Address offset: 0x084

Reset value: 0x0000 0000

31	30	29	28	27	26	25	24	23	22	21	20	19	18	17	16
Res.	Res.	Res.	Res.	Res.	Res.	Res.	Res.	Res.	Res.	Res.	Res.	Res.	Res.	Res.	Res.

15	14	13	12	11	10	9	8	7	6	5	4	3	2	1	0
		Res.	Res.	Res.	Res.	Res.	Res.	Res.	CSOF 6	CSOF 5	CSOF 4	CSOF 3	CSOF 2	CSOF 1	CSOF 0
									w	w	w	w	w	w	w

Bits 31:7 Reserved, must be kept at reset value.

Bits 6:0 **CSOF[6:0]**: Clear synchronization overrun event flag

Writing 1 in each bit clears the corresponding overrun flag SOFx in the DMAMUX_CSR register.

12.6.4 DMAMUX request generator channel x configuration register (DMAMUX_RGxCR)

Address offset: 0x100 + 0x04 * x (x = 0 to 3)

Reset value: 0x0000 0000

31	30	29	28	27	26	25	24	23	22	21	20	19	18	17	16
Res.	Res.	Res.	Res.	Res.	Res.	Res.	Res.	GNBREQ[4:0]					GPOL[1:0]		GE
								rw	rw	rw	rw	rw	rw	rw	rw
15	14	13	12	11	10	9	8	7	6	5	4	3	2	1	0
Res.	Res.	Res.	Res.	Res.	Res.	Res.	OIE	Res.	Res.	Res.	SIG_ID[4:0]				
							rw				rw	rw	rw	rw	rw

Bits 31:24 Reserved, must be kept at reset value.

Bits 23:19 **GNBREQ[4:0]**: Number of DMA requests to be generated (minus 1)

Defines the number of DMA requests to be generated after a trigger event. The actual number of generated DMA requests is GNBREQ +1.

Note: This field must be written only when GE bit is disabled.

Bits 18:17 **GPOL[1:0]**: DMA request generator trigger polarity

Defines the edge polarity of the selected trigger input
00: No event, i.e. no trigger detection nor generation.
01: Rising edge
10: Falling edge
11: Rising and falling edges

Bit 16 **GE**: DMA request generator channel x enable

0: DMA request generator channel x disabled
1: DMA request generator channel x enabled

Bits 15:9 Reserved, must be kept at reset value.

Bit 8 **OIE**: Trigger overrun interrupt enable

0: Interrupt on a trigger overrun event occurrence is disabled
1: Interrupt on a trigger overrun event occurrence is enabled

Bits 7:5 Reserved, must be kept at reset value.

Bits 4:0 **SIG_ID[4:0]**: Signal identification

Selects the DMA request trigger input used for the channel x of the DMA request generator

12.6.5 DMAMUX request generator interrupt status register (DMAMUX_RGSR)

Address offset: 0x140

Reset value: 0x0000 0000

31	30	29	28	27	26	25	24	23	22	21	20	19	18	17	16
Res.	Res.	Res.	Res.	Res.	Res.	Res.	Res.	Res.	Res.	Res.	Res.	Res.	Res.	Res.	Res.
15	14	13	12	11	10	9	8	7	6	5	4	3	2	1	0
Res.	Res.	Res.	Res.	Res.	Res.	Res.	Res.	Res.	Res.	Res.	Res.	OF3	OF2	OF1	OF0
												r	r	r	r

Bits 31:4 Reserved, must be kept at reset value.

Bits 3:0 **OF[3:0]**: Trigger overrun event flag

The flag is set when a new trigger event occurs on DMA request generator channel x, before the request counter underrun (the internal request counter programmed via the GNBREQ field of the DMAMUX_RGxCR register).

The flag is cleared by writing 1 to the corresponding COFx bit in the DMAMUX_RGCFR register.

12.6.6 DMAMUX request generator interrupt clear flag register (DMAMUX_RGCFR)

Address offset: 0x144

Reset value: 0x0000 0000

31	30	29	28	27	26	25	24	23	22	21	20	19	18	17	16
Res.	Res.	Res.	Res.	Res.	Res.	Res.	Res.	Res.	Res.	Res.	Res.	Res.	Res.	Res.	Res.
15	14	13	12	11	10	9	8	7	6	5	4	3	2	1	0
Res.	Res.	Res.	Res.	Res.	Res.	Res.	Res.	Res.	Res.	Res.	Res.	COF3	COF2	COF1	COF0
												w	w	w	w

Bits 31:4 Reserved, must be kept at reset value.

Bits 3:0 **COF[3:0]**: Clear trigger overrun event flag

Writing 1 in each bit clears the corresponding overrun flag OFx in the DMAMUX_RGSR register.

12.6.7 DMAMUX register map

The following table summarizes the DMAMUX registers and reset values. Refer to the register boundary address table for the DMAMUX register base address.

Table 55. DMAMUX register map and reset values

Offset	Register	31	30	29	28	27	26	25	24	23	22	21	20	19	18	17	16	15	14	13	12	11	10	9	8	7	6	5	4	3	2	1	0
0x000	DMAMUX_C0CR	Res.	Res.	Res.	SYNC_ID[4:0]					NBREQ[4:0]					SPOL		SE	Res.	Res.	Res.	Res.	Res.	Res.	EGE	SOIE	Res.	Res.	DMAREQ_ID[5:0]					
	Reset value				0	0	0	0	0	0	0	0	0	0	0	0	0							0	0			0	0	0	0	0	0
0x004	DMAMUX_C1CR	Res.	Res.	Res.	SYNC_ID[4:0]					NBREQ[4:0]					SPOL		SE	Res.	Res.	Res.	Res.	Res.	Res.	EGE	SOIE	Res.	Res.	DMAREQ_ID[5:0]					
	Reset value				0	0	0	0	0	0	0	0	0	0	0	0	0							0	0			0	0	0	0	0	0
0x008	DMAMUX_C2CR	Res.	Res.	Res.	SYNC_ID[4:0]					NBREQ[4:0]					SPOL		SE	Res.	Res.	Res.	Res.	Res.	Res.	EGE	SOIE	Res.	Res.	DMAREQ_ID[5:0]					
	Reset value				0	0	0	0	0	0	0	0	0	0	0	0	0							0	0			0	0	0	0	0	0
0x00C	DMAMUX_C3CR	Res.	Res.	Res.	SYNC_ID[4:0]					NBREQ[4:0]					SPOL		SE	Res.	Res.	Res.	Res.	Res.	Res.	EGE	SOIE	Res.	Res.	DMAREQ_ID[5:0]					
	Reset value				0	0	0	0	0	0	0	0	0	0	0	0	0							0	0			0	0	0	0	0	0
0x010	DMAMUX_C4CR	Res.	Res.	Res.	SYNC_ID[4:0]					NBREQ[4:0]					SPOL		SE	Res.	Res.	Res.	Res.	Res.	Res.	EGE	SOIE	Res.	Res.	DMAREQ_ID[5:0]					
	Reset value				0	0	0	0	0	0	0	0	0	0	0	0	0							0	0			0	0	0	0	0	0
0x014	DMAMUX_C5CR	Res.	Res.	Res.	SYNC_ID[4:0]					NBREQ[4:0]					SPOL		SE	Res.	Res.	Res.	Res.	Res.	Res.	EGE	SOIE	Res.	Res.	DMAREQ_ID[5:0]					
	Reset value				0	0	0	0	0	0	0	0	0	0	0	0	0							0	0			0	0	0	0	0	0
0x018	DMAMUX_C6CR	Res.	Res.	Res.	SYNC_ID[4:0]					NBREQ[4:0]					SPOL		SE	Res.	Res.	Res.	Res.	Res.	Res.	EGE	SOIE	Res.	Res.	DMAREQ_ID[5:0]					
	Reset value				0	0	0	0	0	0	0	0	0	0	0	0	0							0	0			0	0	0	0	0	0
0x018 - 0x07C	Reserved	Res.	Res.	Res.	Res.	Res.	Res.	Res.	Res.	Res.	Res.	Res.	Res.	Res.	Res.	Res.	Res.	Res.	Res.	Res.	Res.	Res.	Res.	Res.	Res.	Res.	Res.	Res.	Res.	Res.	Res.	Res.	Res.
0x080	DMAMUX_CSR	Res.	Res.	Res.	Res.	Res.	Res.	Res.	Res.	Res.	Res.	Res.	Res.	Res.	Res.	Res.	Res.	Res.	Res.	Res.	Res.	Res.	Res.	Res.	Res.	Res.	SOF6	SOF5	SOF4	SOF3	SOF2	SOF1	SOF0
	Reset value																										0	0	0	0	0	0	0
0x084	DMAMUX_CFR	Res.	Res.	Res.	Res.	Res.	Res.	Res.	Res.	Res.	Res.	Res.	Res.	Res.	Res.	Res.	Res.	Res.	Res.	Res.	Res.	Res.	Res.	Res.	Res.	Res.	CSOF6	CSOF5	CSOF4	CSOF3	CSOF2	CSOF1	CSOF0
	Reset value																										0	0	0	0	0	0	0
0x088 - 0x0FC	Reserved	Res.	Res.	Res.	Res.	Res.	Res.	Res.	Res.	Res.	Res.	Res.	Res.	Res.	Res.	Res.	Res.	Res.	Res.	Res.	Res.	Res.	Res.	Res.	Res.	Res.	Res.	Res.	Res.	Res.	Res.	Res.	Res.
0x100	DMAMUX_RG0CR	Res.	Res.	Res.	Res.	Res.	Res.	Res.	Res.	GNBREQ[4:0]					GPOL		GE	Res.	Res.	Res.	Res.	Res.	Res.	Res.	OIE	Res.	Res.	Res.	SIG_ID[4:0]				
	Reset value									0	0	0	0	0	0	0	0								0				0	0	0	0	0
0x104	DMAMUX_RG1CR	Res.	Res.	Res.	Res.	Res.	Res.	Res.	Res.	GNBREQ[4:0]					GPOL		GE	Res.	Res.	Res.	Res.	Res.	Res.	Res.	OIE	Res.	Res.	Res.	SIG_ID[4:0]				
	Reset value									0	0	0	0	0	0	0	0								0				0	0	0	0	0
0x108	DMAMUX_RG2CR	Res.	Res.	Res.	Res.	Res.	Res.	Res.	Res.	GNBREQ[4:0]					GPOL		GE	Res.	Res.	Res.	Res.	Res.	Res.	Res.	OIE	Res.	Res.	Res.	SIG_ID[4:0]				
	Reset value									0	0	0	0	0	0	0	0								0				0	0	0	0	0
0x10C	DMAMUX_RG3CR	Res.	Res.	Res.	Res.	Res.	Res.	Res.	Res.	GNBREQ[4:0]					GPOL		GE	Res.	Res.	Res.	Res.	Res.	Res.	Res.	OIE	Res.	Res.	Res.	SIG_ID[4:0]				
	Reset value									0	0	0	0	0	0	0	0								0				0	0	0	0	0
0x110 - 0x13C	Reserved	Res.	Res.	Res.	Res.	Res.	Res.	Res.	Res.	Res.	Res.	Res.	Res.	Res.	Res.	Res.	Res.	Res.	Res.	Res.	Res.	Res.	Res.	Res.	Res.	Res.	Res.	Res.	Res.	Res.	Res.	Res.	Res.
0x140	DMAMUX_RGSR	Res.	Res.	Res.	Res.	Res.	Res.	Res.	Res.	Res.	Res.	Res.	Res.	Res.	Res.	Res.	Res.	Res.	Res.	Res.	Res.	Res.	Res.	Res.	Res.	Res.	Res.	Res.	Res.	OF3	OF2	OF1	OF0
	Reset value																													0	0	0	0

Table 55. DMAMUX register map and reset values (continued)

Offset	Register	31	30	29	28	27	26	25	24	23	22	21	20	19	18	17	16	15	14	13	12	11	10	9	8	7	6	5	4	3	2	1	0
0x144	DMAMUX_RGCFR	Res	Res	Res	Res	Res	Res	Res	Res	Res	Res	Res	Res	Res	Res	Res	Res	Res	Res	Res	Res	Res	Res	Res	Res	Res	Res	Res	Res	COF3	COF2	COF1	COF0
	Reset value																													0	0	0	0
0x148 - 0x3FC	Reserved	Res	Res	Res	Res	Res	Res	Res	Res	Res	Res	Res	Res	Res	Res	Res	Res	Res	Res	Res	Res	Res	Res	Res	Res	Res	Res	Res	Res	Res	Res	Res	Res

Refer to *Section 2.2 on page 55* for the register boundary addresses.

13 Nested vectored interrupt controller (NVIC)

13.1 NVIC main features

The CPU1 NVIC features:

- 63 maskable interrupt channels (not including the sixteen Cortex®-M4 with FPU interrupt lines)
- 16 programmable priority levels (four bits of interrupt priority are used)
- Low-latency exception interrupt handling
- Power management control
- Implementation of System control registers

The CPU2 NVIC features:

- 32 maskable interrupt channels (not including the sixteen Cortex®-M0+ interrupt lines)
- Four programmable priority levels (two bits of interrupt priority are used)
- Low-latency exception interrupt handling
- Power management control

The NVICs and the processor cores interfaces are closely coupled, resulting in low latency interrupt processing and efficient processing of late arriving interrupts.

All interrupts including the core exceptions are managed by the NVIC. For more information on exceptions and NVIC programming refer to *STM32 Cortex®-M4 MCUs and MPUs programming manual* (PM0214) for Cortex®-M4, and *Cortex®-M0+ programming manual for STM32L0, STM32G0, STM32WL and STM32WB Series* (PM0223) for Cortex®-M0+.

13.2 Interrupt block diagram

The different peripheral interrupts are connected in different ways, depending on the sharing between the two CPUs. To prevent a peripheral or EXTI interrupt to trigger both CPUs, they can be masked either in the NVIC, or, for the NVIC vector sharing multiple peripheral interrupts, by a pre-mask in the SYSCFG registers, see *Section 10: System configuration controller (SYSCFG)*.

The interrupt block diagram is shown in *Figure 27*.

Figure 27. Interrupt block diagram

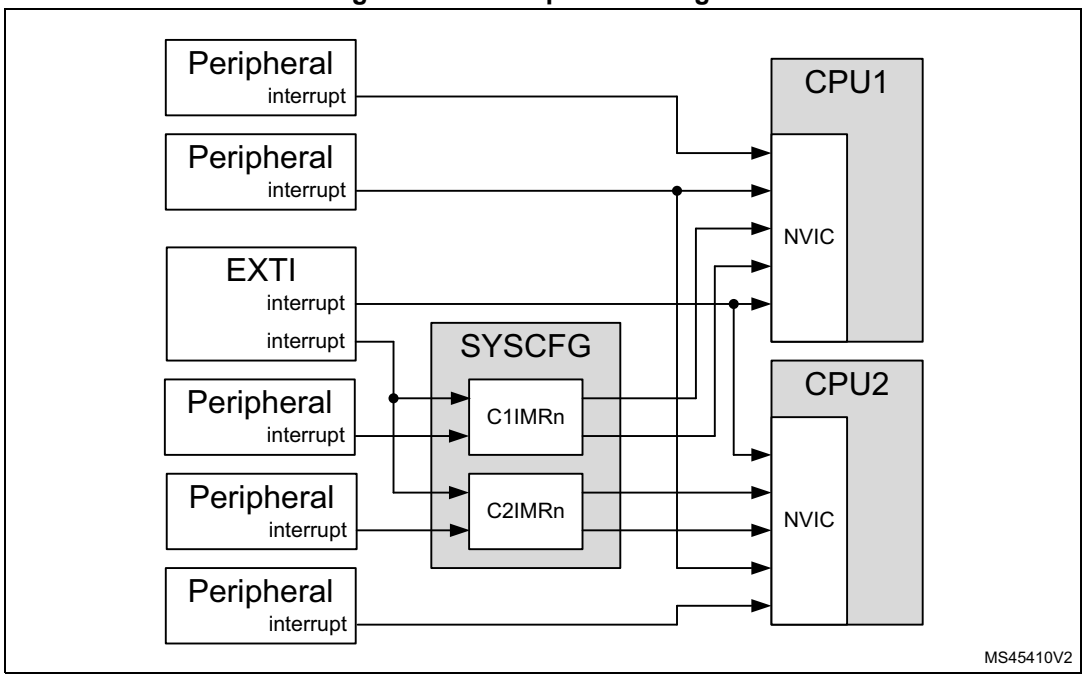

13.3 Interrupt and exception vectors

Each of the CPU1 and CPU2 has its own vector table, see, respectively, *Table 56* and *Table 57*, where shaded cells indicate the processor exceptions.

Table 56. CPU1 vector table

Position	Priority	Type of priority	Acronym	Description	Address
-	-	-	-	Reserved	0x0000 0000
-	-3	Fixed	Reset	Reset	0x0000 0004
-	-2	Fixed	NMI	Non maskable interrupt HSE CSS, Flash ECC, and SRAM2 parity	0x0000 0008
-	-1	Fixed	HardFault	All classes of fault	0x0000 000C
-	0	Settable	MemManager	Memory manager	0x0000 0010
-	1	Settable	BusFault	Pre-fetch fault, memory access fault	0x0000 0014
-	2	Settable	UsageFault	Undefined instruction or illegal state	0x0000 0018
-	-	-	-	Reserved	0x0000 001C 0x0000 0028
-	3	Settable	SVCall	System service call via SWI instruction	0x0000 002C
-	4	Settable	Debug	Debug monitor	0x0000 0030
-	-	-	-	Reserved	0x0000 0034
-	5	Settable	PendSV	Pendable request for system service	0x0000 0038
-	6	Settable	Systick	System tick timer	0x0000 003C
0	7	Settable	WWDG	Window watchdog early wakeup	0x0000 0040
1	8	Settable	PVD, PVM3	PVD through EXTI[16] (C1IMR2[20]) PVM3 through EXTI[33] (C1IMR2[18])	0x0000 0044
2	9	Settable	TAMP, RTC_STAMP, LSE_CSS	Tamper, TimeStamp, LSECSS interrupt through EXTI[18]	0x0000 0048
3	10	Settable	RTC_WKUP	RTC wakeup interrupt through EXTI[19]	0x0000 004C
4	11	Settable	Flash	Flash memory global interrupt and Flash memory ECC single error interrupt	0x0000 0050
5	12	Settable	RCC	RCC global interrupt	0x0000 0054
6	13	Settable	EXTI0	EXTI line 0 interrupt through EXTI[0]	0x0000 0058
7	14	Settable	EXTI1	EXTI line 1 interrupt through EXTI[1]	0x0000 005C
8	15	Settable	EXTI2	EXTI line 2 interrupt through EXTI[2]	0x0000 0060
9	16	Settable	EXTI3	EXTI line 3 interrupt through EXTI[3]	0x0000 0064
10	17	Settable	EXTI4	EXTI line 4 interrupt through EXTI[4]	0x0000 0068
11	18	Settable	DMA1_CH1	DMA1 channel 1 interrupt	0x0000 006C
12	19	Settable	DMA1_CH2	DMA1 channel 2 interrupt	0x0000 0070
13	20	Settable	DMA1_CH3	DMA1 channel 3 interrupt	0x0000 0074
14	21	Settable	DMA1_CH4	DMA1 channel 4 interrupt	0x0000 0078
15	22	Settable	DMA1_CH5	DMA1 channel 5 interrupt	0x0000 007C
16	23	Settable	DMA1_CH6	DMA1 channel 6 interrupt	0x0000 0080

Table 56. CPU1 vector table (continued)

Position	Priority	Type of priority	Acronym	Description	Address
17	24	Settable	DMA1_CH7	DMA1 channel 7 interrupt	0x0000 0084
18	25	Settable	ADC1	ADC1 global interrupt	0x0000 0088
19	26	-	-	Reserved	0x0000 008C
20	27	-	-	Reserved	0x0000 0090
21	28	Settable	C2SEV PWR_C2H	CPU2 SEV through EXTI[40] PWR CPU2 HOLD wakeup interrupt	0x0000 0094
22	29	Settable	COMP	COMP1 interrupt through EXTI[21:20]	0x0000 0098
23	30	Settable	EXTI[9:5]	EXTI line [9:5] interrupt through EXTI[9:5] (C1IMR1[25:21])	0x0000 009C
24	31	Settable	TIM1_BRK	Timer 1 break interrupt	0x0000 00A0
25	32	Settable	TIM1_UP	Timer 1 update (C1IMR1[13])	0x0000 00A4
26	33	Settable	TIM1_TRG_COM	Timer 1 trigger and communication (C1IMR1[13])	0x0000 00A8
27	34	Settable	TIM1_CC	Timer 1 capture compare interrupt	0x0000 00AC
28	35	Settable	TIM2	Timer 2 global interrupt	0x0000 00B0
29	36	Settable	PKA	Private key accelerator interrupt	0x0000 00B4
30	37	Settable	I2C1_EV	I2C1 event interrupt	0x0000 00B8
31	38	Settable	I2C1_ER	I2C1 error interrupt	0x0000 00BC
32	39	-	-	Reserved	0x0000 00C0
33	40	-	-	Reserved	0x0000 00C4
34	41	Settable	SPI1	SPI 1 global interrupt	0x0000 00C8
35	42	-	-	Reserved	0x0000 00CC
36	43	Settable	USART1	USART1 global interrupt	0x0000 00D0
37	44	Settable	LPUART1	LPUART1 global interrupt	0x0000 00D4
38	45	-	-	Reserved	0x0000 00D8
39	46	Settable	TSC	TSC global interrupt	0x0000 00DC
40	47	Settable	EXTI[15:10]	EXTI line [15:10] interrupt through EXTI[15:10] (C1IMR1[31:26])	0x0000 00E0
41	48	Settable	RTC_ALARM	RTC alarms (A and B) interrupt through EXTI[17]	0x0000 00E4
42	49	-	-	Reserved	0x0000 00E8
43	50	Settable	PWR_SOTF PWR_BLEACT PWR_RFPHASE	PWR switching on the fly interrupt PWR end of BLE activity interrupt PWR end of critical radio phase interrupt	0x0000 00EC
44	51	Settable	IPCC_C1_RX_IT	IPCC CPU1 RX occupied interrupt	0x0000 00F0
45	52	Settable	IPCC_C1_TX_IT	IPCC CPU1 TX free interrupt	0x0000 00F4
46	53	Settable	HSEM	Semaphore interrupt 0 to CPU1	0x0000 00F8

Table 56. CPU1 vector table (continued)

Position	Priority	Type of priority	Acronym	Description	Address
47	54	Settable	LPTIM1	LPtimer 1 global interrupt	0x0000 00FC
48	55	Settable	LPTIM2	LPtimer 2 global interrupt	0x0000 0100
49	56	-	-	Reserved	0x0000 0104
50	57	-	-	Reserved	0x0000 0108
51	58	-	-	Reserved	0x0000 010C
52	59	Settable	AES2	AES2 global interrupt	0x0000 0110
53	60	Settable	True RNG	True random number generator interrupt	0x0000 0114
54	61	Settable	FPU	Floating point unit interrupt	0x0000 0118
55	62	-	-	Reserved	0x0000 011C
56	63	-	-	Reserved	0x0000 0120
57	64	-	-	Reserved	0x0000 0124
58	65	-	-	Reserved	0x0000 0128
59	66	-	-	Reserved	0x0000 012C
60	67	-	-	Reserved	0x0000 0130
61	68	-	-	Reserved	0x0000 0134
62	69	Settable	DMAMUX1_OVR	DMAMUX1 overrun interrupt	0x0000 0138

Table 57. CPU2 vector table

Position	Priority	Type of priority	Acronym	Description	Address
-	-	-	-	Reserved	0x0000 0000
-	-3	Fixed	Reset	Reset	0x0000 0004
-14	-2	Fixed	NMI	Non maskable interrupt HSE CSS, Flash ECC, and SRAM2 parity	0x0000 0008
-13	-1	Fixed	HardFault	All classes of fault	0x0000 000C
-	-	-	-	Reserved	0x0000 0010 0x0000 0028
-5	0	Settable	SVCall	System service call via SWI instruction	0x0000 002C
-	-	-	-	Reserved	0x0000 0030 0x0000 0034
-2	1	Settable	PendSV	Pendable request for system service	0x0000 0038
-1	2	Settable	Systick	System tick timer	0x0000 003C
0	3	Settable	-	Reserved	0x0000 0040
1	4	Settable	PVD, PVM3	PVD through EXTI[16] (C2IMR2[20]) PVM3 through EXTI[33] (C2IMR2[18])	0x0000 0044
2	5	Settable	RTC_WKUP, TAMP, RTC_STAMP LSE_CSS, RTC_ALARM	RTC wakeup interrupt through EXTI[19] (C2IMR1[3]) Tamper, TimeStamp LSECSS interrupt through EXTI[18] (C2IMR1[0]) RTC alarms (A and B) interrupt through EXTI[17] (C2IMR1[4])	0x0000 0048
3	6	-	-	Reserved	0x0000 004C
4	7	Settable	RCC FLASH C1SEV	RCC global interrupt (C2IMR1[5]) Flash memory global interrupt and Flash memory ECC single error interrupt (C2IMR1[6]) CPU1 SEV through EXTI[41]	0x0000 0050
5	8	Settable	EXTI[1:0]	EXTI line 1:0 interrupt through EXTI[1:0] (C2IMR1[17:16])	0x0000 0054
6	9	Settable	EXTI[3:2]	EXTI line 3:2 interrupt through EXTI[3:2] (C2IMR1[19:18])	0x0000 0058
7	10	Settable	EXTI[15:4]	EXTI line 15:4 interrupt through EXTI[15:4] (C2IMR1[31:20])	0x0000 005C
8	11	Settable	TSC	TSC global interrupt (C2IMR2[21])	0x0000 0060
9	12	Settable	DMA1_CH[3:1]	DMA1 channel 3:1 interrupt (C2IMR2[2:0])	0x0000 0064
10	13	Settable	DMA1_CH[7:4]	DMA1 channel 7:4 interrupt (C2IMR2[6:3])	0x0000 0068
11	14	Settable	DMAMUX1_OVR	DMAMUX1 overrun interrupt (C2IMR2[15])	0x0000 006C
12	15	Settable	ADC1 COMP	ADC1 global interrupt (C2IMR1[12]) COMP1 interrupt through EXTI[21:20] (C2IMR1[11])	0x0000 0070
13	16	Settable	LPTIM1	LP timer 1 global interrupt	0x0000 0074

Table 57. CPU2 vector table (continued)

Position	Priority	Type of priority	Acronym	Description	Address
14	17	Settable	LPTIM2	LP timer 2 global interrupt	0x0000 0078
15	18	Settable	TIM1_BRK, TIM1_UP, TIM1_TRG_COM, TIM1_CC	Timer 1 break, update, trigger and communication, capture compare interrupt	0x0000 007C
16	19	Settable	TIM2	Timer 2 global interrupt	0x0000 0080
17	20	-	-	Reserved	0x0000 0084
18	21	-	-	Reserved	0x0000 0088
19	22	Settable	IPCC_C2_RX_IT IPCC_C2_TX_IT HSEM	IPCC CPU2 RX occupied interrupt IPCC CPU2 TX free interrupt Semaphore interrupt 1 o CPU2	0x0000 008C
20	23	Settable	PKA True RNG	Private key accelerator interrupt (C2IMR1[8]) True random number generator interrupt (C2IMR1[9])	0x0000 0090
21	24	Settable	AES2	AES2 global interrupt	0x0000 0094
22	25	-	-	Reserved	0x0000 0098
23	26	Settable	I2C1_EV I2C1_ER	I2C1 event interrupt I2C1 error interrupt	0x0000 009C
24	27	-	-	Reserved	0x0000 00A0
25	28	Settable	SPI1	SPI1 global interrupt	0x0000 00A4
26	29	-	-	Reserved	0x0000 00A8
27	30	Settable	USART1	USART1 global interrupt	0x0000 00AC
28	31	Settable	LPUART1	LPUART global interrupt	0x0000 00B0
29	32	-	-	Reserved	0x0000 00B4
30	33	Settable	BLE_BLUE_IT BLE_RFC_IT BLE_RFFMS_IT BLE_HOST_WKUP	BLE blue controller interrupt BLE radio control interrupt BLE radio states interrupt BLE host wakeup interrupt	0x0000 00B8
31	34	-	-	Reserved	0x0000 00BC

13.4 Interrupt list

The device wakeup sources are listed in *Table 58*. Depending on its origin, the wakeup is handled according to different types, see *Section 14.4: EXTI functional behavior* for more information.

Some wakeup sources are able to generate an event to the CPUs. see *Event* column.

The wakeup source capability to wakeup CPU1 and or CPU2 is listed in *Wakeup* column.

For CPUs interrupt handling see *Section 13: Nested vectored interrupt controller (NVIC)*.

For Wakeup handling see *Section 14: Extended interrupt and event controller (EXTI)*.

Table 58. Wakeup interrupt table

EXTI no.	Acronym	Description	EXTI type	Event	Wakeup
0	EXTI[0]	EXTI line 0 from SYSCFG	Configurable A	Yes	CPU1 and CPU2
1	EXTI[1]	EXTI line 1 from SYSCFG	Configurable A	Yes	CPU1 and CPU2
2	EXTI[2]	EXTI line 2 from SYSCFG	Configurable A	Yes	CPU1 and CPU2
3	EXTI[3]	EXTI line 3 from SYSCFG	Configurable A	Yes	CPU1 and CPU2
4	EXTI[4]	EXTI line 4 from SYSCFG	Configurable A	Yes	CPU1 and CPU2
5	EXTI[5]	EXTI line 5 from SYSCFG	Configurable A	Yes	CPU1 and CPU2
6	EXTI[6]	EXTI line 6 from SYSCFG	Configurable A	Yes	CPU1 and CPU2
7	EXTI[7]	EXTI line 7 from SYSCFG	Configurable A	Yes	CPU1 and CPU2
8	EXTI[8]	EXTI line 8 from SYSCFG	Configurable A	Yes	CPU1 and CPU2
9	EXTI[8]	EXTI line 9 from SYSCFG	Configurable A	Yes	CPU1 and CPU2
10	EXTI[10]	EXTI line 10 from SYSCFG	Configurable A	Yes	CPU1 and CPU2
11	EXTI[11]	EXTI line 11 from SYSCFG	Configurable A	Yes	CPU1 and CPU2
12	EXTI[12]	EXTI line 12 from SYSCFG	Configurable A	Yes	CPU1 and CPU2
13	EXTI[13]	EXTI line 13 from SYSCFG	Configurable A	Yes	CPU1 and CPU2
14	EXTI[14]	EXTI line 14 from SYSCFG	Configurable A	Yes	CPU1 and CPU2
15	EXTI[15]	EXTI line 15 from SYSCFG	Configurable A	Yes	CPU1 and CPU2
16	PVD	PVD line	Configurable A	No	CPU1 and CPU2
17	RTC_ALARM	RTC Alarms (A and B) interrupt	Configurable A	Yes	CPU1 and CPU2
18	TAMP, RTC_STAMP, LSE_CSS	RTC Tamper interrupt RTC TimeStamp interrupt RCC LSECSS interrupt	Configurable A	Yes	CPU1 and CPU2
19	RTC_WKUP	RTC wakeup interrupt	Configurable A	Yes	CPU1 and CPU2
20	COMP1	COMP1 line	Configurable A	Yes	CPU1 and CPU2
21	Reserved	-	-	-	-
22	I2C1 wakeup	I2C1 wakeup	Direct B	No	CPU1 and CPU2
23	Reserved	-	-	-	-
24	USART1	USART1 wakeup	Direct B	No	CPU1 and CPU2
25	LPUART1	LPUART1 wakeup	Direct B	No	CPU1 and CPU2
26	Reserved	-	-	-	-
27	Reserved	-	-	-	-
28	Reserved	-	-	-	-
29	LPTIM1 wakeup	LP timer 1 wakeup	Direct B	No	CPU1 and CPU2
30	LPTIM2 wakeup	LP timer 2 wakeup	Direct B	No	CPU1 and CPU2

Table 58. Wakeup interrupt table (continued)

EXTI no.	Acronym	Description	EXTI type	Event	Wakeup
31	PVM1	PVM1 line	Configurable A	No	CPU1 and CPU2
32	Reserved	-	-	-	-
33	PVM3	PVM3 line	Configurable A	No	CPU1 and CPU2
34	Reserved	-	-	-	-
35	Reserved	-	-	-	-
36	IPCC CPU1 interrupts	IPCC CPU1 RX occupied and TX free interrupts	Direct C	No	CPU1(1)
37	IPCC CPU2 interrupts	IPCC CPU2 RX occupied and TX free interrupts	Direct C	No	CPU2(2)
38	HSEM interrupt 0	Semaphore interrupt 0 for CPU1	Direct C	No	CPU1(1)
39	HSEM interrupt 1	Semaphore interrupt 1 for CPU2	Direct C	No	CPU2(2)
40	C2SEV	CPU2 SEV line	Configurable A	Yes	CPU1(3)
41	C1SEV	CPU1 SEV line	Configurable A	Yes	CPU2(4)
42	Flash interrupt	Flash ECC and global interrupts	Direct C	No	CPU1 and CPU2
43	Reserved	-	-	-	-
44	HSE CSS interrupt	RCC HSE CSS interrupt	Direct C	No	CPU1 and CPU2
45	BLE interrupts	BLE, RADIO, & RF_FSM interrupts	Direct B	No	CPU2(2)
46	Reserved	-	-	-	-
47	Reserved	-	-	-	-
48	CDBGPWRUPREQ	Debug power up request wakeup	Direct	No	CPU1 and CPU2

1. For correct operation the EXTI direct event C2IMRx.IMn bit must be set to 0 before CPU1 uses this direct event.
2. For correct operation the EXTI direct event C1IMRx.IMn bit must be set to 0 before CPU2 uses this direct event.
3. For correct operation the EXTI configurable event both C2IMRx.IMn and C2EMRx.EMn bits must be set to 0 before CPU1 uses this configurable event.
4. For correct operation the EXTI configurable event both C1IMRx.IMn and C1EMRx.EMn bits must be set to 0 before CPU2 uses this configurable event.

14 Extended interrupt and event controller (EXTI)

The Extended interrupt and event controller (EXTI) manages the individual CPU and system wakeup through configurable and direct event inputs. It provides wakeup requests to the power control, and generates an interrupt request to the CPUs interrupt controller and events to the CPUs event input. For each CPU an additional event generation block (EVG) is needed to generate the CPU event signal.

The EXTI wakeup requests allow the system to be woken up from STOP modes, and the CPU to be woken up from the CSTOP and CSTANDBY modes.

The interrupt request and event request generation can also be used in RUN modes.

14.1 EXTI main features

The EXTI main features are the following:

- 49 input events supported
- Two CPUs supported
- All event inputs allow to wake up the system
- Events which do not have an associated wakeup flag in the peripheral, have a flag in the EXTI and generate an interrupt to the CPU from the EXTI
- Some events can be used to generate a CPU wakeup event

The asynchronous event inputs are classified in two groups:

- Configurable events (signals from I/Os or peripherals able to generate a pulse)
  - Configurable events have the following features:
    - Selectable active trigger edge
    - Interrupt pending status register bit.
    - Individual interrupt and event generation mask, used for conditioning the CPU wakeup, interrupt and event generation
    - SW trigger possibility
- Direct events (interrupt and wakeup sources from peripherals having an associated flag which requiring to be cleared in the peripheral)
  - Direct events have the following features:
    - Fixed rising edge active trigger
    - No interrupt pending status register bit in the EXTI (the interrupt pending status flag is provided by the peripheral generating the event)
    - Individual interrupt and event generation mask, used for conditioning the CPU wakeup and event generation
    - No SW trigger possibility

14.2 EXTI block diagram

The EXTI consists of a register block accessed via an AHB interface, the event input Trigger block, and the masking block as shown in *Figure 28*.

The register block contains all the EXTI registers.

The event input trigger block provides event input edge trigger logic.

The masking block provides the event input distribution to the different wakeup, interrupt and event outputs, and the masking of these.

Figure 28. EXTI block diagram

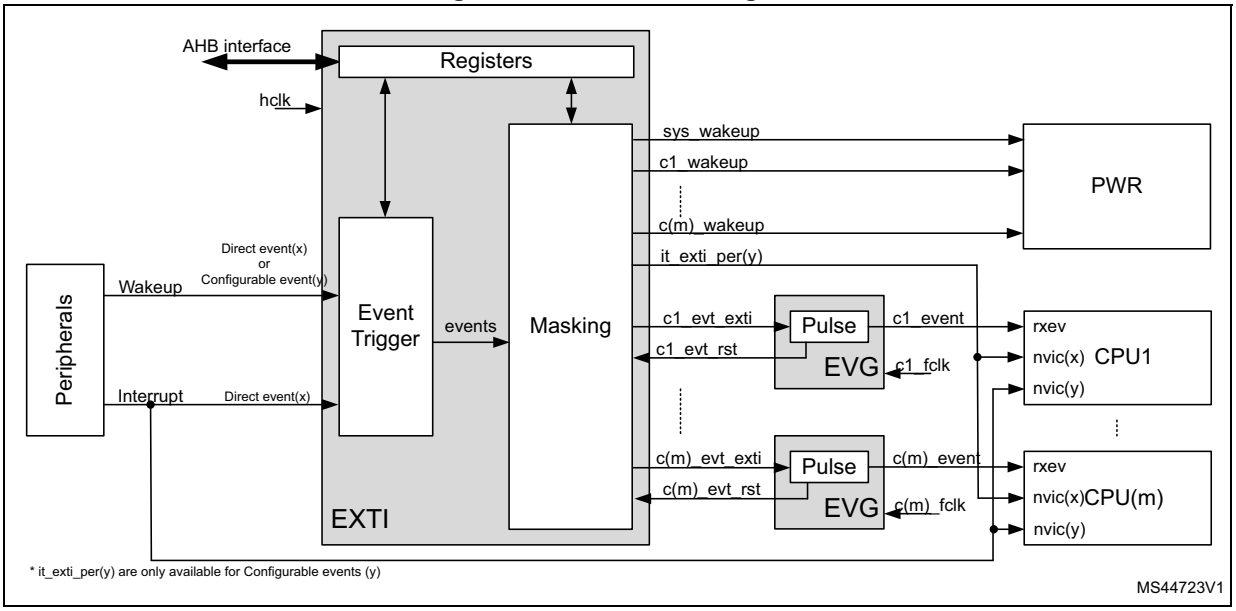

Table 59. EXTI pin overview

Pin name	I/O	Description
AHB interface	I/O	EXTI register bus interface. When one event is configured to allow security, the AHB interface supports secure accesses.
hclk	I	AHB bus clock and EXTI system clock.
Configurable event(y)	I	Asynchronous wakeup events from peripherals that do not have an associated interrupt and flag in the peripheral.
Direct event(x)	I	Synchronous and asynchronous wakeup events from peripherals having an associated interrupt and flag in the peripheral.
it_exti_per (y)	O	Interrupts to the CPU1 to CPU(m) associated with Configurable event (y).
c(m)_evt_exti	O	High level sensitive event output for CPU(m) synchronous to hclk. (m= 1 to 2)
c(m)_evt_rst	I	Asynchronous reset input to clear c(m)_evt_exti. (m= 1 to 2)
sys_wakeup	O	Asynchronous system wakeup request to PWR for ck_sys and hclk.
c(m)_wakeup	O	Wakeup request to PWR for CPU(m), synchronous to hclk. (m= 1 to 2)

Table 60. EVG pin overview

Pin name	I/O	Description
c_fclk	I	CPU free running clock.
c_evt_in	I	High level sensitive Events input from EXTI, asynchronous to CPU clock.
c_event	O	Event pulse, synchronous to CPU clock.
c_evt_rst	O	Event reset signal, synchronous to CPU clock.

14.2.1 EXTI connections between peripherals and CPU

The peripherals able to generate wakeup or interrupt events when the system is in STOP mode or a CPU is in CSTOP mode are connected to the EXTI.

- Peripheral wakeup signals that generate a pulse or which do not have an interrupt status bits in the peripheral, are connected to an EXTI configurable event input. For these events the EXTI provides a status pending bit that has to be cleared. It is the EXTI interrupt associated with the status bit that will interrupt the CPU.
- Peripheral interrupt and wakeup signals that have a status bit in the peripheral that has to be cleared in the peripheral, are connected to an EXTI direct event input. There is no status pending bit within the EXTI. The interrupt or wakeup is cleared by the CPU in the peripheral. It is the peripheral interrupt that will interrupt the CPU directly.

The EXTI configurable event interrupts are connected to the respective interrupt controller of each CPU(m).

The dedicated EXTI/EVG CPU(m) event is connected to the respective CPU(m) rxev input.

The EXTI CPU(m) wakeup signals are connected to the PWR block, and are used to wake up the system and CPU(m) sub-system bus clocks.

14.3 EXTI functional description

Depending on the EXTI event input type and wakeup target(s), different logic implementations are used. The applicable features are controlled from register bits:

- Active trigger edge enable, by rising edge selection
  EXTI rising trigger selection register (EXTI_RTSR1),
  EXTI rising trigger selection register (EXTI_RTSR2),
  and falling edge selection
  EXTI falling trigger selection register (EXTI_FTSR1),
  EXTI falling trigger selection register (EXTI_FTSR2).
- Software trigger, by
  EXTI software interrupt event register (EXTI_SWIER1),
  EXTI software interrupt event register (EXTI_SWIER2).
- Interrupt pending flag, by
  EXTI pending register (EXTI_PR1),
  EXTI pending register (EXTI_PR2).
- CPU wakeup and interrupt enable, by
  EXTI CPU wakeup with interrupt mask register (EXTI_IMR1),
  EXTI CPU2 wakeup with interrupt mask register (EXTI_C2IMR1),
  EXTI CPU wakeup with interrupt mask register (EXTI_IMR2),
  EXTI CPU2 wakeup with interrupt mask register (EXTI_C2IMR2).
- CPU wakeup and event enable, by
  EXTI CPU wakeup with event mask register (EXTI_EMR1),
  EXTI CPU2 wakeup with event mask register (EXTI_C2EMR1)
  EXTI CPU wakeup with event mask register (EXTI_EMR2),
  EXTI CPU2 wakeup with event mask register (EXTI_C2EMR2).

Table 61. EXTI event input configurations and register control

Event input type	Logic implementation	EXTI_RTSR	EXTI_FTSR	EXTI_SWIER	EXTI_PR	EXTI_CmIMR	EXTI_CmEMR(1)
Configurable	Configurable event input wakeup logic	x	x	x	x	x	x
Direct	Direct event input wakeup logic	-	-	-	-	x	x

1. Only for input events with configuration “rxev generation” enabled.

14.3.1 EXTI configurable event input wakeup

Figure 29 is a detailed representation of the logic associated with configurable event inputs which will wake up the CPU(m) sub-system bus clocks and generated an EXTI pending flag and interrupt to the CPU(m) and or a CPU(m) wakeup event.

Figure 29. Configurable event trigger logic CPU wakeup

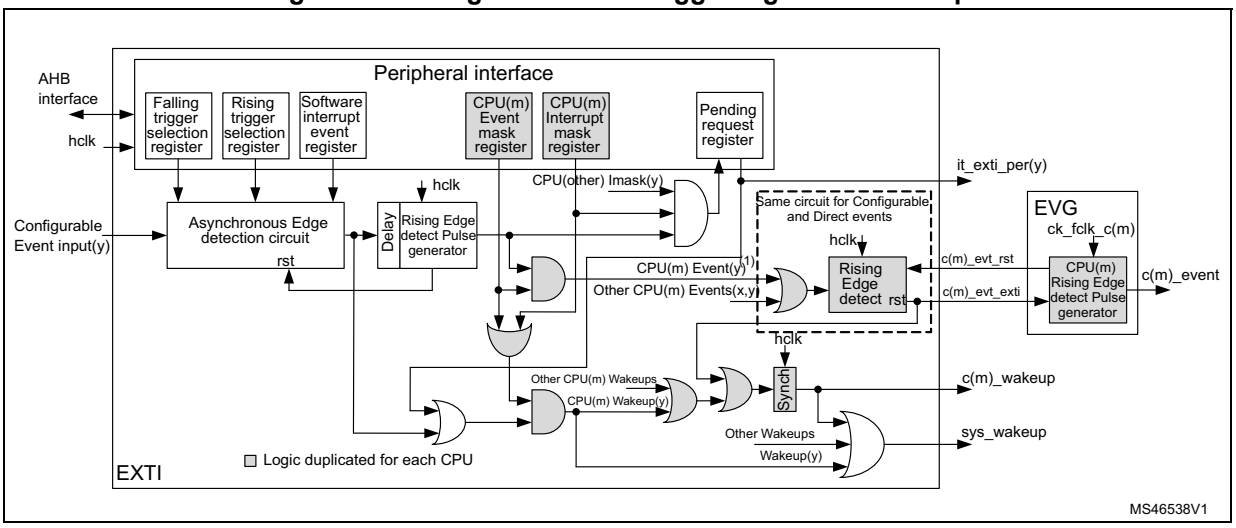

1. Only for the input events that support CPU rxev generation c(n)_event.

The software interrupt event register allows to trigger configurable events by software, writing the corresponding register bit, irrespective of the edge selection setting.

The rising edge and falling edge selection registers allow to enable and select the configurable event active trigger edge or both edges.

Each CPU has its dedicated interrupt mask register and a dedicated event mask registers. The enabled event allows to generate an event on the CPU. All events for a CPU are OR-ed together into a single CPU event signal. The event pending register (EXTI_PR) is not set for an unmasked CPU event.

The configurable events have unique interrupt pending request registers, shared by the CPUs. The pending register is only set for an unmasked interrupt. Each configurable event provides a common interrupt to all CPUs. The configurable event interrupts need to be acknowledged by software in the EXTI_PR register.

When a CPU(m) interrupt or CPU(m) event is enabled the asynchronous edge detection circuit is reset by the clocked delay and rising edge detect pulse generator. This guarantees that the EXTI hclk clock is woken up before the asynchronous edge detection circuit is reset.

Note: A detected configurable event interrupt pending request, may be cleared by any CPU. The system is unable to enter into Low-power modes as long as an interrupt pending request is active.

14.3.2 EXTI direct event input wakeup

Figure 30 is a detailed representation of the logic associated with direct event inputs waking up the system.

The direct events do not have an associated EXTI interrupt. The EXTI only wakes up the system and CPU sub-system clocks and may generate a CPU wakeup event. The peripheral synchronous interrupt, associated with the direct wakeup event wakes up the CPU.

The EXTI direct event is able to generate a CPU event. This CPU event wakes up the CPU. The CPU event may occur before the associated Peripheral interrupt flag is set.

Note: The direct events are cleared in the peripheral generating the event. When a direct event input enabled by CPU(m) is cleared by another CPU before the CPU(m) clock is running, the CPU(m) no longer receives a CPU(m) interrupt nor a CPU(m) event and does not wake up. However the system stays in RUN mode, generating the CPU(m) clock. For this reason CPU(m) direct events must NOT be cleared by the other CPU.

Figure 30. Direct event trigger logic CPU wakeup

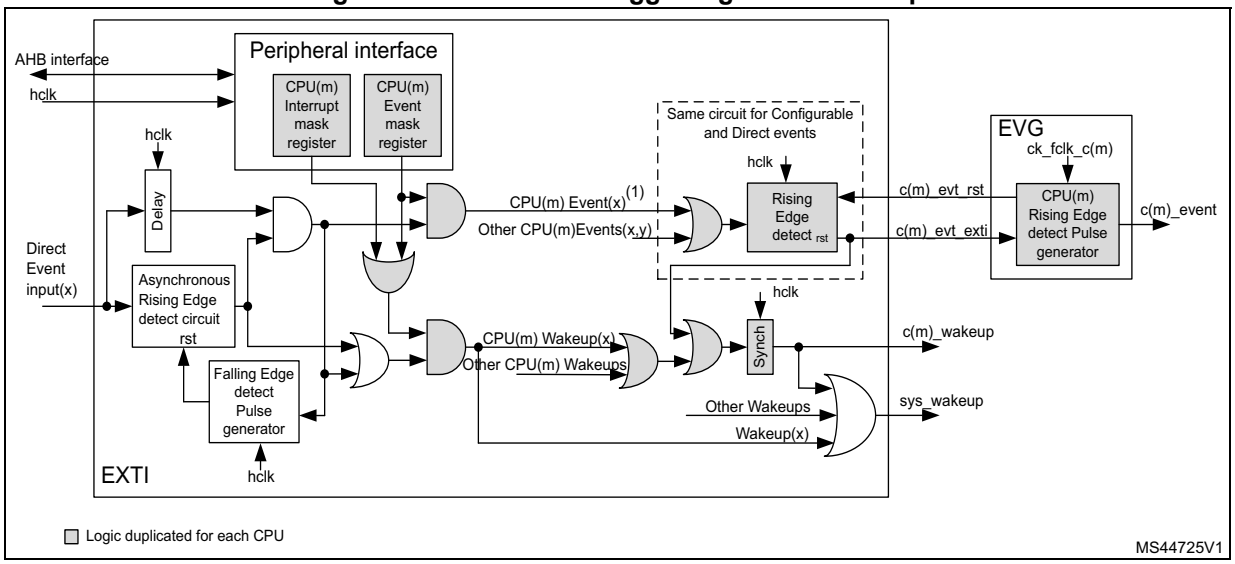

1. Only for the input events that support CPU rxev generation c(n)_event.

14.4 EXTI functional behavior

The direct event inputs are enabled in the respective peripheral generating the wakeup event. The configurable events are enabled by enabling at least one of the trigger edges.

Once an event input is enabled, the generation of a CPU(m) wakeup is conditioned by the CPU(m) interrupt mask and CPU(m) event mask.

Table 62. Masking functionality

CPU interrupt enable EXTI_CmIMR.IMn	CPU event enable EXTI_CmEMR.EMn	Configurable event inputs EXTI_PR.PIFn	exti(n) interrupt(1)	CPU(m) event	CPU(m) wakeup
0 for all CPUs	0	No	Masked	Masked	Masked
	1		Masked	Yes	Yes
1 for any CPU	0	Status latched	Yes	Masked	Yes(2)
	1		Yes	Yes	Yes

1. The single exti(n) interrupt goes to all CPUs. If no interrupt is required for CPU(m), the exti(n) interrupt must be masked in the CPU(m) interrupt controller.
2. Only if CPU(m) interrupt is enabled in EXTI_CmIMR.IMn.

For configurable event inputs, when the enabled edge(s) occur on the event input, an event request is generated. When the associated CPU(m) interrupt is unmasked the corresponding pending bit EXTI_PR.PIFn is set and the CPU(m) sub-system is woken up and CPU interrupt signal is activated. The EXTI_PR.PIFn pending bit must be cleared by software writing, it to ‘1’. This clears the CPU interrupt.

For direct event inputs, when enabled in the associated peripheral, an event request is generated on the rising edge only. There is no corresponding CPU pending bit in the EXTI. When the associated CPU(m) interrupt is unmasked the corresponding CPU sub-system is woken up. The CPU is woken up (interrupted) by the peripheral synchronous interrupt.

The CPU(m) event must be unmasked to generate an event. When the enabled edge(s) occur on the event input a CPU(m) event pulse is generated. There is no event pending bit.

For the configurable event inputs an event request can be generated by software when writing a ‘1’ in the software interrupt/event register EXTI_SWIER, generating a rising edge on the event. The edge event pending bit is set in EXTI_PR, irrespective of the setting in EXTI_RTSR.

14.5 EXTI registers

The EXTI register map is divided as detailed in *Table 63*.

Table 63. EXTI register map sections

Address	Description
0x000 - 0x01C	General configurable event [31:0] configuration
0x020 - 0x03C	General configurable event [63:32] configuration
0x040 - 0x05C	General configurable event [95:64] configuration
0x080 - 0x0BC	CPU1 input event configuration
0x0C0 - 0x0FC	CPU2 input event configuration

All the registers can be accessed with word (32-bit), half-word (16-bit) and byte (8-bit) access.

14.5.1 EXTI rising trigger selection register (EXTI_RTSR1)

Address offset: 0x000

Reset value: 0x0000 0000

Contains only register bits for configurable events.

31	30	29	28	27	26	25	24	23	22	21	20	19	18	17	16
Res.	Res.	Res.	Res.	Res.	Res.	Res.	Res.	Res.	Res.	Res.	RT20	RT19	RT18	RT17	RT16
											rw	rw	rw	rw	rw
15	14	13	12	11	10	9	8	7	6	5	4	3	2	1	0
RT15	RT14	RT13	RT12	RT11	RT10	RT9	RT8	RT7	RT6	RT5	RT4	RT3	RT2	RT1	RT0
rw	rw	rw	rw	rw	rw	rw	rw	rw	rw	rw	rw	rw	rw	rw	rw

Bits 31:21 Reserved, must be kept at reset value.

Bits 20:0 **RT[20:0]:** Rising trigger event configuration bit of configurable event input x (x = 20 to 0)[1].
0: Rising trigger disabled (for event and Interrupt) for input line
1: Rising trigger enabled (for event and Interrupt) for input line

1. The configurable event inputs are edge triggered, no glitch must be generated on these inputs. If a rising edge on the configurable event input occurs during writing of the register, the associated pending bit is not set. Rising and falling edge triggers can be set for the same configurable event input. In this case, both edges generate a trigger.

14.5.2 EXTI falling trigger selection register (EXTI_FTSR1)

Address offset: 0x004

Reset value: 0x0000 0000

Contains only register bits for configurable events.

31	30	29	28	27	26	25	24	23	22	21	20	19	18	17	16
Res.	Res.	Res.	Res.	Res.	Res.	Res.	Res.	Res.	Res.	Res.	FT20	FT19	FT18	FT17	FT16
											rw	rw	rw	rw	rw
15	14	13	12	11	10	9	8	7	6	5	4	3	2	1	0
FT15	FT14	FT13	FT12	FT11	FT10	FT9	FT8	FT7	FT6	FT5	FT4	FT3	FT2	FT1	FT0
rw	rw	rw	rw	rw	rw	rw	rw	rw	rw	rw	rw	rw	rw	rw	rw

Bits 31:21 Reserved, must be kept at reset value.

Bits 20:0 **FT[20:0]:** Falling trigger event configuration bit of configurable event input x (x = 20 to 0)[(1)].
0: Falling trigger disabled (for event and Interrupt) for input line
1: Falling trigger enabled (for event and Interrupt) for input line.

1. The configurable event inputs are edge triggered, no glitch must be generated on these inputs. If a falling edge on the configurable event input occurs during writing of the register, the associated pending bit is not set. Rising and falling edge triggers can be set for the same configurable event input. In this case, both edges generate a trigger.

14.5.3 EXTI software interrupt event register (EXTI_SWIER1)

Address offset: 0x008

Reset value: 0x0000 0000

Contains only register bits for configurable events.

31	30	29	28	27	26	25	24	23	22	21	20	19	18	17	16
Res.	Res.	Res.	Res.	Res.	Res.	Res.	Res.	Res.	Res.	Res.	SWI20	SWI19	SWI18	SWI17	SWI16
											rw	rw	rw	rw	rw
15	14	13	12	11	10	9	8	7	6	5	4	3	2	1	0
SWI15	SWI14	SWI13	SWI12	SWI11	SWI10	SWI9	SWI8	SWI7	SWI6	SWI5	SWI4	SWI3	SWI2	SWI1	SWI0
rw	rw	rw	rw	rw	rw	rw	rw	rw	rw	rw	rw	rw	rw	rw	rw

Bits 31:21 Reserved, must be kept at reset value.

Bits 20:0 **SWI[20:0]:** Software interrupt on event x (x = 20 to 0)
A software interrupt is generated independent from the setting in EXTI_RTSR and EXTI_FTSR. Will always return 0 when read.
0: Writing 0 has no effect.
1: Writing a 1 to this bit will trigger a rising edge event on event x.
This bit is auto cleared by HW.

14.5.4 EXTI pending register (EXTI_PR1)

Address offset: 0x00C

Reset value: 0x0000 0000

Contains only register bits for configurable events.

31	30	29	28	27	26	25	24	23	22	21	20	19	18	17	16
Res.	Res.	Res.	Res.	Res.	Res.	Res.	Res.	Res.	Res.	Res.	PIF20	PIF19	PIF18	PIF17	PIF16
											rc_w1	rc_w1	rc_w1	rc_w1	rc_w1
15	14	13	12	11	10	9	8	7	6	5	4	3	2	1	0
PIF15	PIF14	PIF13	PIF12	PIF11	PIF10	PIF9	PIF8	PIF7	PIF6	PIF5	PIF4	PIF3	PIF2	PIF1	PIF0
rc_w1	rc_w1	rc_w1	rc_w1	rc_w1	rc_w1	rc_w1	rc_w1	rc_w1	rc_w1	rc_w1	rc_w1	rc_w1	rc_w1	rc_w1	rc_w1

Bits 31:21 Reserved, must be kept at reset value.

Bits 20:0 **PIF[20:0]:** configurable event inputs x (x = 20 to 0) Pending bit.
0: No trigger request occurred
1: Selected trigger request occurred
This bit is set when the selected edge event or an EXTI_SWIER software trigger arrives on the configurable event line. This bit is cleared by writing a 1 into the bit.

14.5.5 EXTI rising trigger selection register (EXTI_RTSR2)

Address offset: 0x020

Reset value: 0x0000 0000

Contains only register bits for configurable events.

31	30	29	28	27	26	25	24	23	22	21	20	19	18	17	16
Res.	Res.	Res.	Res.	Res.	Res.	Res.	Res.	Res.	Res.	Res.	Res.	Res.	Res.	Res.	Res.
15	14	13	12	11	10	9	8	7	6	5	4	3	2	1	0
Res.	Res.	Res.	Res.	Res.	Res.	RT41	RT40	Res.	Res.	Res.	Res.	Res.	Res.	RT33	Res.
						rw	rw							rw	

Bits 31:10 Reserved, must be kept at reset value.

Bit 9 **RT41:** Rising trigger event configuration bit of configurable event input 41[(1)]
0: Rising trigger disabled (for event and interrupt) for input line
1: Rising trigger enabled (for event and interrupt) for input line

Bit 8 **RT40:** Rising trigger event configuration bit of configurable event input 40[(1)]
0: Rising trigger disabled (for event and interrupt) for input line
1: Rising trigger enabled (for event and interrupt) for input line

Bits 7:2 Reserved, must be kept at reset value.

Bit 1 **RT33:** Rising trigger event configuration bit of configurable event input 33[(1)]
0: Rising trigger disabled (for event and interrupt) for input line
1: Rising trigger enabled (for event and interrupt) for input line

Bit 0 Reserved, must be kept at reset value.

1. The configurable event inputs are edge triggered, no glitch must be generated on these inputs. If a rising edge on the configurable event input occurs during writing of the register, the associated pending bit is not set. Rising and falling edge triggers can be set for the same configurable Event input. In this case, both edges generate a trigger.

14.5.6 EXTI falling trigger selection register (EXTI_FTSR2)

Address offset: 0x024

Reset value: 0x0000 0000

Contains only register bits for configurable events.

31	30	29	28	27	26	25	24	23	22	21	20	19	18	17	16
Res.	Res.	Res.	Res.	Res.	Res.	Res.	Res.	Res.	Res.	Res.	Res.	Res.	Res.	Res.	Res.
15	14	13	12	11	10	9	8	7	6	5	4	3	2	1	0
Res.	Res.	Res.	Res.	Res.	Res.	FT41	FT40	Res.	Res.	Res.	Res.	Res.	Res.	FT33	Res.
						rw	rw							rw	

Bits 31:10 Reserved, must be kept at reset value.

Bit 9 **FT41:** Falling trigger event configuration bit of configurable event input 41[(1)]
0: Falling trigger disabled (for event and interrupt) for input line
1: Falling trigger enabled (for event and interrupt) for input line

Bit 8 **FT40:** Falling trigger event configuration bit of configurable event input 40[(1)]
0: Falling trigger disabled (for event and interrupt) for input line
1: Falling trigger enabled (for event and interrupt) for input line

Bits 7:2 Reserved, must be kept at reset value.

Bit 1 **FT33:** Falling trigger event configuration bit of configurable event input 33[(1)]
0: Falling trigger disabled (for event and interrupt) for input line
1: Falling trigger enabled (for event and interrupt) for input line

Bit 0 Reserved, must be kept at reset value.

1. The configurable event inputs are edge triggered, no glitch must be generated on these inputs. If a falling edge on the configurable event input occurs during writing of the register, the associated pending bit is not set. Rising and falling edge triggers can be set for the same configurable event input. In this case, both edges generate a trigger.

14.5.7 EXTI software interrupt event register (EXTI_SWIER2)

Address offset: 0x028

Reset value: 0x0000 0000

Contains only register bits for configurable events.

31	30	29	28	27	26	25	24	23	22	21	20	19	18	17	16
Res.	Res.	Res.	Res.	Res.	Res.	Res.	Res.	Res.	Res.	Res.	Res.	Res.	Res.	Res.	Res.
15	14	13	12	11	10	9	8	7	6	5	4	3	2	1	0
Res.	Res.	Res.	Res.	Res.	Res.	SWI41	SWI40	Res.	Res.	Res.	Res.	Res.	Res.	SWI33	Res.
						rw	rw							rw	

Bits 31:10 Reserved, must be kept at reset value.

Bit 9 **SWI41:** Software interrupt on event 41

A software interrupt is generated independent from the setting in EXTI_RTSR and EXTI_FTSR. Will always return 0 when read.

0: Writing 0 has no effect.

1: Writing a 1 to this bit will trigger a rising edge event on event 41.

This bit is auto cleared by HW.

Bit 8 **SWI40:** Software interrupt on event 40

A software interrupt is generated independent from the setting in EXTI_RTSR and EXTI_FTSR. Will always return 0 when read.

0: Writing 0 has no effect.

1: Writing a 1 to this bit will trigger a rising edge event on event 40.

This bit is auto cleared by HW.

Bits 7:2 Reserved, must be kept at reset value.

Bit 1 **SWI33:** Software interrupt on event 33

A software interrupt is generated independent from the setting in EXTI_RTSR and EXTI_FTSR. Will always return 0 when read.

0: Writing 0 has no effect.

1: Writing a 1 to this bit will trigger a rising edge event on event 33.

This bit is auto cleared by HW.

Bit 0 Reserved, must be kept at reset value.

14.5.8 EXTI pending register (EXTI_PR2)

Address offset: 0x02C

Reset value: 0x0000 0000

Contains only register bits for configurable events.

31	30	29	28	27	26	25	24	23	22	21	20	19	18	17	16
Res.	Res.	Res.	Res.	Res.	Res.	Res.	Res.	Res.	Res.	Res.	Res.	Res.	Res.	Res.	Res.
15	14	13	12	11	10	9	8	7	6	5	4	3	2	1	0
Res.	Res.	Res.	Res.	Res.	Res.	PIF41	PIF40	Res.	Res.	Res.	Res.	Res.	Res.	PIF33	Res.
						rc_w1	rc_w1							rc_w1	

Bits 31:10 Reserved, must be kept at reset value.

Bit 9 **PIF41:** configurable event inputs 41 pending bit

0: No trigger request occurred

1: selected trigger request occurred

This bit is set when the selected edge event or an EXTI_SWIER software trigger arrives on the configurable event line. This bit is cleared by writing a 1 into the bit.

Bit 8 **PIF40:** configurable event inputs 40 pending bit

0: No trigger request occurred

1: selected trigger request occurred

This bit is set when the selected edge event or an EXTI_SWIER software trigger arrives on the configurable event line. This bit is cleared by writing a 1 into the bit.

Bits 7:2 Reserved, must be kept at reset value.

Bit 1 **PIF33:** configurable event inputs 33 pending bit

0: No trigger request occurred
1: selected trigger request occurred

This bit is set when the selected edge event or an EXTI_SWIER software trigger arrives on the configurable event line. This bit is cleared by writing a 1 into the bit.

Bit 0 Reserved, must be kept at reset value.

14.5.9 EXTI CPU wakeup with interrupt mask register (EXTI_IMR1)

Address offset: 0x080

Reset value: 0x7FC0 0000

Contains register bits for configurable events and direct events.

31	30	29	28	27	26	25	24	23	22	21	20	19	18	17	16
IM31	IM30	IM29	Res.	Res.	Res.	IM25	IM24	Res.	IM22	Res.	IM20	IM19	IM18	IM17	IM16
rw	rw	rw				rw	rw		rw		rw	rw	rw	rw	rw
15	14	13	12	11	10	9	8	7	6	5	4	3	2	1	0
IM15	IM14	IM13	IM12	IM11	IM10	IM9	IM8	IM7	IM6	IM5	IM4	IM3	IM2	IM1	IM0
rw	rw	rw	rw	rw	rw	rw	rw	rw	rw	rw	rw	rw	rw	rw	rw

Bits 28:26, 23, 21 Reserved, must be kept at reset value.

Bits 31:29, 25:24, 22, 20:0 **IM[31:29, 25:24, 22, 20:0]:** CPU wakeup with interrupt mask on event input x (x = 31:29, 25:24, 22. 20:0)(1)(2).

0: Wakeup with interrupt request from Line x is masked
1: Wakeup with interrupt request from Line x is unmasked

1. The reset value for configurable event inputs is set to ‘0’ in order to disable the interrupt by default.
2. The reset value for direct event inputs is set to ‘1’ in order to enable the interrupt by default.

14.5.10 EXTI CPU2 wakeup with interrupt mask register (EXTI_C2IMR1)

Address offset: 0x0C0

Reset value: 0x7FC0 0000

Contains register bits for configurable events and direct events.

31	30	29	28	27	26	25	24	23	22	21	20	19	18	17	16
IM31	IM30	IM29	Res.	Res.	Res.	IM25	IM24	Res.	IM22	Res.	IM20	IM19	IM18	IM17	IM16
rw	rw	rw				rw	rw		rw		rw	rw	rw	rw	rw
15	14	13	12	11	10	9	8	7	6	5	4	3	2	1	0
IM15	IM14	IM13	IM12	IM11	IM10	IM9	IM8	IM7	IM6	IM5	IM4	IM3	IM2	IM1	IM0
rw	rw	rw	rw	rw	rw	rw	rw	rw	rw	rw	rw	rw	rw	rw	rw

Bits 28:26, 23, 21 Reserved, must be kept at reset value.

Bits 31:29, 25:24, 22, 20:0 **IM[31:29, 25:24, 22, 20:0]:** CPU2 wakeup with interrupt mask on event input x (x = 31:29, 25:24, 22, 20 to 0)(1)(2).

0: Wakeup with interrupt request from Line x is masked
1: Wakeup with interrupt request from Line x is unmasked

1. The reset value for configurable event inputs is set to ‘0’ in order to disable the interrupt by default.
2. The reset value for direct event inputs is set to ‘1’ in order to enable the interrupt by default.

14.5.11 EXTI CPU wakeup with event mask register (EXTI_EMR1)

Address offset: 0x084

Reset value: 0x0000 0000

31	30	29	28	27	26	25	24	23	22	21	20	19	18	17	16
Res.	Res.	Res.	Res.	Res.	Res.	Res.	Res.	Res.	Res.	Res.	EM20	EM19	EM18	EM17	Res.
											rw	rw	rw	rw	
15	14	13	12	11	10	9	8	7	6	5	4	3	2	1	0
EM15	EM14	EM13	EM12	EM11	EM10	EM9	EM8	EM7	EM6	EM5	EM4	EM3	EM2	EM1	EM0
rw	rw	rw	rw	rw	rw	rw	rw	rw	rw	rw	rw	rw	rw	rw	rw

Bits 31:21 Reserved, must be kept at reset value.

Bits 20:17 **EM[20:17]:** CPU wakeup with event generation mask on event input x (x = 20 to 17)
0: Wakeup with event generation from Line x is masked
1: Wakeup with event generation from Line x is unmasked

Bit 16 Reserved, must be kept at reset value.

Bits 15:0 **EM[15:0]:** CPU wakeup with event generation mask on event input x (x = 15 to 0)
0: Wakeup with event generation from Line x is masked
1: Wakeup with event generation from Line x is unmasked

14.5.12 EXTI CPU2 wakeup with event mask register (EXTI_C2EMR1)

Address offset: 0x0C4

Reset value: 0x0000 0000

31	30	29	28	27	26	25	24	23	22	21	20	19	18	17	16
Res.	Res.	Res.	Res.	Res.	Res.	Res.	Res.	Res.	Res.	Res.	EM20	EM19	EM18	EM17	Res.
											rw	rw	rw	rw	
15	14	13	12	11	10	9	8	7	6	5	4	3	2	1	0
EM15	EM14	EM13	EM12	EM11	EM10	EM9	EM8	EM7	EM6	EM5	EM4	EM3	EM2	EM1	EM0
rw	rw	rw	rw	rw	rw	rw	rw	rw	rw	rw	rw	rw	rw	rw	rw

Bits 31:21 Reserved, must be kept at reset value.

Bits 20:17 **EM[20:]:** CPU2 wakeup with event generation mask on event input x (x = 20 to 17)
0: Wakeup with event generation from Line x is masked
1: Wakeup with event generation from Line x is unmasked

Bit 16 Reserved, must be kept at reset value.

Bits 15:0 **EM[15:0]:** CPU2 wakeup with event generation mask on event input x (x = 15 to 0)
0: Wakeup with event generation from Line x is masked
1: Wakeup with event generation from Line x is unmasked

14.5.13 EXTI CPU wakeup with interrupt mask register (EXTI_IMR2)

Address offset: 0x090

Reset value: 0x0001 FCFD

Contains register bits for configurable events and direct events.

31	30	29	28	27	26	25	24	23	22	21	20	19	18	17	16
Res.	Res.	Res.	Res.	Res.	Res.	Res.	Res.	Res.	Res.	Res.	Res.	Res.	Res.	Res.	IM48
															rw
15	14	13	12	11	10	9	8	7	6	5	4	3	2	1	0
Res.	Res.	IM45	IM44	Res.	IM42	IM41	IM40	IM39	IM38	IM37	IM36	Res.	Res.	IM33	Res.
		rw	rw		rw	rw	rw	rw	rw	rw	rw			rw	

Bits 31:17, 15:14, 11, 3:2, 0 Reserved, must be kept at reset value.

Bits 16, 13:12, 10:4, 1 **IM[48, 45:44, 42:36, 33]:** CPU wakeup with interrupt mask on event input x (x = 48, 45 to 44, 42 to 36, 33)(1)(2)

0: Wakeup with interrupt request from Line x is masked
1: Wakeup with interrupt request from Line x is unmasked

1. The reset value for configurable event inputs is set to ‘0’ in order to disable the interrupt by default.
2. The reset value for direct event inputs is set to ‘1’ in order to enable the interrupt by default.

14.5.14 EXTI CPU2 wakeup with interrupt mask register (EXTI_C2IMR2)

Address offset: 0x0D0

Reset value: 0x0001 FCFD

Contains register bits for configurable events and direct events.

31	30	29	28	27	26	25	24	23	22	21	20	19	18	17	16
Res.	Res.	Res.	Res.	Res.	Res.	Res.	Res.	Res.	Res.	Res.	Res.	Res.	Res.	Res.	IM48
															rw
15	14	13	12	11	10	9	8	7	6	5	4	3	2	1	0
Res.	Res.	IM45	IM44	Res.	IM42	IM41	IM40	IM39	IM38	IM37	IM36	Res.	Res.	IM33	Res.
		rw	rw		rw	rw	rw	rw	rw	rw	rw			rw	

Bits 31:17, 15:14, 11, 3:2, 0 Reserved, must be kept at reset value.

Bits 16, 13:12, 10:4, 1 **IM[48, 45:44, 42:36, 33]:** CPU wakeup with interrupt mask on event input x (x = 48, 45 to 44, 42 to 36, 33)(1)(2)

0: Wakeup with interrupt request from Line x is masked
1: Wakeup with interrupt request from Line x is unmasked

1. The reset value for configurable event inputs is set to ‘0’ in order to disable the interrupt by default.
2. The reset value for direct event inputs is set to ‘1’ in order to enable the interrupt by default.

14.5.15 EXTI CPU wakeup with event mask register (EXTI_EMR2)

Address offset: 0x094

Reset value: 0x0000 0000

31	30	29	28	27	26	25	24	23	22	21	20	19	18	17	16
Res.	Res.	Res.	Res.	Res.	Res.	Res.	Res.	Res.	Res.	Res.	Res.	Res.	Res.	Res.	Res.

15	14	13	12	11	10	9	8	7	6	5	4	3	2	1	0
Res.	Res.	Res.	Res.	Res.	Res.	Res.	EM40	Res.	Res.	Res.	Res.	Res.	Res.	Res.	Res.
							rw								

Bits 31:9 Reserved, must be kept at reset value.

Bit 8 **EM40:** CPU wakeup with event generation mask on event input 40.
0: Wakeup with event generation from Line 40 is masked
1: Wakeup with event generation from Line 40 is unmasked

Bits 7:0 Reserved, must be kept at reset value.

14.5.16 EXTI CPU2 wakeup with event mask register (EXTI_C2EMR2)

Address offset: 0x0D4

Reset value: 0x0000 0000

31	30	29	28	27	26	25	24	23	22	21	20	19	18	17	16
Res.	Res.	Res.	Res.	Res.	Res.	Res.	Res.	Res.	Res.	Res.	Res.	Res.	Res.	Res.	Res.

15	14	13	12	11	10	9	8	7	6	5	4	3	2	1	0
Res.	Res.	Res.	Res.	Res.	Res.	EM41	Res.	Res.	Res.	Res.	Res.	Res.	Res.	Res.	Res.
						rw									

Bits 31:10 Reserved, must be kept at reset value.

Bit 9 **EM41:** CPU2 wakeup with event generation mask on event input 41
0: Wakeup with event generation from Line 41 is masked
1: Wakeup with event generation from Line 41 is unmasked

Bits 8:0 Reserved, must be kept at reset value.

14.5.17 EXTI register map

The following table gives the EXTI register map and the reset values.

Table 64. EXTI register map and reset values

Offset	Register	31	30	29	28	27	26	25	24	23	22	21	20	19	18	17	16	15	14	13	12	11	10	9	8	7	6	5	4	3	2	1	0
0x000	**EXTI_RTSR1**	Res.	Res.	Res.	Res.	Res.	Res.	Res.	Res.	Res.	Res.	Res.	RT[20:0]																				
	Reset value												0	0	0	0	0	0	0	0	0	0	0	0	0	0	0	0	0	0	0	0	0
0x004	**EXTI_FTSR1**	Res.	Res.	Res.	Res.	Res.	Res.	Res.	Res.	Res.	Res.	Res.	FT[20:0]																				
	Reset value												0	0	0	0	0	0	0	0	0	0	0	0	0	0	0	0	0	0	0	0	0
0x008	**EXTI_SWIER1**	Res.	Res.	Res.	Res.	Res.	Res.	Res.	Res.	Res.	Res.	Res.	SWI[20:0]																				
	Reset value												0	0	0	0	0	0	0	0	0	0	0	0	0	0	0	0	0	0	0	0	0
0x00C	**EXTI_PR1**	Res.	Res.	Res.	Res.	Res.	Res.	Res.	Res.	Res.	Res.	Res.	PIF[20:0]																				
	Reset value												0	0	0	0	0	0	0	0	0	0	0	0	0	0	0	0	0	0	0	0	0
0x020	**EXTI_RTSR2**	Res.	Res.	Res.	Res.	Res.	Res.	Res.	Res.	Res.	Res.	Res.	Res.	Res.	Res.	Res.	Res.	Res.	Res.	Res.	Res.	Res.	Res.	RT [41:40]		Res.	Res.	Res.	Res.	Res.	Res.	RT33	Res.
	Reset value																							0	0							0	
0x024	**EXTI_FTSR2**	Res.	Res.	Res.	Res.	Res.	Res.	Res.	Res.	Res.	Res.	Res.	Res.	Res.	Res.	Res.	Res.	Res.	Res.	Res.	Res.	Res.	Res.	FT [41:40]		Res.	Res.	Res.	Res.	Res.	Res.	FT33	Res.
	Reset value																							0	0							0	
0x028	**EXTI_SWIER2**	Res.	Res.	Res.	Res.	Res.	Res.	Res.	Res.	Res.	Res.	Res.	Res.	Res.	Res.	Res.	Res.	Res.	Res.	Res.	Res.	Res.	Res.	SWI [41:40]		Res.	Res.	Res.	Res.	Res.	Res.	SWI33	Res.
	Reset value																							0	0							0	
0x02C	**EXTI_PR2**	Res.	Res.	Res.	Res.	Res.	Res.	Res.	Res.	Res.	Res.	Res.	Res.	Res.	Res.	Res.	Res.	Res.	Res.	Res.	Res.	Res.	Res.	PIF [41:40]		Res.	Res.	Res.	Res.	Res.	Res.	PIF33	Res.
	Reset value																							0	0							0	
0x080	**EXTI_IMR1**	Res.	IM [30:29]		Res.	Res.	Res.	IM [25:24]		Res.	IM 22	Res.	IM[20:0]																				
	Reset value		1	1				1	1		1		0	0	0	0	0	0	0	0	0	0	0	0	0	0	0	0	0	0	0	0	0
0x084	**EXTI_EMR1**	Res.	Res.	Res.	Res.	Res.	Res.	Res.	Res.	Res.	Res.	Res.	EM[20:17]				Res.	EM[15:0]															
	Reset value												0	0	0	0		0	0	0	0	0	0	0	0	0	0	0	0	0	0	0	0
0x088-0x08C	Reserved	Res.	Res.	Res.	Res.	Res.	Res.	Res.	Res.	Res.	Res.	Res.	Res.	Res.	Res.	Res.	Res.	Res.	Res.	Res.	Res.	Res.	Res.	Res.	Res.	Res.	Res.	Res.	Res.	Res.	Res.	Res.	Res.
0x090	**EXTI_IMR2**	Res.	Res.	Res.	Res.	Res.	Res.	Res.	Res.	Res.	Res.	Res.	Res.	Res.	Res.	Res.	IM[48]	Res.	Res.	IM [45:44]			IM [42:36]							Res.	Res.	IM[33]	Res.
	Reset value																1			1	1		1	0	0	1	1	1	1			0	
0x094	**EXTI_EMR2**	Res.	Res.	Res.	Res.	Res.	Res.	Res.	Res.	Res.	Res.	Res.	Res.	Res.	Res.	Res.	Res.	Res.	Res.	Res.	Res.	Res.	Res.	Res.	EM:40	Res.	Res.	Res.	Res.	Res.	Res.	Res.	Res.
	Reset value																								0								
0x0C0	**EXTI_C2IMR1**	Res.	IM [30:29]		Res.	Res.	Res.	IM [24:25]		Res.	IM 22	Res.	IM[20:0]																				
	Reset value		1	1				1	1		1		0	0	0	0	0	0	0	0	0	0	0	0	0	0	0	0	0	0	0	0	0
0x0C4	**EXTI_C2EMR1**	Res.	Res.	Res.	Res.	Res.	Res.	Res.	Res.	Res.	Res.	Res.	EM[20:17]				Res.	EM[15:0]															
	Reset value												0	0	0	0		0	0	0	0	0	0	0	0	0	0	0	0	0	0	0	0

Table 64. EXTI register map and reset values (continued)

Offset	Register	31	30	29	28	27	26	25	24	23	22	21	20	19	18	17	16	15	14	13	12	11	10	9	8	7	6	5	4	3	2	1	0
0x0C4	**EXTI_C2EMR1**	Res.	Res.	Res.	Res.	Res.	Res.	Res.	Res.	Res.	Res.	Res.	EM[20:17]				Res.	EM[15:0]															
	Reset value												0	0	0	0		0	0	0	0	0	0	0	0	0	0	0	0	0	0	0
0x0D0	**EXTI_C2IMR2**	Res.	Res.	Res.	Res.	Res.	Res.	Res.	Res.	Res.	Res.	Res.	Res.	Res.	Res.	Res.	IM 48	Res.	Res.	IM [45:44]		Res.	IM [42:36]							Res.	Res.	IM 33	Res.
	Reset value																1			1	1		1	0	0	1	1	1	1			0	
0x0D4	**EXTI_C2EMR2**	Res.	Res.	Res.	Res.	Res.	Res.	Res.	Res.	Res.	Res.	Res.	Res.	Res.	Res.	Res.	Res.	Res.	Res.	Res.	Res.	Res.	Res.	EM41	Res.	Res.	Res.	Res.	Res.	Res.	Res.	Res.	Res.
	Reset value																							0									

Refer to *Section 2.2 on page 55* for the register boundary addresses.

15 Analog-to-digital converter (ADC)

15.1 Introduction

The 12-bit ADC is a successive approximation analog-to-digital converter. It has up to 19 multiplexed channels allowing it to measure signals from 10 external and 3 internal sources. A/D conversion of the various channels can be performed in single, continuous, scan or discontinuous mode. The result of the ADC is stored in a left-aligned or right-aligned 16-bit data register.

The analog watchdog feature allows the application to detect if the input voltage goes outside the user-defined higher or lower thresholds.

An efficient low-power mode is implemented to allow very low consumption at low frequency.

15.2 ADC main features

- High performance
  - 12-bit, 10-bit, 8-bit or 6-bit configurable resolution
  - ADC conversion time: 0.4 µs for 12-bit resolution (2.5Msps), faster conversion times can be obtained by lowering resolution.
  - Self-calibration
  - Programmable sampling time
  - Data alignment with built-in data coherency
  - DMA support
- Low-power
  - The application can reduce PCLK frequency for low-power operation while still keeping optimum ADC performance. For example, 0.4 µs conversion time is kept, whatever the PCLK frequency
  - Wait mode: prevents ADC overrun in applications with low PCLK frequency
  - Auto off mode: ADC is automatically powered off except during the active conversion phase. This dramatically reduces the power consumption of the ADC.
- Analog input channels
  - 10 external analog inputs
  - 1 channel for internal temperature sensor (V_{TS})
  - 1 channel for internal reference voltage (V_{REFINT})
  - 1 channel for monitoring external V_{BAT} power supply pin
- Start-of-conversion can be initiated:
  - By software
  - By hardware triggers with configurable polarity (timer events or GPIO input events)
- Conversion modes
  - Can convert a single channel or can scan a sequence of channels.
  - Single mode converts selected inputs once per trigger
  - Continuous mode converts selected inputs continuously
  - Discontinuous mode
- Interrupt generation at the end of sampling, end of conversion, end of sequence conversion, and in case of analog watchdog or overrun events
- Analog watchdog
- ADC input range: $V_{SSA} \leq V_{IN} \leq V_{DDA}$

15.3 ADC functional description

Figure 31 shows the ADC block diagram and *Table 65* gives the ADC pin description.

Figure 31. ADC block diagram

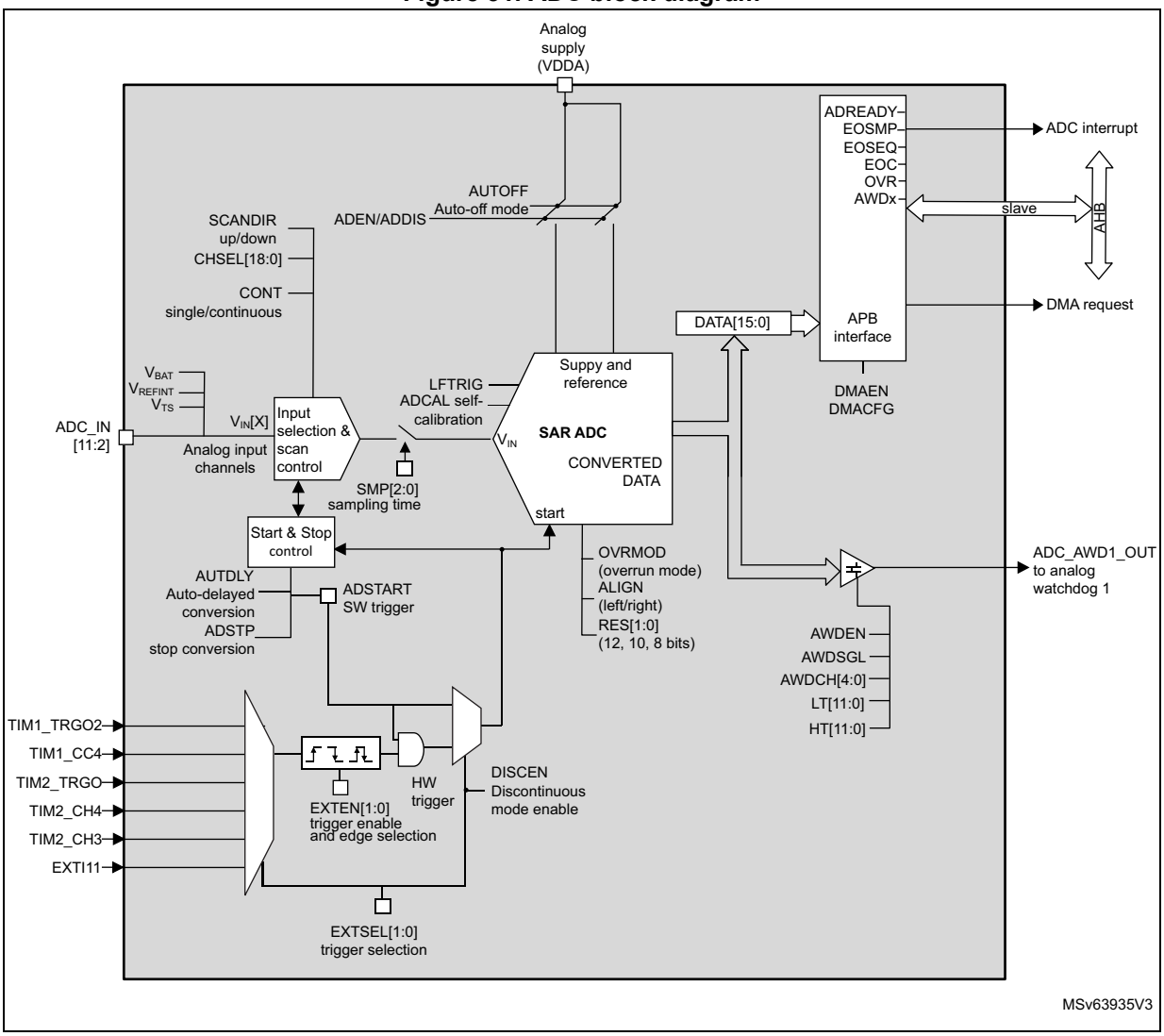

15.3.1 ADC pins and internal signals

Table 65. ADC input/output pins

Name	Signal type	Remarks
VDDA	Input, analog power supply	Analog power supply and positive reference voltage for the ADC
VSSA	Input, analog supply ground	Ground for analog power supply
ADC_INx	Analog input signals	10 external analog input channels

Table 66. ADC internal input/output signals

Internal signal name	Signal type	Description
$V_{IN}[x]$	Analog input channels	Connected either to internal channels or to ADC_IN*i* external channels
TRGx	Input	ADC conversion triggers
V_{TS}	Input	Internal temperature sensor output voltage
V_{REFINT}	Input	Internal voltage reference output voltage
$V_{BAT/3}$	Input	VBAT pin input voltage divided by 3
ADC_AWDx_OUT	Output	Internal analog watchdog output signal connected to on-chip timers (x = Analog watchdog number = 1)

Table 67. External triggers

Name	Source	EXTSEL[2:0]
TRG0	TIM1_TRGO2	000
TRG1	TIM1_CC4	001
TRG2	TIM2_TRGO	010
TRG3	TIM2_CH4	011
TRG4	Reserved	100
TRG5	TIM2_CH3	101
TRG6	Reserved	110
TRG7	EXTI11	111

15.3.2 ADC voltage regulator (ADVREGEN)

The ADC has a specific internal voltage regulator which must be enabled and stable before using the ADC.

The ADC internal voltage regulator can be enabled by setting ADVREGEN bit to 1 in the ADC_CR register. The software must wait for the ADC voltage regulator startup time ($t_{ADCVREG_STUP}$) before launching a calibration or enabling the ADC. This delay must be managed by software (for details on $t_{ADCVREG_STUP}$, refer to the device datasheet).

After ADC operations are complete, the ADC is disabled (ADEN = 0). To keep power consumption low, it is important to disable the ADC voltage regulator before entering low-power mode (LPRun, LPSleep or Stop mode). Refer to *Section : ADC voltage regulator disable sequence*).

Note: When the internal voltage regulator is disabled, the internal analog calibration is kept.

Analog reference from the power control unit

The internal ADC voltage regulator internally uses an analog reference delivered by the power control unit through a buffer. This buffer is always enabled when the main voltage regulator of the power control unit operates in normal Run mode (refer to Reset and clock control and power control sections).

If the main voltage regulator enters low-power mode (such as Low-power run mode), this buffer is disabled and the ADC cannot be used.

ADC Voltage regulator enable sequence

To enable the ADC voltage regulator, set ADVREGEN bit to 1 in ADC_CR register.

ADC voltage regulator disable sequence

To disable the ADC voltage regulator, follow the sequence below:

1. Make sure that the ADC is disabled (ADEN = 0).
2. Clear ADVREGEN bit in ADC_CR register.

15.3.3 Calibration (ADCAL)

The ADC has a calibration feature. During the procedure, the ADC calculates a calibration factor which is internally applied to the ADC until the next ADC power-off. The application must not use the ADC during calibration and must wait until it is complete.

Calibration should be performed before starting A/D conversion. It removes the offset error which may vary from chip to chip due to process variation.

The calibration is initiated by software by setting bit ADCAL to 1. It can be initiated only when all the following conditions are met:

- the ADC voltage regulator is enabled (ADVREGEN = 1),
- the ADC is disabled (ADEN = 0), and
- the Auto-off mode is disabled (AUTOFF = 0).

ADCAL bit stays at 1 during all the calibration sequence. It is then cleared by hardware as soon the calibration completes. After this, the calibration factor can be read from the ADC_DR register (from bits 6 to 0).

The internal analog calibration is kept if the ADC is disabled (ADEN = 0). When the ADC operating conditions change (V_{DDA} changes are the main contributor to ADC offset variations and temperature change to a lesser extend), it is recommended to re-run a calibration cycle.

The calibration factor is lost in the following cases:

- The power supply is removed from the ADC (for example when the product enters Standby or VBAT mode)
- The ADC peripheral is reset.

The calibration factor is lost each time power is removed from the ADC (for example when the product enters Standby or VBAT mode). Still, it is possible to save and restore the calibration factor by software to save time when re-starting the ADC (as long as temperature and voltage are stable during the ADC power-down).

The calibration factor can be written if the ADC is enabled but not converting (ADEN = 1 and ADSTART = 0). Then, at the next start of conversion, the calibration factor is automatically injected into the analog ADC. This loading is transparent and does not add any cycle latency to the start of the conversion.

Software calibration procedure

1. Ensure that ADEN = 0, AUTOFF = 0, ADVREGEN = 1 and DMAEN = 0.
2. Set ADCAL = 1.
3. Wait until ADCAL = 0 (or until EOCAL = 1). This can be handled by interrupt if the interrupt is enabled by setting the EOCALIE bit in the ADC_IER register
4. The calibration factor can be read from bits 6:0 of ADC_DR or ADC_CALFACT registers.
5. To reduce the noise effect of the calibration factor extraction, the software can make average of eight CALFACT[6:0] values (optional).

Figure 32. ADC calibration

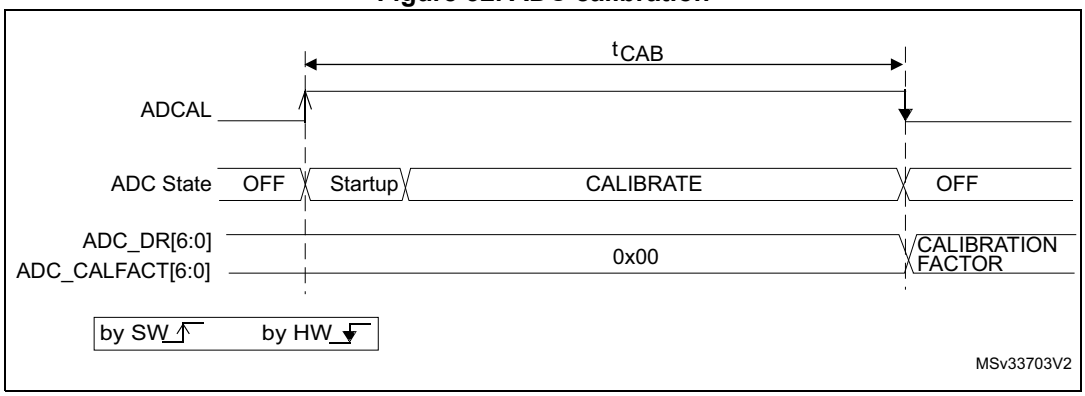

Calibration factor forcing software procedure

1. Ensure that ADEN = 1 and ADSTART = 0 (ADC started with no conversion ongoing)
2. Write ADC_CALFACT with the saved calibration factor
3. The calibration factor is used as soon as a new conversion is launched.

Figure 33. Calibration factor forcing

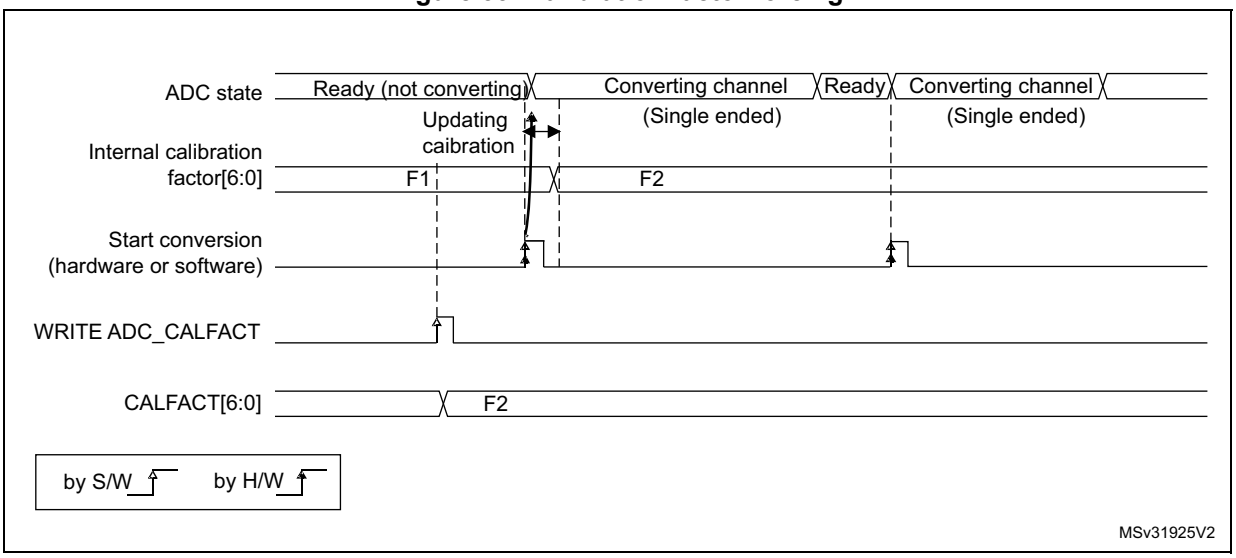

15.3.4 ADC on-off control (ADEN, ADDIS, ADRDY)

At power-up, the ADC is disabled and put in power-down mode (ADEN = 0).

As shown in *Figure 34*, the ADC needs a stabilization time of t_{STAB} before it starts converting accurately.

Two control bits are used to enable or disable the ADC:

- Set ADEN = 1 to enable the ADC. The ADRDY flag is set as soon as the ADC is ready for operation.
- Set ADDIS = 1 to disable the ADC and put the ADC in power down mode. The ADEN and ADDIS bits are then automatically cleared by hardware as soon as the ADC is fully disabled.

Conversion can then start either by setting ADSTART to 1 (refer to *Section 15.4: Conversion on external trigger and trigger polarity (EXTSEL, EXTEN)*) or when an external trigger event occurs if triggers are enabled.

Follow this procedure to enable the ADC:

1. Clear the ADRDY bit in ADC_ISR register by programming this bit to 1.
2. Set ADEN = 1 in the ADC_CR register.
3. Wait until ADRDY = 1 in the ADC_ISR register (ADRDY is set after the ADC startup time). This can be handled by interrupt if the interrupt is enabled by setting the ADRDYIE bit in the ADC_IER register.

Follow this procedure to disable the ADC:

1. Check that ADSTART = 0 in the ADC_CR register to ensure that no conversion is ongoing. If required, stop any ongoing conversion by writing 1 to the ADSTP bit in the ADC_CR register and waiting until this bit is read at 0.
2. Set ADDIS = 1 in the ADC_CR register.
3. If required by the application, wait until ADEN = 0 in the ADC_CR register, indicating that the ADC is fully disabled (ADDIS is automatically reset once ADEN = 0).
4. Clear the ADRDY bit in ADC_ISR register by programming this bit to 1 (optional).

Figure 34. Enabling/disabling the ADC

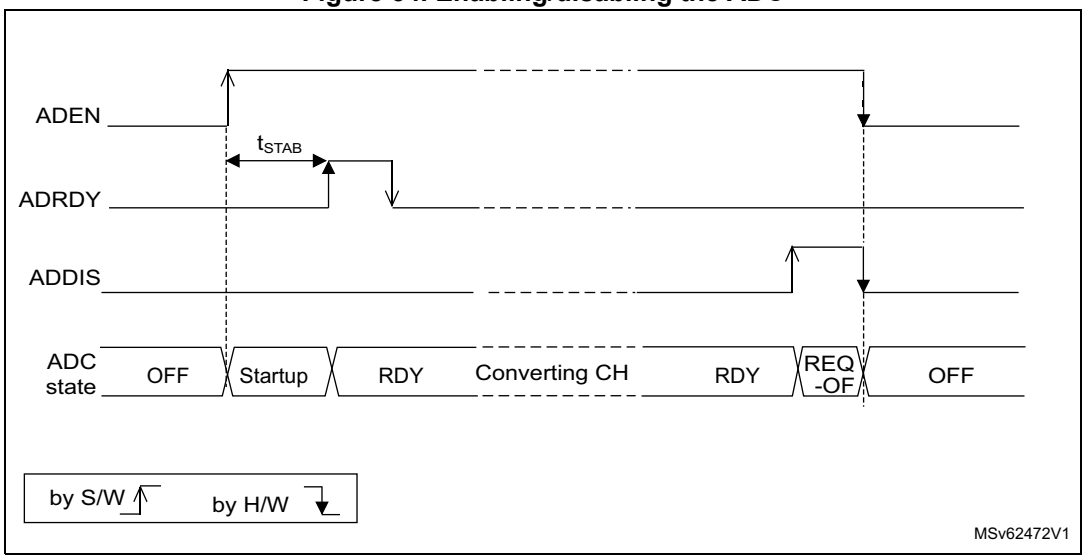

Note: In Auto-off mode (AUTOFF = 1) the power-on/off phases are performed automatically, by hardware and the ADRDY flag is not set.

When the bus clock is much faster than the analog ADC clock (f_{ADC}), a minimum delay of ten f_{ADC} clock cycles must be respected between ADEN and ADDIS bit settings.

15.3.5 ADC clock (CKMODE, PRESC[3:0])

The ADC has a dual clock-domain architecture, so that the ADC can be fed with a clock (ADC asynchronous clock) independent from the APB clock (PCLK).

Figure 35. ADC clock scheme

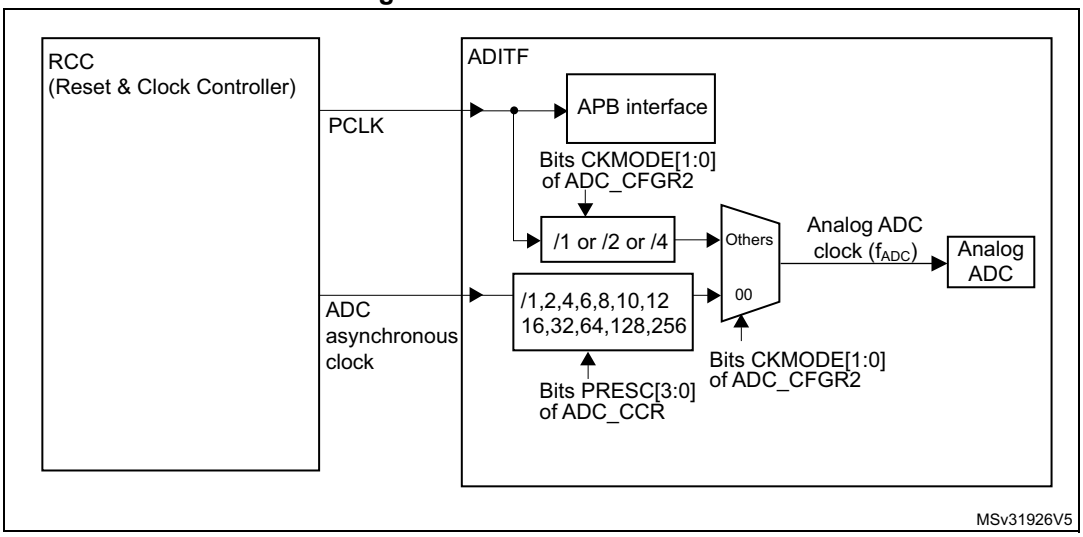

1. Refer to *Section Reset and clock control (RCC)* for how the PCLK clock and ADC asynchronous clock are enabled.

The input clock of the analog ADC can be selected between two different clock sources (see *Figure 35: ADC clock scheme* to see how the PCLK clock and the ADC asynchronous clock are enabled):

a) The ADC clock can be a specific clock source, named “ADC asynchronous clock“ which is independent and asynchronous with the APB clock.

Refer to RCC Section for more information on generating this clock source.

To select this scheme, bits CKMODE[1:0] of the ADC_CFGR2 register must be reset.

b) The ADC clock can be derived from the APB clock of the ADC bus interface, divided by a programmable factor (1, 2 or 4) according to bits CKMODE[1:0].

To select this scheme, bits CKMODE[1:0] of the ADC_CFGR2 register must be different from “00”.

In option a), the generated ADC clock can eventually be divided by a prescaler (1, 2, 4, 6, 8, 10, 12, 16, 32, 64, 128, 256) when programming the bits PRESC[3:0] in the ADC_CCR register).

Option a) has the advantage of reaching the maximum ADC clock frequency whatever the APB clock scheme selected.

Option b) has the advantage of bypassing the clock domain resynchronizations. This can be useful when the ADC is triggered by a timer and if the application requires that the ADC is

precisely triggered without any uncertainty (otherwise, an uncertainty of the trigger instant is added by the resynchronizations between the two clock domains).

Table 68. Latency between trigger and start of conversion(1)

ADC clock source	CKMODE[1:0]	Latency between the trigger event and the start of conversion
HSI16, SYSCLK, or PLLPCLK(2)	00	Latency is not deterministic (jitter)
PCLK divided by 2	01	Latency is deterministic (no jitter) and equal to 3.25 f_{ADC} cycles
PCLK divided by 4	10	Latency is deterministic (no jitter) and equal to 3.125 f_{ADC} cycles
PCLK divided by 1	11	Latency is deterministic (no jitter) and equal to 3 f_{ADC} cycles

1. Refer to the device datasheet for the maximum f_{ADC} frequency.
2. Selected with ADCSEL bitfield of the RCC_CCIPR register.

Caution: For correct operation of the ADC analog block, the analog ADC clock (f_{ADC}) must have a duty cycle ranging from 45% to 55%. This is granted when the incoming clock (PCLK or ADC asynchronous clock) is divided by a factor of two or higher, using one of the scaler blocks inside the ADC. If it is not the case, some additional rules must be followed:

- When CKMODE[1:0] = 11 (PCLK divided by one), the AHB and APB prescalers in the RCC must be configured in bypass mode.
- When the analog ADC clock is derived from the HSE or LSE bypass clock, this bypass clock must have a 45-to-55% duty cycle unless this clock is routed to the ADC through the PLL.

15.3.6 ADC connectivity

ADC inputs are connected to the external channels as well as internal sources as described in *Figure 36*.

Figure 36. ADC connectivity

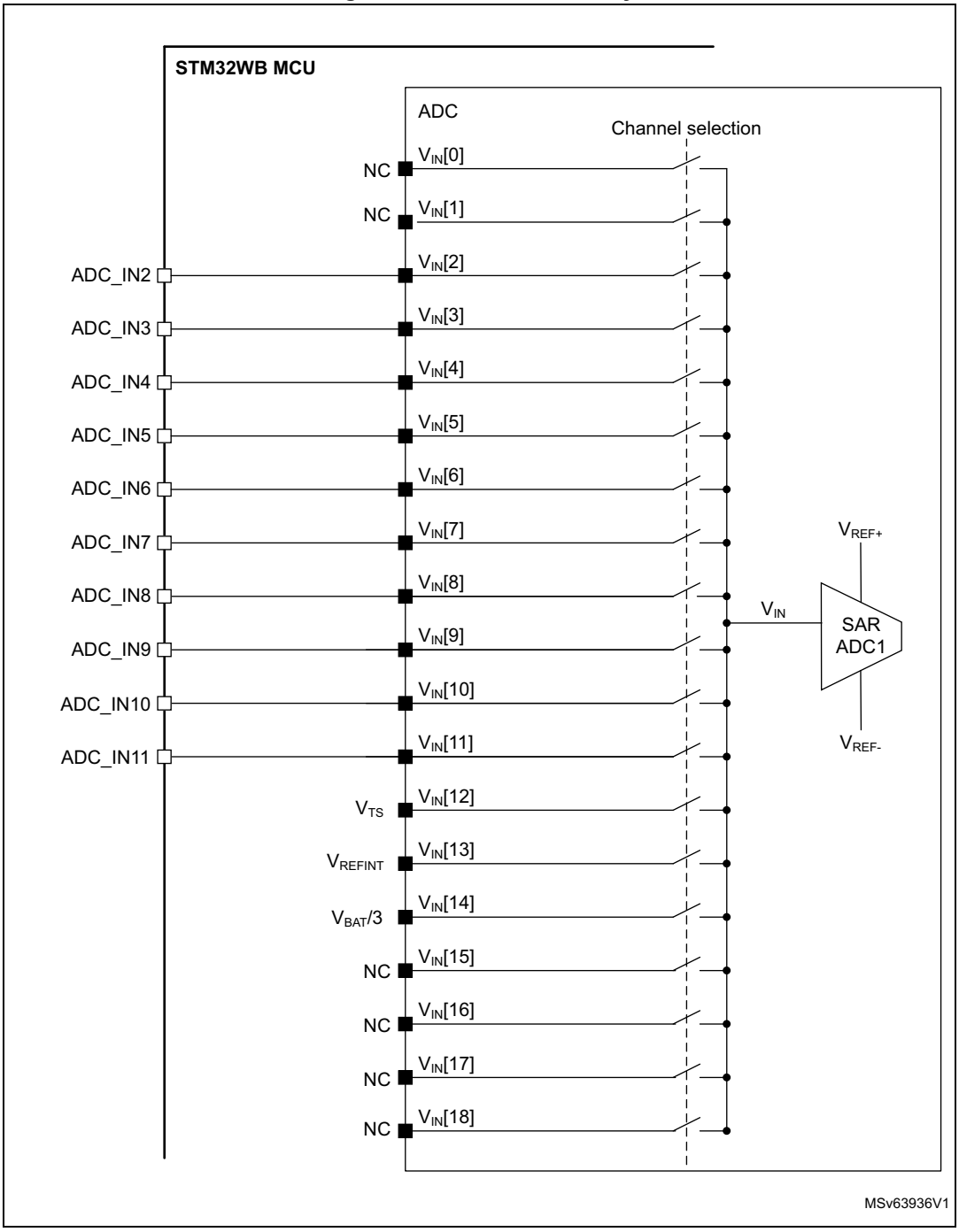

15.3.7 Configuring the ADC

The software must write the ADCAL and ADEN bits in the ADC_CR register and configure the ADC_CFGR1 and ADC_CFGR2 registers only when the ADC is disabled (ADEN must be cleared).

The software must only write to the ADSTART and ADDIS bits in the ADC_CR register only if the ADC is enabled and there is no pending request to disable the ADC (ADEN = 1 and ADDIS = 0).

For all the other control bits in the ADC_IER, ADC_SMPR, ADC_TR, ADC_CHSELR and ADC_CCR registers, refer to the description of the corresponding control bit in *Section 15.11: ADC registers*.

The software must only write to the ADSTP bit in the ADC_CR register if the ADC is enabled (and possibly converting) and there is no pending request to disable the ADC (ADSTART = 1 and ADDIS = 0).

Note: There is no hardware protection preventing software from making write operations forbidden by the above rules. If such a forbidden write access occurs, the ADC may enter an undefined state. To recover correct operation in this case, the ADC must be disabled (clear ADEN = 0 and all the bits in the ADC_CR register).

15.3.8 Channel selection (CHSEL, SCANDIR, CHSELRMOD)

There are up to 19 multiplexed channels:

- 10 analog inputs from GPIO pins (ADC_INx)
- 3 internal analog inputs (temperature sensor, internal reference voltage, V_{BAT} channel)

It is possible to convert a single channel or a sequence of channels.

The sequence of the channels to be converted can be programmed in the ADC_CHSELR channel selection register: each analog input channel has a dedicated selection bit (CHSELx).

The ADC scan sequencer can be used in two different modes:

- Sequencer not fully configurable:

  The order in which the channels are scanned is defined by the channel number (CHSELRMOD bit must be cleared in ADC_CFGR1 register):
  - Sequence length configured through CHSELx bits in ADC_CHSELR register
  - Sequence direction: the channels are scanned in a forward direction (from the lowest to the highest channel number) or backward direction (from the highest to the lowest channel number) depending on the value of SCANDIR bit (SCANDIR = 0: forward scan, SCANDIR = 1: backward scan)

  - Any channel can belong to in these sequences
- Sequencer fully configurable

  The CHSELRMOD bit is set in ADC_CFGR1 register.
  - Sequencer length is up to 8 channels
  - The order in which the channels are scanned is independent from the channel number. Any order can be configured through SQ1[3:0] to SQ8[3:0] bits in ADC_CHSELR register.
  - Only channel 0 to channel 14 can be selected in this sequence
  - If the sequencer detects SQx[3:0] = 0b1111, the following SQx[3:0] registers are ignored.
  - If no 0b1111 is programmed in SQx[3:0], the sequencer scans full eight channels.

After programming ADC CHSELR, SCANDIR and CHSELRMOD bits, it is mandatory to wait for CCRDY flag before starting conversions. It indicates that the new channel setting has been applied. If a new configuration is required, the CCRDY flag must be cleared prior to starting the conversion.

The software is allowed to program the CHSEL, SCANDIR, CHSELRMOD bits only when ADSTART bit is cleared (which ensures that no conversion is ongoing).

Temperature sensor, V_{REFINT} and V_{BAT} internal channels

The temperature sensor is connected to channel ADC V_{IN}[12].

The internal voltage reference V_{REFINT} is connected to channel ADC V_{IN}[13].

V_{BAT} channel is connected to ADC V_{IN}[14] channel.

When V_{REF+} is lower than V_{DDA}, this channel is not converted.

15.3.9 Programmable sampling time (SMPx[2:0])

Before starting a conversion, the ADC needs to establish a direct connection between the voltage source to be measured and the embedded sampling capacitor of the ADC. This sampling time must be enough for the input voltage source to charge the sample and hold capacitor to the input voltage level.

Having a programmable sampling time allows the conversion speed to be trimmed according to the input resistance of the input voltage source.

The ADC samples the input voltage for a number of ADC clock cycles that can be modified using the SMP1[2:0] and SMP2[2:0] bits in the ADC_SMPR register.

Each channel can choose one out of two sampling times configured in SMP1[2:0] and SMP2[2:0] bitfields, through SMPSELx bits in ADC_SMPR register.

The total conversion time is calculated as follows:

t_{CONV} = Sampling time + 12.5 x ADC clock cycles

Example:

With f_{ADC} = 16 MHz and a sampling time of 1.5 ADC clock cycles:

t_{CONV} = 1.5 + 12.5 = 14 ADC clock cycles = 0.875 µs

The ADC indicates the end of the sampling phase by setting the EOSMP flag.

15.3.10 Single conversion mode (CONT = 0)

In Single conversion mode, the ADC performs a single sequence of conversions, converting all the channels once. This mode is selected when CONT = 0 in the ADC_CFGR1 register. Conversion is started by either:

- Setting the ADSTART bit in the ADC_CR register
- Hardware trigger event

Inside the sequence, after each conversion is complete:

- The converted data are stored in the 16-bit ADC_DR register
- The EOC (end of conversion) flag is set
- An interrupt is generated if the EOCIE bit is set

After the sequence of conversions is complete:

- The EOS (end of sequence) flag is set
- An interrupt is generated if the EOSIE bit is set

Then the ADC stops until a new external trigger event occurs or the ADSTART bit is set again.

Note: To convert a single channel, program a sequence with a length of 1.

15.3.11 Continuous conversion mode (CONT = 1)

In continuous conversion mode, when a software or hardware trigger event occurs, the ADC performs a sequence of conversions, converting all the channels once and then automatically re-starts and continuously performs the same sequence of conversions. This mode is selected when CONT = 1 in the ADC_CFGR1 register. Conversion is started by either:

- Setting the ADSTART bit in the ADC_CR register
- Hardware trigger event

Inside the sequence, after each conversion is complete:

- The converted data are stored in the 16-bit ADC_DR register
- The EOC (end of conversion) flag is set
- An interrupt is generated if the EOCIE bit is set

After the sequence of conversions is complete:

- The EOS (end of sequence) flag is set
- An interrupt is generated if the EOSIE bit is set

Then, a new sequence restarts immediately and the ADC continuously repeats the conversion sequence.

Note: To convert a single channel, program a sequence with a length of 1.

It is not possible to have both discontinuous mode and continuous mode enabled: it is forbidden to set both bits DISCEN = 1 and CONT = 1.

15.3.12 Starting conversions (ADSTART)

Software starts ADC conversions by setting ADSTART = 1.

When ADSTART is set, the conversion:

- Starts immediately if EXTEN = 00 (software trigger)
- At the next active edge of the selected hardware trigger if EXTEN ≠ 00

The ADSTART bit is also used to indicate whether an ADC operation is currently ongoing. It is possible to re-configure the ADC while ADSTART = 0, indicating that the ADC is idle.

The ADSTART bit is cleared by hardware:

- In single mode with software trigger (CONT = 0, EXTEN = 00)
  - At any end of conversion sequence (EOS = 1)
- In discontinuous mode with software trigger (CONT = 0, DISCEN = 1, EXTEN = 00)
  - At end of conversion (EOC = 1)
- In all cases (CONT = x, EXTEN = XX)
  - After execution of the ADSTP procedure invoked by software (see *Section 15.3.14: Stopping an ongoing conversion (ADSTP) on page 370*)

Note: In continuous mode (CONT = 1), the ADSTART bit is not cleared by hardware when the EOS flag is set because the sequence is automatically relaunched.

When hardware trigger is selected in single mode (CONT = 0 and EXTEN = 01), ADSTART is not cleared by hardware when the EOS flag is set (except if DMAEN = 1 and DMACFG = 0 in which case ADSTART is cleared at end of the DMA transfer). This avoids the need for software having to set the ADSTART bit again and ensures the next trigger event is not missed.

After changing channel selection configuration (by programming ADC_CHSELR register or changing CHSELRMOD or SCANDIR), it is mandatory to wait until CCRDY flag is asserted before asserting ADSTART, otherwise the value written to ADSTART is ignored.

15.3.13 Timings

The elapsed time between the start of a conversion and the end of conversion is the sum of the configured sampling time plus the successive approximation time depending on data resolution:

$$t_{CONV} = t_{SMPL} + t_{SAR} = [1.5\ _{|min} + 12.5\ _{|12bit}] \times 1/f_{ADC}$$

$$t_{CONV} = t_{SMPL} + t_{SAR} = 42.9\ ns\ _{|min} + 357.1\ ns\ _{|12bit} = 0.400\ \mu s\ _{|min}\ (for\ f_{ADC} = 35\ MHz)$$

Figure 37. Analog-to-digital conversion time

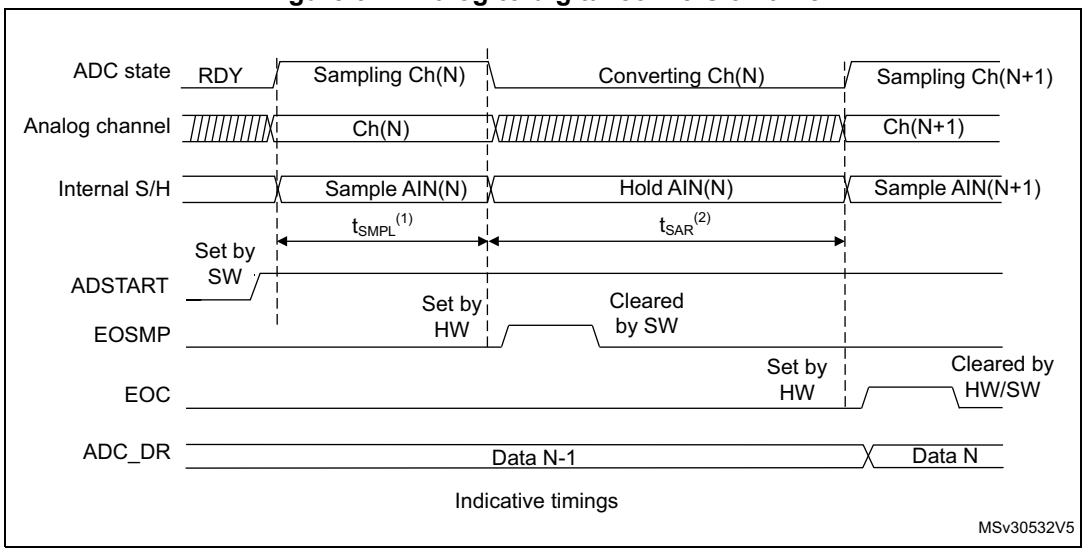

1. t_{SMPL} depends on SMP[2:0].
2. t_{SAR} depends on RES[2:0].
3. The synchronization between the analog clock and the digital clock domains is not described in the above figure.

Figure 38. ADC conversion timings

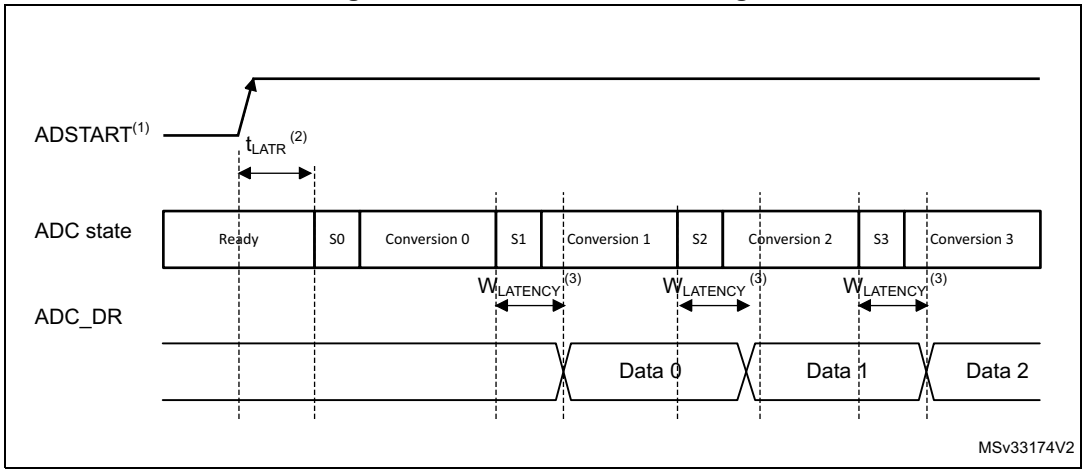

1. EXTEN = 00 or EXTEN ≠ 00.
2. Trigger latency (refer to datasheet for more details).
3. ADC_DR register write latency (refer to datasheet for more details).

15.3.14 Stopping an ongoing conversion (ADSTP)

The software can decide to stop any ongoing conversions by setting ADSTP = 1 in the ADC_CR register.

This resets the ADC operation and the ADC is idle, ready for a new operation.

When the ADSTP bit is set by software, any ongoing conversion is aborted and the result is discarded (ADC_DR register is not updated with the current conversion).

The scan sequence is also aborted and reset (meaning that restarting the ADC would re-start a new sequence).

Once this procedure is complete, the ADSTP and ADSTART bits are both cleared by hardware and the software must wait until ADSTART=0 before starting new conversions.

Figure 39. Stopping an ongoing conversion

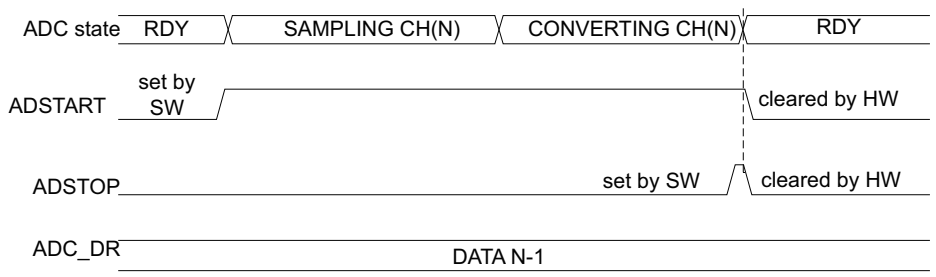

15.4 Conversion on external trigger and trigger polarity (EXTSEL, EXTEN)

A conversion or a sequence of conversion can be triggered either by software or by an external event (for example timer capture). If the EXTEN[1:0] control bits are not equal to “0b00”, then external events are able to trigger a conversion with the selected polarity. The trigger selection is effective once software has set bit ADSTART = 1.

Any hardware triggers which occur while a conversion is ongoing are ignored.

If bit ADSTART = 0, any hardware triggers which occur are ignored.

Table 69 provides the correspondence between the EXTEN[1:0] values and the trigger polarity.

Table 69. Configuring the trigger polarity

Source	EXTEN[1:0]
Trigger detection disabled	00
Detection on rising edge	01
Detection on falling edge	10
Detection on both rising and falling edges	11

Note: The polarity of the external trigger can be changed only when the ADC is not converting (ADSTART = 0).

The EXTSEL[2:0] control bits are used to select which of 8 possible events can trigger conversions.

Refer to *Table 67: External triggers* in *Section 15.3.1: ADC pins and internal signals* for the list of all the external triggers that can be used for regular conversion.

The software source trigger events can be generated by setting the ADSTART bit in the ADC_CR register.

Note: The trigger selection can be changed only when the ADC is not converting (ADSTART = 0).

15.4.1 Discontinuous mode (DISCEN)

This mode is enabled by setting the DISCEN bit in the ADC_CFGR1 register.

In this mode (DISCEN = 1), a hardware or software trigger event is required to start each conversion defined in the sequence. On the contrary, if DISCEN = 0, a single hardware or software trigger event successively starts all the conversions defined in the sequence.

Example:

- DISCEN = 1, channels to be converted = 0, 3, 7, 10
  - 1st trigger: channel 0 is converted and an EOC event is generated
  - 2nd trigger: channel 3 is converted and an EOC event is generated
  - 3rd trigger: channel 7 is converted and an EOC event is generated
  - 4th trigger: channel 10 is converted and both EOC and EOS events are generated.
  - 5th trigger: channel 0 is converted an EOC event is generated
  - 6th trigger: channel 3 is converted and an EOC event is generated
  - ...
- DISCEN = 0, channels to be converted = 0, 3, 7, 10
  - 1st trigger: the complete sequence is converted: channel 0, then 3, 7 and 10. Each conversion generates an EOC event and the last one also generates an EOS event.
  - Any subsequent trigger events restarts the complete sequence.

Note: It is not possible to have both discontinuous mode and continuous mode enabled: it is forbidden to set both bits DISCEN = 1 and CONT = 1.

15.4.2 Programmable resolution (RES) - Fast conversion mode

It is possible to obtain faster conversion times (t_{SAR}) by reducing the ADC resolution.

The resolution can be configured to be either 12, 10, 8, or 6 bits by programming the RES[1:0] bits in the ADC_CFGR1 register. Lower resolution allows faster conversion times for applications where high data precision is not required.

Note: The RES[1:0] bit must only be changed when the ADEN bit is reset.

The result of the conversion is always 12 bits wide and any unused LSB bits are read as zeros.

Lower resolution reduces the conversion time needed for the successive approximation steps as shown in *Table 70*.

Table 70. t_{SAR} timings depending on resolution

RES[1:0] (bits)	t_{SAR} (f_{ADC} cycles)	t_{SAR} at f_{ADC} = 35 MHz (ns)	$t_{SMPL(min)}$ (f_{ADC} cycles)	t_{CONV} with min. t_{SMPL} (f_{ADC} cycles)	$t_{CONV(min)}$ at f_{ADC} = 35 MHz (ns)
12	12.5	357	1.5	14	400
10	10.5	300	1.5	12	343
8	8.5	243	1.5	10	286
6	6.5	186	1.5	8	229

15.4.3 End of conversion, end of sampling phase (EOC, EOSMP flags)

The ADC indicates each end of conversion (EOC) event.

The ADC sets the EOC flag in the ADC_ISR register as soon as a new conversion data result is available in the ADC_DR register. An interrupt can be generated if the EOCIE bit is set in the ADC_IER register. The EOC flag is cleared by software either by writing 1 to it, or by reading the ADC_DR register.

The ADC also indicates the end of sampling phase by setting the EOSMP flag in the ADC_ISR register. The EOSMP flag is cleared by software by writing1 to it. An interrupt can be generated if the EOSMPIE bit is set in the ADC_IER register.

The aim of this interrupt is to allow the processing to be synchronized with the conversions. Typically, an analog multiplexer can be accessed in hidden time during the conversion phase, so that the multiplexer is positioned when the next sampling starts.

Note: As there is only a very short time left between the end of the sampling and the end of the conversion, it is recommenced to use polling or a WFE instruction rather than an interrupt and a WFI instruction.

15.4.4 End of conversion sequence (EOS flag)

The ADC notifies the application of each end of sequence (EOS) event.

The ADC sets the EOS flag in the ADC_ISR register as soon as the last data result of a conversion sequence is available in the ADC_DR register. An interrupt can be generated if the EOSIE bit is set in the ADC_IER register. The EOS flag is cleared by software by writing 1 to it.

15.4.5 Example timing diagrams (single/continuous modes hardware/software triggers)

Figure 40. Single conversions of a sequence, software trigger

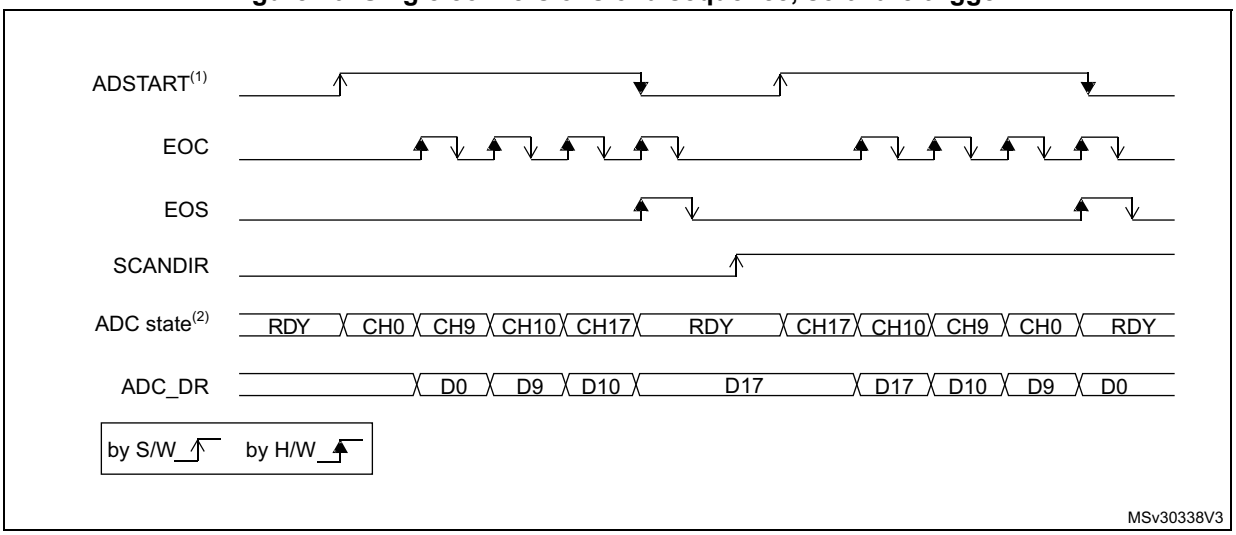

1. EXTEN = 00, CONT = 0
2. CHSEL = 0x20601, WAIT = 0, AUTOFF = 0

Figure 41. Continuous conversion of a sequence, software trigger

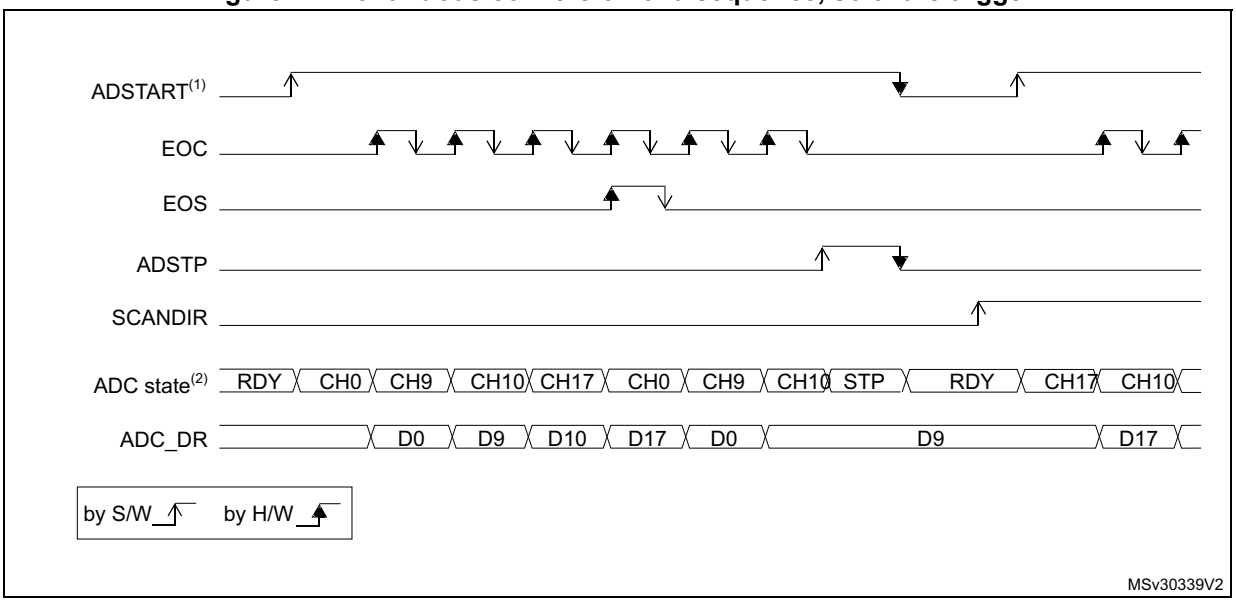

1. EXTEN = 00, CONT = 1,
2. CHSEL = 0x20601, WAIT = 0, AUTOFF = 0

Figure 42. Single conversions of a sequence, hardware trigger

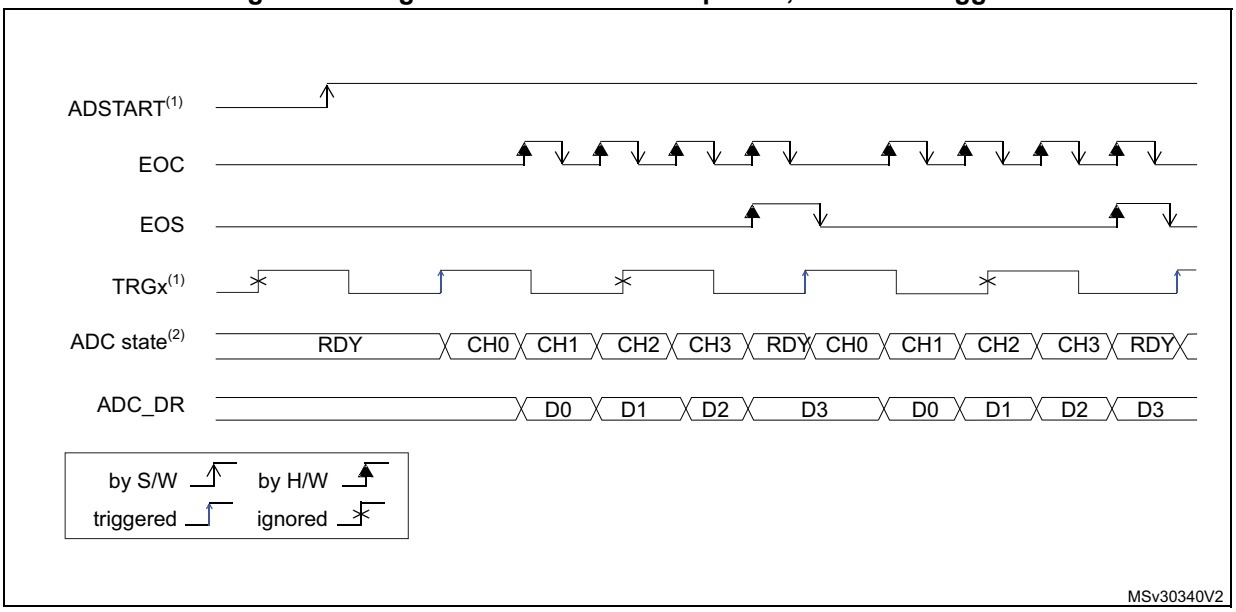

1. EXTSEL = TRGx (over-frequency), EXTEN = 01 (rising edge), CONT = 0
2. CHSEL = 0xF, SCANDIR = 0, WAIT = 0, AUTOFF = 0

Figure 43. Continuous conversions of a sequence, hardware trigger

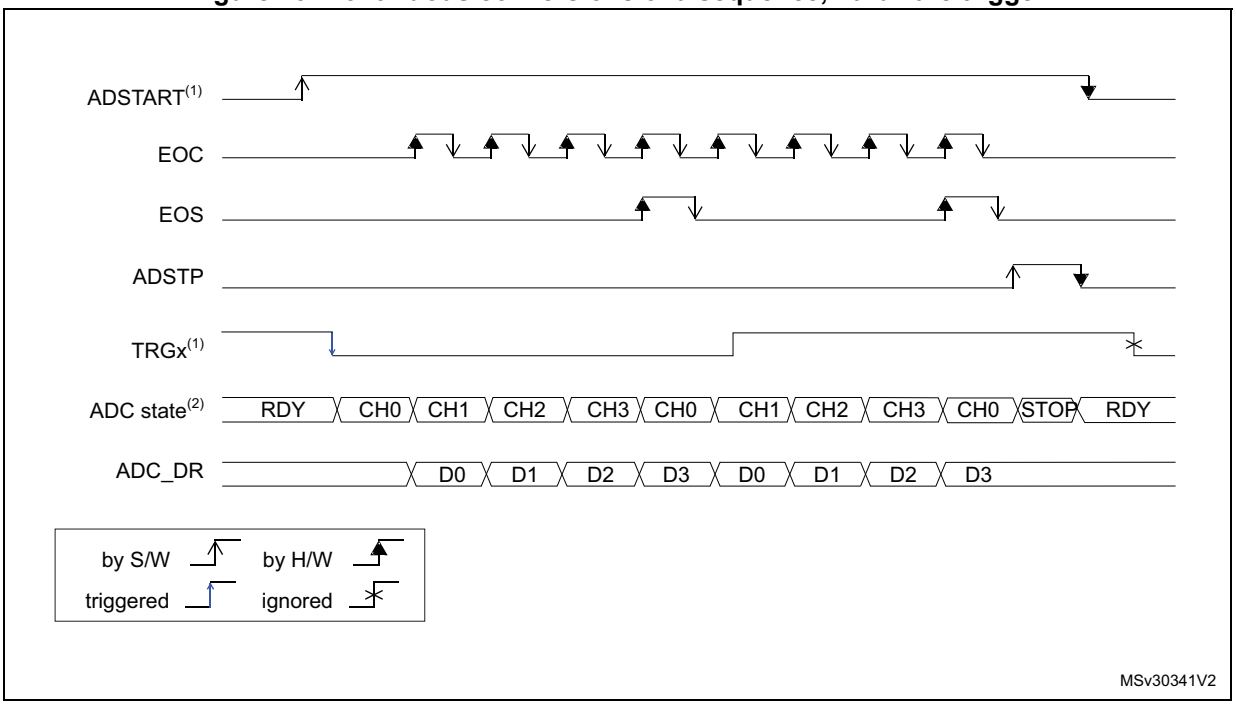

1. EXTSEL = TRGx, EXTEN = 10 (falling edge), CONT = 1
2. CHSEL = 0xF, SCANDIR = 0, WAIT = 0, AUTOFF = 0

15.4.6 Low frequency trigger mode

Once the ADC is enabled or the last ADC conversion is complete, the ADC is ready to start a new conversion. The ADC needs to be started at a predefined time (t_{idle}) otherwise ADC converted data might be corrupted due to the transistor leakage (refer to the device datasheet for the maximum value of t_{idle}).

If the application has to support a time longer than the maximum t_{idle} value (between one trigger to another for single conversion mode or between the ADC enable and the first ADC conversion), then the ADC internal state needs to be rearmed. This mechanism can be enabled by setting LFTRIG bit to 1 in ADC_CFGR2 register. By setting this bit, any trigger (software or hardware) sends a rearm command to ADC. The conversion starts after a one ADC clock cycle delay compared to LFTRIG cleared.

It is not necessary to use this mode when AUTOFF bit is set. For Wait mode, only the first trigger generates an internal rearm command.

15.5 Data management

15.5.1 Data register and data alignment (ADC_DR, ALIGN)

At the end of each conversion (when an EOC event occurs), the result of the converted data is stored in the ADC_DR data register which is 16-bit wide.

The format of the ADC_DR depends on the configured data alignment and resolution.

The ALIGN bit in the ADC_CFGR1 register selects the alignment of the data stored after conversion. Data can be right-aligned (ALIGN = 0) or left-aligned (ALIGN = 1) as shown in *Figure 44*.

Figure 44. Data alignment and resolution

ALIGN	RES	15	14	13	12	11	10	9	8	7	6	5	4	3	2	1	0
0	0x0	0x0				DR[11:0]											
	0x1	0x00						DR[9:0]									
	0x2	0x00								DR[7:0]							
	0x3	0x00										DR[5:0]					
1	0x0	DR[11:0]												0x0			
	0x1	DR[9:0]										0x00					
	0x2	DR[7:0]								0x00							
	0x3	0x00								DR[5:0]						0x0	

MS30342V1

15.5.2 ADC overrun (OVR, OVRMOD)

The overrun flag (OVR) indicates a data overrun event, when the converted data was not read in time by the CPU or the DMA, before the data from a new conversion is available.

The OVR flag is set in the ADC_ISR register if the EOC flag is still at ‘1’ at the time when a new conversion completes. An interrupt can be generated if the OVRIE bit is set in the ADC_IER register.

When an overrun condition occurs, the ADC keeps operating and can continue to convert unless the software decides to stop and reset the sequence by setting the ADSTP bit in the ADC_CR register.

The OVR flag is cleared by software by writing 1 to it.

It is possible to configure if the data is preserved or overwritten when an overrun event occurs by programming the OVRMOD bit in the ADC_CFGR1 register:

- OVRMOD = 0
  - An overrun event preserves the data register from being overwritten: the old data is maintained and the new conversion is discarded. If OVR remains at 1, further conversions can be performed but the resulting data is discarded.
- OVRMOD = 1
  - The data register is overwritten with the last conversion result and the previous unread data is lost. If OVR remains at 1, further conversions can be performed and the ADC_DR register always contains the data from the latest conversion.

Figure 45. Example of overrun (OVR)

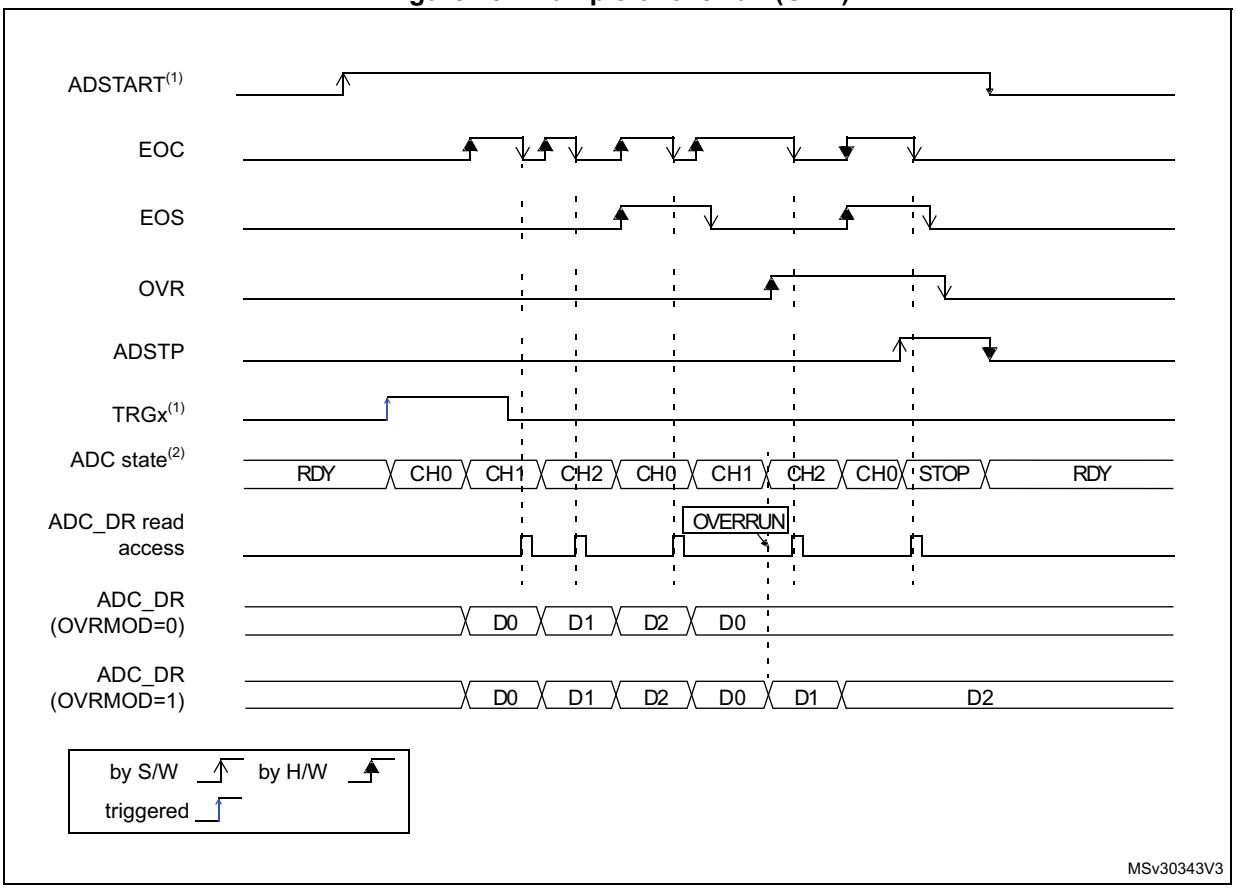

15.5.3 Managing a sequence of data converted without using the DMA

If the conversions are slow enough, the conversion sequence can be handled by software. In this case the software must use the EOC flag and its associated interrupt to handle each data result. Each time a conversion is complete, the EOC bit is set in the ADC_ISR register and the ADC_DR register can be read. The OVRMOD bit in the ADC_CFGR1 register should be configured to 0 to manage overrun events as an error.

15.5.4 Managing converted data without using the DMA without overrun

It may be useful to let the ADC convert one or more channels without reading the data after each conversion. In this case, the OVRMOD bit must be configured at 1 and the OVR flag should be ignored by the software. When OVRMOD = 1, an overrun event does not prevent the ADC from continuing to convert and the ADC_DR register always contains the latest conversion data.

15.5.5 Managing converted data using the DMA

Since all converted channel values are stored in a single data register, it is efficient to use DMA when converting more than one channel. This avoids losing the conversion data results stored in the ADC_DR register.

When DMA mode is enabled (DMAEN bit set in the ADC_CFGR1 register), a DMA request is generated after the conversion of each channel. This allows the transfer of the converted data from the ADC_DR register to the destination location selected by the software.

Note: The DMAEN bit in the ADC_CFGR1 register must be set after the ADC calibration phase.

Despite this, if an overrun occurs (OVR = 1) because the DMA could not serve the DMA transfer request in time, the ADC stops generating DMA requests and the data corresponding to the new conversion is not transferred by the DMA. Which means that all the data transferred to the RAM can be considered as valid.

Depending on the configuration of OVRMOD bit, the data is either preserved or overwritten (refer to *Section 15.5.2: ADC overrun (OVR, OVRMOD) on page 375*).

The DMA transfer requests are blocked until the software clears the OVR bit.

Two different DMA modes are proposed depending on the application use and are configured with bit DMACFG in the ADC_CFGR1 register:

- DMA one shot mode (DMACFG = 0).
  This mode should be selected when the DMA is programmed to transfer a fixed number of data words.
- DMA circular mode (DMACFG = 1)
  This mode should be selected when programming the DMA in circular mode or double buffer mode.

DMA one shot mode (DMACFG = 0)

In this mode, the ADC generates a DMA transfer request each time a new conversion data word is available and stops generating DMA requests once the DMA has reached the last DMA transfer (when a transfer complete interrupt occurs, see *Section 11: Direct memory access controller (DMA) on page 292*) even if a conversion has been started again.

When the DMA transfer is complete (all the transfers configured in the DMA controller have been done):

- The content of the ADC data register is frozen.
- Any ongoing conversion is aborted and its partial result discarded
- No new DMA request is issued to the DMA controller. This avoids generating an overrun error if there are still conversions which are started.
- The scan sequence is stopped and reset
- The DMA is stopped

DMA circular mode (DMACFG = 1)

In this mode, the ADC generates a DMA transfer request each time a new conversion data word is available in the data register, even if the DMA has reached the last DMA transfer. This allows the DMA to be configured in circular mode to handle a continuous analog input data stream.

15.6 Low-power features

15.6.1 Wait mode conversion

Wait mode conversion can be used to simplify the software as well as optimizing the performance of applications clocked at low frequency where there might be a risk of ADC overrun occurring.

When the WAIT bit is set in the ADC_CFGR1 register, a new conversion can start only if the previous data has been treated, once the ADC_DR register has been read or if the EOC bit has been cleared.

This is a way to automatically adapt the speed of the ADC to the speed of the system that reads the data.

Note: Any hardware triggers which occur while a conversion is ongoing or during the wait time preceding the read access are ignored.

Figure 46. Wait mode conversion (continuous mode, software trigger)

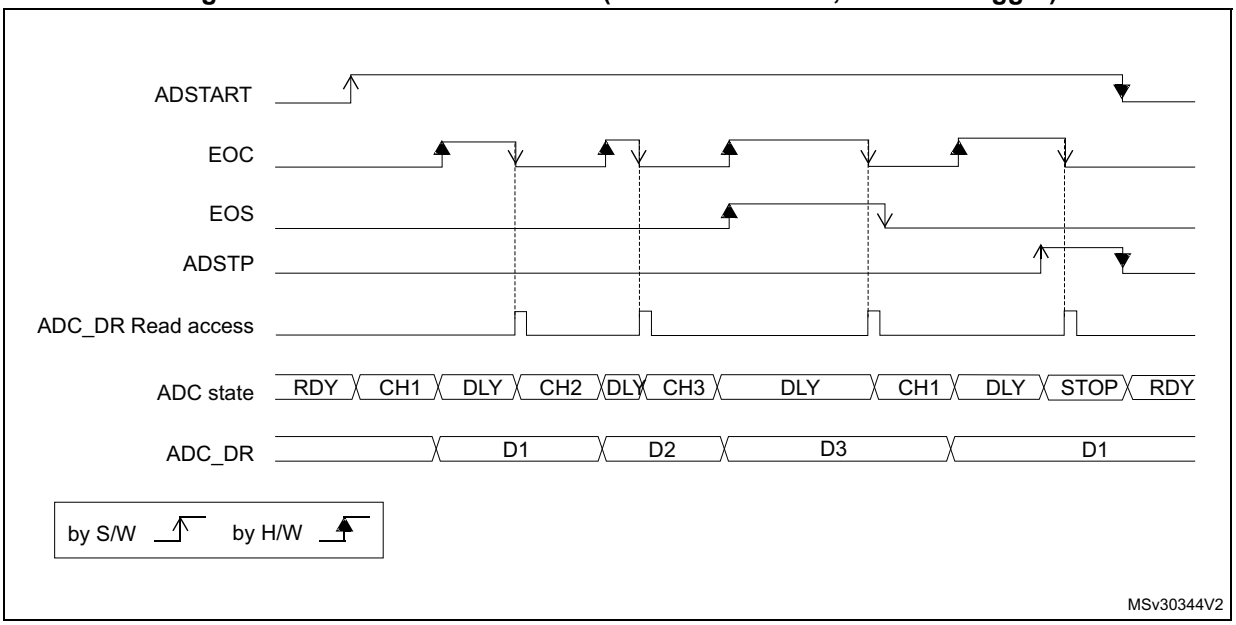

1. EXTEN = 00, CONT = 1
2. CHSEL = 0x3, SCANDIR = 0, WAIT = 1, AUTOFF = 0

15.6.2 Auto-off mode (AUTOFF)

The ADC has an automatic power management feature which is called auto-off mode, and is enabled by setting AUTOFF = 1 in the ADC_CFGR1 register.

When AUTOFF = 1, the ADC is always powered off when not converting and automatically wakes-up when a conversion is started (by software or hardware trigger). A startup-time is automatically inserted between the trigger event which starts the conversion and the sampling time of the ADC. The ADC is then automatically disabled once the sequence of conversions is complete.

Auto-off mode can cause a dramatic reduction in the power consumption of applications which need relatively few conversions or when conversion requests are timed far enough apart (for example with a low frequency hardware trigger) to justify the extra power and extra time used for switching the ADC on and off.

Auto-off mode can be combined with the wait mode conversion (WAIT = 1) for applications clocked at low frequency. This combination can provide significant power savings if the ADC is automatically powered-off during the wait phase and restarted as soon as the ADC_DR register is read by the application (see *Figure 48: Behavior with WAIT = 1, AUTOFF = 1*).

Note: Refer to the Section Reset and clock control (RCC) for the description of how to manage the dedicated 14 MHz internal oscillator. The ADC interface can automatically switch ON/OFF the 14 MHz internal oscillator to save power.

Figure 47. Behavior with WAIT = 0, AUTOFF = 1

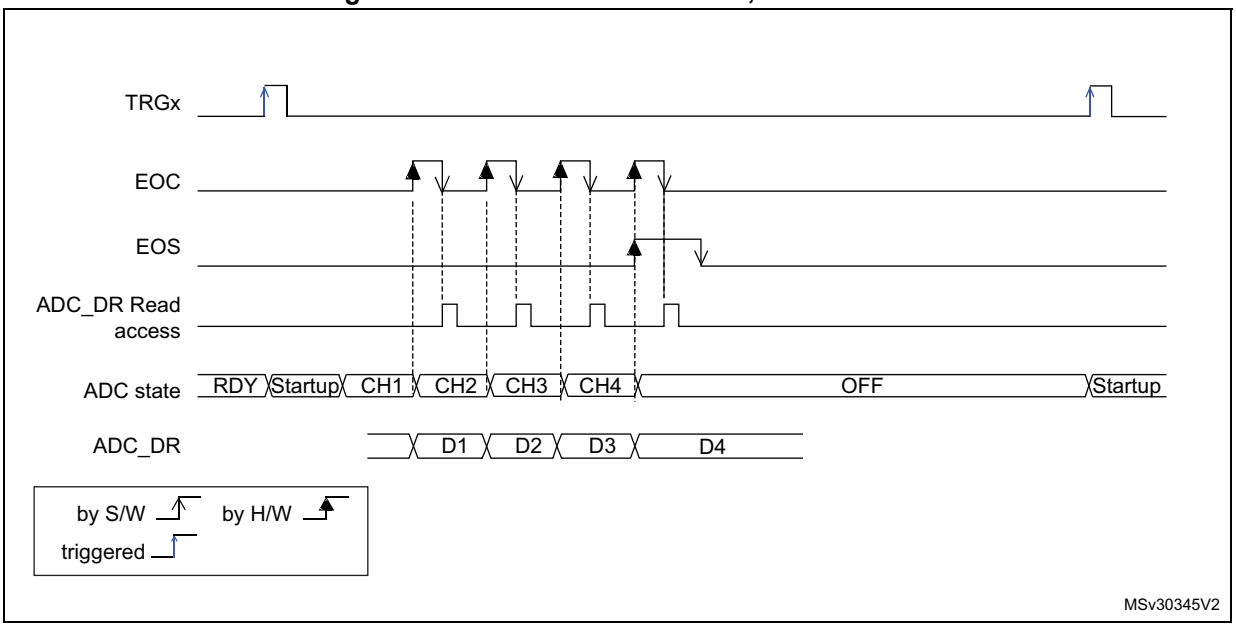

1. EXTSEL = TRGx, EXTEN = 01 (rising edge), CONT = x, ADSTART = 1, CHSEL = 0xF, SCANDIR = 0, WAIT = 1, AUTOFF = 1

Figure 48. Behavior with WAIT = 1, AUTOFF = 1

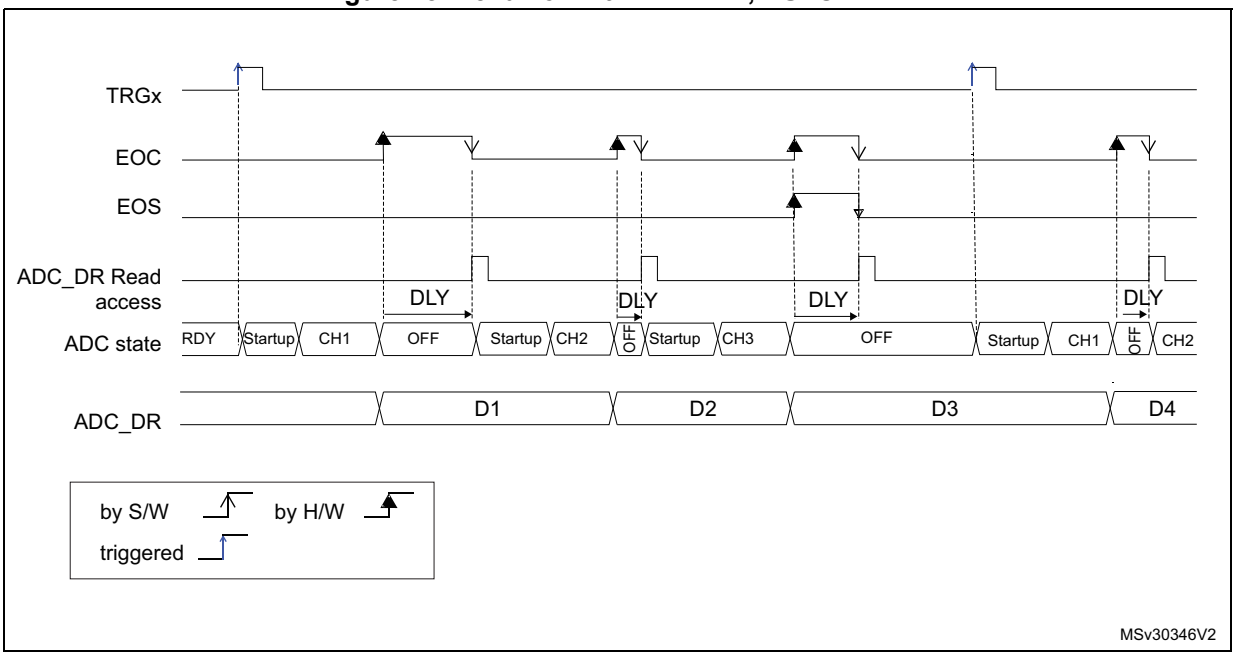

1. EXTSEL = TRGx, EXTEN = 01 (rising edge), CONT = x, ADSTART = 1, CHSEL = 0xF, SCANDIR = 0, WAIT = 1, AUTOFF = 1

15.7 Analog window watchdog

15.7.1 Description of the analog watchdog

The AWD analog watchdog is enabled by setting the AWDEN bit in the ADC_CFGR1 register. It is used to monitor that either one selected channel or all enabled channels (see *Table 72: Analog watchdog channel selection*) remain within a configured voltage range (window) as shown in *Figure 49*.

The AWD analog watchdog status bit is set if the analog voltage converted by the ADC is below a lower threshold or above a higher threshold. These thresholds are programmed in HT[11:0] and LT[11:0] bit of ADC_TR register. An interrupt can be enabled by setting the AWDIE bit in the ADC_IER register.

The AWD flag is cleared by software by programming it to it.

When converting data with a resolution of less than 12-bit (according to bits RES[1:0]), the LSB of the programmed thresholds must be kept cleared because the internal comparison is always performed on the full 12-bit raw converted data (left aligned).

Table 71 describes how the comparison is performed for all the possible resolutions.

Table 71. Analog watchdog comparison

Resolution bits RES[1:0]	Analog watchdog comparison between:		Comments
	Raw converted data, left aligned(1)	Thresholds	
00: 12-bit	DATA[11:0]	LT[11:0] and HT[11:0]	-
01: 10-bit	DATA[11:2],00	LT[11:0] and HT[11:0]	The user must configure LT1[1:0] and HT1[1:0] to “00”
10: 8-bit	DATA[11:4],0000	LT[11:0] and HT[11:0]	The user must configure LT1[3:0] and HT1[3:0] to “0000”
11: 6-bit	DATA[11:6],000000	LT[11:0] and HT[11:0]	The user must configure LT1[5:0] and HT1[5:0] to “000000”

1. The watchdog comparison is performed on the raw converted data before any alignment calculation.

Table 72 shows how to configure the AWDSGL and AWDEN bits in the ADC_CFGR1 register to enable the analog watchdog on one or more channels.

Figure 49. Analog watchdog guarded area

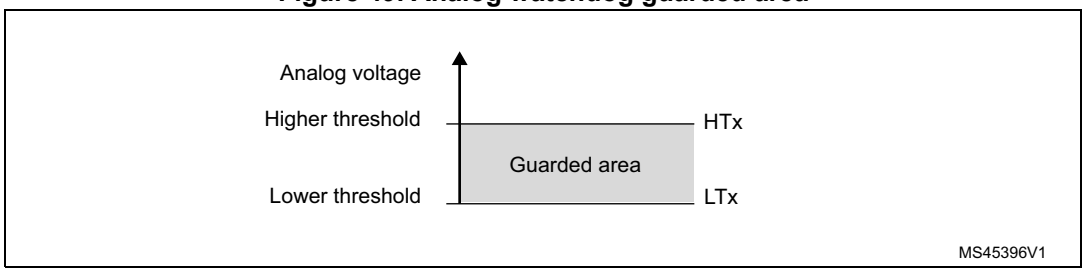

Table 72. Analog watchdog channel selection

Channels guarded by the analog watchdog	AWDSGL bit	AWDEN bit
None	x	0
All channels	0	1
Single(1) channel	1	1

1. Selected by the AWDCH[4:0] bits

15.7.2 ADC_AWD1_OUT output signal generation

The analog watchdog is associated to an internal hardware signal, ADC_AWD1_OUT that is directly connected to the ETR input (external trigger) of some on-chip timers (refer to the timers section for details on how to select the ADC_AWD1_OUT signal as ETR).

ADC_AWD1_OUT is activated when the analog watchdog is enabled:

- ADC_AWD1_OUT is set when a guarded conversion is outside the programmed thresholds.
- ADC_AWD1_OUT is reset after the end of the next guarded conversion which is inside the programmed thresholds. It remains at 1 if the next guarded conversions are still outside the programmed thresholds.
- ADC_AWD1_OUT is also reset when disabling the ADC (when setting ADDIS to 1). Note that stopping conversions (ADSTP set), might clear the ADC_AWD1_OUT state.
- ADC_AWD1_OUT state does not change when the ADC converts the none-guarded channel (see *Figure 50*)

AWD flag is set by hardware and reset by software: AWD flag has no influence on the generation of ADC_AWD1_OUT (as an example, ADC_AWD1_OUT can toggle while AWD flag remains at 1 if the software has not cleared the flag).

The ADC_AWD1_OUT signal is generated by the analog ADC clock domain. This signal can be generated even the APB clock is stopped.

The AWD comparison is performed at the end of each ADC conversion. The ADC_AWD1_OUT rising edge and falling edge occurs two f_{ADC} clock cycles after the comparison.

As ADC_AWD1_OUT is generated by the analog ADC clock domain and AWD flag is generated by the APB clock domain, the rising edges of these signals are not synchronized.

Figure 50. ADC_AWD1_OUT signal generation

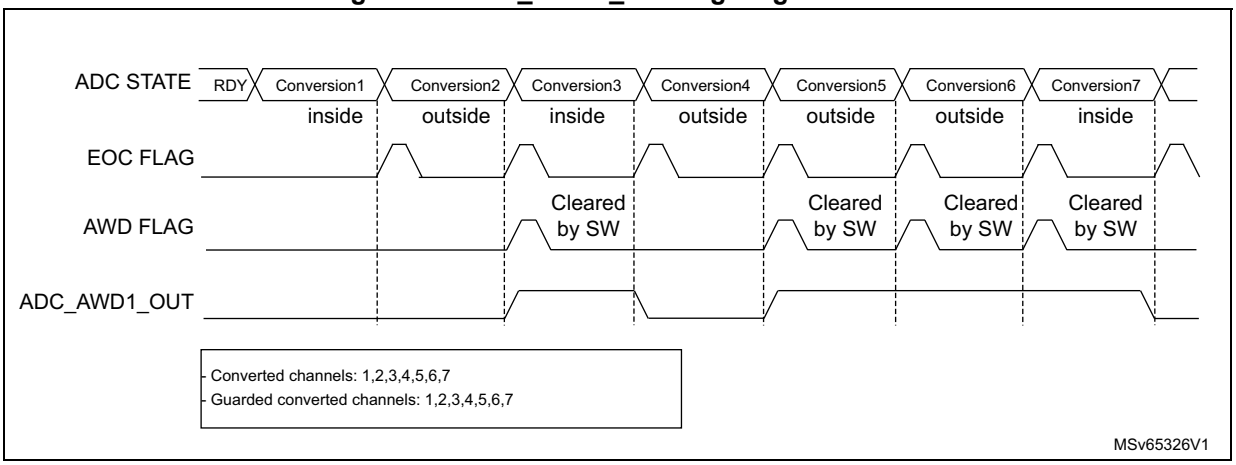

Figure 51. ADC_AWD1_OUT signal generation (AWD flag not cleared by software)

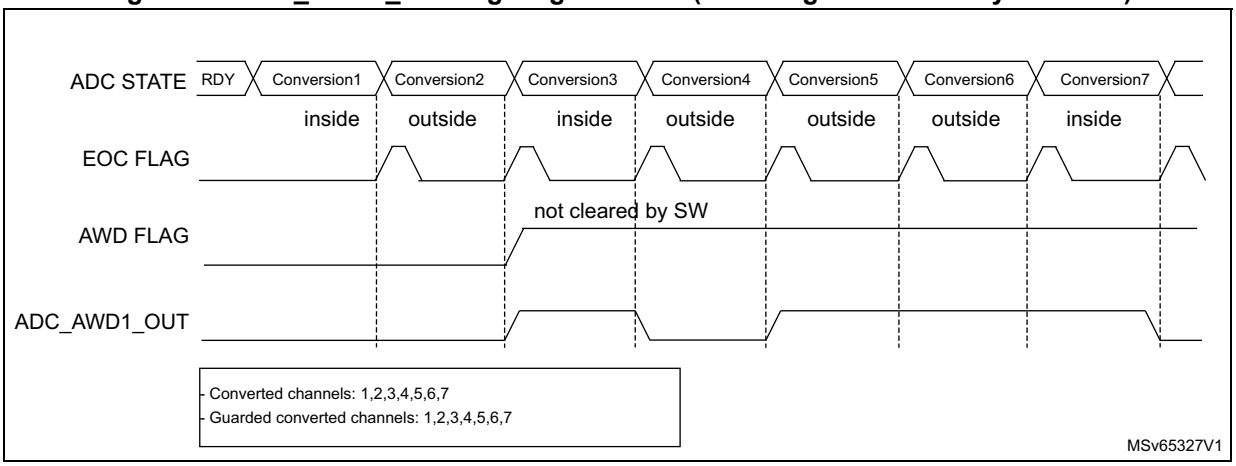

Figure 52. ADC1_AWD_OUT signal generation (on a single channel)

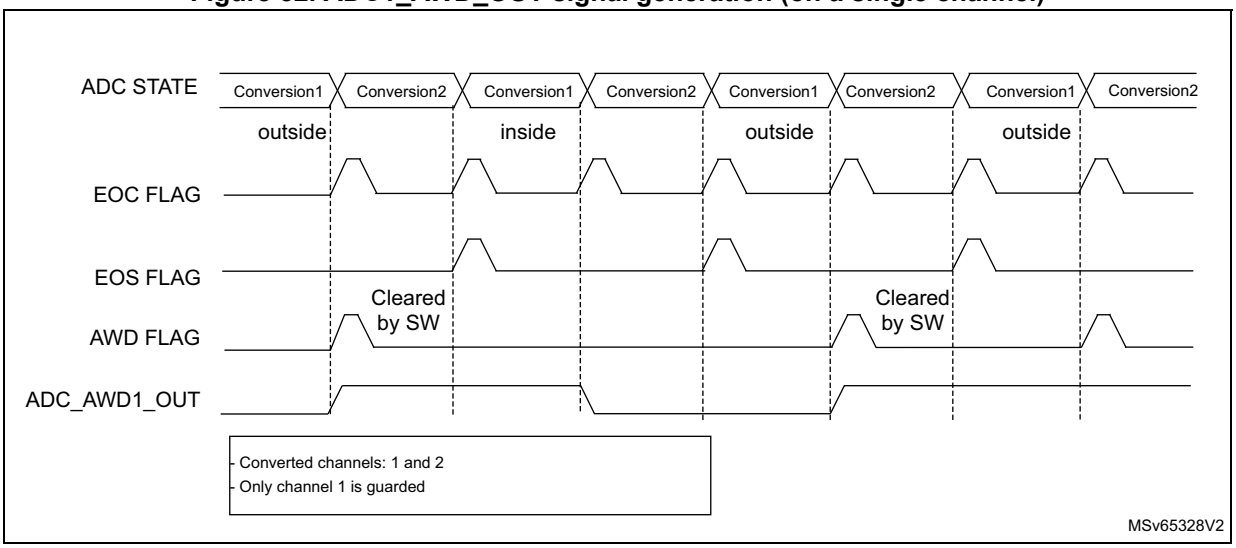

15.7.3 Analog watchdog threshold control

LT[11:0] and HT[11:0] can be changed during an analog-to-digital conversion (that is between the start of the conversion and the end of conversion of the ADC internal state). If LT and HT bits are programmed during the ADC guarded channel conversion, the watchdog function is masked for this conversion. This mask is cleared when starting a new conversion, and the resulting new AWD threshold is applied starting the next ADC conversion result. AWD comparison is performed at each end of conversion. If the current ADC data are out of the new threshold interval, this does not generated any interrupt or an ADC_AWD1_OUT signal. The Interrupt and the ADC_AWD1_OUT generation only occurs at the end of the ADC conversion that started after the threshold update. If ADC_AWD1_OUT is already asserted, programming the new threshold does not deassert the ADC_AWD1_OUT signal.

Figure 53. Analog watchdog threshold update

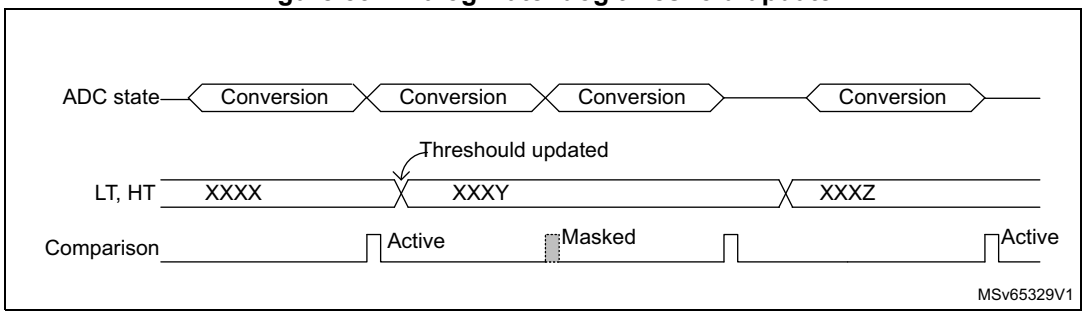

15.8 Temperature sensor and internal reference voltage

The temperature sensor can be used to measure the junction temperature (T_J) of the device. The temperature sensor is internally connected to the ADC V_{IN}[12] input channel which is used to convert the sensor's output voltage to a digital value. The sampling time for the temperature sensor analog pin must be greater than the minimum T_{S_temp} value specified in the datasheet. When not in use, the sensor can be put in power down mode.

The internal voltage reference (V_{REFINT}) provides a stable (bandgap) voltage output for the ADC and comparators. V_{REFINT} is internally connected to the ADC V_{IN}[13] input channel. The precise voltage of V_{REFINT} is individually measured for each part by ST during production test and stored in the system memory area.

Figure 54 shows the block diagram of connections between the temperature sensor, the internal voltage reference and the ADC.

The TSEN bit must be set to enable the conversion of ADC V_{IN}[12] (temperature sensor) and the VREFEN bit must be set to enable the conversion of ADC V_{IN}[13] (V_{REFINT}).

The temperature sensor output voltage changes linearly with temperature. The offset of this line varies from chip to chip due to process variation (up to 45 °C from one chip to another).

The uncalibrated internal temperature sensor is more suited for applications that detect temperature variations instead of absolute temperatures. To improve the accuracy of the temperature sensor measurement, calibration values are stored in system memory for each device by ST during production.

During the manufacturing process, the calibration data of the temperature sensor and the internal voltage reference are stored in the system memory area. The user application can

then read them and use them to improve the accuracy of the temperature sensor or the internal reference. Refer to the datasheet for additional information.

Note: Before entering any Stop mode, the temperature sensor and the internal reference voltage must be disabled by clearing TSEN and VREFEN, respectively.

Main features

- Linearity: ±2 °C max, precision depending on calibration

Figure 54. Temperature sensor and V_{REFINT} channel block diagram

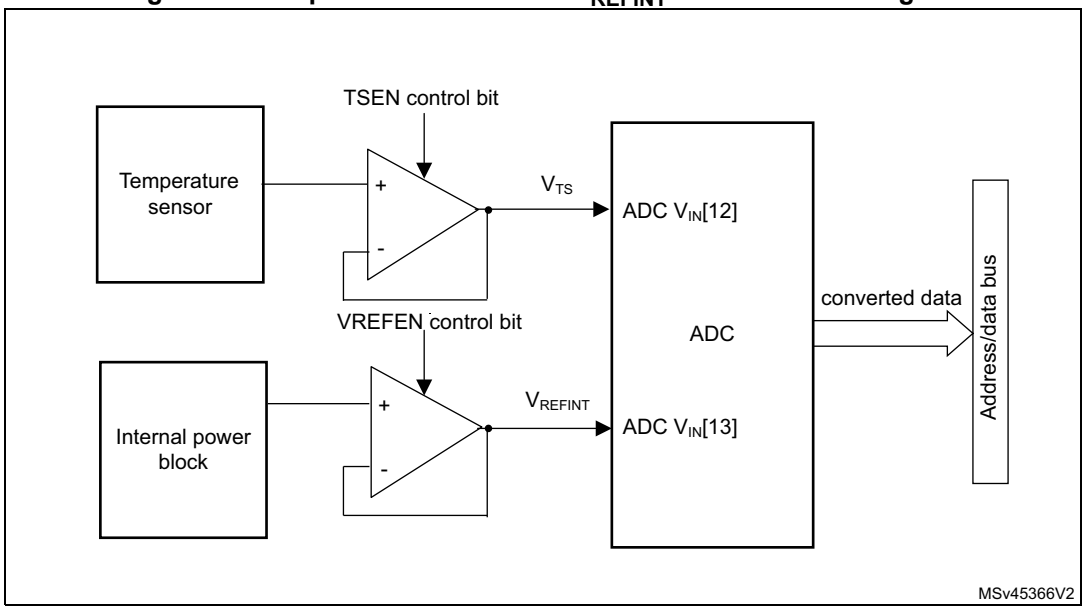

Reading the temperature

1. Select the ADC V_{IN}[12] input channel.
2. Select an appropriate sampling time specified in the device datasheet (T_{S_temp}).
3. Set the TSEN bit in the ADC_CCR register to wake up the temperature sensor from power down mode and wait for its stabilization time (t_{START}).
4. Start the ADC conversion by setting the ADSTART bit in the ADC_CR register (or by external trigger).
5. Read the resulting V_{TS} data in the ADC_DR register.
6. Calculate the temperature using the following formula

$$\text{Temperature (in °C)} = \frac{\text{TS_CAL2_TEMP} - \text{TS_CAL1_TEMP}}{\text{TS_CAL2} - \text{TS_CAL1}} \times (\text{TS_DATA} - \text{TS_CAL1}) + \text{TS_CAL1_TEMP}$$

Where:

- TS_CAL2 is the temperature sensor calibration value acquired at TS_CAL2_TEMP (refer to the datasheet for TS_CAL2 value)
- TS_CAL1 is the temperature sensor calibration value acquired at TS_CAL1_TEMP (refer to the datasheet for TS_CAL1 value)
- TS_DATA is the actual temperature sensor output value converted by ADC

  Refer to the specific device datasheet for more information about TS_CAL1 and TS_CAL2 calibration points.

Note: The sensor has a startup time after waking from power down mode before it can output V_{TS} at the correct level. The ADC also has a startup time after power-on, so to minimize the delay, the ADEN and TSEN bits should be set at the same time.

Calculating the actual V_{DDA} voltage using the internal reference voltage

The V_{DDA} power supply voltage applied to the device may be subject to variation or not precisely known. The embedded internal voltage reference (V_{REFINT}) and its calibration data, acquired by the ADC during the manufacturing process at V_{DDA_Charac}, can be used to evaluate the actual V_{DDA} voltage level.

The following formula gives the actual V_{DDA} voltage supplying the device:

$$V_{DDA} = V_{DDA_Charac} \times VREFINT_CAL / VREFINT_DATA$$

Where:

- V_{DDA_Charac} is the value of V_{DDA} voltage characterized at V_{REFINT} during the manufacturing process. It is specified in the device datasheet.
- VREFINT_CAL is the VREFINT calibration value
- VREFINT_DATA is the actual VREFINT output value converted by ADC

Converting a supply-relative ADC measurement to an absolute voltage value

The ADC is designed to deliver a digital value corresponding to the ratio between the analog power supply and the voltage applied on the converted channel. For most application use cases, it is necessary to convert this ratio into a voltage independent of V_{DDA}. For applications where V_{DDA} is known and ADC converted values are right-aligned you can use the following formula to get this absolute value:

$$V_{CHANNELx} = \frac{V_{DDA}}{NUM_CODES} \times ADC_DATA_x$$

For applications where V_{DDA} value is not known, you must use the internal voltage reference and V_{DDA} can be replaced by the expression provided in *Calculating the actual V_{DDA} voltage using the internal reference voltage*, resulting in the following formula:

$$V_{CHANNELx} = \frac{V_{DDA_Charac} \times VREFINT_CAL \times ADC_DATA_x}{VREFINT_DATA \times NUM_CODES}$$

Where:

- V_{DDA_Charac} is the value of V_{DDA} voltage characterized at V_{REFINT} during the manufacturing process. It is specified in the device datasheet.
- VREFINT_CAL is the VREFINT calibration value
- ADC_DATA_x is the value measured by the ADC on channelx (right-aligned)
- VREFINT_DATA is the actual VREFINT output value converted by the ADC
- NUM_CODES is the number of ADC output codes. For example with 12-bit resolution, it is 2^{12} = 4096 or with 8-bit resolution, 2^8 = 256.

Note: If ADC measurements are done using an output format other than 12 bit right-aligned, all the parameters must first be converted to a compatible format before the calculation is done.

15.9 Battery voltage monitoring

The VBATEN bit in the ADC_CCR register allows the application to measure the backup battery voltage on the VBAT pin. As the V_{BAT} voltage can be higher than V_{DDA}, to ensure the correct operation of the ADC, the VBAT pin is internally connected to a bridge divider. This bridge is automatically enabled when VBATEN is set, to connect V_{BAT} to the ADC V_{IN}[14] input channel. As a consequence, the converted digital value is $V_{BAT}/3$. To prevent any unwanted consumption on the battery, it is recommended to enable the bridge divider only when needed for ADC conversion.

Figure 55. V_{BAT} channel block diagram

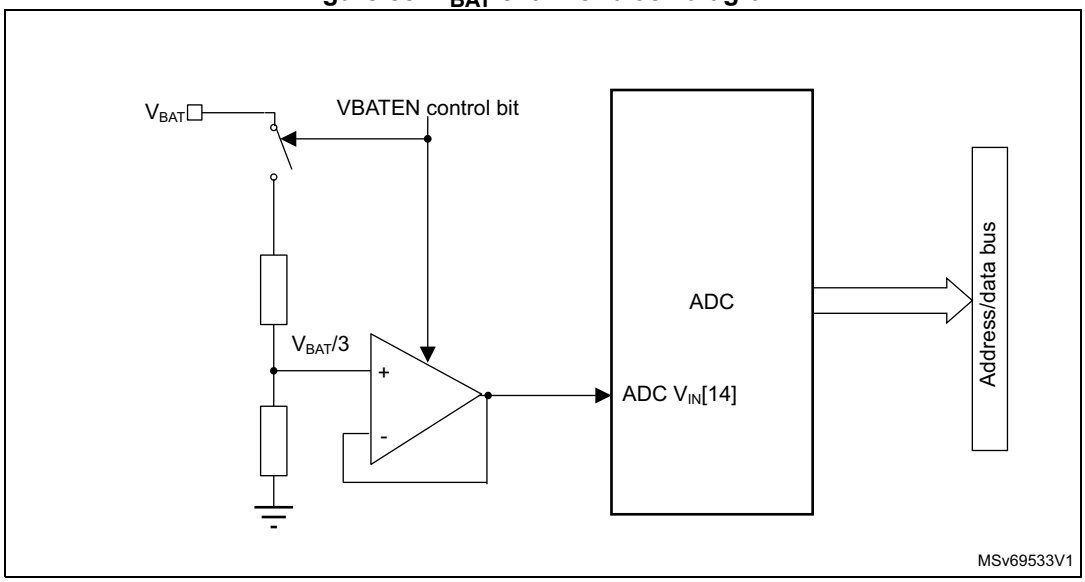

15.10 ADC interrupts

An interrupt can be generated by any of the following events:

- End Of Calibration (EOCAL flag)
- ADC power-up, when the ADC is ready (ADRDY flag)
- End of any conversion (EOC flag)
- End of a sequence of conversions (EOS flag)
- When an analog watchdog detection occurs (AWD flag)
- When the Channel configuration is ready (CCRDY flag)
- When the end of sampling phase occurs (EOSMP flag)
- when a data overrun occurs (OVR flag)

Separate interrupt enable bits are available for flexibility.

Table 73. ADC interrupts

Interrupt event	Event flag	Enable control bit
End Of Calibration	EOCAL	EOCALIE
ADC ready	ADRDY	ADRDYIE
End of conversion	EOC	EOCIE
End of sequence of conversions	EOS	EOSIE
Analog watchdog status bit is set	AWD	AWDIE
Channel Configuration Ready	CCRDY	CCRDYIE
End of sampling phase	EOSMP	EOSMPIE
Overrun	OVR	OVRIE

15.11 ADC registers

Refer to *Section 1.2* for a list of abbreviations used in register descriptions.

15.11.1 ADC interrupt and status register (ADC_ISR)

Address offset: 0x00

Reset value: 0x0000 0000

31	30	29	28	27	26	25	24	23	22	21	20	19	18	17	16
Res.	Res.	Res.	Res.	Res.	Res.	Res.	Res.	Res.	Res.	Res.	Res.	Res.	Res.	Res.	Res.
15	**14**	**13**	**12**	**11**	**10**	**9**	**8**	**7**	**6**	**5**	**4**	**3**	**2**	**1**	**0**
Res.	Res.	CCRDY	Res.	EOCAL	Res.	Res.	Res.	AWD	Res.	Res.	OVR	EOS	EOC	EOSMP	ADRDY
		rc_w1		rc_w1				rc_w1			rc_w1	rc_w1	rc_w1	rc_w1	rc_w1

Bits 31:14 Reserved, must be kept at reset value.

Bit 13 **CCRDY**: Channel Configuration Ready flag

This flag bit is set by hardware when the channel configuration is applied after programming to ADC_CHSELR register or changing CHSELRMOD or SCANDIR. It is cleared by software by programming it to it.

0: Channel configuration update not applied.

1: Channel configuration update is applied.

Note: When the software configures the channels (by programming ADC_CHSELR or changing CHSELRMOD or SCANDIR), it must wait until the CCRDY flag rises before configuring again or starting conversions, otherwise the new configuration (or the START bit) is ignored. Once the flag is asserted, if the software needs to configure again the channels, it must clear the CCRDY flag before proceeding with a new configuration.

Bit 12 Reserved, must be kept at reset value.

Bit 11 **EOCAL**: End Of Calibration flag

This bit is set by hardware when calibration is complete. It is cleared by software writing 1 to it.

0: Calibration is not complete

1: Calibration is complete

Bit 10 Reserved, must be kept at reset value.

Bits 9:8 Reserved, must be kept at reset value.

Bit 7 **AWD**: Analog watchdog flag

This bit is set by hardware when the converted voltage crosses the values programmed in ADC_TR register. It is cleared by software by programming it to 1.

0: No analog watchdog event occurred (or the flag event was already acknowledged and cleared by software)

1: Analog watchdog event occurred

Bits 6:5 Reserved, must be kept at reset value.

Bit 4 **OVR**: ADC overrun

This bit is set by hardware when an overrun occurs, meaning that a new conversion has complete while the EOC flag was already set. It is cleared by software writing 1 to it.

0: No overrun occurred (or the flag event was already acknowledged and cleared by software)

1: Overrun has occurred

Bit 3 **EOS**: End of sequence flag

This bit is set by hardware at the end of the conversion of a sequence of channels selected by the CHSEL bits. It is cleared by software writing 1 to it.

0: Conversion sequence not complete (or the flag event was already acknowledged and cleared by software)

1: Conversion sequence complete

Bit 2 **EOC**: End of conversion flag

This bit is set by hardware at the end of each conversion of a channel when a new data result is available in the ADC_DR register. It is cleared by software writing 1 to it or by reading the ADC_DR register.

0: Channel conversion not complete (or the flag event was already acknowledged and cleared by software)

1: Channel conversion complete

Bit 1 **EOSMP**: End of sampling flag

This bit is set by hardware during the conversion, at the end of the sampling phase.It is cleared by software by programming it to ‘1’.

0: Not at the end of the sampling phase (or the flag event was already acknowledged and cleared by software)

1: End of sampling phase reached

Bit 0 **ADRDY**: ADC ready

This bit is set by hardware after the ADC has been enabled (ADEN = 1) and when the ADC reaches a state where it is ready to accept conversion requests.

It is cleared by software writing 1 to it.

0: ADC not yet ready to start conversion (or the flag event was already acknowledged and cleared by software)

1: ADC is ready to start conversion

15.11.2 ADC interrupt enable register (ADC_IER)

Address offset: 0x04

Reset value: 0x0000 0000

31	30	29	28	27	26	25	24	23	22	21	20	19	18	17	16
Res.	Res.	Res.	Res.	Res.	Res.	Res.	Res.	Res.	Res.	Res.	Res.	Res.	Res.	Res.	Res.
15	14	13	12	11	10	9	8	7	6	5	4	3	2	1	0
Res.	Res.	CCRDYIE	Res.	EOCALIE	Res.	Res.	Res.	AWDIE	Res.	Res.	OVRIE	EOSIE	EOCIE	EOSMPIE	ADRDYIE
		rw		rw				rw			rw	rw	rw	rw	rw

Bits 31:14 Reserved, must be kept at reset value.

Bit 13 **CCRDYIE**: Channel Configuration Ready Interrupt enable

This bit is set and cleared by software to enable/disable the channel configuration ready interrupt.

0: Channel configuration ready interrupt disabled

1: Channel configuration ready interrupt enabled

Note: The software is allowed to write this bit only when ADSTART bit is cleared (this ensures that no conversion is ongoing).

Bit 12 Reserved, must be kept at reset value.

Bit 11 **EOCALIE**: End of calibration interrupt enable

This bit is set and cleared by software to enable/disable the end of calibration interrupt.

0: End of calibration interrupt disabled

1: End of calibration interrupt enabled

Note: The software is allowed to write this bit only when ADSTART bit is cleared (this ensures that no conversion is ongoing).

Bit 10 Reserved, must be kept at reset value.

Bits 9:8 Reserved, must be kept at reset value.

Bit 7 **AWDIE**: Analog watchdog interrupt enable

This bit is set and cleared by software to enable/disable the analog watchdog interrupt.

0: Analog watchdog interrupt disabled

1: Analog watchdog interrupt enabled

Note: The Software is allowed to write this bit only when ADSTART bit is cleared (this ensures that no conversion is ongoing).

Bits 6:5 Reserved, must be kept at reset value.

Bit 4 **OVRIE**: Overrun interrupt enable

This bit is set and cleared by software to enable/disable the overrun interrupt.

0: Overrun interrupt disabled

1: Overrun interrupt enabled. An interrupt is generated when the OVR bit is set.

Note: The software is allowed to write this bit only when ADSTART bit is cleared (this ensures that no conversion is ongoing).

Bit 3 **EOSIE**: End of conversion sequence interrupt enable

This bit is set and cleared by software to enable/disable the end of sequence of conversions interrupt.

0: EOS interrupt disabled

1: EOS interrupt enabled. An interrupt is generated when the EOS bit is set.

Note: The software is allowed to write this bit only when ADSTART bit is cleared (this ensures that no conversion is ongoing).

Bit 2 **EOCIE**: End of conversion interrupt enable

This bit is set and cleared by software to enable/disable the end of conversion interrupt.

0: EOC interrupt disabled

1: EOC interrupt enabled. An interrupt is generated when the EOC bit is set.

Note: The software is allowed to write this bit only when ADSTART bit is cleared (this ensures that no conversion is ongoing).

Bit 1 **EOSMPIE**: End of sampling flag interrupt enable

This bit is set and cleared by software to enable/disable the end of the sampling phase interrupt.

0: EOSMP interrupt disabled.

1: EOSMP interrupt enabled. An interrupt is generated when the EOSMP bit is set.

Note: The software is allowed to write this bit only when ADSTART bit is cleared (this ensures that no conversion is ongoing).

Bit 0 **ADRDYIE**: ADC ready interrupt enable

This bit is set and cleared by software to enable/disable the ADC Ready interrupt.

0: ADRDY interrupt disabled.

1: ADRDY interrupt enabled. An interrupt is generated when the ADRDY bit is set.

Note: The software is allowed to write this bit only when ADSTART bit is cleared (this ensures that no conversion is ongoing).

15.11.3 ADC control register (ADC_CR)

Address offset: 0x08

Reset value: 0x0000 0000

31	30	29	28	27	26	25	24	23	22	21	20	19	18	17	16
ADCAL	Res.	Res.	ADVREGEN	Res.	Res.	Res.	Res.	Res.	Res.	Res.	Res.	Res.	Res.	Res.	Res.
rs			rw												

15	14	13	12	11	10	9	8	7	6	5	4	3	2	1	0
Res.	Res.	Res.	Res.	Res.	Res.	Res.	Res.	Res.	Res.	Res.	ADSTP	Res.	ADSTART	ADDIS	ADEN
											rs		rs	rs	rs

Bit 31 **ADCAL**: ADC calibration

This bit is set by software to start the calibration of the ADC.
It is cleared by hardware after calibration is complete.
0: Calibration complete
1: Write 1 to calibrate the ADC. Read at 1 means that a calibration is in progress.

Note: The software is allowed to set ADCAL only when the ADC is disabled (ADCAL = 0, ADSTART = 0, ADSTP = 0, ADDIS = 0, AUTOFF = 0, and ADEN = 0).

The software is allowed to update the calibration factor by writing ADC_CALFACT only when ADEN = 1 and ADSTART = 0 (ADC enabled and no conversion is ongoing).

Bits 30:29 Reserved, must be kept at reset value.

Bit 28 **ADVREGEN**: ADC Voltage Regulator Enable

This bit is set by software, to enable the ADC internal voltage regulator. The voltage regulator output is available after $t_{ADCVREG_STUP}$.
It is cleared by software to disable the voltage regulator. It can be cleared only if ADEN is cleared.
0: ADC voltage regulator disabled
1: ADC voltage regulator enabled

Note: The software is allowed to program this bit field only when the ADC is disabled (ADCAL = 0, ADSTART = 0, ADSTP = 0, ADDIS = 0 and ADEN = 0).

Bits 27:5 Reserved, must be kept at reset value.

Bit 4 **ADSTP**: ADC stop conversion command

This bit is set by software to stop and discard an ongoing conversion (ADSTP Command).
It is cleared by hardware when the conversion is effectively discarded and the ADC is ready to accept a new start conversion command.
0: No ADC stop conversion command ongoing
1: Write 1 to stop the ADC. Read 1 means that an ADSTP command is in progress.

Note: Setting ADSTP to '1' is only effective when ADSTART = 1 and ADDIS = 0 (ADC is enabled and may be converting and there is no pending request to disable the ADC)

Bit 3 Reserved, must be kept at reset value.

Bit 2 **ADSTART**: ADC start conversion command

This bit is set by software to start ADC conversion. Depending on the EXTEN [1:0] configuration bits, a conversion either starts immediately (software trigger configuration) or once a hardware trigger event occurs (hardware trigger configuration).

It is cleared by hardware:

– In single conversion mode (CONT = 0, DISCEN = 0), when software trigger is selected (EXTEN = 00): at the assertion of the end of Conversion Sequence (EOS) flag.

– In discontinuous conversion mode (CONT = 0, DISCEN = 1), when the software trigger is selected (EXTEN = 00): at the assertion of the end of Conversion (EOC) flag.

– In all other cases: after the execution of the ADSTP command, at the same time as the ADSTP bit is cleared by hardware.

0: No ADC conversion is ongoing.

1: Write 1 to start the ADC. Read 1 means that the ADC is operating and may be converting.

Note: The software is allowed to set ADSTART only when ADEN = 1 and ADDIS = 0 (ADC is enabled and there is no pending request to disable the ADC).

After writing to ADC_CHSELR register or changing CHSELRMOD or SCANDIRW, it is mandatory to wait until CCRDY flag is asserted before setting ADSTART, otherwise, the value written to ADSTART is ignored.

Bit 1 **ADDIS**: ADC disable command

This bit is set by software to disable the ADC (ADDIS command) and put it into power-down state (OFF state).

It is cleared by hardware once the ADC is effectively disabled (ADEN is also cleared by hardware at this time).

0: No ADDIS command ongoing

1: Write 1 to disable the ADC. Read 1 means that an ADDIS command is in progress.

Note: Setting ADDIS to '1' is only effective when ADEN = 1 and ADSTART = 0 (which ensures that no conversion is ongoing)

Bit 0 **ADEN**: ADC enable command

This bit is set by software to enable the ADC. The ADC is effectively ready to operate once the ADRDY flag has been set.

It is cleared by hardware when the ADC is disabled, after the execution of the ADDIS command.

0: ADC is disabled (OFF state)

1: Write 1 to enable the ADC.

Note: The software is allowed to set ADEN only when ADCAL = 0, ADSTP = 0, ADSTART = 0, ADDIS = 0, ADEN = 0, and ADVREGEN = 1.

15.11.4 ADC configuration register 1 (ADC_CFGR1)

Address offset: 0x0C

Reset value: 0x0000 0000

The software is allowed to program ADC_CFGR1 only when ADEN is cleared in ADC_CR.

31	30	29	28	27	26	25	24	23	22	21	20	19	18	17	16
Res.	AWDCH[4:0]					Res.	Res.	AWDEN	AWDSGL	CHSELRMOD	Res.	Res.	Res.	Res.	DISCEN
	rw	rw	rw	rw	rw			rw	rw	rw					rw

15	14	13	12	11	10	9	8	7	6	5	4	3	2	1	0
AUTOFF	WAIT	CONT	OVRMOD	EXTEN[1:0]		Res.	EXTSEL[2:0]			ALIGN	RES[1:0]		SCANDIR	DMACFG	DMAEN
rw	rw	rw	rw	rw	rw		rw	rw	rw	rw	rw	rw	rw	rw	rw

Bit 31 Reserved, must be kept at reset value.

Bits 30:26 **AWDCH[4:0]**: Analog watchdog channel selection

These bits are set and cleared by software. They select the input channel to be guarded by the analog watchdog.

00000: ADC analog input Channel 0 monitored by AWD

00001: ADC analog input Channel 1 monitored by AWD

.....

10001: ADC analog input Channel 17 monitored by AWD

10010: ADC analog input Channel 18 monitored by AWD

Others: Reserved

Note: The channel selected by the AWDCH[4:0] bits must be also set into the CHSELR register.

Bits 25:24 Reserved, must be kept at reset value.

Bit 23 **AWDEN**: Analog watchdog enable

This bit is set and cleared by software.

0: Analog watchdog disabled

1: Analog watchdog enabled

Bit 22 **AWDSGL**: Enable the watchdog on a single channel or on all channels

This bit is set and cleared by software to enable the analog watchdog on the channel identified by the AWDCH[4:0] bits or on all the channels

0: Analog watchdog enabled on all channels

1: Analog watchdog enabled on a single channel

Bit 21 **CHSELRMOD**: Mode selection of the ADC_CHSELR register

This bit is set and cleared by software to control the ADC_CHSELR feature:

0: Each bit of the ADC_CHSELR register enables an input

1: ADC_CHSELR register is able to sequence up to 8 channels

Note: If CCRDY is not yet asserted after channel configuration (writing ADC_CHSELR register or changing CHSELRMOD or SCANDIR), the value written to this bit is ignored.

Bits 20:17 Reserved, must be kept at reset value.

Bit 16 **DISCEN**: Discontinuous mode

This bit is set and cleared by software to enable/disable discontinuous mode.

0: Discontinuous mode disabled

1: Discontinuous mode enabled

Note: It is not possible to have both discontinuous mode and continuous mode enabled: it is forbidden to set both bits DISCEN = 1 and CONT = 1.

Bit 15 **AUTOFF**: Auto-off mode

This bit is set and cleared by software to enable/disable auto-off mode.

0: Auto-off mode disabled

1: Auto-off mode enabled

Bit 14 **WAIT**: Wait conversion mode

This bit is set and cleared by software to enable/disable wait conversion mode.

0: Wait conversion mode off

1: Wait conversion mode on

Bit 13 **CONT**: Single / continuous conversion mode

This bit is set and cleared by software. If it is set, conversion takes place continuously until it is cleared.

0: Single conversion mode

1: Continuous conversion mode

Note: It is not possible to have both discontinuous mode and continuous mode enabled: it is forbidden to set both bits DISCEN = 1 and CONT = 1.

Bit 12 **OVRMOD**: Overrun management mode

This bit is set and cleared by software and configure the way data overruns are managed.

0: ADC_DR register is preserved with the old data when an overrun is detected.

1: ADC_DR register is overwritten with the last conversion result when an overrun is detected.

Bits 11:10 **EXTEN[1:0]**: External trigger enable and polarity selection

These bits are set and cleared by software to select the external trigger polarity and enable the trigger.

00: Hardware trigger detection disabled (conversions can be started by software)

01: Hardware trigger detection on the rising edge

10: Hardware trigger detection on the falling edge

11: Hardware trigger detection on both the rising and falling edges

Bit 9 Reserved, must be kept at reset value.

Bits 8:6 **EXTSEL[2:0]**: External trigger selection

These bits select the external event used to trigger the start of conversion (refer to *Table 67: External triggers* for details):

000: TRG0

001: TRG1

010: TRG2

011: TRG3

100: TRG4

101: TRG5

110: TRG6

111: TRG7

Bit 5 **ALIGN**: Data alignment

This bit is set and cleared by software to select right or left alignment. Refer to *Figure 44: Data alignment and resolution on page 375*

0: Right alignment

1: Left alignment

Bits 4:3 **RES[1:0]**: Data resolution

These bits are written by software to select the resolution of the conversion.

00: 12 bits

01: 10 bits

10: 8 bits

11: 6 bits

Bit 2 **SCANDIR**: Scan sequence direction

This bit is set and cleared by software to select the direction in which the channels is scanned in the sequence. It is effective only if CHSELMOD bit is cleared.

0: Upward scan (from CHSEL0 to CHSEL18)

1: Backward scan (from CHSEL18 to CHSEL0)

Note: If CCRDY is not yet asserted after channel configuration (writing ADC_CHSELR register or changing CHSELRMOD or SCANDIR), the value written to this bit is ignored.

Bit 1 **DMACFG**: Direct memory access configuration

This bit is set and cleared by software to select between two DMA modes of operation and is effective only when DMAEN = 1.

0: DMA one shot mode selected

1: DMA circular mode selected

For more details, refer to *Section 15.5.5: Managing converted data using the DMA on page 377*.

Bit 0 **DMAEN**: Direct memory access enable

This bit is set and cleared by software to enable the generation of DMA requests. This allows the DMA controller to be used to manage automatically the converted data. For more details, refer to *Section 15.5.5: Managing converted data using the DMA on page 377*.

0: DMA disabled

1: DMA enabled

15.11.5 ADC configuration register 2 (ADC_CFGR2)

Address offset: 0x10

Reset value: 0x0000 0000

The software is allowed to program ADC_CFGR2 only when ADEN is cleared in ADC_CR.

31	30	29	28	27	26	25	24	23	22	21	20	19	18	17	16
CKMODE[1:0]		LFTRIG	Res.	Res.	Res.	Res.	Res.	Res.	Res.	Res.	Res.	Res.	Res.	Res.	Res.
rw	rw	rw													

15	14	13	12	11	10	9	8	7	6	5	4	3	2	1	0
Res.	Res.	Res.	Res.	Res.	Res.	Res.	Res.	Res.	Res.	Res.	Res.	Res.	Res.	Res.	Res.

Bits 31:30 **CKMODE[1:0]:** ADC clock mode

These bits are set and cleared by software to define how the analog ADC is clocked:

00: ADCCLK (Asynchronous clock mode), generated at product level (refer to RCC section)

01: PCLK/2 (Synchronous clock mode)

10: PCLK/4 (Synchronous clock mode)

11: PCLK (Synchronous clock mode). This configuration must be enabled only if PCLK has a 50% duty clock cycle (APB prescaler configured inside the RCC must be bypassed and the system clock must by 50% duty cycle)

In all synchronous clock modes, there is no jitter in the delay from a timer trigger to the start of a conversion.

Note: The software is allowed to write these bits only when the ADC is disabled (ADCAL = 0, ADSTART = 0, ADSTP = 0, ADDIS = 0 and ADEN = 0).

Bit 29 **LFTRIG**: Low frequency trigger mode enable

This bit is set and cleared by software.

0: Low Frequency Trigger Mode disabled

1: Low Frequency Trigger Mode enabled

Note: The software is allowed to write this bit only when ADEN bit is cleared.

Bits 28:10 Reserved, must be kept at reset value.

Bits 9:0 Reserved, must be kept at reset value.

15.11.6 ADC sampling time register (ADC_SMPR)

Address offset: 0x14

Reset value: 0x0000 0000

31	30	29	28	27	26	25	24	23	22	21	20	19	18	17	16
Res.	Res.	Res.	Res.	Res.	SMPSEL18	SMPSEL17	SMPSEL16	SMPSEL15	SMPSEL14	SMPSEL13	SMPSEL12	SMPSEL11	SMPSEL10	SMPSEL9	SMPSEL8
					rw	rw	rw	rw	rw	rw	rw	rw	rw	rw	rw

15	14	13	12	11	10	9	8	7	6	5	4	3	2	1	0
SMPSEL7	SMPSEL6	SMPSEL5	SMPSEL4	SMPSEL3	SMPSEL2	SMPSEL1	SMPSEL0	Res.	SMP2[2:0]			Res.	SMP1[2:0]		
rw	rw	rw	rw	rw	rw	rw	rw		rw	rw	rw		rw	rw	rw

Bits 31:27 Reserved, must be kept at reset value.

Bits 26:8 **SMPSELx*:*** Channel-x sampling time selection (x = 18 to 0)

These bits are written by software to define which sampling time is used.

0: Sampling time of CHANNELx use the setting of SMP1[2:0] register.

1: Sampling time of CHANNELx use the setting of SMP2[2:0] register.

Note: The software is allowed to write this bit only when ADSTART = 0 (which ensures that no conversion is ongoing).

Bit 7 Reserved, must be kept at reset value.

Bits 6:4 **SMP2[2:0]:** Sampling time selection 2

These bits are written by software to select the sampling time that applies to all channels.

000: 1.5 ADC clock cycles
001: 3.5 ADC clock cycles
010: 7.5 ADC clock cycles
011: 12.5 ADC clock cycles
100: 19.5 ADC clock cycles
101: 39.5 ADC clock cycles
110: 79.5 ADC clock cycles
111: 160.5 ADC clock cycles

Note: The software is allowed to write this bit only when ADSTART = 0 (which ensures that no conversion is ongoing).

Bit 3 Reserved, must be kept at reset value.

Bits 2:0 **SMP1[2:0]:** *Sampling time selection* 1

These bits are written by software to select the sampling time that applies to all channels.

000: 1.5 ADC clock cycles
001: 3.5 ADC clock cycles
010: 7.5 ADC clock cycles
011: 12.5 ADC clock cycles
100: 19.5 ADC clock cycles
101: 39.5 ADC clock cycles
110: 79.5 ADC clock cycles
111: 160.5 ADC clock cycles

Note: The software is allowed to write this bit only when ADSTART = 0 (which ensures that no conversion is ongoing).

15.11.7 ADC watchdog threshold register (ADC_TR)

Address offset: 0x20

Reset value: 0x0FFF 0000

31	30	29	28	27	26	25	24	23	22	21	20	19	18	17	16
Res.	Res.	Res.	Res.	HT[11:0]											
				rw	rw	rw	rw	rw	rw	rw	rw	rw	rw	rw	rw
15	14	13	12	11	10	9	8	7	6	5	4	3	2	1	0
Res.	Res.	Res.	Res.	LT[11:0]											
				rw	rw	rw	rw	rw	rw	rw	rw	rw	rw	rw	rw

Bits 31:28 Reserved, must be kept at reset value.

Bits 27:16 **HT[11:0]**: *Analog watchdog higher threshold*

These bits are written by software to define the higher threshold for the analog watchdog. Refer to *Section 15.7: Analog window watchdog on page 381*

Note: The software is allowed to write this bit only when ADSTART = 0 (which ensures that no conversion is ongoing).

Bits 15:12 Reserved, must be kept at reset value.

Bits 11:0 **LT[11:0]**: Analog watchdog lower threshold

These bits are written by software to define the lower threshold for the analog watchdog. Refer to *Section 15.7: Analog window watchdog on page 381*.

Note: The software is allowed to write this bit only when ADSTART = 0 (which ensures that no conversion is ongoing).

15.11.8 ADC channel selection register (ADC_CHSELR)

Address offset: 0x28

Reset value: 0x0000 0000

The same register can be used in two different modes:

– Each ADC_CHSELR bit enables an input (CHSELRMOD = 0 in ADC_CFGR1). Refer to the current section.

– ADC_CHSELR is able to sequence up to 8 channels (CHSELRMOD = 1 in ADC_CFGR1). Refer to next section.

CHSELRMOD = 0 in ADC_CFGR1

31	30	29	28	27	26	25	24	23	22	21	20	19	18	17	16
Res.	Res.	Res.	Res.	Res.	Res.	Res.	Res.	Res.	Res.	Res.	Res.	Res.	CHSEL 18	CHSEL 17	CHSEL 16
													rw	rw	rw

15	14	13	12	11	10	9	8	7	6	5	4	3	2	1	0
CHSEL 15	CHSEL 14	CHSEL 13	CHSEL 12	CHSEL 11	CHSEL 10	CHSEL 9	CHSEL 8	CHSEL 7	CHSEL 6	CHSEL 5	CHSEL 4	CHSEL 3	CHSEL 2	CHSEL 1	CHSEL 0
rw	rw	rw	rw	rw	rw	rw	rw	rw	rw	rw	rw	rw	rw	rw	rw

Bits 31:19 Reserved, must be kept at reset value.

Bits 18:0 **CHSEL[18:0]**: Channel-x selection

These bits are written by software and define which channels are part of the sequence of channels to be converted. Refer to *Figure 36: ADC connectivity* for ADC inputs connected to external channels and internal sources.

0: Input Channel-x is not selected for conversion

1: Input Channel-x is selected for conversion

Note: The software is allowed to write this bit only when ADSTART = 0 (which ensures that no conversion is ongoing).

If CCRDY is not yet asserted after channel configuration (writing ADC_CHSELR register or changing CHSELRMOD or SCANDIR), the value written to this bit is ignored.

15.11.9 ADC channel selection register [alternate] (ADC_CHSELR)

Address offset: 0x28

Reset value: 0x0000 0000

The same register can be used in two different modes:

– Each ADC_CHSELR bit enables an input (CHSELRMOD = 0 in ADC_CFGR1). Refer to the current previous section.

– ADC_CHSELR is able to sequence up to 8 channels (CHSELRMOD = 1 in ADC_CFGR1). Refer to this section.

CHSELRMOD = 1 in ADC_CFGR1:

31	30	29	28	27	26	25	24	23	22	21	20	19	18	17	16
SQ8[3:0]				SQ7[3:0]				SQ6[3:0]				SQ5[3:0]			
rw	rw	rw	rw	rw	rw	rw	rw	rw	rw	rw	rw	rw	rw	rw	rw
15	14	13	12	11	10	9	8	7	6	5	4	3	2	1	0
SQ4[3:0]				SQ3[3:0]				SQ2[3:0]				SQ1[3:0]			
rw	rw	rw	rw	rw	rw	rw	rw	rw	rw	rw	rw	rw	rw	rw	rw

Bits 31:28 **SQ8[3:0]**: 8th conversion of the sequence

These bits are programmed by software with the channel number (0...14) assigned to the 8th conversion of the sequence. 0b1111 indicates the end of the sequence.

When 0b1111 (end of sequence) is programmed to the lower sequence channels, these bits are ignored.

0000: CH0

0001: CH1

...

1100: CH12

1101: CH13

1110: CH14

1111: No channel selected (End of sequence)

Note: The software is allowed to write this bit only when ADSTART = 0 (which ensures that no conversion is ongoing).

Bits 27:24 **SQ7[3:0]**: 7th conversion of the sequence

These bits are programmed by software with the channel number (0...14) assigned to the 8th conversion of the sequence. 0b1111 indicates end of the sequence.

When 0b1111 (end of sequence) is programmed to the lower sequence channels, these bits are ignored.

Refer to SQ8[3:0] for a definition of channel selection.

Note: The software is allowed to write this bit only when ADSTART = 0 (which ensures that no conversion is ongoing).

Bits 23:20 **SQ6[3:0]**: 6th conversion of the sequence

These bits are programmed by software with the channel number (0...14) assigned to the 8th conversion of the sequence. 0b1111 indicates end of the sequence.

When 0b1111 (end of sequence) is programmed to the lower sequence channels, these bits are ignored.

Refer to SQ8[3:0] for a definition of channel selection.

Note: The software is allowed to write this bit only when ADSTART = 0 (which ensures that no conversion is ongoing).

Bits 19:16 **SQ5[3:0]**: 5th conversion of the sequence

These bits are programmed by software with the channel number (0...14) assigned to the 8th conversion of the sequence. 0b1111 indicates end of the sequence.

When 0b1111 (end of sequence) is programmed to the lower sequence channels, these bits are ignored.

Refer to SQ8[3:0] for a definition of channel selection.

Note: The software is allowed to write this bit only when ADSTART = 0 (which ensures that no conversion is ongoing).

Bits 15:12 **SQ4[3:0]**: 4th conversion of the sequence

These bits are programmed by software with the channel number (0...14) assigned to the 8th conversion of the sequence. 0b1111 indicates end of the sequence.

When 0b1111 (end of sequence) is programmed to the lower sequence channels, these bits are ignored.

Refer to SQ8[3:0] for a definition of channel selection.

Note: The software is allowed to write this bit only when ADSTART = 0 (which ensures that no conversion is ongoing).

Bits 11:8 **SQ3[3:0]**: 3rd conversion of the sequence

These bits are programmed by software with the channel number (0...14) assigned to the 8th conversion of the sequence. 0b1111 indicates end of the sequence.

When 0b1111 (end of sequence) is programmed to the lower sequence channels, these bits are ignored.

Refer to SQ8[3:0] for a definition of channel selection.

Note: The software is allowed to write this bit only when ADSTART = 0 (which ensures that no conversion is ongoing).

Bits 7:4 **SQ2[3:0]**: 2nd conversion of the sequence

These bits are programmed by software with the channel number (0...14) assigned to the 8th conversion of the sequence. 0b1111 indicates end of the sequence.

When 0b1111 (end of sequence) is programmed to the lower sequence channels, these bits are ignored.

Refer to SQ8[3:0] for a definition of channel selection.

Note: The software is allowed to write this bit only when ADSTART = 0 (which ensures that no conversion is ongoing).

Bits 3:0 **SQ1[3:0]**: 1st conversion of the sequence

These bits are programmed by software with the channel number (0...14) assigned to the 8th conversion of the sequence. 0b1111 indicates end of the sequence.

When 0b1111 (end of sequence) is programmed to the lower sequence channels, these bits are ignored.

Refer to SQ8[3:0] for a definition of channel selection.

Note: The software is allowed to write this bit only when ADSTART = 0 (which ensures that no conversion is ongoing).

15.11.10 ADC data register (ADC_DR)

Address offset: 0x40

Reset value: 0x0000 0000

31	30	29	28	27	26	25	24	23	22	21	20	19	18	17	16
Res.	Res.	Res.	Res.	Res.	Res.	Res.	Res.	Res.	Res.	Res.	Res.	Res.	Res.	Res.	Res.
15	14	13	12	11	10	9	8	7	6	5	4	3	2	1	0
DATA[15:0]															
r	r	r	r	r	r	r	r	r	r	r	r	r	r	r	r

Bits 31:16 Reserved, must be kept at reset value.

Bits 15:0 **DATA[15:0]**: Converted data

These bits are read-only. They contain the conversion result from the last converted channel. The data are left- or right-aligned as shown in *Figure 44*.

Just after a calibration is complete, DATA[6:0] contains the calibration factor.

15.11.11 ADC calibration factor (ADC_CALFACT)

Address offset: 0xB4

Reset value: 0x0000 0000

31	30	29	28	27	26	25	24	23	22	21	20	19	18	17	16
Res.	Res.	Res.	Res.	Res.	Res.	Res.	Res.	Res.	Res.	Res.	Res.	Res.	Res.	Res.	Res.

15	14	13	12	11	10	9	8	7	6	5	4	3	2	1	0
Res.	Res.	Res.	Res.	Res.	Res.	Res.	Res.	Res.	CALFACT[6:0]						
									rw	rw	rw	rw	rw	rw	rw

Bits 31:7 Reserved, must be kept at reset value.

Bits 6:0 **CALFACT[6:0]**: Calibration factor

These bits are written by hardware or by software.

– Once a calibration is complete, they are updated by hardware with the calibration factors.

– Software can write these bits with a new calibration factor. If the new calibration factor is different from the current one stored into the analog ADC, it is then applied once a new conversion is launched.

– Just after a calibration is complete, DATA[6:0] contains the calibration factor.

Note: Software can write these bits only when ADEN=1 (ADC is enabled and no calibration is ongoing and no conversion is ongoing).

15.11.12 ADC common configuration register (ADC_CCR)

Address offset: 0x308

Reset value: 0x0000 0000

31	30	29	28	27	26	25	24	23	22	21	20	19	18	17	16
Res.	Res.	Res.	Res.	Res.	Res.	Res.	VBATEN	TSEN	VREFEN	PRESC[3:0]				Res.	Res.
							rw	rw	rw	rw	rw	rw	rw		

15	14	13	12	11	10	9	8	7	6	5	4	3	2	1	0
Res.	Res.	Res.	Res.	Res.	Res.	Res.	Res.	Res.	Res.	Res.	Res.	Res.	Res.	Res.	Res.

Bits 31:25 Reserved, must be kept at reset value.

Bit 24 **VBATEN**: V_{BAT} enable

This bit is set and cleared by software to enable/disable the V_{BAT} channel.

0: V_{BAT} channel disabled

1: V_{BAT} channel enabled

Note: The software is allowed to write this bit only when ADSTART = 0 (which ensures that no conversion is ongoing)

Bit 23 **TSEN**: Temperature sensor buffer enable

This bit is set and cleared by software to enable/disable the temperature sensor buffer.

0: Temperature sensor buffer disabled

1: Temperature sensor buffer enabled

Note: Software is allowed to write this bit only when ADSTART = 0 (which ensures that no conversion is ongoing).

This bit must be cleared before entering low-power modes to avoid unwanted power consumption.

Bit 22 **VREFEN**: V_{REFINT} buffer enable

This bit is set and cleared by software to enable/disable the V_{REFINT} buffer.

0: V_{REFINT} buffer disabled

1: V_{REFINT} buffer enabled

Note: Software is allowed to write this bit only when ADSTART = 0 (which ensures that no conversion is ongoing).

This bit must be cleared before entering low-power modes to avoid unwanted power consumption.

Bits 21:18 **PRESC[3:0]:** ADC prescaler

Set and cleared by software to select the frequency of the clock to the ADC.

0000: input ADC clock not divided

0001: input ADC clock divided by 2

0010: input ADC clock divided by 4

0011: input ADC clock divided by 6

0100: input ADC clock divided by 8

0101: input ADC clock divided by 10

0110: input ADC clock divided by 12

0111: input ADC clock divided by 16

1000: input ADC clock divided by 32

1001: input ADC clock divided by 64

1010: input ADC clock divided by 128

1011: input ADC clock divided by 256

Other: Reserved

Note: Software is allowed to write these bits only when the ADC is disabled (ADCAL = 0, ADSTART = 0, ADSTP = 0, ADDIS = 0 and ADEN = 0).

Bits 17:0 Reserved, must be kept at reset value.

15.12 ADC register map

The following table summarizes the ADC registers.

Table 74. ADC register map and reset values

Offset	Register name Reset value	31	30	29	28	27	26	25	24	23	22	21	20	19	18	17	16	15	14	13	12	11	10	9	8	7	6	5	4	3	2	1	0
0x00	ADC_ISR	Res.	Res.	Res.	Res.	Res.	Res.	Res.	Res.	Res.	Res.	Res.	Res.	Res.	Res.	Res.	Res.	Res.	Res.	CCRDY	Res.	EOCAL	Res.	Res.	Res.	AWD	Res.	Res.	OVR	EOS	EOC	EOSMP	ADRDY
	Reset value																			0		0				0			0	0	0	0	0

Table 74. ADC register map and reset values (continued)

Offset	Register name Reset value	31	30	29	28	27	26	25	24	23	22	21	20	19	18	17	16	15	14	13	12	11	10	9	8	7	6	5	4	3	2	1	0
0x04	**ADC_IER**	Res.	Res.	Res.	Res.	Res.	Res.	Res.	Res.	Res.	Res.	Res.	Res.	Res.	Res.	Res.	Res.	Res.	Res.	CCRDYIE	Res.	EOCALIE	Res.	Res.	Res.	AWDIE	Res.	Res.	OVRIE	EOSIE	EOCIE	EOSMPIE	ADRDYIE
	Reset value																			0		0				0			0	0	0	0	0
0x08	**ADC_CR**	ADCAL	Res.	Res.	ADVREGEN	Res.	Res.	Res.	Res.	Res.	Res.	Res.	Res.	Res.	Res.	Res.	Res.	Res.	Res.	Res.	Res.	Res.	Res.	Res.	Res.	Res.	Res.	Res.	ADSTP	Res.	ADSTART	ADDIS	ADEN
	Reset value	0			0																								0		0	0	0
0x0C	**ADC_CFGR1**	Res.	AWDCH[4:0]					Res.	Res.	AWDEN	AWDSGL	CHSELRMOD	Res.	Res.	Res.	Res.	DISCEN	AUTOFF	WAIT	CONT	OVRMOD	EXTEN[1:0]		Res.	EXTSEL [2:0]			ALIGN	RES [1:0]		SCANDIR	DMACFG	DMAEN
	Reset value		0	0	0	0	0			0	0	0					0	0	0	0	0	0	0		0	0	0	0	0	0	0	0	0
0x10	**ADC_CFGR2**	CKMODE[1:0]		LFTRIG	Res.	Res.	Res.	Res.	Res.	Res.	Res.	Res.	Res.	Res.	Res.	Res.	Res.	Res.	Res.	Res.	Res.	Res.	Res.	Res.	Res.				Res.			Res.	Res.
	Reset value	0	0	0																													
0x14	**ADC_SMPR**	Res.	Res.	Res.	Res.	Res.	SMPSEL18	SMPSEL17	SMPSEL16	SMPSEL15	SMPSEL14	SMPSEL13	SMPSEL12	SMPSEL11	SMPSEL10	SMPSEL9	SMPSEL8	SMPSEL7	SMPSEL6	SMPSEL5	SMPSEL4	SMPSEL3	SMPSEL2	SMPSEL1	SMPSEL0	Res.	SMP2 [2:0]			Res.	SMP1 [2:0]		
	Reset value						0	0	0	0	0	0	0	0	0	0	0	0	0	0	0	0	0	0	0		0	0	0		0	0	0
0x18	Reserved	Reserved																															
0x1C	Reserved	Reserved																															
0x20	**ADC_TR**	Res.	Res.	Res.	Res.	HT[11:0]												Res.	Res.	Res.	Res.	LT[11:0]											
	Reset value					1	1	1	1	1	1	1	1	1	1	1	1					0	0	0	0	0	0	0	0	0	0	0	0
0x24	Reserved	Reserved																															
0x28	**ADC_CHSELR** (CHSELRMOD= 0)	Res.	Res.	Res.	Res.	Res.	Res.	Res.	Res.	Res.	Res.	Res.	Res.	Res.	CHSEL18	CHSEL17	CHSEL16	CHSEL15	CHSEL14	CHSEL13	CHSEL12	CHSEL11	CHSEL10	CHSEL9	CHSEL8	CHSEL7	CHSEL6	CHSEL5	CHSEL4	CHSEL3	CHSEL2	CHSEL1	CHSEL0
	Reset value														0	0	0	0	0	0	0	0	0	0	0	0	0	0	0	0	0	0	0
0x28	**ADC_CHSELR** (CHSELRMOD= 1)	SQ8[3:0]				SQ7[3:0]				SQ6[3:0]				SQ5[3:0]				SQ4[3:0]				SQ3[3:0]				SQ2[3:0]				SQ1[3:0]			
	Reset value	0	0	0	0	0	0	0	0	0	0	0	0	0	0	0	0	0	0	0	0	0	0	0	0	0	0	0	0	0	0	0	0
0x2C 0x30 0x34 0x38 0x3C	Reserved	Reserved																															
0x40	**ADC_DR**	Res.	Res.	Res.	Res.	Res.	Res.	Res.	Res.	Res.	Res.	Res.	Res.	Res.	Res.	Res.	Res.	DATA[15:0]															
	Reset value																	0	0	0	0	0	0	0	0	0	0	0	0	0	0	0	0

Table 74. ADC register map and reset values (continued)

Offset	Register name Reset value	31	30	29	28	27	26	25	24	23	22	21	20	19	18	17	16	15	14	13	12	11	10	9	8	7	6	5	4	3	2	1	0
...	Reserved	Reserved																															
...	Reserved	Reserved																															
0xB4	**ADC_CALFACT**	Res.	Res.	Res.	Res.	Res.	Res.	Res.	Res.	Res.	Res.	Res.	Res.	Res.	Res.	Res.	Res.	Res.	Res.	Res.	Res.	Res.	Res.	Res.	Res.	Res.	CALFACT[6:0]						
	Reset value																										0	0	0	0	0	0	0
...	Reserved	Reserved																															
0x308	**ADC_CCR**	Res.	Res.	Res.	Res.	Res.	Res.	Res.	VBATEN	TSEN	VREFEN	PRESC3	PRESC2	PRESC1	PRESC0	Res.	Res.	Res.	Res.	Res.	Res.	Res.	Res.	Res.	Res.	Res.	Res.	Res.	Res.	Res.	Res.	Res.	Res.
	Reset value								0	0	0	0	0	0	0																		

Refer to *Section 2.2* for the register boundary addresses.

16 Comparator (COMP)

16.1 Introduction

The devices embed one ultra-low-power comparator, COMP1.

The comparator can be used for a variety of functions including:

- Wake-up from low-power mode triggered by an analog signal,
- Analog signal conditioning,
- Cycle-by-cycle current control loop when combined with a PWM output from a timer.

16.2 COMP main features

- The comparator has configurable plus and minus inputs used for flexible voltage selection:
  - Multiplexed I/O pins
  - Internal reference voltage and three submultiple values (1/4, 1/2, 3/4) provided by scaler (buffered voltage divider)
- Programmable hysteresis
- Programmable speed / consumption
- The outputs can be redirected to an I/O or to timer inputs for triggering:
  - Break events for fast PWM shutdowns
- Comparator outputs with blanking source
- The two comparators can be combined in a window comparator
- Each comparator has interrupt generation capability with wake-up from Sleep and Stop modes (through the EXTI controller)

16.3 COMP functional description

16.3.1 COMP block diagram

The block diagram of the comparators is shown in *Figure 56*.

Figure 56. Comparator block diagram

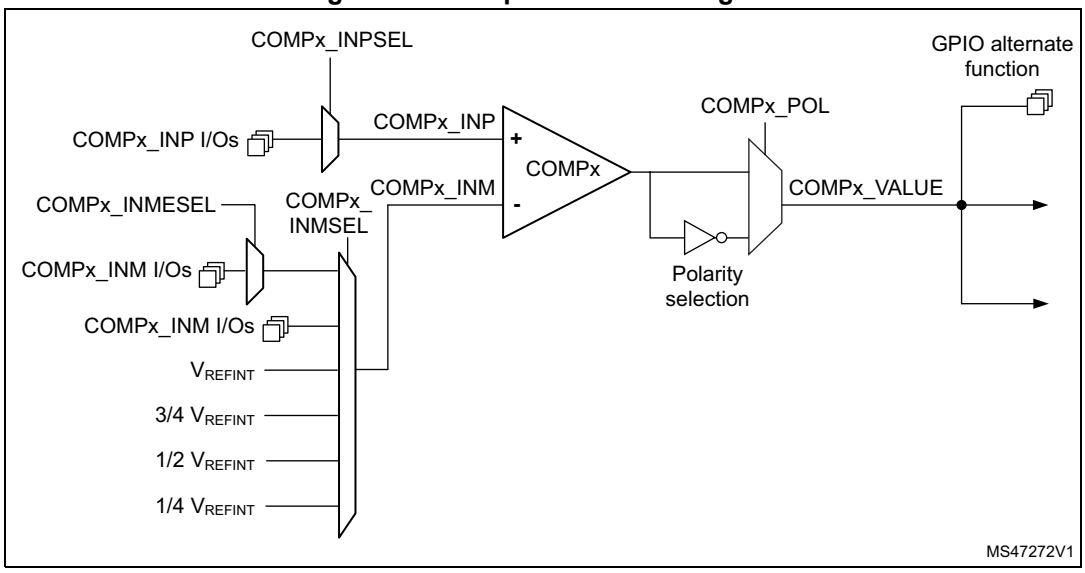

16.3.2 COMP pins and internal signals

The I/Os used as comparators inputs must be configured in analog mode in the GPIOs registers.

The comparator output can be connected to the I/Os using the alternate function channel given in “Alternate function mapping” table in the datasheet.

The output can also be internally redirected to a variety of timer input for the following purposes:

- Emergency shut-down of PWM signals, using BKIN and BKIN2 inputs
- Cycle-by-cycle current control, using OCREF_CLR inputs
- Input capture for timing measures

It is possible to have the comparator output simultaneously redirected internally and externally.

Table 75. COMP1 input plus assignment

COMP1_INP	COMP1_INPSEL
Reserved	00
PB2	01
PA1	10

Table 76. COMP1 input minus assignment

COMP1_INM	COMP1_INMSEL[2:0]	COMP1_INMESEL[1:0]
¼ V_{REFINT}	000	N. A.(1)
½ V_{REFINT}	001	N. A.(1)
¾ V_{REFINT}	010	N. A.(1)
V_{REFINT}	011	N. A.(1)
Reserved	100	N. A.(1)
Reserved	101	N. A.(1)
PA9	110	N. A.(1)
Reserved	111	00
PA0	111	01
PA4	111	10
PA5	111	11

1. N. A.: not affected.

16.3.3 COMP reset and clocks

The COMP clock provided by the clock controller is synchronous with the APB2 clock.

There is no clock enable control bit provided in the RCC controller. Reset and clock enable bits are common for COMP and SYSCFG.

Important: The polarity selection logic and the output redirection to the port works independently from the APB2 clock. This allows the comparator to work even in Stop mode.

16.3.4 Comparator LOCK mechanism

The comparators can be used for safety purposes, such as over-current or thermal protection. For applications having specific functional safety requirements, it is necessary to insure that the comparator programming cannot be altered in case of spurious register access or program counter corruption.

For this purpose, the comparator control and status registers can be write-protected (read-only).

Once the programming is completed, the COMPx LOCK bit can be set to 1. This causes the whole register to become read-only, including the COMPx LOCK bit.

The write protection can only be reset by a MCU reset.

16.3.5 Window comparator

The purpose of window comparator is to monitor the analog voltage if it is within specified voltage range defined by lower and upper threshold.

Two embedded comparators can be utilized to create window comparator. The monitored analog voltage is connected to the non-inverting (plus) inputs of comparators connected together and the upper and lower threshold voltages are connected to the inverting (minus)

inputs of the comparators. Two non-inverting inputs can be connected internally together by enabling WINMODE bit to save one IO for other purposes.

Figure 57. Window mode

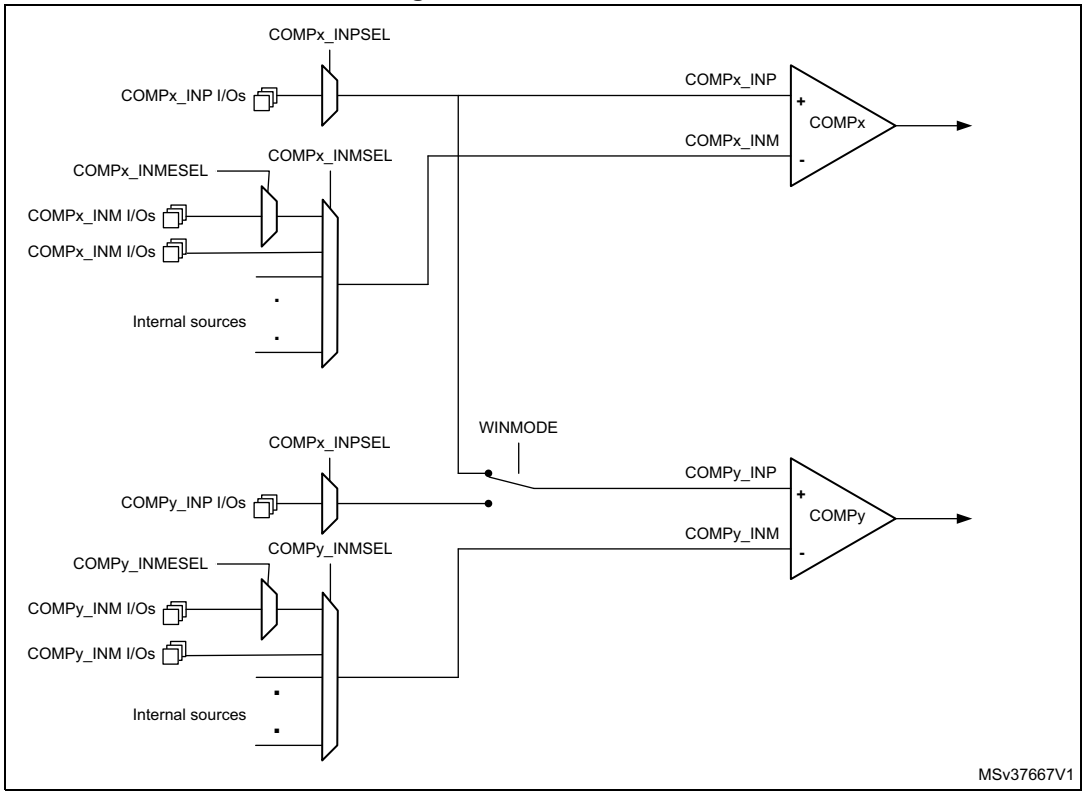

16.3.6 Hysteresis

The comparator includes a programmable hysteresis to avoid spurious output transitions in case of noisy signals. The hysteresis can be disabled if it is not needed (for instance when exiting from low-power mode) to be able to force the hysteresis value using external components.

Figure 58. Comparator hysteresis

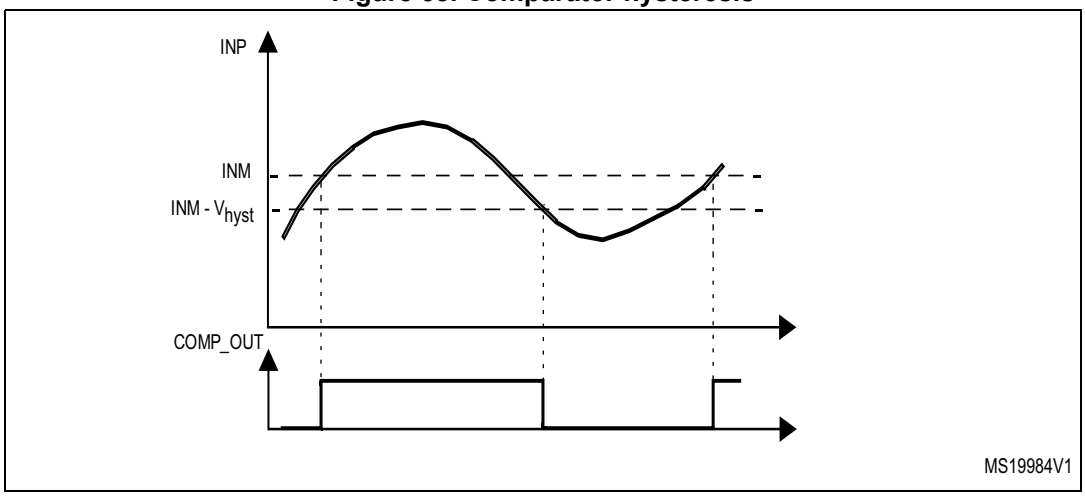

16.3.7 Comparator output blanking function

The purpose of the blanking function is to prevent the current regulation to trip upon short current spikes at the beginning of the PWM period (typically the recovery current in power switches anti parallel diodes).It consists of a selection of a blanking window which is a timer output compare signal. The selection is done by software (refer to the comparator register description for possible blanking signals). Then, the complementary of the blanking signal is ANDed with the comparator output to provide the wanted comparator output. See the example provided in the figure below.

Figure 59. Comparator output blanking

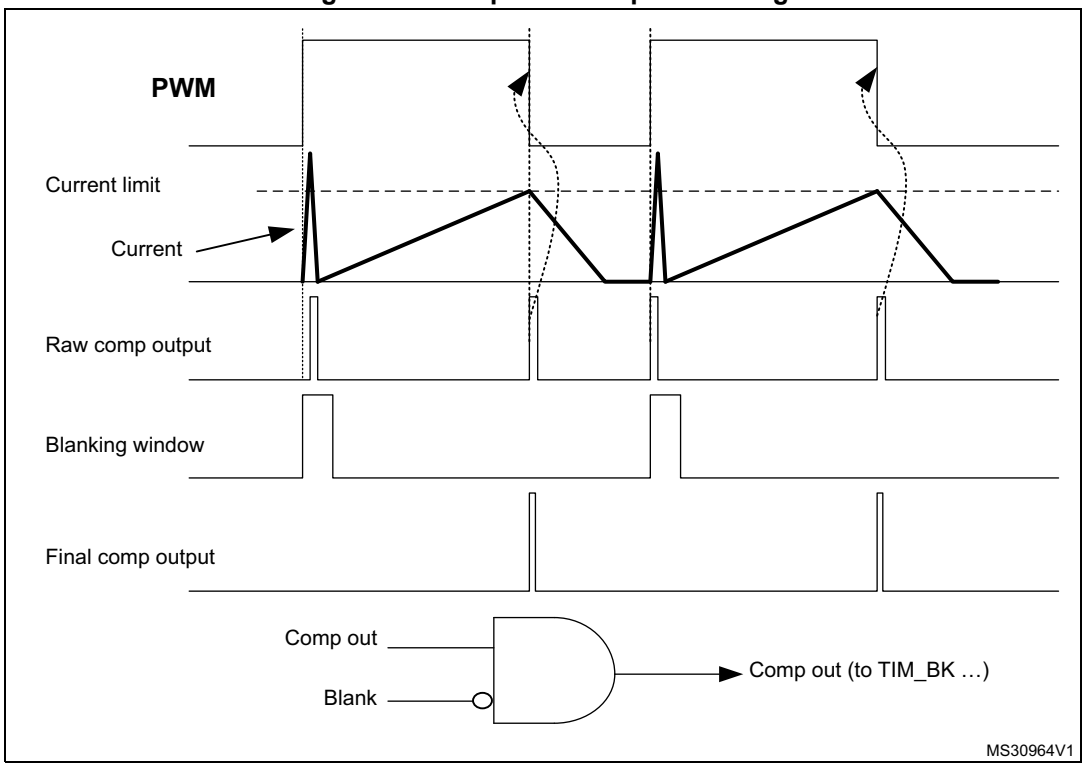

16.3.8 COMP power and speed modes

COMP1 power consumption versus propagation delay can be adjusted to have the optimum trade-off for a given application.

The bits PWRMODE[1:0] in COMPx_CSR registers can be programmed as follows:

00: High speed / full power

01 or 10: Medium speed / medium power

11: Low speed / ultra-low-power

16.4 COMP low-power modes

Table 77. Comparator behavior in the low power modes

Mode	Description
Sleep	No effect on the comparators. Comparator interrupts cause the device to exit the Sleep mode.
Low-power run	No effect.
Low-power sleep	No effect. COMP interrupts cause the device to exit the Low-power sleep mode.
Stop 0	No effect on the comparators. Comparator interrupts cause the device to exit the Stop mode.
Stop 1	
Standby	The COMP registers are powered down and must be reinitialized after exiting Standby or Shutdown mode.
Shutdown	

16.5 COMP interrupts

The comparator outputs are internally connected to the Extended interrupts and events controller. Each comparator has its own EXTI line and can generate either interrupts or events. The same mechanism is used to exit from low-power modes.

Refer to Interrupt and events section for more details.

To enable COMPx interrupt, it is required to follow this sequence:

1. Configure and enable the EXTI line corresponding to the COMPx output event in interrupt mode and select the rising, falling or both edges sensitivity
2. Configure and enable the NVIC IRQ channel mapped to the corresponding EXTI lines
3. Enable COMPx.

Table 78. Interrupt control bits

Interrupt event	Event flag	Enable control bit	Exit from Sleep mode	Exit from Stop modes	Exit from Standby mode
COMP1 output	VALUE in COMP1_CSR	Through EXTI	Yes	Yes	N/A

16.6 COMP registers

16.6.1 Comparator 1 control and status register (COMP1_CSR)

The COMP1_CSR is the Comparator 1 control/status register. It contains all the bits /flags related to comparator1.

Address offset: 0x00

System reset value: 0x0000 0000

31	30	29	28	27	26	25	24	23	22	21	20	19	18	17	16
LOCK	VALUE	Res.	Res.	Res.	INMESEL[1:0]		Res.	SCAL EN	BRG EN	Res.	BLANKING[2:0]			HYST[1:0]	
rs	r				rw	rw		rw	rw		rw	rw	rw	rw	rw

15	14	13	12	11	10	9	8	7	6	5	4	3	2	1	0
POLA RITY	Res.	Res.	Res.	Res.	Res.	Res.	INP SEL[1:0]		INMSEL[2:0]			PWRMODE[1:0]		Res.	EN
rw							rw	rw	rw	rw	rw	rw	rw		rw

Bit 31 **LOCK:** COMP1_CSR register lock bit

This bit is set by software and cleared by a hardware system reset. It locks the whole content of the comparator 1 control register, COMP1_CSR[31:0].

0: COMP1_CSR[31:0] for comparator 1 are read/write

1: COMP1_CSR[31:0] for comparator 1 are read-only

Bit 30 **VALUE:** Comparator 1 output status bit

This bit is read-only. It reflects the current comparator 1 output taking into account POLARITY bit effect.

Bits 29:27 Reserved, must be kept at reset value.

Bits 26:25 **INMESEL[1:0]:** Comparator 1 input minus extended selection bits.

These bits are set and cleared by software (only if LOCK is not set). They select which extended GPIO input is connected to the input minus of comparator if INMSEL = 111.

00: Reserved

01: PA0

10: PA4

11: PA5

Bit 24 Reserved, must be kept at reset value.

Bit 23 **SCALEN**: Voltage scaler enable bit

This bit is set and cleared by software. This bit enable the outputs of the V_{REFINT} divider available on the minus input of the Comparator 1.

0: Bandgap scaler disable

1: Bandgap scaler enable

Bit 22 **BRGEN:** Scaler bridge enable

This bit is set and cleared by software (only if LOCK not set). This bit enable the bridge of the scaler.

0: Scaler resistor bridge disable

1: Scaler resistor bridge enable

If SCALEN is set and BRGEN is reset, BG voltage reference is available but not 1/4 BGAP, 1/2 BGAP, 3/4 BGAP. BGAP value is sent instead of 1/4 BGAP, 1/2 BGAP, 3/4 BGAP.

If SCALEN and BRGEN are set, 1/4 BGAP 1/2 BGAP 3/4 BGAP and BGAP voltage references are available.

Bit 21 Reserved, must be kept at reset value.

Bits 20:18 **BLANKING[2:0]:** Comparator 1 blanking source selection bits

These bits select which timer output controls the comparator 1 output blanking.

000: No blanking

001: TIM1 OC5 selected as blanking source

010: TIM2 OC3 selected as blanking source

All other values: reserved

Bits 17:16 **HYST[1:0]:** Comparator 1 hysteresis selection bits

These bits are set and cleared by software (only if LOCK not set). They select the hysteresis voltage of the comparator 1.

00: No hysteresis

01: Low hysteresis

10: Medium hysteresis

11: High hysteresis

Bit 15 **POLARITY:** Comparator 1 polarity selection bit

This bit is set and cleared by software (only if LOCK not set). It inverts Comparator 1 polarity.

0: Comparator 1 output value not inverted

1: Comparator 1 output value inverted

Bits 14:9 Reserved, must be kept at reset value.

Bits 8:7 **INPSEL[1:0]**: Comparator1 input plus selection bit

This bit is set and cleared by software (only if LOCK not set).

00: Reserved

01: PB2

10: PA2

11: Reserved

Bits 6:4 **INMSEL[2:0]**: Comparator 1 input minus selection bits

These bits are set and cleared by software (only if LOCK not set). They select which input is connected to the input minus of comparator 1.

000 = 1/4 V_{REFINT}

001 = 1/2 V_{REFINT}

010 = 3/4 V_{REFINT}

011 = V_{REFINT}

100 = Reserved

101 = Reserved

110 = PA9

111 = GPIOx selected by INMESEL bits

Bits 3:2 **PWRMODE[1:0]:** Power Mode of the comparator 1

These bits are set and cleared by software (only if LOCK not set). They control the power/speed of the Comparator 1.

00: High speed

01 or 10: Medium speed

11: Ultra low power

Bit 1 Reserved, must be kept at reset value.

Bit 0 **EN:** Comparator 1 enable bit

This bit is set and cleared by software (only if LOCK not set). It switches on Comparator1.

0: Comparator 1 switched OFF

1: Comparator 1 switched ON

16.6.2 COMP register map

The following table summarizes the comparator registers.

Table 79. COMP register map and reset values

Offset	Register	31	30	29	28	27	26	25	24	23	22	21	20	19	18	17	16	15	14	13	12	11	10	9	8	7	6	5	4	3	2	1	0
0x00	**COMP1_CSR**	LOCK	VALUE	Res.	Res.	Res.	INMESEL		Res.	SCALEN	BRGEN.	Res.	BLANKING			HYST		POLARITY.	Res.	Res.	Res.	Res.	Res.	Res.	INPSEL		INMSEL			PWRMODE		Res.	EN
	Reset value	0	0				0	0		0	0		0	0	0	0	0	0							0	0	0	0	0	0	0		0

Refer to *Section 2.2 on page 55* for the register boundary addresses.

17 Touch sensing controller (TSC)

17.1 Introduction

The touch sensing controller provides a simple solution for adding capacitive sensing functionality to any application. Capacitive sensing technology is able to detect finger presence near an electrode that is protected from direct touch by a dielectric (for example glass, plastic). The capacitive variation introduced by the finger (or any conductive object) is measured using a proven implementation based on a surface charge transfer acquisition principle.

The touch sensing controller is fully supported by the STMTouch touch sensing firmware library, which is free to use and allows touch sensing functionality to be implemented reliably in the end application.

17.2 TSC main features

The touch sensing controller has the following main features:

- Proven and robust surface charge transfer acquisition principle
- Supports up to nine capacitive sensing channels without shield
- Supports up to eight capacitive sensing channels when shield is used in group 1 (recommended mode)
- Spread spectrum feature to improve system robustness in noisy environments
- Full hardware management of the charge transfer acquisition sequence
- Programmable charge transfer frequency
- Programmable sampling capacitor I/O pin
- Programmable channel I/O pin
- Programmable max count value to avoid long acquisition when a channel is faulty
- Dedicated end of acquisition and max count error flags with interrupt capability
- One sampling capacitor for up to 3 capacitive sensing channels to reduce the system components
- Compatible with proximity, touchkey, linear and rotary touch sensor implementation
- Designed to operate with STMTouch touch sensing firmware library

Note: The number of capacitive sensing channels is dependent on the size of the packages and subject to I/O availability.

17.3 TSC functional description

17.3.1 TSC block diagram

The block diagram of the touch sensing controller is shown in *Figure 60*.

Figure 60. TSC block diagram

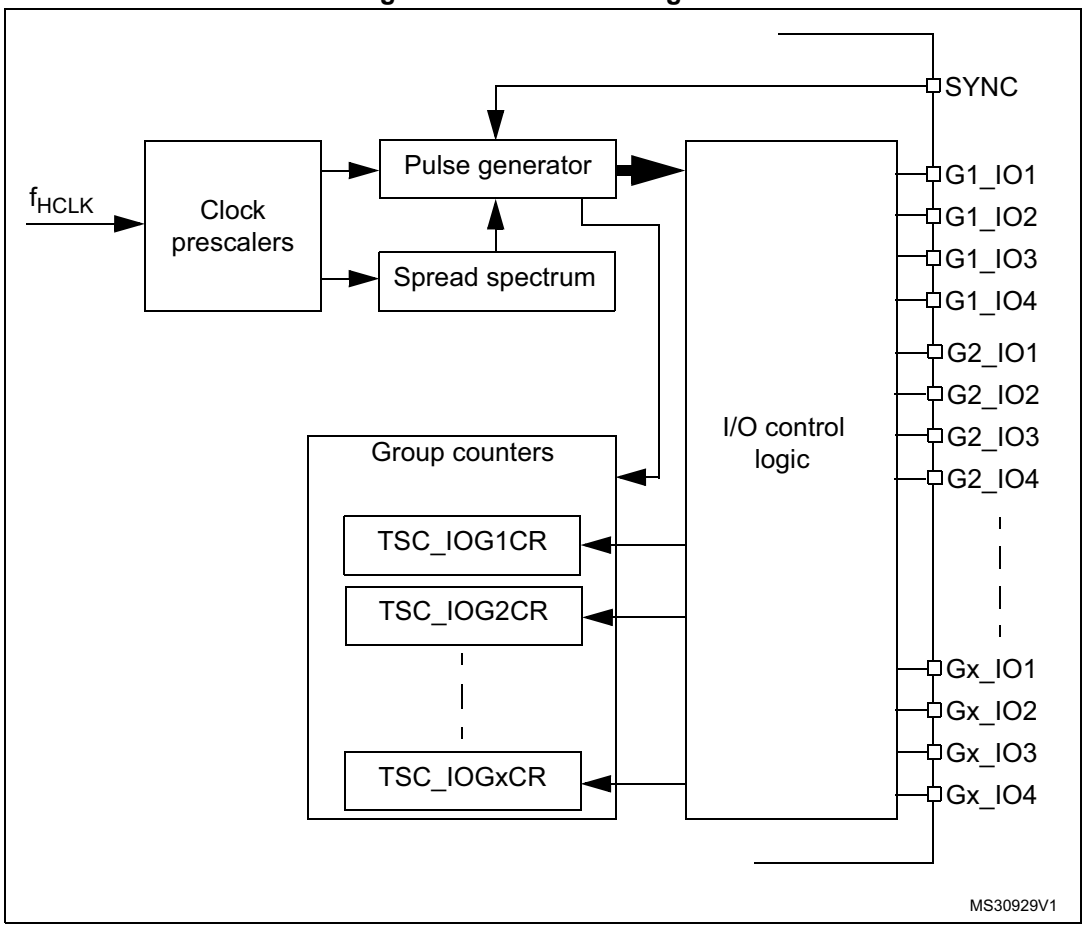

17.3.2 Surface charge transfer acquisition overview

The surface charge transfer acquisition is a proven, robust and efficient way to measure a capacitance. It uses a minimum number of external components to operate with a single ended electrode type. This acquisition is designed around an analog I/O group composed of up to four GPIOs (see *Figure 61*). Several analog I/O groups are available to allow the acquisition of several capacitive sensing channels simultaneously and to support a larger number of capacitive sensing channels. Within a same analog I/O group, the acquisition of the capacitive sensing channels is sequential.

One of the GPIOs is dedicated to the sampling capacitor C_S. Only one sampling capacitor I/O per analog I/O group must be enabled at a time.

The remaining GPIOs are dedicated to the electrodes and are commonly called channels. For some specific needs (such as proximity detection), it is possible to simultaneously enable more than one channel per analog I/O group.

Figure 61. Surface charge transfer analog I/O group structure

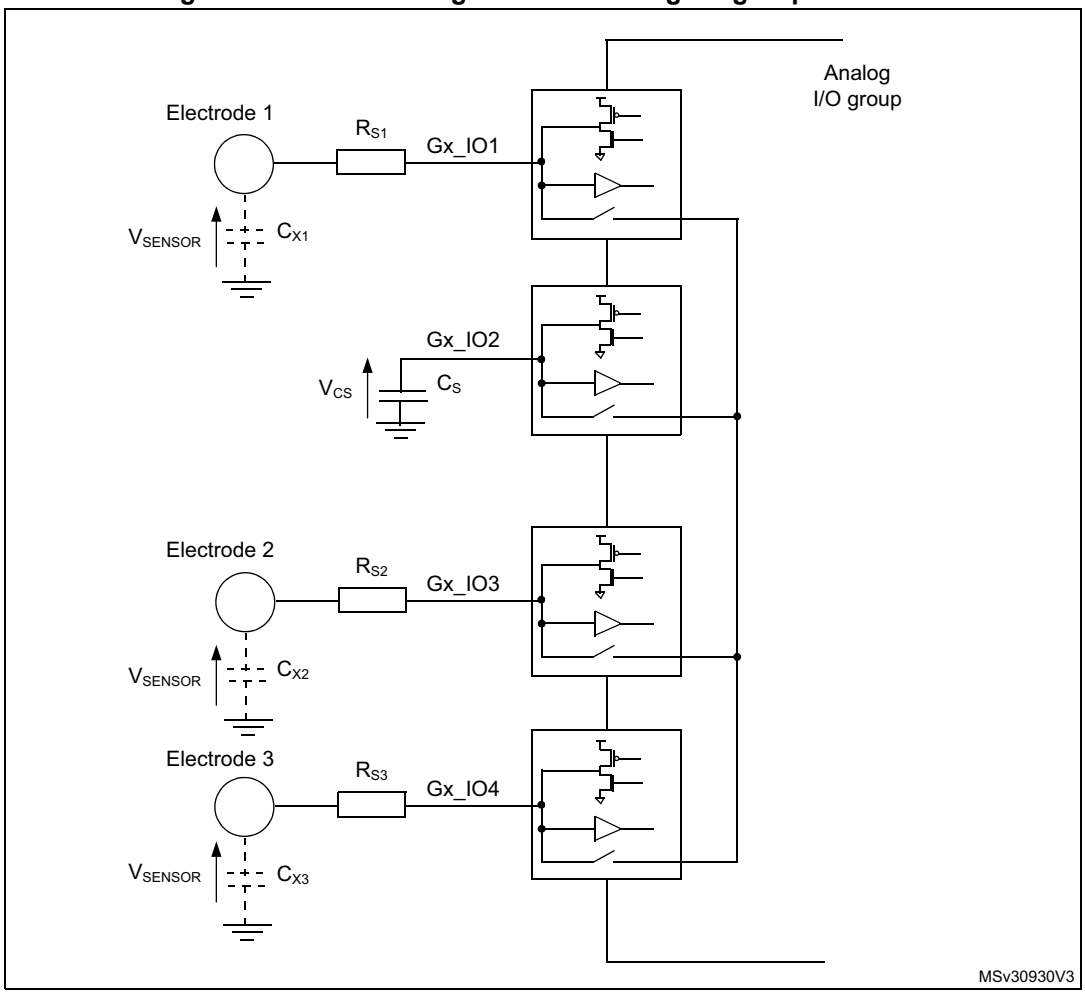

Note: Gx_IOy where x is the analog I/O group number and y the GPIO number within the selected group.

The surface charge transfer acquisition principle consists of charging an electrode capacitance (C_X) and transferring a part of the accumulated charge into a sampling capacitor (C_S). This sequence is repeated until the voltage across C_S reaches a given threshold (V_{IH} in our case). The number of charge transfers required to reach the threshold is a direct representation of the size of the electrode capacitance.

Table 80 details the charge transfer acquisition sequence of the capacitive sensing channel 1. States 3 to 7 are repeated until the voltage across C_S reaches the given threshold. The same sequence applies to the acquisition of the other channels. The electrode serial resistor R_S improves the ESD immunity of the solution.

Table 80. Acquisition sequence summary

State	Gx_IO1 (channel)	Gx_IO2 (sampling)	Gx_IO3 (channel)	Gx_IO4 (channel)	State description
#1	Input floating with analog switch closed	Output open-drain low with analog switch closed	Input floating with analog switch closed		Discharge all C_X and C_S
#2	Input floating				Dead time
#3	Output push-pull high	Input floating			Charge C_{X1}
#4	Input floating				Dead time
#5	Input floating with analog switch closed		Input floating		Charge transfer from C_{X1} to C_S
#6	Input floating				Dead time
#7	Input floating				Measure C_S voltage

Note: Gx_IOy where x is the analog I/O group number and y the GPIO number within the selected group.

The voltage variation over the time on the sampling capacitor C_S is detailed below (refer to *Figure 61* for V_{SENSOR} and V_{CS} definition):

Figure 62. Sampling capacitor voltage variation

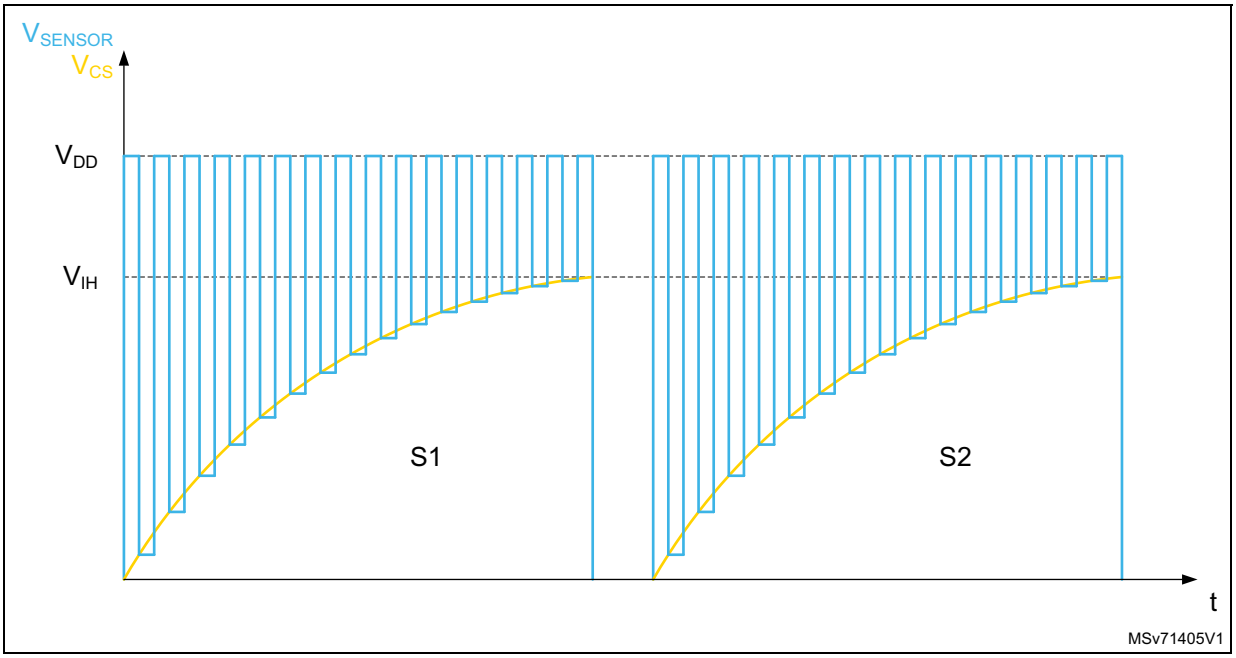

17.3.3 Reset and clocks

The TSC clock source is the AHB clock (HCLK). Two programmable prescalers are used to generate the pulse generator and the spread spectrum internal clocks:

- The pulse generator clock (PGCLK) is defined using the PGPSC[2:0] bits of the TSC_CR register
- The spread spectrum clock (SSCLK) is defined using the SSPSC bit of the TSC_CR register

The reset and clock controller (RCC) provides dedicated bits to enable the touch sensing controller clock and to reset this peripheral. For more information, refer to *Section 8: Reset and clock control (RCC)*.

17.3.4 Charge transfer acquisition sequence

An example of a charge transfer acquisition sequence is detailed in *Figure 63*.

Figure 63. Charge transfer acquisition sequence

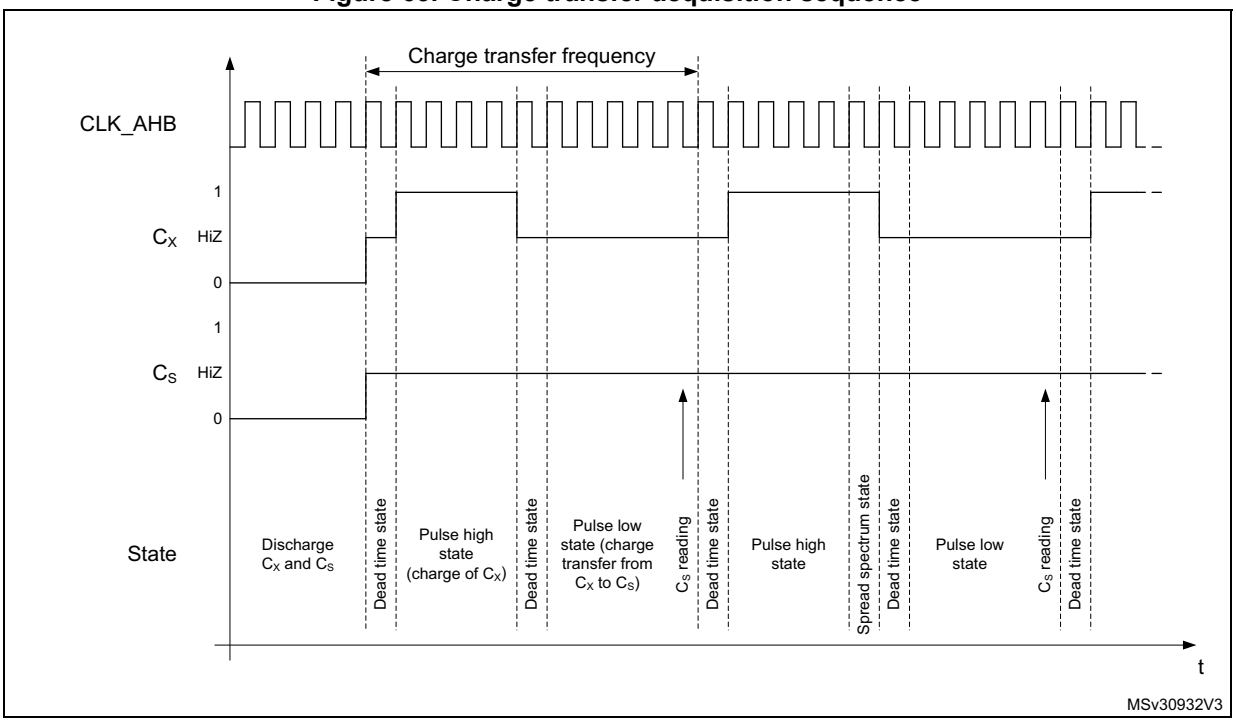

For higher flexibility, the charge transfer frequency is fully configurable. Both the pulse high state (charge of C_X) and the pulse low state (transfer of charge from C_X to C_S) duration can be defined using the CTPH[3:0] and CTPL[3:0] bits in the TSC_CR register. The standard range for the pulse high and low states duration is 500 ns to 2 µs. To ensure a correct measurement of the electrode capacitance, the pulse high state duration must be set to ensure that C_X is always fully charged.

A dead time where both the sampling capacitor I/O and the channel I/O are in input floating state is inserted between the pulse high and low states to ensure an optimum charge transfer acquisition sequence. This state duration is 1 period of HCLK.

At the end of the pulse high state and if the spread spectrum feature is enabled, a variable number of periods of the SSCLK clock are added.

The reading of the sampling capacitor I/O, to determine if the voltage across C_S has reached the given threshold, is performed at the end of the pulse low state.

Note: The following TSC control register configurations are forbidden:

- *bits PGPSC are set to 000 and bits CTPL are set to 0001*
- *bits PGPSC are set to 001 and bits CTPL are set to 0000*

17.3.5 Spread spectrum feature

The spread spectrum feature generates a variation of the charge transfer frequency. This is done to improve the robustness of the charge transfer acquisition in noisy environments and also to reduce the induced emission. The maximum frequency variation is in the range of 10% to 50% of the nominal charge transfer period. For instance, for a nominal charge transfer frequency of 250 kHz (4 µs), the typical spread spectrum deviation is 10% (400 ns) which leads to a minimum charge transfer frequency of ~227 kHz.

In practice, the spread spectrum consists of adding a variable number of SSCLK periods to the pulse high state using the principle shown below:

Figure 64. Spread spectrum variation principle

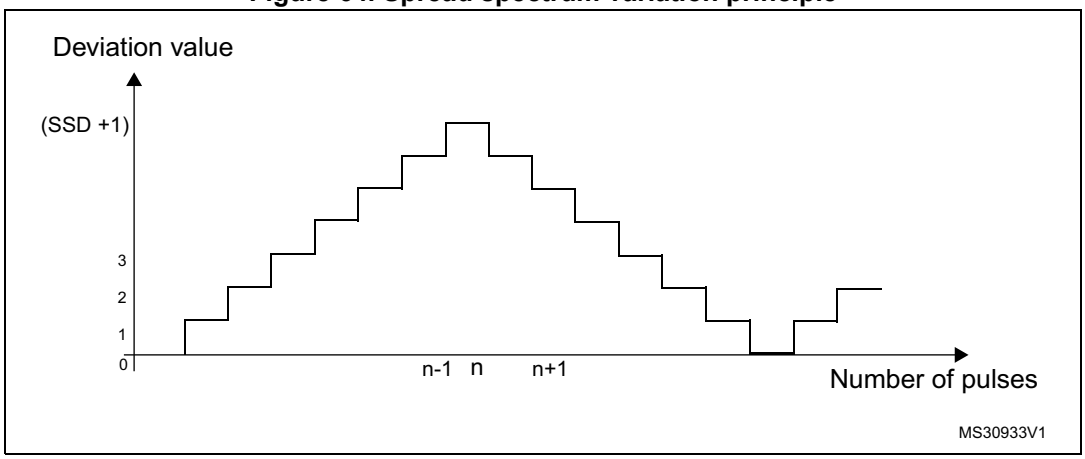

The table below details the maximum frequency deviation with different HCLK settings:

Table 81. Spread spectrum deviation versus AHB clock frequency

f_{HCLK}	Spread spectrum step	Maximum spread spectrum deviation
64 MHz	13.3 ns	3555.5 ns

The spread spectrum feature can be disabled/enabled using the SSE bit in the TSC_CR register. The frequency deviation is also configurable to accommodate the device HCLK clock frequency and the selected charge transfer frequency through the SSPSC and SSD[6:0] bits in the TSC_CR register.

17.3.6 Max count error

The max count error prevents long acquisition times resulting from a faulty capacitive sensing channel. It consists of specifying a maximum count value for the analog I/O group counters. This maximum count value is specified using the MCV[2:0] bits in the TSC_CR register. As soon as an acquisition group counter reaches this maximum value, the ongoing acquisition is stopped and the end of acquisition (EOAF bit) and max count error (MCEF bit) flags are both set. An interrupt can also be generated if the corresponding end of acquisition (EOAIE bit) or/and max count error (MCEIE bit) interrupt enable bits are set.

17.3.7 Sampling capacitor I/O and channel I/O mode selection

To allow the GPIOs to be controlled by the touch sensing controller, the corresponding alternate function must be enabled through the standard GPIO registers and the GPIOxAFR registers.

The GPIOs modes controlled by the TSC are defined using the TSC_IOSCR and TSC_IOCCR register.

When there is no ongoing acquisition, all the I/Os controlled by the touch sensing controller are in default state. While an acquisition is ongoing, only unused I/Os (neither defined as sampling capacitor I/O nor as channel I/O) are in default state. The IODEF bit in the TSC_CR register defines the configuration of the I/Os which are in default state. The table below summarizes the configuration of the I/O depending on its mode.

Table 82. I/O state depending on its mode and IODEF bit value

IODEF bit	Acquisition status	Unused I/O mode	Channel I/O mode	Sampling capacitor I/O mode
0 (output push-pull low)	No	Output push-pull low	Output push-pull low	Output push-pull low
0 (output push-pull low)	Ongoing	Output push-pull low	-	-
1 (input floating)	No	Input floating	Input floating	Input floating
1 (input floating)	Ongoing	Input floating	-	-

Unused I/O mode

An unused I/O corresponds to a GPIO controlled by the TSC peripheral but not defined as an electrode I/O nor as a sampling capacitor I/O.

Sampling capacitor I/O mode

To allow the control of the sampling capacitor I/O by the TSC peripheral, the corresponding GPIO must be first set to alternate output open drain mode and then the corresponding Gx_IOy bit in the TSC_IOSCR register must be set.

Only one sampling capacitor per analog I/O group must be enabled at a time.

Channel I/O mode

To allow the control of the channel I/O by the TSC peripheral, the corresponding GPIO must be first set to alternate output push-pull mode and the corresponding Gx_IOy bit in the TSC_IOCCR register must be set.

For proximity detection where a higher equivalent electrode surface is required or to speed-up the acquisition process, it is possible to enable and simultaneously acquire several channels belonging to the same analog I/O group.

Note: During the acquisition phase and even if the TSC peripheral alternate function is not enabled, as soon as the TSC_IOSCR or TSC_IOCCR bit is set, the corresponding GPIO analog switch is automatically controlled by the touch sensing controller.

17.3.8 Acquisition mode

The touch sensing controller offers two acquisition modes:

- Normal acquisition mode: the acquisition starts as soon as the START bit in the TSC_CR register is set.
- Synchronized acquisition mode: the acquisition is enabled by setting the START bit in the TSC_CR register but only starts upon the detection of a falling edge or a rising edge and high level on the SYNC input pin. This mode is useful for synchronizing the capacitive sensing channels acquisition with an external signal without additional CPU load.

The GxE bits in the TSC_IOGCSR registers specify which analog I/O groups are enabled (corresponding counter is counting). The C_S voltage of a disabled analog I/O group is not monitored and this group does not participate in the triggering of the end of acquisition flag. However, if the disabled analog I/O group contains some channels, they are pulsed.

When the C_S voltage of an enabled analog I/O group reaches the given threshold, the corresponding GxS bit of the TSC_IOGCSR register is set. When the acquisition of all enabled analog I/O groups is complete (all GxS bits of all enabled analog I/O groups are set), the EOAF flag in the TSC_ISR register is set. An interrupt request is generated if the EOAIE bit in the TSC_IER register is set.

In the case that a max count error is detected, the ongoing acquisition is stopped and both the EOAF and MCEF flags in the TSC_ISR register are set. Interrupt requests can be generated for both events if the corresponding bits (EOAIE and MCEIE bits of the TSCIER register) are set. Note that when the max count error is detected the remaining GxS bits in the enabled analog I/O groups are not set.

To clear the interrupt flags, the corresponding EOAIC and MCEIC bits in the TSC_ICR register must be set.

The analog I/O group counters are cleared when a new acquisition is started. They are updated with the number of charge transfer cycles generated on the corresponding channel(s) upon the completion of the acquisition.

17.3.9 I/O hysteresis and analog switch control

In order to offer a higher flexibility, the touch sensing controller is able to take the control of the Schmitt trigger hysteresis and analog switch of each Gx_IOy. This control is available whatever the I/O control mode is (controlled by standard GPIO registers or other peripherals) assuming that the touch sensing controller is enabled. This may be useful to perform a different acquisition sequence or for other purposes.

In order to improve the system immunity, the Schmitt trigger hysteresis of the GPIOs controlled by the TSC must be disabled by resetting the corresponding Gx_IOy bit in the TSC_IOHCR register.

17.4 TSC low-power modes

Table 83. Effect of low-power modes on TSC

Mode	Description
Sleep	No effect. Peripheral interrupts cause the device to exit Sleep mode.
Low power run	No effect.
Low power sleep	No effect. Peripheral interrupts cause the device to exit Low-power sleep mode.
Stop 0	Peripheral registers content is kept.
Stop 1	
Standby	Powered-down. The peripheral must be reinitialized after exiting Standby or Shutdown mode.
Shutdown	

17.5 TSC interrupts

Table 84. Interrupt control bits

Interrupt event	Enable control bit	Event flag	Clear flag bit	Exit the Sleep mode	Exit the Stop mode	Exit the Standby mode
End of acquisition	EOAIE	EOAIF	EOAIC	Yes	No	No
Max count error	MCEIE	MCEIF	MCEIC	Yes	No	No

17.6 TSC registers

Refer to *Section 1.2* of the reference manual for a list of abbreviations used in register descriptions.

The peripheral registers can be accessed by words (32-bit).

17.6.1 TSC control register (TSC_CR)

Address offset: 0x00

Reset value: 0x0000 0000

31	30	29	28	27	26	25	24	23	22	21	20	19	18	17	16
CTPH[3:0]				CTPL[3:0]				SSD[6:0]							SSE
rw	rw	rw	rw	rw	rw	rw	rw	rw	rw	rw	rw	rw	rw	rw	rw

15	14	13	12	11	10	9	8	7	6	5	4	3	2	1	0
SSPSC	PGPSC[2:0]			Res.	Res.	Res.	Res.	MCV[2:0]			IODEF	SYNC POL	AM	START	TSCE
rw	rw	rw	rw					rw	rw	rw	rw	rw	rw	rw	rw

Bits 31:28 **CTPH[3:0]**: Charge transfer pulse high

These bits are set and cleared by software. They define the duration of the high state of the charge transfer pulse (charge of C_X).

0000: 1x t_{PGCLK}
0001: 2x t_{PGCLK}
...
1111: 16x t_{PGCLK}

Note: These bits must not be modified when an acquisition is ongoing.

Bits 27:24 **CTPL[3:0]**: Charge transfer pulse low

These bits are set and cleared by software. They define the duration of the low state of the charge transfer pulse (transfer of charge from C_X to C_S).

0000: 1x t_{PGCLK}
0001: 2x t_{PGCLK}
...
1111: 16x t_{PGCLK}

Note: These bits must not be modified when an acquisition is ongoing.

Note: Some configurations are forbidden. Refer to the Section 17.3.4: Charge transfer acquisition sequence for details.

Bits 23:17 **SSD[6:0]**: Spread spectrum deviation

These bits are set and cleared by software. They define the spread spectrum deviation which consists in adding a variable number of periods of the SSCLK clock to the charge transfer pulse high state.

0000000: 1x t_{SSCLK}
0000001: 2x t_{SSCLK}
...
1111111: 128x t_{SSCLK}

Note: These bits must not be modified when an acquisition is ongoing.

Bit 16 **SSE**: Spread spectrum enable

This bit is set and cleared by software to enable/disable the spread spectrum feature.

0: Spread spectrum disabled
1: Spread spectrum enabled

Note: This bit must not be modified when an acquisition is ongoing.

Bit 15 **SSPSC**: Spread spectrum prescaler

This bit is set and cleared by software. It selects the AHB clock divider used to generate the spread spectrum clock (SSCLK).

0: f_{HCLK}
1: f_{HCLK} /2

Note: This bit must not be modified when an acquisition is ongoing.

Bits 14:12 **PGPSC[2:0]**: Pulse generator prescaler

These bits are set and cleared by software.They select the AHB clock divider used to generate the pulse generator clock (PGCLK).

000: f_{HCLK}
001: f_{HCLK} /2
010: f_{HCLK} /4
011: f_{HCLK} /8
100: f_{HCLK} /16
101: f_{HCLK} /32
110: f_{HCLK} /64
111: f_{HCLK} /128

Note: These bits must not be modified when an acquisition is ongoing.

Note: Some configurations are forbidden. Refer to the Section 17.3.4: Charge transfer acquisition sequence for details.

Bits 11:8 Reserved, must be kept at reset value.

Bits 7:5 **MCV[2:0]**: Max count value

These bits are set and cleared by software. They define the maximum number of charge transfer pulses that can be generated before a max count error is generated.

000: 255
001: 511
010: 1023
011: 2047
100: 4095
101: 8191
110: 16383
111: reserved

Note: These bits must not be modified when an acquisition is ongoing.

Bit 4 **IODEF**: I/O Default mode

This bit is set and cleared by software. It defines the configuration of all the TSC I/Os when there is no ongoing acquisition. When there is an ongoing acquisition, it defines the configuration of all unused I/Os (not defined as sampling capacitor I/O or as channel I/O).

0: I/Os are forced to output push-pull low
1: I/Os are in input floating

Note: This bit must not be modified when an acquisition is ongoing.

Bit 3 **SYNCPOL**: Synchronization pin polarity

This bit is set and cleared by software to select the polarity of the synchronization input pin.

0: Falling edge only
1: Rising edge and high level

Bit 2 **AM**: Acquisition mode

This bit is set and cleared by software to select the acquisition mode.

0: Normal acquisition mode (acquisition starts as soon as START bit is set)

1: Synchronized acquisition mode (acquisition starts if START bit is set and when the selected signal is detected on the SYNC input pin)

Note: This bit must not be modified when an acquisition is ongoing.

Bit 1 **START**: Start a new acquisition

This bit is set by software to start a new acquisition. It is cleared by hardware as soon as the acquisition is complete or by software to cancel the ongoing acquisition.

0: Acquisition not started

1: Start a new acquisition

Bit 0 **TSCE**: Touch sensing controller enable

This bit is set and cleared by software to enable/disable the touch sensing controller.

0: Touch sensing controller disabled

1: Touch sensing controller enabled

Note: When the touch sensing controller is disabled, TSC registers settings have no effect.

17.6.2 TSC interrupt enable register (TSC_IER)

Address offset: 0x04

Reset value: 0x0000 0000

31	30	29	28	27	26	25	24	23	22	21	20	19	18	17	16
Res.	Res.	Res.	Res.	Res.	Res.	Res.	Res.	Res.	Res.	Res.	Res.	Res.	Res.	Res.	Res.

15	14	13	12	11	10	9	8	7	6	5	4	3	2	1	0
Res.	Res.	Res.	Res.	Res.	Res.	Res.	Res.	Res.	Res.	Res.	Res.	Res.	Res.	MCEIE	EOAIE
														rw	rw

Bits 31:2 Reserved, must be kept at reset value.

Bit 1 **MCEIE**: Max count error interrupt enable

This bit is set and cleared by software to enable/disable the max count error interrupt.

0: Max count error interrupt disabled

1: Max count error interrupt enabled

Bit 0 **EOAIE**: End of acquisition interrupt enable

This bit is set and cleared by software to enable/disable the end of acquisition interrupt.

0: End of acquisition interrupt disabled

1: End of acquisition interrupt enabled

17.6.3 TSC interrupt clear register (TSC_ICR)

Address offset: 0x08

Reset value: 0x0000 0000

31	30	29	28	27	26	25	24	23	22	21	20	19	18	17	16
Res.	Res.	Res.	Res.	Res.	Res.	Res.	Res.	Res.	Res.	Res.	Res.	Res.	Res.	Res.	Res.
15	14	13	12	11	10	9	8	7	6	5	4	3	2	1	0
Res.	Res.	Res.	Res.	Res.	Res.	Res.	Res.	Res.	Res.	Res.	Res.	Res.	Res.	MCEIC	EOAIC
														rw	rw

Bits 31:2 Reserved, must be kept at reset value.

Bit 1 **MCEIC**: Max count error interrupt clear

This bit is set by software to clear the max count error flag and it is cleared by hardware when the flag is reset. Writing a 0 has no effect.

0: No effect

1: Clears the corresponding MCEF of the TSC_ISR register

Bit 0 **EOAIC**: End of acquisition interrupt clear

This bit is set by software to clear the end of acquisition flag and it is cleared by hardware when the flag is reset. Writing a 0 has no effect.

0: No effect

1: Clears the corresponding EOAF of the TSC_ISR register

17.6.4 TSC interrupt status register (TSC_ISR)

Address offset: 0x0C

Reset value: 0x0000 0000

31	30	29	28	27	26	25	24	23	22	21	20	19	18	17	16
Res.	Res.	Res.	Res.	Res.	Res.	Res.	Res.	Res.	Res.	Res.	Res.	Res.	Res.	Res.	Res.
15	14	13	12	11	10	9	8	7	6	5	4	3	2	1	0
Res.	Res.	Res.	Res.	Res.	Res.	Res.	Res.	Res.	Res.	Res.	Res.	Res.	Res.	MCEF	EOAF
														r	r

Bits 31:2 Reserved, must be kept at reset value.

Bit 1 **MCEF**: Max count error flag

This bit is set by hardware as soon as an analog I/O group counter reaches the max count value specified. It is cleared by software writing 1 to the bit MCEIC of the TSC_ICR register.

0: No max count error (MCE) detected

1: Max count error (MCE) detected

Bit 0 **EOAF**: End of acquisition flag

This bit is set by hardware when the acquisition of all enabled group is complete (all GxS bits of all enabled analog I/O groups are set or when a max count error is detected). It is cleared by software writing 1 to the bit EOAIC of the TSC_ICR register.

0: Acquisition is ongoing or not started

1: Acquisition is complete

17.6.5 TSC I/O hysteresis control register (TSC_IOHCR)

Address offset: 0x10

Reset value: 0xFFFF FFFF

31	30	29	28	27	26	25	24	23	22	21	20	19	18	17	16
Res.	Res.	Res.	Res.	G7_IO4	G7_IO3	G7_IO2	G7_IO1	G6_IO4	G6_IO3	G6_IO2	G6_IO1	G5_IO4	G5_IO3	G5_IO2	G5_IO1
				rw	rw	rw	rw	rw	rw	rw	rw	rw	rw	rw	rw
15	14	13	12	11	10	9	8	7	6	5	4	3	2	1	0
G4_IO4	G4_IO3	G4_IO2	G4_IO1	G3_IO4	G3_IO3	G3_IO2	G3_IO1	G2_IO4	G2_IO3	G2_IO2	G2_IO1	G1_IO4	G1_IO3	G1_IO2	G1_IO1
rw	rw	rw	rw	rw	rw	rw	rw	rw	rw	rw	rw	rw	rw	rw	rw

Bits 31:28 Reserved, must be kept at reset value.

Bits 27:0 **Gx_IOy**: Gx_IOy Schmitt trigger hysteresis mode

These bits are set and cleared by software to enable/disable the Gx_IOy Schmitt trigger hysteresis.

0: Gx_IOy Schmitt trigger hysteresis disabled

1: Gx_IOy Schmitt trigger hysteresis enabled

Note: These bits control the I/O Schmitt trigger hysteresis whatever the I/O control mode is (even if controlled by standard GPIO registers).

17.6.6 TSC I/O analog switch control register (TSC_IOASCR)

Address offset: 0x18

Reset value: 0x0000 0000

31	30	29	28	27	26	25	24	23	22	21	20	19	18	17	16
Res.	Res.	Res.	Res.	G7_IO4	G7_IO3	G7_IO2	G7_IO1	G6_IO4	G6_IO3	G6_IO2	G6_IO1	G5_IO4	G5_IO3	G5_IO2	G5_IO1
				rw	rw	rw	rw	rw	rw	rw	rw	rw	rw	rw	rw
15	14	13	12	11	10	9	8	7	6	5	4	3	2	1	0
G4_IO4	G4_IO3	G4_IO2	G4_IO1	G3_IO4	G3_IO3	G3_IO2	G3_IO1	G2_IO4	G2_IO3	G2_IO2	G2_IO1	G1_IO4	G1_IO3	G1_IO2	G1_IO1
rw	rw	rw	rw	rw	rw	rw	rw	rw	rw	rw	rw	rw	rw	rw	rw

Bits 31:28 Reserved, must be kept at reset value.

Bits 27:0 **Gx_IOy**: Gx_IOy analog switch enable

These bits are set and cleared by software to enable/disable the Gx_IOy analog switch.

0: Gx_IOy analog switch disabled (opened)

1: Gx_IOy analog switch enabled (closed)

Note: These bits control the I/O analog switch whatever the I/O control mode is (even if controlled by standard GPIO registers).

17.6.7 TSC I/O sampling control register (TSC_IOSCR)

Address offset: 0x20

Reset value: 0x0000 0000

31	30	29	28	27	26	25	24	23	22	21	20	19	18	17	16
Res.	Res.	Res.	Res.	G7_IO4	G7_IO3	G7_IO2	G7_IO1	G6_IO4	G6_IO3	G6_IO2	G6_IO1	G5_IO4	G5_IO3	G5_IO2	G5_IO1
				rw	rw	rw	rw	rw	rw	rw	rw	rw	rw	rw	rw
15	14	13	12	11	10	9	8	7	6	5	4	3	2	1	0
G4_IO4	G4_IO3	G4_IO2	G4_IO1	G3_IO4	G3_IO3	G3_IO2	G3_IO1	G2_IO4	G2_IO3	G2_IO2	G2_IO1	G1_IO4	G1_IO3	G1_IO2	G1_IO1
rw	rw	rw	rw	rw	rw	rw	rw	rw	rw	rw	rw	rw	rw	rw	rw

Bits 31:28 Reserved, must be kept at reset value.

Bits 27:0 **Gx_IOy**: Gx_IOy sampling mode

These bits are set and cleared by software to configure the Gx_IOy as a sampling capacitor I/O. Only one I/O per analog I/O group must be defined as sampling capacitor.

0: Gx_IOy unused

1: Gx_IOy used as sampling capacitor

Note: These bits must not be modified when an acquisition is ongoing.

During the acquisition phase and even if the TSC peripheral alternate function is not enabled, as soon as the TSC_IOSCR bit is set, the corresponding GPIO analog switch is automatically controlled by the touch sensing controller.

17.6.8 TSC I/O channel control register (TSC_IOCCR)

Address offset: 0x28

Reset value: 0x0000 0000

31	30	29	28	27	26	25	24	23	22	21	20	19	18	17	16
Res.	Res.	Res.	Res.	G7_IO4	G7_IO3	G7_IO2	G7_IO1	G6_IO4	G6_IO3	G6_IO2	G6_IO1	G5_IO4	G5_IO3	G5_IO2	G5_IO1
				rw	rw	rw	rw	rw	rw	rw	rw	rw	rw	rw	rw
15	14	13	12	11	10	9	8	7	6	5	4	3	2	1	0
G4_IO4	G4_IO3	G4_IO2	G4_IO1	G3_IO4	G3_IO3	G3_IO2	G3_IO1	G2_IO4	G2_IO3	G2_IO2	G2_IO1	G1_IO4	G1_IO3	G1_IO2	G1_IO1
rw	rw	rw	rw	rw	rw	rw	rw	rw	rw	rw	rw	rw	rw	rw	rw

Bits 31:28 Reserved, must be kept at reset value.

Bits 27:0 **Gx_IOy**: Gx_IOy channel mode

These bits are set and cleared by software to configure the Gx_IOy as a channel I/O.

0: Gx_IOy unused

1: Gx_IOy used as channel

Note: These bits must not be modified when an acquisition is ongoing.

During the acquisition phase and even if the TSC peripheral alternate function is not enabled, as soon as the TSC_IOCCR bit is set, the corresponding GPIO analog switch is automatically controlled by the touch sensing controller.

17.6.9 TSC I/O group control status register (TSC_IOGCSR)

Address offset: 0x30

Reset value: 0x0000 0000

31	30	29	28	27	26	25	24	23	22	21	20	19	18	17	16
Res.	Res.	Res.	Res.	Res.	Res.	Res.	Res.	Res.	G7S	G6S	G5S	G4S	G3S	G2S	G1S
									r	r	r	r	r	r	r
15	14	13	12	11	10	9	8	7	6	5	4	3	2	1	0
Res.	Res.	Res.	Res.	Res.	Res.	Res.	Res.	Res.	G7E	G6E	G5E	G4E	G3E	G2E	G1E
									rw	rw	rw	rw	rw	rw	rw

Bits 31:23 Reserved, must be kept at reset value.

Bits 22:16 **GxS**: Analog I/O group x status

These bits are set by hardware when the acquisition on the corresponding enabled analog I/O group x is complete. They are cleared by hardware when a new acquisition is started.

0: Acquisition on analog I/O group x is ongoing or not started

1: Acquisition on analog I/O group x is complete

Note: When a max count error is detected the remaining GxS bits of the enabled analog I/O groups are not set.

Bits 15:7 Reserved, must be kept at reset value.

Bits 6:0 **GxE**: Analog I/O group x enable

These bits are set and cleared by software to enable/disable the acquisition (counter is counting) on the corresponding analog I/O group x.

0: Acquisition on analog I/O group x disabled

1: Acquisition on analog I/O group x enabled

17.6.10 TSC I/O group x counter register (TSC_IOGxCR)

x represents the analog I/O group number.

Address offset: 0x30 + 0x04 * x, (x = 1 to 7)

Reset value: 0x0000 0000

31	30	29	28	27	26	25	24	23	22	21	20	19	18	17	16
Res.	Res.	Res.	Res.	Res.	Res.	Res.	Res.	Res.	Res.	Res.	Res.	Res.	Res.	Res.	Res.
15	14	13	12	11	10	9	8	7	6	5	4	3	2	1	0
Res.	Res.	CNT[13:0]													
		r	r	r	r	r	r	r	r	r	r	r	r	r	r

Bits 31:14 Reserved, must be kept at reset value.

Bits 13:0 **CNT[13:0]**: Counter value

These bits represent the number of charge transfer cycles generated on the analog I/O group x to complete its acquisition (voltage across C_S has reached the threshold).

17.6.11 TSC register map

Table 85. TSC register map and reset values

Offset	Register name	31	30	29	28	27	26	25	24	23	22	21	20	19	18	17	16	15	14	13	12	11	10	9	8	7	6	5	4	3	2	1	0
0x0000	TSC_CR	CTPH[3:0]				CTPL[3:0]				SSD[6:0]							SSE	SSPSC	PGPSC[2:0]			Res.	Res.	Res.	Res.	MCV [2:0]			IODEF	SYNCPOL	AM	START	TSCE
	Reset value	0	0	0	0	0	0	0	0	0	0	0	0	0	0	0	0	0	0	0	0					0	0	0	0	0	0	0	0
0x0004	TSC_IER	Res.	Res.	Res.	Res.	Res.	Res.	Res.	Res.	Res.	Res.	Res.	Res.	Res.	Res.	Res.	Res.	Res.	Res.	Res.	Res.	Res.	Res.	Res.	Res.	Res.	Res.	Res.	Res.	Res.	Res.	MCEIE	EOAIE
	Reset value																															0	0
0x0008	TSC_ICR	Res.	Res.	Res.	Res.	Res.	Res.	Res.	Res.	Res.	Res.	Res.	Res.	Res.	Res.	Res.	Res.	Res.	Res.	Res.	Res.	Res.	Res.	Res.	Res.	Res.	Res.	Res.	Res.	Res.	Res.	MCEIC	EOAIC
	Reset value																															0	0
0x000C	TSC_ISR	Res.	Res.	Res.	Res.	Res.	Res.	Res.	Res.	Res.	Res.	Res.	Res.	Res.	Res.	Res.	Res.	Res.	Res.	Res.	Res.	Res.	Res.	Res.	Res.	Res.	Res.	Res.	Res.	Res.	Res.	MCEF	EOAF
	Reset value																															0	0
0x0010	TSC_IOHCR	Res.	Res.	Res.	Res.	G7_IO4	G7_IO3	G7_IO2	G7_IO1	G6_IO4	G6_IO3	G6_IO2	G6_IO1	G5_IO4	G5_IO3	G5_IO2	G5_IO1	G4_IO4	G4_IO3	G4_IO2	G4_IO1	G3_IO4	G3_IO3	G3_IO2	G3_IO1	G2_IO4	G2_IO3	G2_IO2	G2_IO1	G1_IO4	G1_IO3	G1_IO2	G1_IO1
	Reset value					1	1	1	1	1	1	1	1	1	1	1	1	1	1	1	1	1	1	1	1	1	1	1	1	1	1	1	1
0x0014	Reserved																																
0x0018	TSC_IOASCR	Res.	Res.	Res.	Res.	G7_IO4	G7_IO3	G7_IO2	G7_IO1	G6_IO4	G6_IO3	G6_IO2	G6_IO1	G5_IO4	G5_IO3	G5_IO2	G5_IO1	G4_IO4	G4_IO3	G4_IO2	G4_IO1	G3_IO4	G3_IO3	G3_IO2	G3_IO1	G2_IO4	G2_IO3	G2_IO2	G2_IO1	G1_IO4	G1_IO3	G1_IO2	G1_IO1
	Reset value					0	0	0	0	0	0	0	0	0	0	0	0	0	0	0	0	0	0	0	0	0	0	0	0	0	0	0	0
0x001C	Reserved																																
0x0020	TSC_IOSCR	Res.	Res.	Res.	Res.	G7_IO4	G7_IO3	G7_IO2	G7_IO1	G6_IO4	G6_IO3	G6_IO2	G6_IO1	G5_IO4	G5_IO3	G5_IO2	G5_IO1	G4_IO4	G4_IO3	G4_IO2	G4_IO1	G3_IO4	G3_IO3	G3_IO2	G3_IO1	G2_IO4	G2_IO3	G2_IO2	G2_IO1	G1_IO4	G1_IO3	G1_IO2	G1_IO1
	Reset value					0	0	0	0	0	0	0	0	0	0	0	0	0	0	0	0	0	0	0	0	0	0	0	0	0	0	0	0
0x0024	Reserved																																
0x0028	TSC_IOCCR	Res.	Res.	Res.	Res.	G7_IO4	G7_IO3	G7_IO2	G7_IO1	G6_IO4	G6_IO3	G6_IO2	G6_IO1	G5_IO4	G5_IO3	G5_IO2	G5_IO1	G4_IO4	G4_IO3	G4_IO2	G4_IO1	G3_IO4	G3_IO3	G3_IO2	G3_IO1	G2_IO4	G2_IO3	G2_IO2	G2_IO1	G1_IO4	G1_IO3	G1_IO2	G1_IO1
	Reset value					0	0	0	0	0	0	0	0	0	0	0	0	0	0	0	0	0	0	0	0	0	0	0	0	0	0	0	0
0x002C	Reserved																																
0x0030	TSC_IOGCSR	Res.	Res.	Res.	Res.	Res.	Res.	Res.	Res.	Res.	G7S	G6S	G5S	G4S	G3S	G2S	G1S	Res.	Res.	Res.	Res.	Res.	Res.	Res.	Res.	Res.	G7E	G6E	G5E	G4E	G3E	G2E	G1E
	Reset value										0	0	0	0	0	0	0										0	0	0	0	0	0	0
0x0034	TSC_IOG1CR	Res.	Res.	Res.	Res.	Res.	Res.	Res.	Res.	Res.	Res.	Res.	Res.	Res.	Res.	Res.	Res.	Res.	Res.	CNT[13:0]													
	Reset value																			0	0	0	0	0	0	0	0	0	0	0	0	0	0
0x0038	TSC_IOG2CR	Res.	Res.	Res.	Res.	Res.	Res.	Res.	Res.	Res.	Res.	Res.	Res.	Res.	Res.	Res.	Res.	Res.	Res.	CNT[13:0]													
	Reset value																			0	0	0	0	0	0	0	0	0	0	0	0	0	0

Table 85. TSC register map and reset values (continued)

Offset	Register name	31	30	29	28	27	26	25	24	23	22	21	20	19	18	17	16	15	14	13	12	11	10	9	8	7	6	5	4	3	2	1	0
0x003C	TSC_IOG3CR	Res.	Res.	Res.	Res.	Res.	Res.	Res.	Res.	Res.	Res.	Res.	Res.	Res.	Res.	Res.	Res.	Res.	Res.	CNT[13:0]													
	Reset value																			0	0	0	0	0	0	0	0	0	0	0	0	0	0
0x0040	TSC_IOG4CR	Res.	Res.	Res.	Res.	Res.	Res.	Res.	Res.	Res.	Res.	Res.	Res.	Res.	Res.	Res.	Res.	Res.	Res.	CNT[13:0]													
	Reset value																			0	0	0	0	0	0	0	0	0	0	0	0	0	0
0x0044	TSC_IOG5CR	Res.	Res.	Res.	Res.	Res.	Res.	Res.	Res.	Res.	Res.	Res.	Res.	Res.	Res.	Res.	Res.	Res.	Res.	CNT[13:0]													
	Reset value																			0	0	0	0	0	0	0	0	0	0	0	0	0	0
0x0048	TSC_IOG6CR	Res.	Res.	Res.	Res.	Res.	Res.	Res.	Res.	Res.	Res.	Res.	Res.	Res.	Res.	Res.	Res.	Res.	Res.	CNT[13:0]													
	Reset value																			0	0	0	0	0	0	0	0	0	0	0	0	0	0
0x004C	TSC_IOG7CR	Res.	Res.	Res.	Res.	Res.	Res.	Res.	Res.	Res.	Res.	Res.	Res.	Res.	Res.	Res.	Res.	Res.	Res.	CNT[13:0]													
	Reset value																			0	0	0	0	0	0	0	0	0	0	0	0	0	0

Refer to *Section 2.2: Memory organization* for the register boundary addresses.

18 True random number generator (RNG)

18.1 Introduction

The RNG is a true random number generator that provides full entropy outputs to the application as 32-bit samples. It is composed of a live entropy source (analog) and an internal conditioning component.

The RNG can be used to construct a NIST compliant deterministic random bit generator (DRBG), acting as a live entropy source.

The RNG true random number generator has been tested using the German BSI statistical tests of AIS-31 (T0 to T8).

18.2 RNG main features

- The RNG delivers 32-bit true random numbers, produced by an analog entropy source processed by a high quality conditioning stage.
- In the NIST configuration, it produces four 32-bit random samples every 16x $\frac{f_{AHB}}{f_{RNG}}$ AHB clock cycles, if value is higher than 213 cycles (213 cycles otherwise).
- It allows embedded continuous basic health tests with associated error management
  - Includes too low sampling clock detection and repetition count tests.
- It can be disabled to reduce power consumption.
- It has an AMBA® AHB slave peripheral, accessible through 32-bit word single accesses only (else an AHB bus error is generated, and the write accesses are ignored).

18.3 RNG functional description

18.3.1 RNG block diagram

Figure 65 shows the RNG block diagram.

Figure 65. RNG block diagram

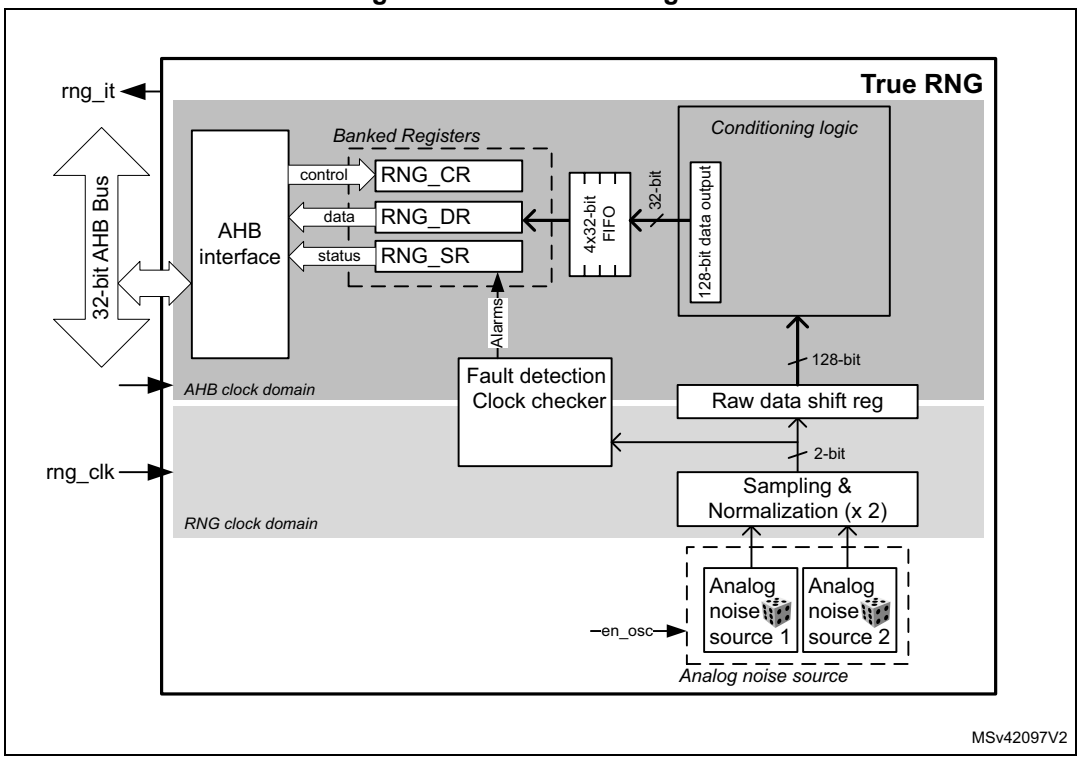

18.3.2 RNG internal signals

Table 86 describes a list of useful-to-know internal signals available at the RNG level, not at the STM32 product level (on pads).

Table 86. RNG internal input/output signals

Signal name	Signal type	Description
rng_it	Digital output	RNG global interrupt request
rng_hclk	Digital input	AHB clock
rng_clk	Digital input	RNG dedicated clock, asynchronous to rng_hclk

18.3.3 Random number generation

The true random number generator (RNG) delivers truly random data through its AHB interface at deterministic intervals. Within its boundary the RNG implements the entropy source model pictured on *Figure 66*.

It includes an analog noise source, a digitization stage with post-processing, a conditioning algorithm, a health monitoring block and two interfaces that are used to interact with the entropy source: GetEntropy and HealthTest.

Figure 66. Entropy source model

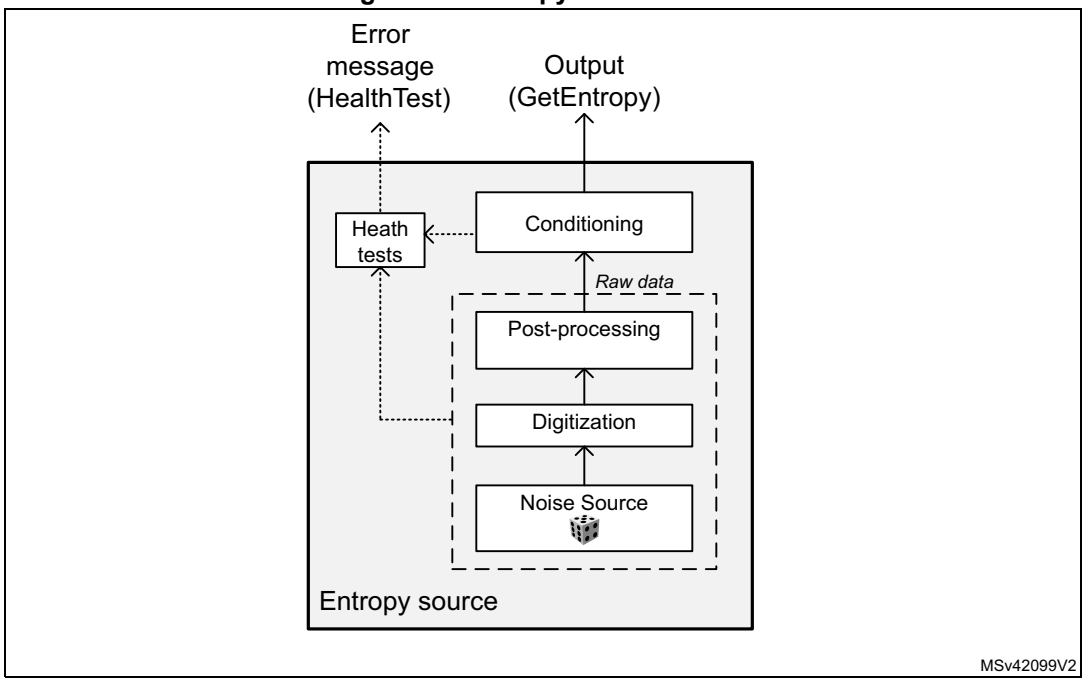

The components pictured above are detailed hereafter.

Noise source

The noise source is the component that contains the non-deterministic, entropy-providing activity that is ultimately responsible for the uncertainty associated with the bitstring output by the entropy source. It is composed of:

- Two analog noise sources, each based on three XORed free-running ring oscillator outputs. It is possible to disable those analog oscillators to save power, as described in *Section 18.3.8*.
- A sampling stage of these outputs clocked by a dedicated clock input (rng_clk), delivering a 2-bit raw data output.

This noise source sampling is independent to the AHB interface clock frequency (rng_hclk).

Note: In Section 18.6 the recommended RNG clock frequencies are given.

Post processing

The sample values obtained from a true random noise source consist of 2-bit bitstrings. Because this noise source output is biased, the RNG implements a post-processing component that reduces that bias to a tolerable level.

More specifically, for each of the two noise source bits the RNG takes half of the bits from the sampled noise source, and half of the bits from the inverted sampled noise source. Thus, if the source generates more ‘1’ than ‘0’ (or the opposite), it is filtered.

Conditioning

The conditioning component in the RNG is a deterministic function that increases the entropy rate of the resulting fixed-length bitstrings output (128-bit).

Also note that post-processing computations are triggered when at least 32 bits of raw datum is received and when output FIFO needs a refill. Thus, the RNG output entropy is maximum when the RNG 128-bit FIFO is emptied by application after 64 RNG clock cycles.

The times required between two random number generations, and between the RNG initialization and availability of first sample are described in *Section 18.5*.

The conditioning component is clocked by the faster AHB clock.

Output buffer

A data output buffer can store up to four 32-bit words, which have been output from the conditioning component. When four words have been read from the output FIFO through the RNG_DR register, the content of the 128-bit conditioning output register is pushed into the output FIFO, and a new conditioning round is automatically started. Four new words are added to the conditioning output register 213 AHB clock cycles later.

Whenever a random number is available through the RNG_DR register, the DRDY flag changes from 0 to 1. This flag remains high until the output buffer becomes empty after reading four words from the RNG_DR register.

Note: When interrupts are enabled an interrupt is generated when this data ready flag transitions from 0 to 1. Interrupt is then cleared automatically by the RNG as explained above.

Health checks

This component ensures that the entire entropy source (with its noise source) starts then operates as expected, obtaining assurance that failures are caught quickly and with a high probability and reliability.

The RNG implements the following health check features.

1. Continuous health tests, running indefinitely on the output of the noise source
   - Repetition count test, flagging an error when:
     - a) One of the noise source has provided more than 64 consecutive bits at a constant value (“0” or “1”), or more than 32 consecutive occurrence of two bits patterns (“01” or “10”)
     - b) Both noise sources have delivered more than 32 consecutive bits at a constant value (“0” or “1”), or more than 16 consecutive occurrence of two bits patterns (“01” or “10”)
2. Vendor specific continuous test
   - Real-time “too slow” sampling clock detector, flagging an error when one RNG clock cycle is smaller than AHB clock cycle divided by 32.

The CECS and SECS status bits in the RNG_SR register indicate when an error condition is detected, as detailed in *Section 18.3.7*.

Note: An interrupt can be generated when an error is detected.

18.3.4 RNG initialization

The RNG simplified state machine is pictured on *Figure 67*.

After enabling the RNG (RNGEN = 1 in RNG_CR), the following chain of events occurs:

1. The analog noise source is enabled, and logic immediately starts sampling the analog output, filling the 128-bit conditioning shift register.
2. The conditioning logic is enabled and the post-processing context is initialized using two 128 noise source bits.
3. The conditioning stage internal input data buffer is filled again with 128-bit and one conditioning round is performed. The output buffer is then filled with the post processing result.
4. The output buffer is refilled automatically according to the RNG usage.

The associated initialization time can be found in *Section 18.5*.

Figure 67. RNG initialization overview

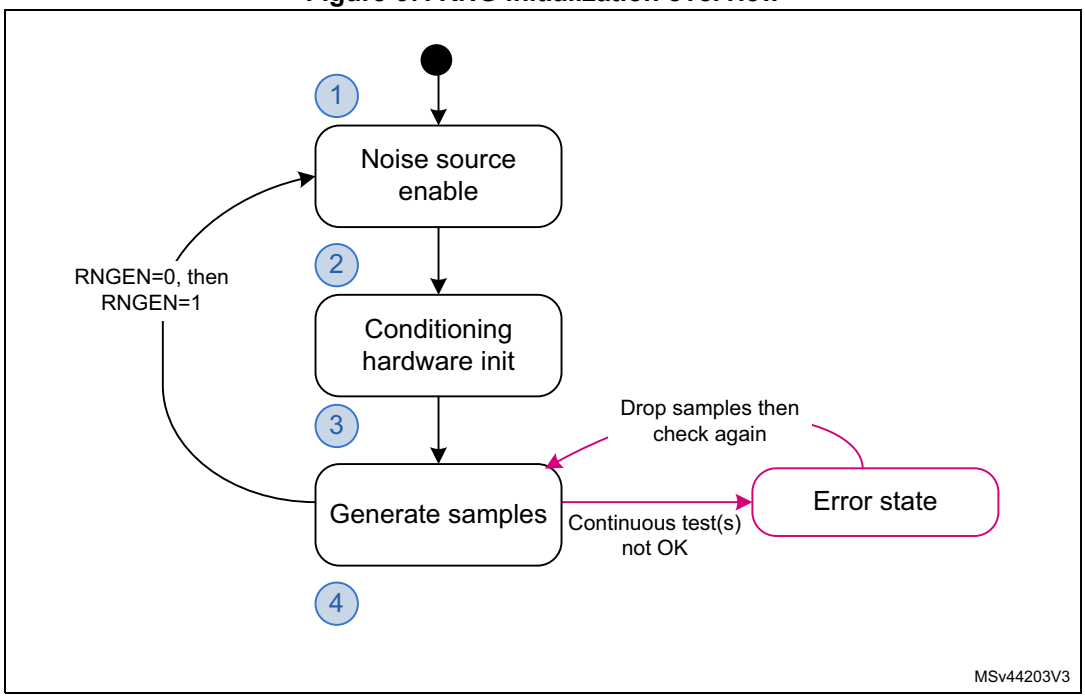

18.3.5 RNG operation

Normal operation

To run the RNG using interrupts, the following steps are recommended:

1. Enable the interrupts by setting the IE bit in the RNG_CR register. At the same time, enable the RNG by setting the bit RNGEN=1.
2. An interrupt is now generated when a random number is ready or when an error occurs. Therefore, at each interrupt, check that:
   - No error occurred. The SEIS and CEIS bits must be set to 0 in the RNG_SR register.
   - A random number is ready. The DRDY bit must be set to 1 in the RNG_SR register.
   - If the above two conditions are true the content of the RNG_DR register can be read up to four consecutive times. If valid data is available in the conditioning output buffer, four additional words can be read by the application (in this case the DRDY bit is still high). If one or both of the above conditions are false, the RNG_DR register must not be read. If an error occurred, the error recovery sequence described in *Section 18.3.7* must be used.

To run the RNG in polling mode following steps are recommended:

1. Enable the random number generation by setting the RNGEN bit to “1” in the RNG_CR register.
2. Read the RNG_SR register and check that:
   - No error occurred (the SEIS and CEIS bits must be set to 0)
   - A random number is ready (the DRDY bit must be set to 1)
3. If above conditions are true read the content of the RNG_DR register up to four consecutive times. If valid data is available in the conditioning output buffer four additional words can be read by the application (in this case the DRDY bit is still high). If one or both of the above conditions are false, the RNG_DR register must not be read. If an error occurred, the error recovery sequence described in *Section 18.3.7* must be used.

Note: When data is not ready (DRDY = 0) RNG_DR returns zero.
It is recommended to always verify that RNG_DR is different from zero. Because when it is the case a seed error occurred between RNG_SR polling and RND_DR output reading (rare event).

Low-power operation

If the power consumption is a concern to the application, low-power strategies can be used, as described in *Section 18.3.8*.

Software post-processing

If a NIST approved DRBG with 128 bits of security strength is required an approved random generator software must be built around the RNG true random number generator.

Built-in health check functions are described in *Section 18.3.3: Random number generation*.

18.3.6 RNG clocking

The RNG runs on two different clocks: the AHB bus clock and a dedicated RNG clock.

The AHB clock is used to clock the AHB banked registers and conditioning component. The RNG clock is used for noise source sampling. Recommended clock configurations are detailed in *Section 18.6: RNG entropy source validation*.

*Note: When the CED bit in the RNG_CR register is set to 0, the RNG clock frequency the **must be higher** than the AHB clock frequency divided by 32, otherwise the clock checker always flags a clock error (CECS = 1 in the RNG_SR register).*

See *Section 18.3.1: RNG block diagram* for details (AHB and RNG clock domains).

18.3.7 Error management

In parallel to random number generation a health check block verifies the correct noise source behavior and the frequency of the RNG source clock as detailed in this section. Associated error state is also described.

Clock error detection

When the clock error detection is enabled (CED = 0) and if the RNG clock frequency is too low, the RNG sets to 1 both the CEIS and CECS bits to indicate that a clock error occurred. In this case, the application must check that the RNG clock is configured correctly (see *Section 18.3.6: RNG clocking*) and then it must clear the CEIS bit interrupt flag. The CECS bit is automatically cleared when the clocking condition is normal.

Note: The clock error has no impact on generated random numbers that is the application can still read the RNG_DR register.

CEIS is set only when CECS is set to 1 by RNG.

Noise source error detection

When a noise source (or seed) error occurs, the RNG stops generating random numbers and sets to 1 both SEIS and SECS bits to indicate that a seed error occurred. If a value is available in the RNG_DR register, it must not be used as it may not have enough entropy. If the error was detected during the initialization phase the whole initialization sequence is automatically restarted by the RNG.

The following sequence must be used to fully recover from a seed error after the RNG initialization:

1. Clear the SEIS bit by writing it to “0”.
2. Read out 12 words from the RNG_DR register, and discard each of them in order to clean the pipeline.
3. Confirm that SEIS is still cleared. Random number generation is back to normal.

18.3.8 RNG low-power use

If power consumption is a concern, the RNG can be disabled as soon as the DRDY bit is set to 1 by setting the RNGEN bit to 0 in the RNG_CR register. As the post-processing logic and the output buffer remain operational while RNGEN = 0 following features are available to the software:

- If there are valid words in the output buffer four random numbers can still be read from the RNG_DR register.
- If there are valid bits in the conditioning output internal register four additional random numbers can be still be read from the RNG_DR register. If it is not the case the RNG must be re-enabled by the application until at least 32 new bits are collected from the noise source and a complete conditioning round is done. It corresponds to 16 RNG clock cycles to sample new bits, and 216 AHB clock cycles to run a conditioning round.

When disabling the RNG the user deactivates all the analog seed generators, whose power consumption is given in the datasheet electrical characteristics section. The user also gates all the logic clocked by the RNG clock. Note that this strategy is adding latency before a random sample is available on the RNG_DR register, because of the RNG initialization time.

If the RNG block is disabled during initialization (that is well before the DRDY bit rises for the first time), the initialization sequence resumes from where it was stopped when RNGEN bit is set to 1.

18.4 RNG interrupts

In the RNG an interrupt can be produced on the following events:

- Data ready flag
- Seed error, see *Section 18.3.7: Error management*
- Clock error, see *Section 18.3.7: Error management*

Dedicated interrupt enable control bits are available as shown in *Table 87*.

Table 87. RNG interrupt requests

Interrupt acronym	Interrupt event	Event flag	Enable control bit	Interrupt clear method
RNG	Data ready flag	DRDY	IE	None (automatic)
	Seed error flag	SEIS	IE	Write 0 to SEIS.
	Clock error flag	CEIS	IE	Write 0 to CEIS

The user can enable or disable the above interrupt sources individually by changing the mask bits or the general interrupt control bit IE in the RNG_CR register. The status of the individual interrupt sources can be read from the RNG_SR register.

Note: Interrupts are generated only when RNG is enabled.

18.5 RNG processing time

The conditioning stage can produce four 32-bit random numbers every 16x $\frac{f_{AHB}}{f_{RNG}}$ clock cycles, if the value is higher than 213 cycles (213 cycles otherwise).
More time is needed for the first set of random numbers after the device exits reset (see

Section 18.3.4: RNG initialization). Indeed, after enabling the RNG for the first time, random data is first available after either:

- 128 RNG clock cycles + 426 AHB cycles, if $f_{AHB} < f_{threshold}$
- 192 RNG clock cycles + 213 AHB cycles, if $f_{AHB} \geq f_{threshold}$

With $f_{threshold} = (213 \times f_{RNG})/ 64$

18.6 RNG entropy source validation

18.6.1 Introduction

In order to assess the amount of entropy available from the RNG, STMicroelectronics has tested the peripheral using the German BSI AIS-31 statistical tests (T0 to T8).

18.6.2 Validation conditions

STMicroelectronics has tested the RNG true random number generator in the following conditions:

- RNG clock rng_clk= 48 MHz (CED bit = ‘0’ in RNG_CR register) and rng_clk = 400 kHz (CED bit = ‘1’ in RNG_CR register).

Table 88. RNG configurations

Configuration	RNG_CR bits						Loop number (N)	RNG_ HTCR register	RNG_ NSCR register
	NISTC bit	RNG_ CONFIG1 [5:0]	CLKDIV [3:0]	RNG_ CONFIG2 [2:0](1)	RNG_ CONFIG3 [3:0](2)	CED bit			
A	Refer to *NIST compliant RNG configuration* table in AN4230 available from *www.st.com*. This application note also indicates if this configuration is part of an existing NIST SP800-90B Entropy Certificate listed on *https://csrc.nist.gov/projects/cryptographic-module-validation-program*.								
B	1	0x18	0x0(3)	0x0	0x0	0	1	0x0000 NA(4)	default
C	0	0x0F		0x0	0xD	0	2		default

1. 0x1 value is recommended instead of 0x0 for RNG_CONFIG2[2:0], when RNG power consumption is critical. See the end of *Section 18.3.8* for details.
2. RNG_CONFIG3[1:0] defines the loop number N: 0x0 corresponds to N=1, 0x1 to N=2, 0x2 to N=3, 0x3 to N=4
3. The noise source sampling must be NA or less. Hence, if the RNG clock is different from NA, this value of CLKDIV must be adapted. See the CLKDIV bitfield description in *Section 18.7.1* for details.
4. This value can be fixed in the RNG driver (it does not depend upon the STM32 product).

For details on data collection and the running of statistical test suites refer to AN4230 “*STM32 microcontrollers random number generation validation using NIST statistical test suite*” available from *www.st.com*.

In bypass mode the bits [31:30] of the fourth word are always stuck at 0. Hence the continuous capture of samples is started from the fifth word.

18.7 RNG registers

The RNG is associated with a control register, a data register and a status register.

18.7.1 RNG control register (RNG_CR)

Address offset: 0x000

Reset value: 0x0000 0000

31	30	29	28	27	26	25	24	23	22	21	20	19	18	17	16
Res.	Res.	Res.	Res.	Res.	Res.	Res.	Res.	Res.	Res.	Res.	Res.	Res.	Res.	Res.	Res.

15	14	13	12	11	10	9	8	7	6	5	4	3	2	1	0
Res.	Res.	Res.	Res.	Res.	Res.	Res.	Res.	Res.	Res.	CED	Res.	IE	RNGEN	Res.	Res.
										rw		rw	rw		

Bits 31:6 Reserved, must be kept at reset value.

Bit 5 **CED:** Clock error detection

0: Clock error detection enabled

1: Clock error detection is disabled

The clock error detection cannot be enabled nor disabled on-the-fly when the RNG is enabled, that is to enable or disable CED, the RNG must be disabled.

Bit 4 Reserved, must be kept at reset value.

Bit 3 **IE:** Interrupt enable

0: RNG interrupt is disabled

1: RNG interrupt is enabled. An interrupt is pending as soon as the DRDY, SEIS, or CEIS is set in the RNG_SR register.

Bit 2 **RNGEN:** True random number generator enable

0: True random number generator is disabled. Analog noise sources are powered off and logic clocked by the RNG clock is gated.

1: True random number generator is enabled.

Bits 1:0 Reserved, must be kept at reset value.

18.7.2 RNG status register (RNG_SR)

Address offset: 0x004

Reset value: 0x0000 0000

31	30	29	28	27	26	25	24	23	22	21	20	19	18	17	16
Res.	Res.	Res.	Res.	Res.	Res.	Res.	Res.	Res.	Res.	Res.	Res.	Res.	Res.	Res.	Res.

15	14	13	12	11	10	9	8	7	6	5	4	3	2	1	0
Res.	Res.	Res.	Res.	Res.	Res.	Res.	Res.	Res.	SEIS	CEIS	Res.	Res.	SECS	CECS	DRDY
									rc_w0	rc_w0			r	r	r

Bits 31:7 Reserved, must be kept at reset value.

Bit 6 **SEIS:** Seed error interrupt status

This bit is set at the same time as SECS. It is cleared by writing 0. Writing 1 has no effect.
0: No faulty sequence detected
1: At least one faulty sequence is detected. See SECS bit description for details.
An interrupt is pending if IE = 1 in the RNG_CR register.

Bit 5 **CEIS:** Clock error interrupt status

This bit is set at the same time as CECS. It is cleared by writing 0. Writing 1 has no effect.
0: The RNG clock is correct ($f_{RNGCLK} > f_{HCLK}/32$)
1: The RNG is detected too slow ($f_{RNGCLK} < f_{HCLK}/32$)
An interrupt is pending if IE = 1 in the RNG_CR register.

Bits 4:3 Reserved, must be kept at reset value.

Bit 2 **SECS:** Seed error current status

0: No faulty sequence has currently been detected. If the SEIS bit is set, this means that a faulty sequence was detected and the situation has been recovered.
1: At least one of the following faulty sequences has been detected:

- One of the noise sources has provided more than 64 consecutive bits at a constant value (“0” or “1”), or more than 32 consecutive occurrence of two bit patterns (“01” or “10”)
- Both noise sources have delivered more than 32 consecutive bits at a constant value (“0” or “1”), or more than 16 consecutive occurrence of two bit patterns (“01” or “10”)

Bit 1 **CECS:** Clock error current status

0: The RNG clock is correct ($f_{RNGCLK} > f_{HCLK}/32$). If the CEIS bit is set, this means that a slow clock was detected and the situation has been recovered.
1: The RNG clock is too slow ($f_{RNGCLK} < f_{HCLK}/32$).

Note: CECS bit is valid only if the CED bit in the RNG_CR register is set to 0.

Bit 0 **DRDY:** Data ready

0: The RNG_DR register is not yet valid, no random data is available.
1: The RNG_DR register contains valid random data.
Once the output buffer becomes empty (after reading the RNG_DR register), this bit returns to 0 until a new random value is generated.

Note: The DRDY bit can rise when the peripheral is disabled (RNGEN = 0 in the RNG_CR register).

If IE=1 in the RNG_CR register, an interrupt is generated when DRDY = 1.

18.7.3 RNG data register (RNG_DR)

Address offset: 0x008

Reset value: 0x0000 0000

The RNG_DR register is a read-only register that delivers a 32-bit random value when read. After being read, this register delivers a new random value after 216 periods of AHB clock if the output FIFO is empty.

The content of this register is valid when the DRDY = 1 and the value is not 0x0, even if RNGEN = 0.

31	30	29	28	27	26	25	24	23	22	21	20	19	18	17	16
RNDATA[31:16]															
r	r	r	r	r	r	r	r	r	r	r	r	r	r	r	r
15	14	13	12	11	10	9	8	7	6	5	4	3	2	1	0
RNDATA[15:0]															
r	r	r	r	r	r	r	r	r	r	r	r	r	r	r	r

Bits 31:0 **RNDATA[31:0]:** Random data

32-bit random data, which are valid when DRDY = 1. When DRDY = 0, the RNDATA value is zero.

When DRDY is set, it is recommended to always verify that RNG_DR is different from zero. The zero value means that a seed error occurred between RNG_SR polling and RND_DR output reading (a rare event).

18.7.4 RNG register map

Table 89. RNG register map and reset map

Offset	Register name	31	30	29	28	27	26	25	24	23	22	21	20	19	18	17	16	15	14	13	12	11	10	9	8	7	6	5	4	3	2	1	0
0x000	RNG_CR	Res.	Res.	Res.	Res.	Res.	Res.	Res.	Res.	Res.	Res.	Res.	Res.	Res.	Res.	Res.	Res.	Res.	Res.	Res.	Res.	Res.	Res.	Res.	Res.	Res.	Res.	CED	Res.	IE	RNGEN	Res.	Res.
	Reset value																											0		0	0		
0x004	RNG_SR	Res.	Res.	Res.	Res.	Res.	Res.	Res.	Res.	Res.	Res.	Res.	Res.	Res.	Res.	Res.	Res.	Res.	Res.	Res.	Res.	Res.	Res.	Res.	Res.	Res.	SEIS	CEIS	Res.	Res.	SECS	CECS	DRDY
	Reset value																										0	0			0	0	0
0x008	RNG_DR	RNDATA[31:0]																															
	Reset value	0	0	0	0	0	0	0	0	0	0	0	0	0	0	0	0	0	0	0	0	0	0	0	0	0	0	0	0	0	0	0	0

Refer to *Section 2.2: Memory organization* for the register boundary addresses.

19 AES hardware accelerator (AES)

19.1 Introduction

The AES hardware accelerator (AES) encrypts or decrypts data, using an algorithm and implementation fully compliant with the advanced encryption standard (AES) defined in Federal information processing standards (FIPS) publication 197.

The peripheral supports CTR, GCM, GMAC, CCM, ECB, and CBC chaining modes for key sizes of 128 or 256 bits.

AES is an AMBA AHB slave peripheral accessible through 32-bit single accesses only. Other access types generate an AHB error, and other than 32-bit writes may corrupt the register content.

The peripheral supports DMA single transfers for incoming and outgoing data (two DMA channels required).

19.2 AES main features

- Compliance with NIST *"Advanced encryption standard (AES)*, *FIPS publication 197*" from November 2001
- 128-bit data block processing
- Support for cipher key lengths of 128-bit and 256-bit
- Encryption and decryption with multiple chaining modes:
  - Electronic codebook (ECB) mode
  - Cipher block chaining (CBC) mode
  - Counter (CTR) mode
  - Galois counter mode (GCM)
  - Galois message authentication code (GMAC) mode
  - Counter with CBC-MAC (CCM) mode
- 51 or 75 clock cycle latency in ECB mode for processing one 128-bit block of data with, respectively, 128-bit or 256-bit key
- Integrated round key scheduler to compute the last round key for ECB/CBC decryption
- AMBA AHB slave peripheral, accessible through 32-bit word single accesses only
- 256-bit register for storing the cryptographic key (eight 32-bit registers)
- 128-bit register for storing initialization vector (four 32-bit registers)
- 32-bit buffer for data input and output
- Automatic data flow control with support of single-transfer direct memory access (DMA) using two channels (one for incoming data, one for processed data)
- Data-swapping logic to support 1-, 8-, 16- or 32-bit data
- Possibility for software to suspend a message if AES needs to process another message with a higher priority, then resume the original message

19.3 AES implementation

The devices have one AES peripheral.

19.4 AES functional description

19.4.1 AES block diagram

Figure 68 shows the block diagram of AES.

Figure 68. AES block diagram

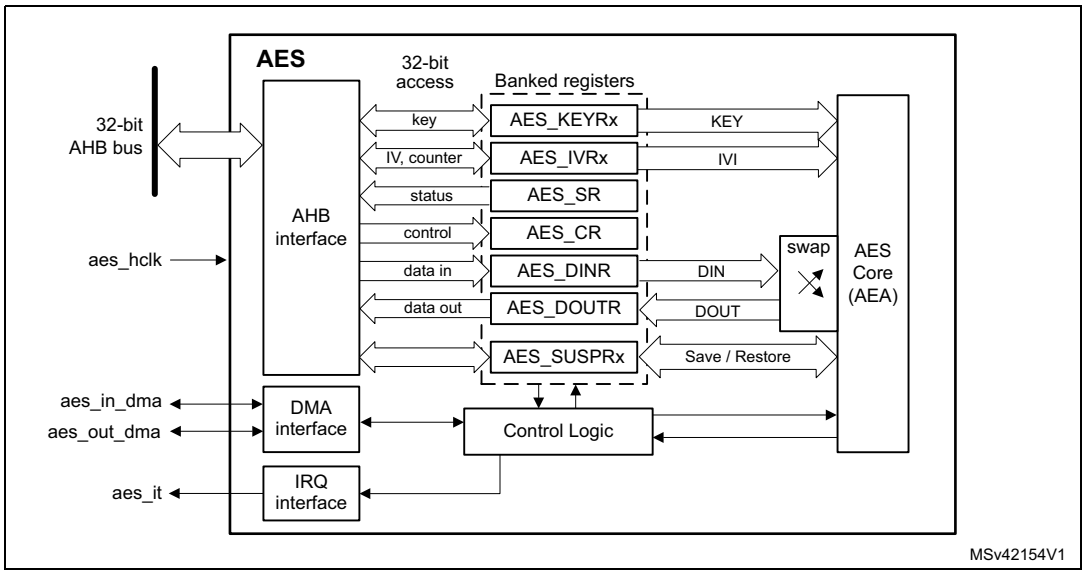

19.4.2 AES internal signals

Table 90 describes the user relevant internal signals interfacing the AES peripheral.

Table 90. AES internal input/output signals

Signal name	Signal type	Description
aes_hclk	Input	AHB bus clock
aes_it	Output	AES interrupt request
aes_in_dma	Input/Output	Input DMA single request/acknowledge
aes_out_dma	Input/Output	Output DMA single request/acknowledge

19.4.3 AES cryptographic core

Overview

The AES cryptographic core consists of the following components:

- AES core algorithm (AEA)
- multiplier over a binary Galois field (GF2mul)
- key input
- initialization vector (IV) input
- chaining algorithm logic (XOR, feedback/counter, mask)

The AES core works on 128-bit data blocks (four words) with 128-bit or 256-bit key length. Depending on the chaining mode, the AES requires zero or one 128-bit initialization vector IV.

The AES features the following modes of operation:

- **Mode 1:**

  Plaintext encryption using a key stored in the AES_KEYRx registers
- **Mode 2:**

  ECB or CBC decryption key preparation. It must be used prior to selecting Mode 3 with ECB or CBC chaining modes. The key prepared for decryption is stored automatically in the AES_KEYRx registers. Now the AES peripheral is ready to switch to Mode 3 for executing data decryption.
- **Mode 3:**

  Ciphertext decryption using a key stored in the AES_KEYRx registers. When ECB and CBC chaining modes are selected, the key must be prepared beforehand, through Mode 2.
- **Mode 4:**

  ECB or CBC ciphertext single decryption using the key stored in the AES_KEYRx registers (the initial key is derived automatically).

Note: Mode 2 and mode 4 are only used when performing ECB and CBC decryption.

When Mode 4 is selected only one decryption can be done, therefore usage of Mode 2 and Mode 3 is recommended instead.

The operating mode is selected by programming the MODE[1:0] bitfield of the AES_CR register. It may be done only when the AES peripheral is disabled.

Typical data processing

Typical usage of the AES is described in *Section 19.4.4: AES procedure to perform a cipher operation on page 453*.

Note: The outputs of the intermediate AEA stages are never revealed outside the cryptographic boundary, with the exclusion of the IVI bitfield.

Chaining modes

The following chaining modes are supported by AES, selected through the CHMOD[2:0] bitfield of the AES_CR register:

- Electronic code book (ECB)
- Cipher block chaining (CBC)
- Counter (CTR)
- Galois counter mode (GCM)
- Galois message authentication code (GMAC)
- Counter with CBC-MAC (CCM)

Note: The chaining mode may be changed only when AES is disabled (bit EN of the AES_CR register cleared).

Principle of each AES chaining mode is provided in the following subsections.

Detailed information is in dedicated sections, starting from *Section 19.4.8: AES basic chaining modes (ECB, CBC)*.

Electronic codebook (ECB) mode

Figure 69. ECB encryption and decryption principle

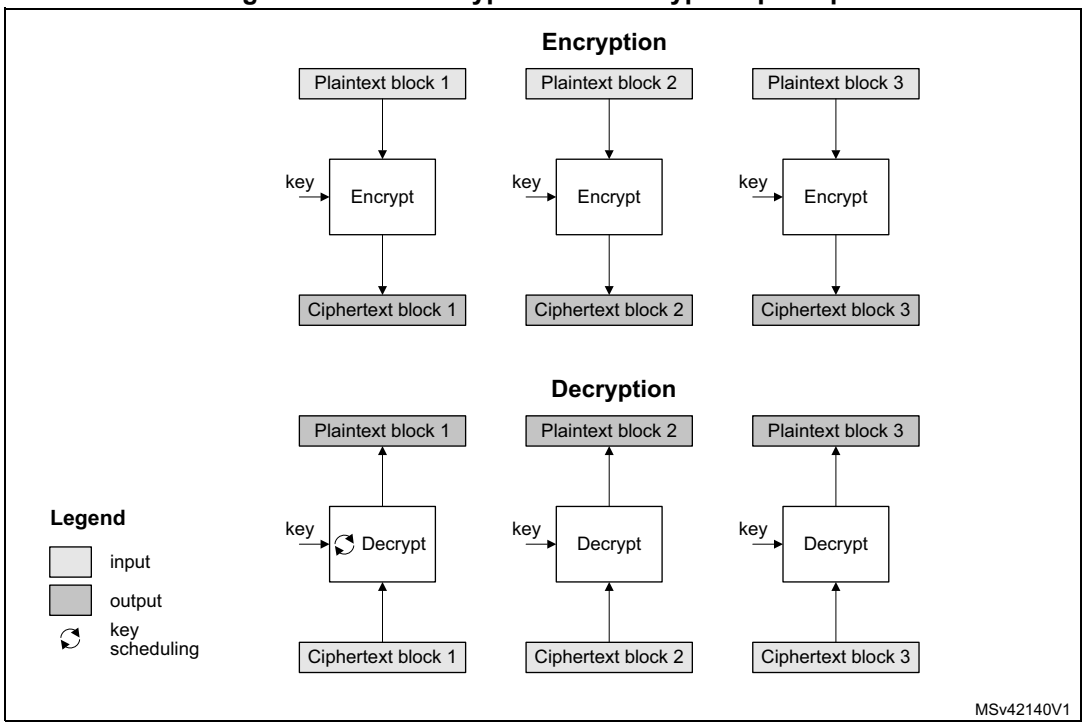

ECB is the simplest mode of operation. There are no chaining operations, and no special initialization stage. The message is divided into blocks and each block is encrypted or decrypted separately.

Note: For decryption, a special key scheduling is required before processing the first block.

Cipher block chaining (CBC) mode

Figure 70. CBC encryption and decryption principle

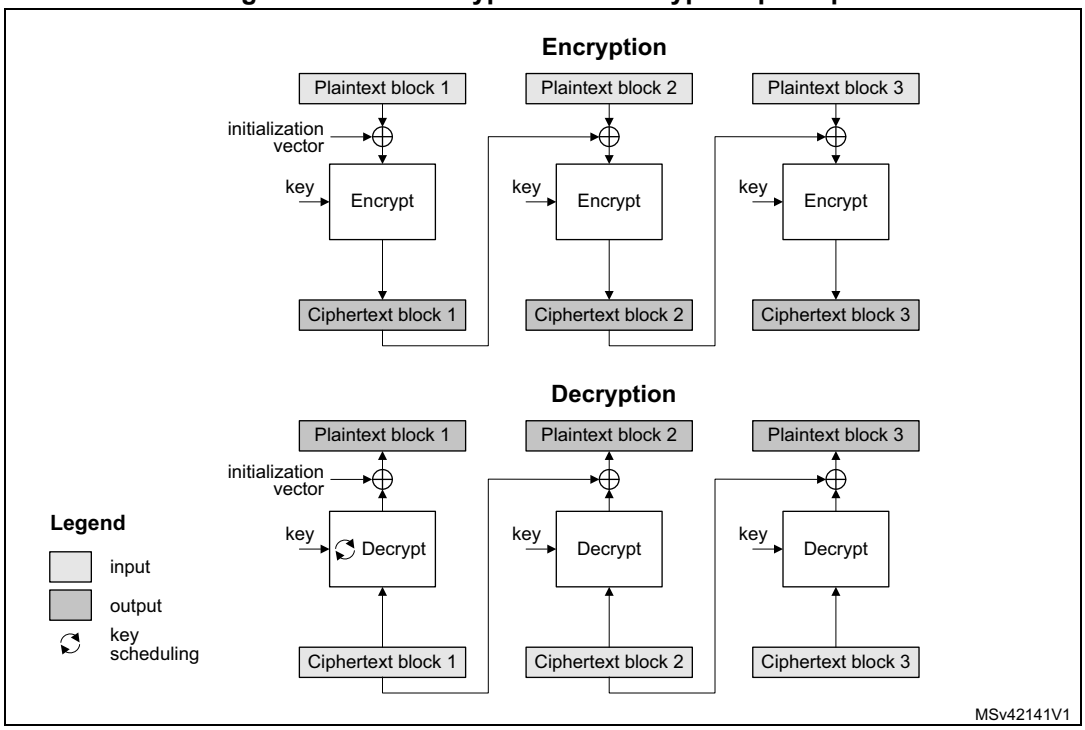

In CBC mode the output of each block chains with the input of the following block. To make each message unique, an initialization vector is used during the first block processing.

Note: For decryption, a special key scheduling is required before processing the first block.

Counter (CTR) mode

Figure 71. CTR encryption and decryption principle

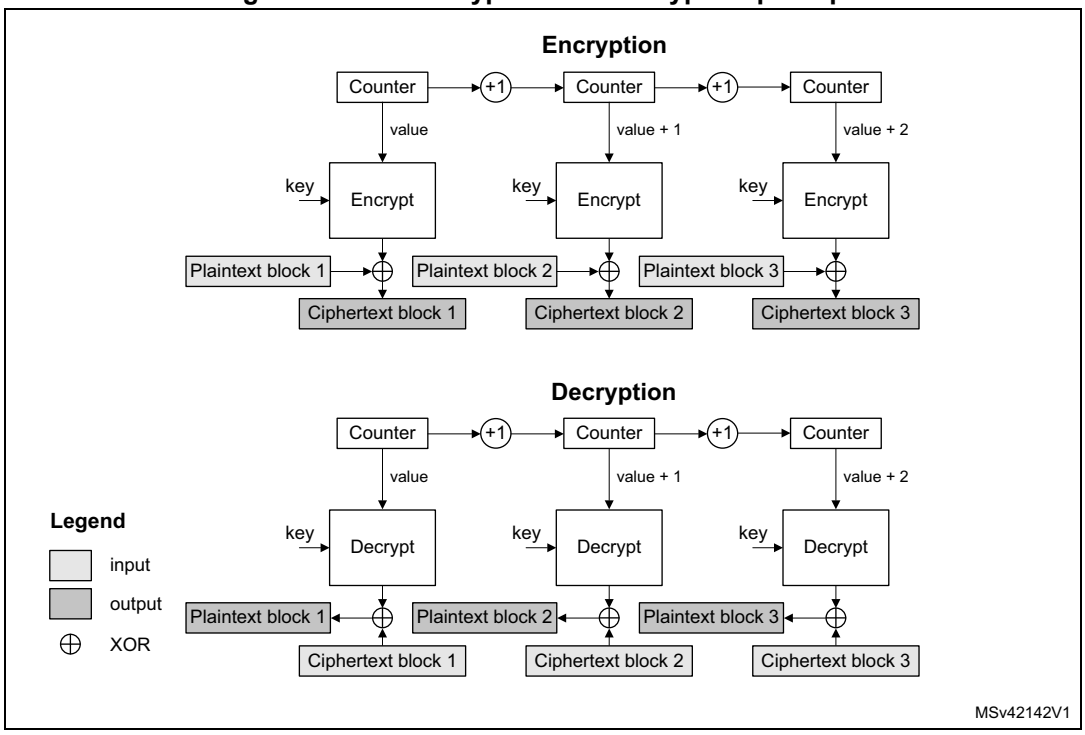

The CTR mode uses the AES core to generate a key stream. The keys are then XOR-ed with the plaintext to obtain the ciphertext as specified in NIST *Special Publication 800-38A, Recommendation for Block Cipher Modes of Operation*.

Note: Unlike with ECB and CBC modes, no key scheduling is required for the CTR decryption, since in this chaining scheme the AES core is always used in encryption mode for producing the key stream, or counter blocks.

Galois/counter mode (GCM)

Figure 72. GCM encryption and authentication principle

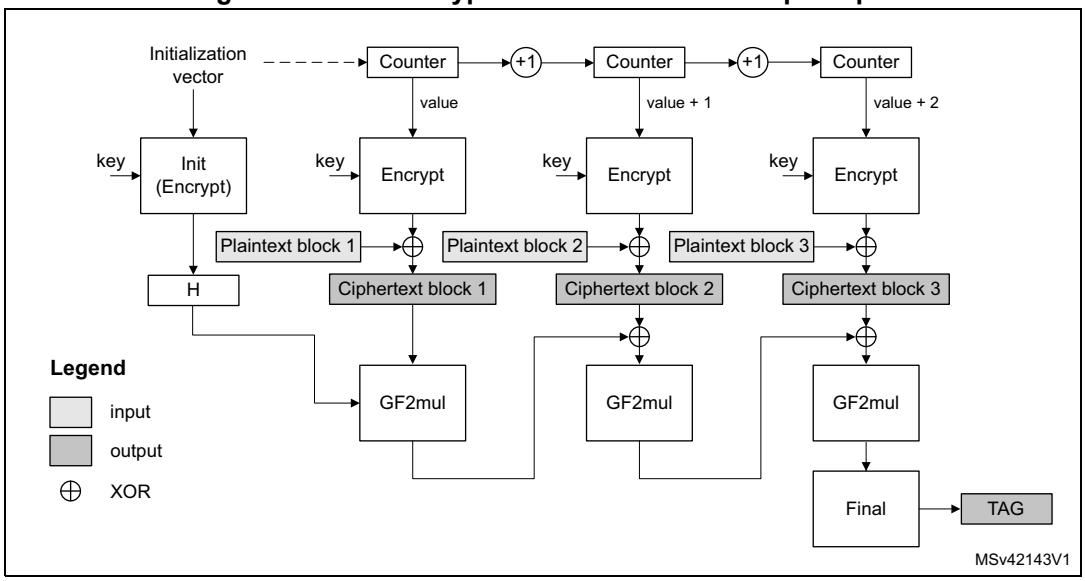

In Galois/counter mode (GCM), the plaintext message is encrypted while a message authentication code (MAC) is computed in parallel, thus generating the corresponding ciphertext and its MAC (also known as authentication tag). It is defined in NIST *Special Publication 800-38D, Recommendation for Block Cipher Modes of Operation - Galois/Counter Mode (GCM) and GMAC.*

GCM mode is based on AES in counter mode for confidentiality. It uses a multiplier over a fixed finite field for computing the message authentication code. It requires an initial value and a particular 128-bit block at the end of the message.

Galois message authentication code (GMAC) principle

Figure 73. GMAC authentication principle

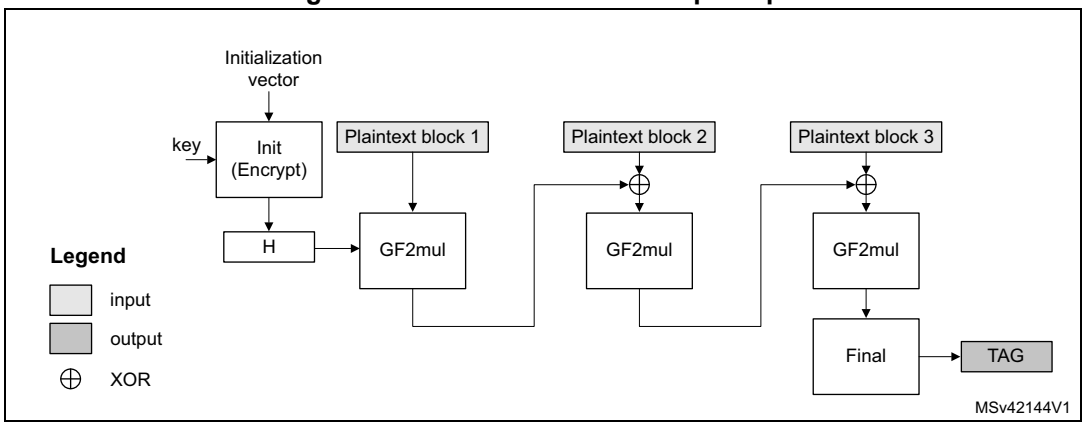

Galois message authentication code (GMAC) allows authenticating a message and generating the corresponding message authentication code (MAC). It is defined in NIST *Special Publication 800-38D, Recommendation for Block Cipher Modes of Operation - Galois/Counter Mode (GCM) and GMAC.*

GMAC is similar to GCM, except that it is applied on a message composed only by plaintext authenticated data (that is, only header, no payload).

Counter with CBC-MAC (CCM) principle

Figure 74. CCM encryption and authentication principle

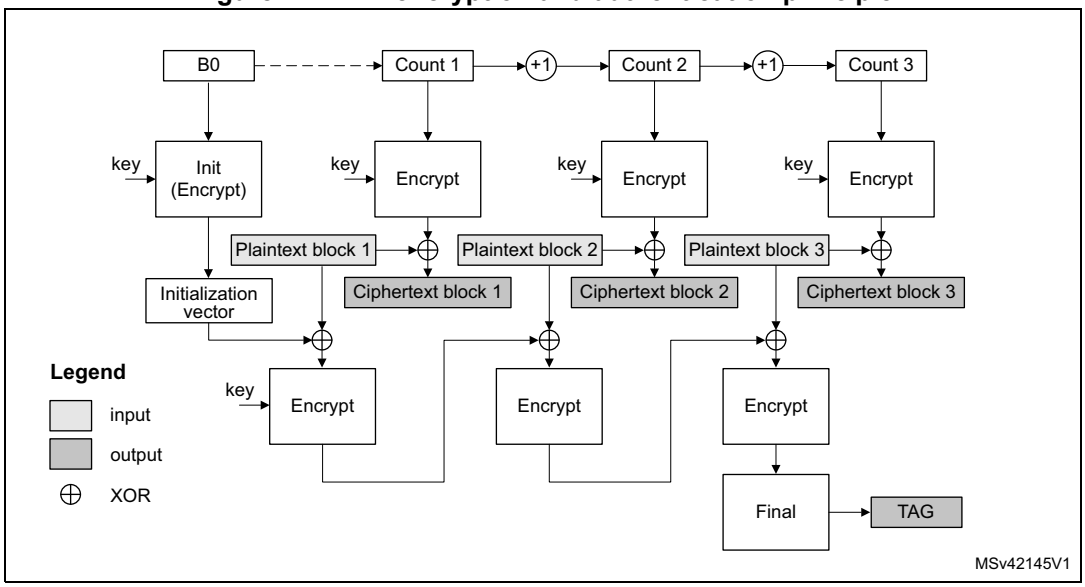

In Counter with cipher block chaining-message authentication code (CCM) mode, the plaintext message is encrypted while a message authentication code (MAC) is computed in parallel, thus generating the corresponding ciphertext and the corresponding MAC (also known as tag). It is described by NIST in *Special Publication 800-38C, Recommendation for Block Cipher Modes of Operation - The CCM Mode for Authentication and Confidentiality*.

CCM mode is based on AES in counter mode for confidentiality and it uses CBC for computing the message authentication code. It requires an initial value.

Like GCM, the CCM chaining mode can be applied on a message composed only by plaintext authenticated data (that is, only header, no payload). Note that this way of using CCM is not called CMAC (it is not similar to GCM/GMAC), and its use is not recommended by NIST.

19.4.4 AES procedure to perform a cipher operation

Introduction

A typical cipher operation is explained below. Detailed information is provided in sections starting from *Section 19.4.8: AES basic chaining modes (ECB, CBC)*.

Initialization of AES

To initialize AES, first disable it by clearing the EN bit of the AES_CR register. Then perform the following steps in any order:

- Configure the AES mode, by programming the MODE[1:0] bitfield of the AES_CR register.
  - For encryption, select Mode 1 (MODE[1:0] = 00).
  - For decryption, select Mode 3 (MODE[1:0] = 10), unless ECB or CBC chaining modes are used. In this latter case, perform an initial key derivation of the encryption key, as described in *Section 19.4.5: AES decryption round key preparation*.
- Select the chaining mode, by programming the CHMOD[2:0] bitfield of the AES_CR register.
- Configure the data type (1-, 8-, 16- or 32-bit), with the DATATYPE[1:0] bitfield in the AES_CR register.
- When it is required (for example in CBC or CTR chaining modes), write the initialization vector into the AES_IVRx registers.
- Configure the key size (128-bit or 256-bit), with the KEYSIZE bitfield of the AES_CR register.
- Write a symmetric key into the AES_KEYRx registers (4 or 8 registers depending on the key size).

Data append

This section describes different ways of appending data for processing, where the size of data to process is not a multiple of 128 bits.

For ECB or CBC mode, refer to *Section 19.4.6: AES ciphertext stealing and data padding*. The last block management in these cases is more complex than in the sequence described in this section.

Data append through polling

This method uses flag polling to control the data append through the following sequence:

1. Enable the AES peripheral by setting the EN bit of the AES_CR register.
2. Repeat the following sub-sequence until the payload is entirely processed:
   a) Write four input data words into the AES_DINR register.
   b) Wait until the status flag CCF is set in the AES_SR, then read the four data words from the AES_DOUTR register.
   c) Clear the CCF flag, by setting the CCFC bit of the AES_CR register.
   d) If the data block just processed is the second-last block of the message and the significant data in the last block to process is inferior to 128 bits, pad the remainder of the last block with zeros and, in case of GCM payload encryption or CCM payload decryption, specify the number of non-valid bytes, using the NPBLB bitfield of the AES_CR register, for AES to compute a correct tag;.
3. As it is the last block, discard the data that is not part of the data, then disable the AES peripheral by clearing the EN bit of the AES_CR register.

Note: Up to three wait cycles are automatically inserted between two consecutive writes to the AES_DINR register, to allow sending the key to the AES processor.

NPBLB bits are not used in header phase of GCM, GMAC and CCM chaining modes.

Data append using interrupt

The method uses interrupt from the AES peripheral to control the data append, through the following sequence:

1. Enable interrupts from AES by setting the CCFIE bit of the AES_CR register.
2. Enable the AES peripheral by setting the EN bit of the AES_CR register.
3. Write first four input data words into the AES_DINR register.
4. Handle the data in the AES interrupt service routine, upon interrupt:
   a) Read four output data words from the AES_DOUTR register.
   b) Clear the CCF flag and thus the pending interrupt, by setting the CCFC bit of the AES_CR register.
   c) If the data block just processed is the second-last block of an message and the significant data in the last block to process is inferior to 128 bits, pad the remainder of the last block with zeros and, in case of GCM payload encryption or CCM payload decryption, specify the number of non-valid bytes, using the NPBLB bitfield of the AES_CR register, for AES to compute a correct tag;. Then proceed with point 4e).
   d) If the data block just processed is the last block of the message, discard the data that is not part of the data, then disable the AES peripheral by clearing the EN bit of the AES_CR register and quit the interrupt service routine.
   e) Write next four input data words into the AES_DINR register and quit the interrupt service routine.

Note: AES is tolerant of delays between consecutive read or write operations, which allows, for example, an interrupt from another peripheral to be served between two AES computations.

NPBLB bits are not used in header phase of GCM, GMAC and CCM chaining modes.

Data append using DMA

With this method, all the transfers and processing are managed by DMA and AES. To use the method, proceed as follows:

1. Prepare the last four-word data block (if the data to process does not fill it completely), by padding the remainder of the block with zeros.
2. Configure the DMA controller so as to transfer the data to process from the memory to the AES peripheral input and the processed data from the AES peripheral output to the memory, as described in *Section 19.4.16: AES DMA interface*. Configure the DMA controller so as to generate an interrupt on transfer completion. In case of GCM payload encryption or CCM payload decryption, DMA transfer **must not** include the last four-word block if padded with zeros. The sequence described in *Data append through polling* must be used instead for this last block, because NPBLB bits must be setup before processing the block, for AES to compute a correct tag.
3. Enable the AES peripheral by setting the EN bit of the AES_CR register
4. Enable DMA requests by setting the DMAINEN and DMAOUTEN bits of the AES_CR register.
5. Upon DMA interrupt indicating the transfer completion, get the AES-processed data from the memory.

Note: The CCF flag has no use with this method, because the reading of the AES_DOUTR register is managed by DMA automatically, without any software action, at the end of the computation phase.

NPBLB bits are not used in header phase of GCM, GMAC, and CCM chaining modes.

19.4.5 AES decryption round key preparation

Internal key schedule is used to generate AES round keys. In AES encryption, the round 0 key is the one stored in the key registers. AES decryption must start using the last round key. As the encryption key is stored in memory, a special key scheduling must be performed to obtain the decryption key. This key scheduling is only required for AES decryption in ECB and CBC modes.

Recommended method is to select the Mode 2 by setting to 01 the MODE[1:0] bitfield of the AES_CR (key process only), then proceed with the decryption by setting MODE[1:0] to 10 (Mode 3, decryption only). Mode 2 usage is described below:

1. Disable the AES peripheral by clearing the EN bit of the AES_CR register.
2. Select Mode 2 by setting to 01 the MODE[1:0] bitfield of the AES_CR. The CHMOD[2:0] bitfield is not significant in this case because this key derivation mode is independent of the chaining algorithm selected.
3. Set key length to 128 or 256 bits, via KEYSIZE bit of AES_CR register.
4. Write the AES_KEYRx registers (128 or 256 bits) with encryption key, as shown in *Figure 75*. Writes to the AES_IVRx registers have no effect.
5. Enable the AES peripheral, by setting the EN bit of the AES_CR register.
6. Wait until the CCF flag is set in the AES_SR register.
7. Clear the CCF flag. Derived key is available in AES core, ready to use for decryption. Application can also read the AES_KEYRx register to obtain the derived key if needed, as shown in *Figure 75* (the processed key is loaded automatically into the AES_KEYRx registers).

Note: The AES is disabled by hardware when the derivation key is available.

To restart a derivation key computation, repeat steps 4, 5, 6, and 7.

Figure 75. Encryption key derivation for ECB/CBC decryption (Mode 2)

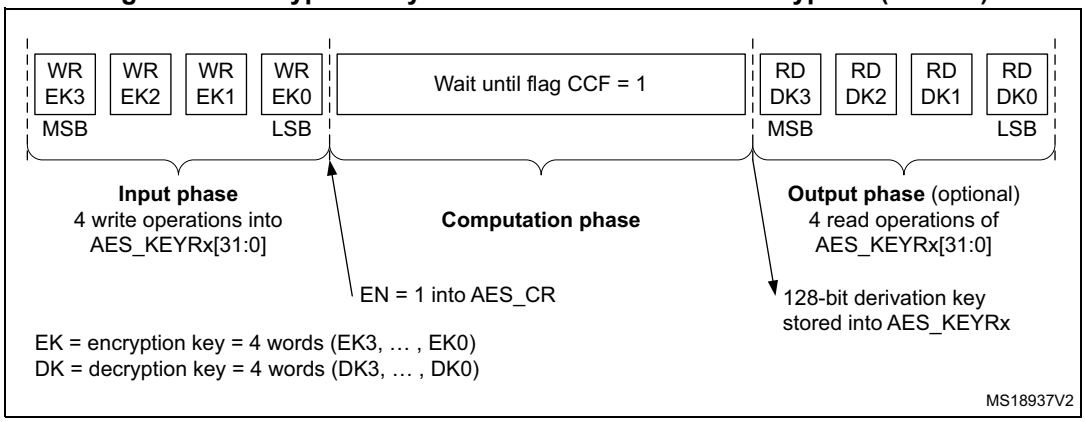

If the software stores the initial key prepared for decryption, it is enough to do the key schedule operation only once for all the data to be decrypted with a given cipher key.

Note: The operation of the key preparation lasts 59 or 82 clock cycles, depending on the key size (128- or 256-bit).

19.4.6 AES ciphertext stealing and data padding

When using AES in ECB or CBC modes to manage messages the size of which is not a multiple of the block size (128 bits), ciphertext stealing techniques are used, such as those described in NIST *Special Publication 800-38A, Recommendation for Block Cipher Modes of Operation: Three Variants of Ciphertext Stealing for CBC Mode*. Since the AES peripheral does not support such techniques, the application must complete the last block of input data using data from the second last block.

Note: Ciphertext stealing techniques are not documented in this reference manual.

Similarly, when AES is used in other modes than ECB or CBC, an incomplete input data block (that is, block with input data shorter than 128 bits) must be padded with zeros prior to encryption (that is, extra bits must be appended to the trailing end of the data string). After decryption, the extra bits must be discarded. As AES does not implement automatic data padding operation to **the last block**, the application must follow the recommendation given in *Section 19.4.4: AES procedure to perform a cipher operation on page 453* to manage messages the size of which is not a multiple of 128 bits.

Note: Padding data are swapped in a similar way as normal data, according to the DATATYPE[1:0] field of the AES_CR register (see Section 19.4.13: AES data registers and data swapping for details).

19.4.7 AES task suspend and resume

A message can be suspended if another message with a higher priority must be processed. When this highest priority message is sent, the suspended message can resume in both encryption or decryption mode.

Suspend/resume operations do not break the chaining operation and the message processing can resume as soon as AES is enabled again to receive the next data block.

Figure 76 gives an example of suspend/resume operation: Message 1 is suspended in order to send a shorter and higher-priority Message 2.

Figure 76. Example of suspend mode management

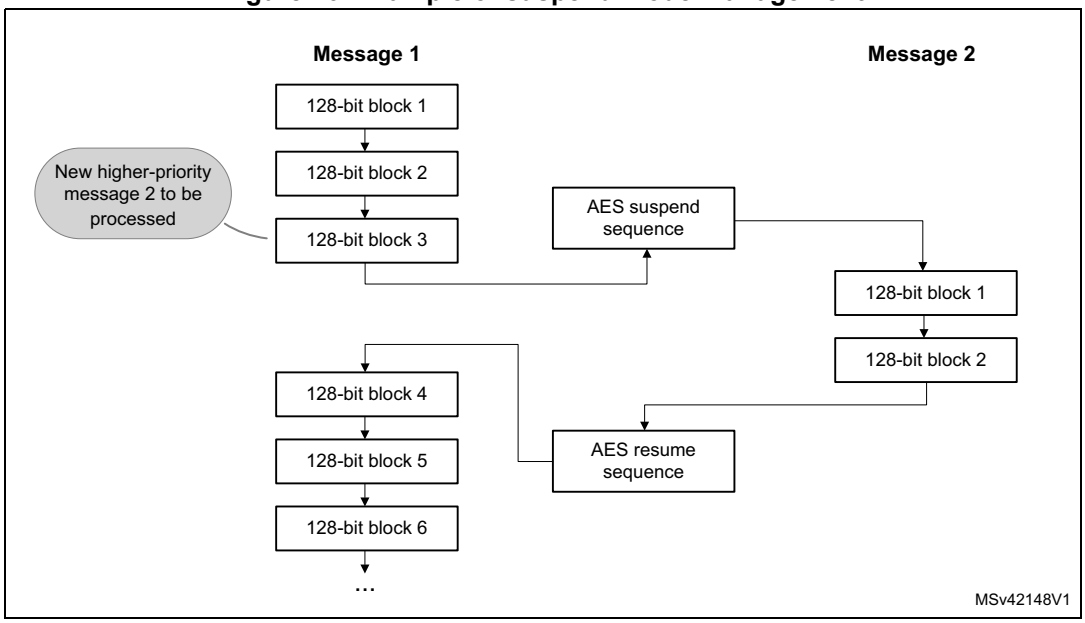

A detailed description of suspend/resume operations is in the sections dedicated to each AES mode.

19.4.8 AES basic chaining modes (ECB, CBC)

Overview

This section gives a brief explanation of the four basic operation modes provided by the AES core: ECB encryption, ECB decryption, CBC encryption and CBC decryption. For detailed information, refer to the FIPS publication 197 from November 26, 2001.

Figure 77 illustrates the electronic codebook (ECB) encryption.

Figure 77. ECB encryption

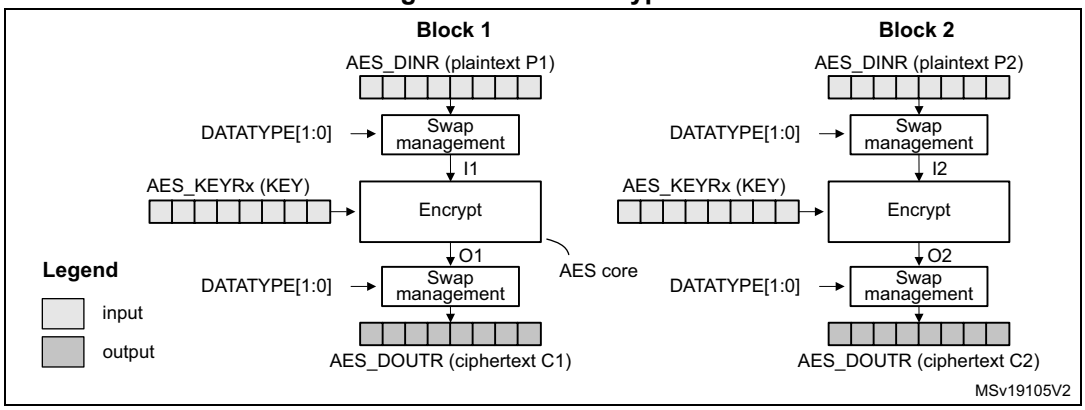

In ECB encrypt mode, the 128-bit plaintext input data block Px in the AES_DINR register first goes through bit/byte/half-word swapping. The swap result Ix is processed with the AES core set in encrypt mode, using a 128- or 256-bit key. The encryption result Ox goes through bit/byte/half-word swapping, then is stored in the AES_DOUTR register as 128-bit ciphertext output data block Cx. The ECB encryption continues in this way until the last complete plaintext block is encrypted.

Figure 78 illustrates the electronic codebook (ECB) decryption.

Figure 78. ECB decryption

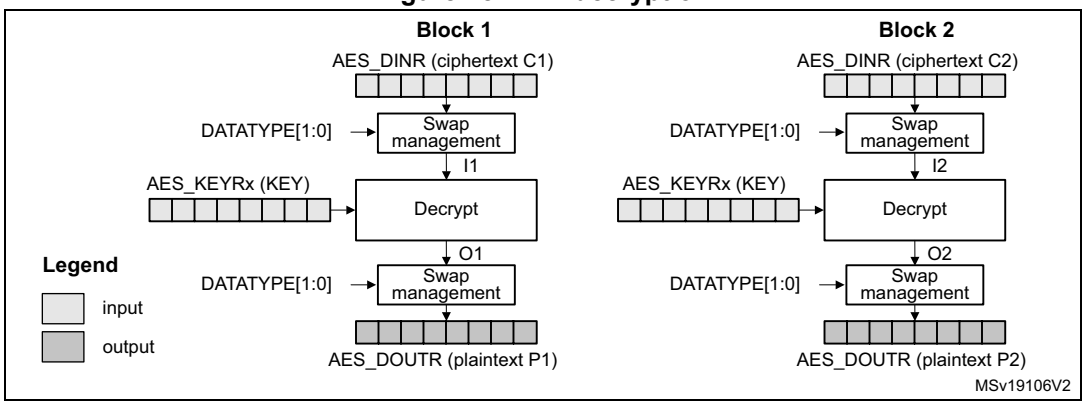

To perform an AES decryption in the ECB mode, the secret key has to be prepared by collecting the last-round encryption key (which requires to first execute the complete key schedule for encryption), and using it as the first-round key for the decryption of the ciphertext. This preparation is supported by the AES core.

In ECB decrypt mode, the 128-bit ciphertext input data block C1 in the AES_DINR register first goes through bit/byte/half-word swapping. The keying sequence is reversed compared to that of the ECB encryption. The swap result I1 is processed with the AES core set in decrypt mode, using the formerly prepared decryption key. The decryption result goes through bit/byte/half-word swapping, then is stored in the AES_DOUTR register as 128-bit plaintext output data block P1. The ECB decryption continues in this way until the last complete ciphertext block is decrypted.

Figure 79 illustrates the cipher block chaining (CBC) encryption.

Figure 79. CBC encryption

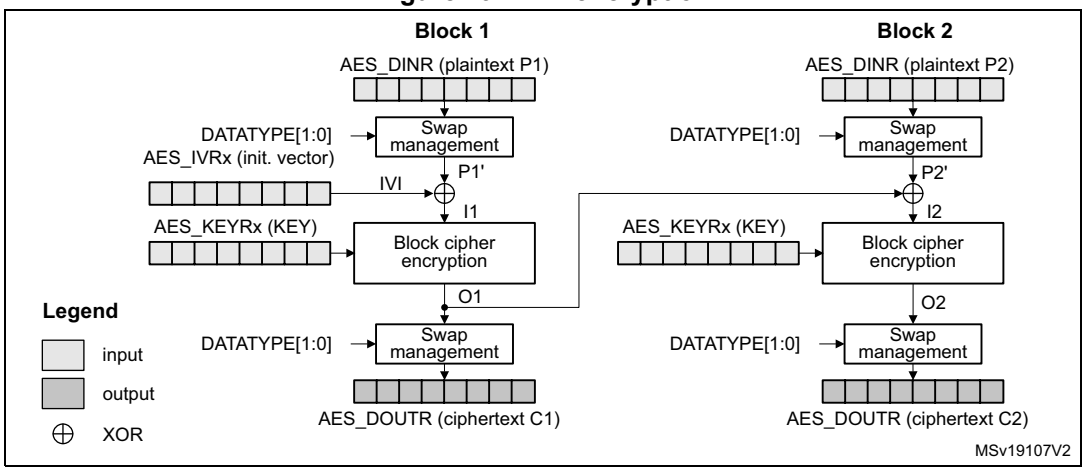

In CBC encrypt mode, the first plaintext input block, after bit/byte/half-word swapping (P1'), is XOR-ed with a 128-bit IVI bitfield (initialization vector and counter), producing the I1 input data for encrypt with the AES core, using a 128- or 256-bit key. The resulting 128-bit output block O1, after swapping operation, is used as ciphertext C1. The O1 data is then XOR-ed with the second-block plaintext data P2' to produce the I2 input data for the AES core to produce the second block of ciphertext data. The chaining of data blocks continues in this way until the last plaintext block in the message is encrypted.

If the message size is not a multiple of 128 bits, the final partial data block is encrypted in the way explained in *Section 19.4.6: AES ciphertext stealing and data padding*.

Figure 80 illustrates the cipher block chaining (CBC) decryption.

Figure 80. CBC decryption

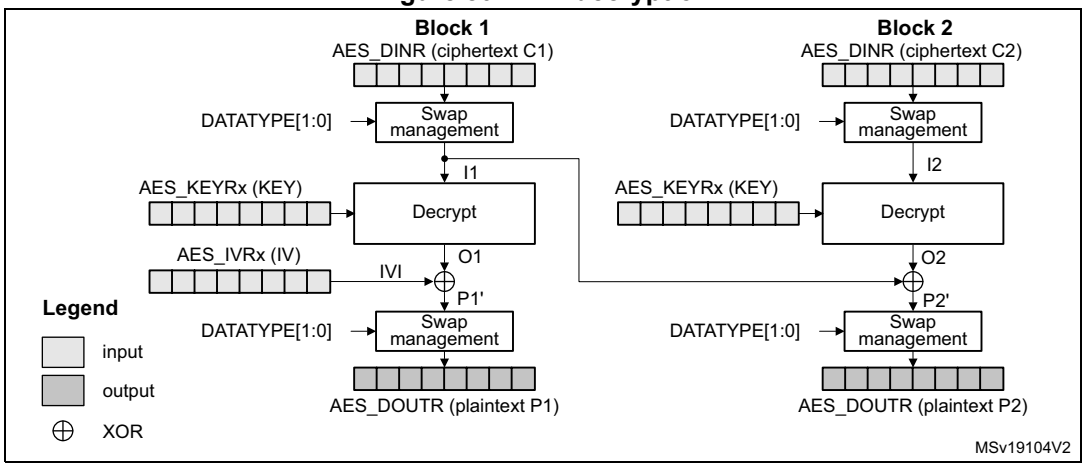

In CBC decrypt mode, like in ECB decrypt mode, the secret key must be prepared to perform an AES decryption.

After the key preparation process, the decryption goes as follows: the first 128-bit ciphertext block (after the swap operation) is used directly as the AES core input block I1 for decrypt operation, using the 128-bit or 256-bit key. Its output O1 is XOR-ed with the 128-bit IVI field (that must be identical to that used during encryption) to produce the first plaintext block P1.

The second ciphertext block is processed in the same way as the first block, except that the I1 data from the first block is used in place of the initialization vector.

The decryption continues in this way until the last complete ciphertext block is decrypted.

If the message size is not a multiple of 128 bits, the final partial data block is decrypted in the way explained in *Section 19.4.6: AES ciphertext stealing and data padding*.

For more information on data swapping, refer to *Section 19.4.13: AES data registers and data swapping*.

ECB/CBC encryption sequence

The sequence of events to perform an ECB/CBC encryption (more detail in *Section 19.4.4*):

1. Disable the AES peripheral by clearing the EN bit of the AES_CR register.
2. Select the Mode 1 by setting to 00 the MODE[1:0] bitfield of the AES_CR register and select ECB or CBC chaining mode by setting the CHMOD[2:0] bitfield of the AES_CR register to 000 or 001, respectively. Data type can also be defined, using DATATYPE[1:0] bitfield.
3. Select 128- or 256-bit key length through the KEYSIZE bit of the AES_CR register.
4. Write the AES_KEYRx registers (128 or 256 bits) with encryption key. Fill the AES_IVRx registers with the initialization vector data if CBC mode has been selected.
5. Enable the AES peripheral by setting the EN bit of the AES_CR register.
6. Write the AES_DINR register four times to input the plaintext (MSB first), as shown in *Figure 81*.
7. Wait until the CCF flag is set in the AES_SR register.
8. Read the AES_DOUTR register four times to get the ciphertext (MSB first) as shown in *Figure 81*. Then clear the CCF flag by setting the CCFC bit of the AES_CR register.
9. Repeat steps *6-7-8* to process all the blocks with the same encryption key.

Figure 81. ECB/CBC encryption (Mode 1)

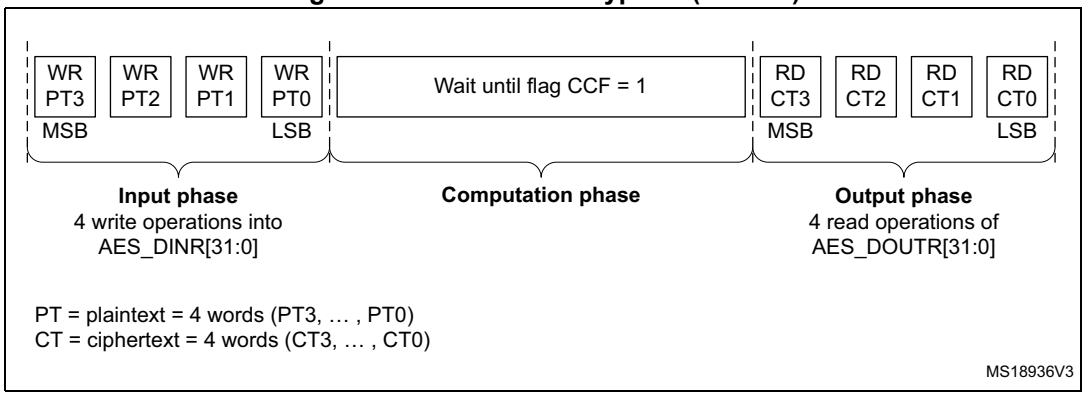

ECB/CBC decryption sequence

The sequence of events to perform an AES ECB/CBC decryption is as follows (More detail in *Section 19.4.4*).

1. Follow the steps described in *Section 19.4.5: AES decryption round key preparation*, in order to prepare the decryption key in AES core.
2. Select the Mode 3 by setting to 10 the MODE[1:0] bitfield of the AES_CR register and select ECB or CBC chaining mode by setting the CHMOD[2:0] bitfield of the AES_CR register to 000 or 001, respectively. Data type can also be defined, using DATATYPE[1:0] bitfield. KEYSIZE bitfield must be kept as-is.
3. Write the AES_IVRx registers with the initialization vector (required in CBC mode only).
4. Enable AES by setting the EN bit of the AES_CR register.
5. Write the AES_DINR register four times to input the cipher text (MSB first), as shown in *Figure 82*.
6. Wait until the CCF flag is set in the AES_SR register.
7. Read the AES_DOUTR register four times to get the plain text (MSB first), as shown in *Figure 82*. Then clear the CCF flag by setting the CCFC bit of the AES_CR register.
8. Repeat steps *5-6-7* to process all the blocks encrypted with the same key.

Figure 82. ECB/CBC decryption (Mode 3)

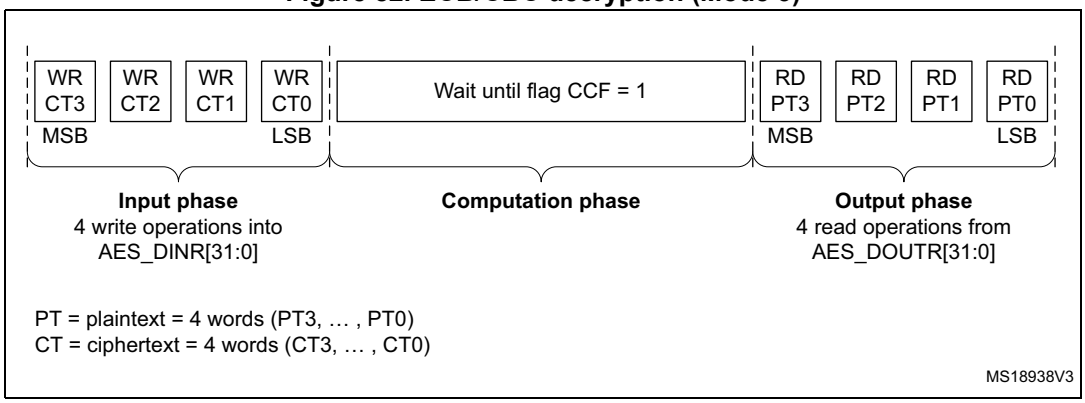

Suspend/resume operations in ECB/CBC modes

To suspend the processing of a message, proceed as follows:

1. If DMA is used, stop the AES DMA transfers to the IN FIFO by clearing the DMAINEN bit of the AES_CR register.
2. If DMA is not used, read four times the AES_DOUTR register to save the last processed block. If DMA is used, wait until the CCF flag is set in the AES_SR register then stop the DMA transfers from the OUT FIFO by clearing the DMAOUTEN bit of the AES_CR register.
3. If DMA is not used, poll the CCF flag of the AES_SR register until it becomes 1 (computation completed).
4. Clear the CCF flag by setting the CCFC bit of the AES_CR register.
5. Save initialization vector registers (only required in CBC mode as AES_IVRx registers are altered during the data processing).

6. Disable the AES peripheral by clearing the bit EN of the AES_CR register.
7. Save the AES_CR register and clear the key registers if they are not needed, to process the higher priority message.
8. If DMA is used, save the DMA controller status (pointers for IN and OUT data transfers, number of remaining bytes, and so on).

Note: In point 7, the derived key information stored in AES_KEYRx registers can optionally be saved in memory if the interrupted process is a decryption. Otherwise those registers do not need to be saved as the original key value is known by the application

To resume the processing of a message, proceed as follows:

1. If DMA is used, configure the DMA controller so as to complete the rest of the FIFO IN and FIFO OUT transfers.
2. Disable the AES peripheral by clearing the EN bit of the AES_CR register.
3. Restore AES_CR register (with correct KEYSIZE) then restore AES_KEYRx registers. In case of decryption, derived key information can be written in AES_KEYRx register instead of the original key value.
4. Prepare the decryption key as described in *Section 19.4.5: AES decryption round key preparation* (only required for ECB or CBC decryption). This step is not necessary if derived key information is loaded in AES_KEYRx registers.
5. Restore AES_IVRx registers using the saved configuration (only required in CBC mode).
6. Enable the AES peripheral by setting the EN bit of the AES_CR register.
7. If DMA is used, enable AES DMA transfers by setting the DMAINEN and DMAOUTEN bits of the AES_CR register.

Alternative single ECB/CBC decryption using Mode 4

The sequence of events to perform a single round of ECB/CBC decryption using Mode 4 is:

1. Disable the AES peripheral by clearing the EN bit of the AES_CR register.
2. Select the Mode 4 by setting to 11 the MODE[1:0] bitfield of the AES_CR register and select ECB or CBC chaining mode by setting the CHMOD[2:0] bitfield of the AES_CR register to 0x0 or 0x1, respectively.
3. Select key length of 128 or 256 bits via KEYSIZE bitfield of the AES_CR register.
4. Write the AES_KEYRx registers with the encryption key. Write the AES_IVRx registers if the CBC mode is selected.
5. Enable the AES peripheral by setting the EN bit of the AES_CR register.
6. Write the AES_DINR register four times to input the cipher text (MSB first).
7. Wait until the CCF flag is set in the AES_SR register.
8. Read the AES_DOUTR register four times to get the plain text (MSB first). Then clear the CCF flag by setting the CCFC bit of the AES_CR register.

Note: When mode 4 is selected mode 3 cannot be used.

In mode 4, the AES_KEYRx registers contain the encryption key during all phases of the processing. No derivation key is stored in these registers. It is stored internally in AES.

19.4.9 AES counter (CTR) mode

Overview

The counter mode (CTR) uses AES as a key-stream generator. The generated keys are then XOR-ed with the plaintext to obtain the ciphertext.

CTR chaining is defined in NIST *Special Publication 800-38A, Recommendation for Block Cipher Modes of Operation.* A typical message construction in CTR mode is given in *Figure 83*.

Figure 83. Message construction in CTR mode

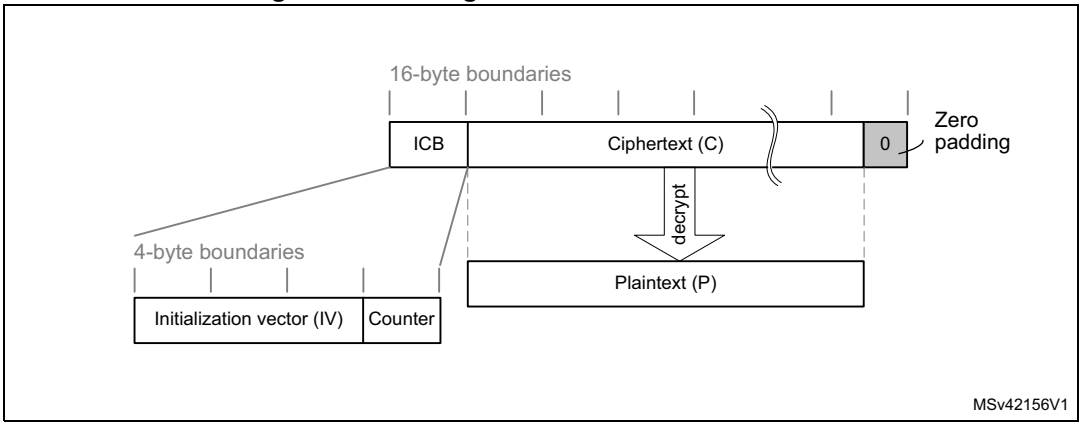

The structure of this message is:

- A 16-byte initial counter block (ICB), composed of two distinct fields:
  - **Initialization vector** (IV): a 96-bit value that must be unique for each encryption cycle with a given key.
  - **Counter**: a 32-bit big-endian integer that is incremented each time a block processing is completed. The initial value of the counter must be set to 1.
- The plaintext P is encrypted as ciphertext C, with a known length. This length can be non-multiple of 16 bytes, in which case a plaintext padding is required.

CTR encryption and decryption

Figure 84 and *Figure 85* describe the CTR encryption and decryption process, respectively, as implemented in the AES peripheral. The CTR mode is selected by writing 010 to the CHMOD[2:0] bitfield of AES_CR register.

Figure 84. CTR encryption

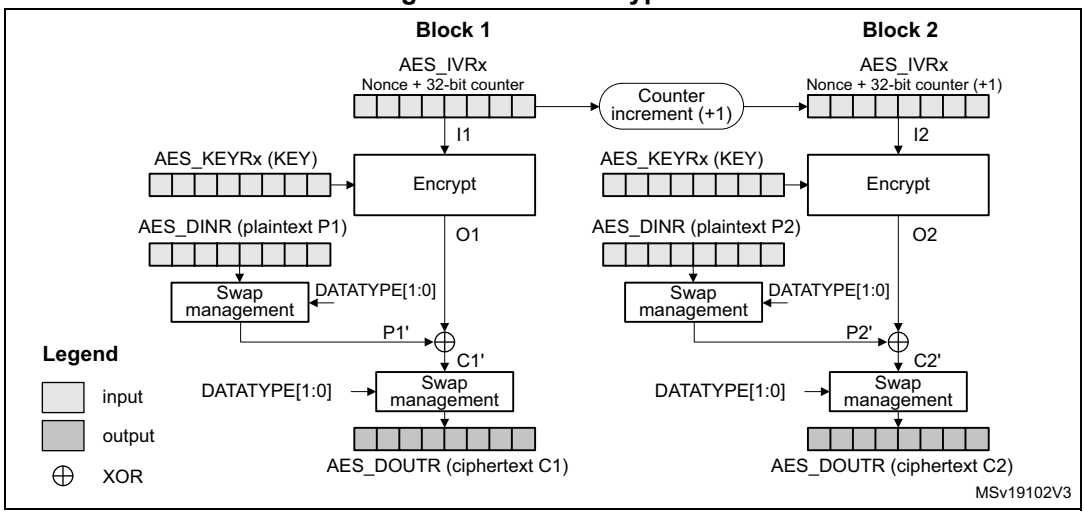

Figure 85. CTR decryption

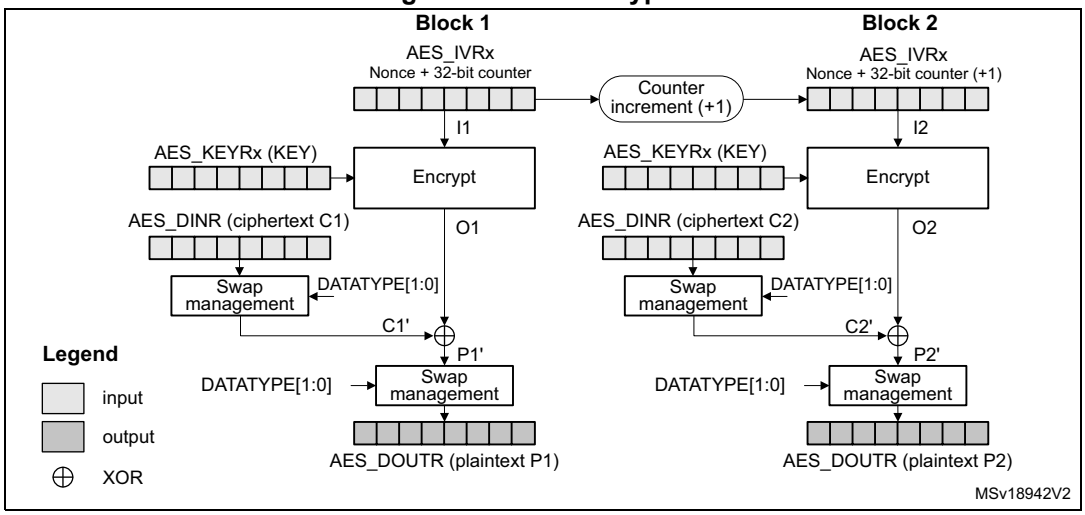

In CTR mode, the cryptographic core output (also called keystream) Ox is XOR-ed with relevant input block (Px' for encryption, Cx' for decryption), to produce the correct output block (Cx' for encryption, Px' for decryption). Initialization vectors in AES must be initialized as shown in *Table 91*.

Table 91. CTR mode initialization vector definition

AES_IVR3[31:0]	AES_IVR2[31:0]	AES_IVR1[31:0]	AES_IVR0[31:0]
IVI[127:96]	IVI[95:64]	IVI[63:32]	IVI[31:0} 32-bit counter = 0x0001

Unlike in CBC mode that uses the AES_IVRx registers only once when processing the first data block, in CTR mode AES_IVRx registers are used for processing each data block, and the AES peripheral increments the counter bits of the initialization vector (leaving the nonce bits unchanged).

CTR decryption does not differ from CTR encryption, since the core always encrypts the current counter block to produce the key stream that is then XOR-ed with the plaintext (CTR encryption) or ciphertext (CTR decryption) input. In CTR mode, the MODE[1:0] bitfield setting 01 (key derivation) is forbidden and all the other settings default to encryption mode.

The sequence of events to perform an encryption or a decryption in CTR chaining mode:

1. Disable the AES peripheral by clearing the EN bit of the AES_CR register.
2. Select CTR chaining mode by setting to 010 the CHMOD[2:0] bitfield of the AES_CR register. Set MODE[1:0] bitfield to any value other than 01.
3. Initialize the AES_KEYRx registers, and load the AES_IVRx registers as described in *Table 91*.
4. Set the EN bit of the AES_CR register, to start encrypting the current counter (EN is automatically reset when the calculation finishes).
5. If it is the last block, pad the data with zeros to have a complete block, if needed.
6. Append data in AES, and read the result. The three possible scenarios are described in *Section 19.4.4: AES procedure to perform a cipher operation*.
7. Repeat the previous step till the second-last block is processed. For the last block, apply the two previous steps and discard the bits that are not part of the payload (if the size of the significant data in the last input block is less than 16 bytes).

Suspend/resume operations in CTR mode

Like for the CBC mode, it is possible to interrupt a message to send a higher priority message, and resume the message that was interrupted. Detailed CBC suspend/resume sequence is described in *Section 19.4.8: AES basic chaining modes (ECB, CBC)*.

Note: Like for CBC mode, the AES_IVRx registers must be reloaded during the resume operation.

19.4.10 AES Galois/counter mode (GCM)

Overview

The AES Galois/counter mode (GCM) allows encrypting and authenticating a plaintext message into the corresponding ciphertext and tag (also known as message authentication code). To ensure confidentiality, GCM algorithm is based on AES counter mode. It uses a multiplier over a fixed finite field to generate the tag.

GCM chaining is defined in NIST *Special Publication 800-38D, Recommendation for Block Cipher Modes of Operation - Galois/Counter Mode (GCM) and GMAC.* A typical message construction in GCM mode is given in *Figure 86*.

Figure 86. Message construction in GCM

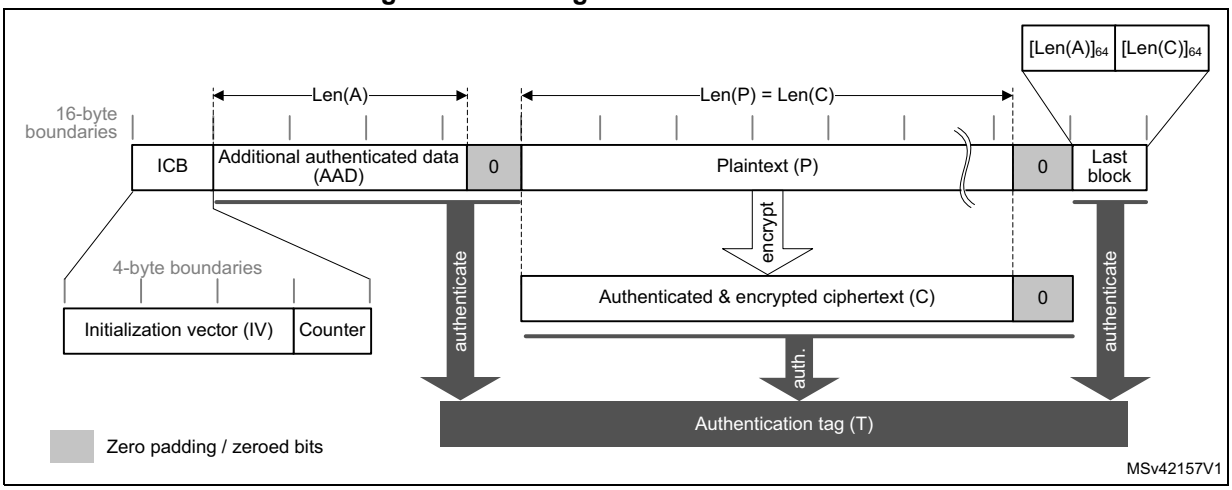

The message has the following structure:

- **16-byte initial counter block (ICB)**, composed of two distinct fields:
  - **Initialization vector (IV):** a 96-bit value that must be unique for each encryption cycle with a given key. Note that the GCM standard supports IVs with less than 96 bits, but in this case strict rules apply.
  - **Counter:** a 32-bit big-endian integer that is incremented each time a block processing is completed. According to NIST specification, the counter value is 0x2 when processing the first block of payload.
- **Authenticated header AAD** (also knows as additional authentication data) has a known length Len(A) that may be a non-multiple of 16 bytes, and must not exceed $2^{64} – 1$ bits. This part of the message is only authenticated, not encrypted.
- **Plaintext message P** is both authenticated and encrypted as ciphertext C, with a known length Len(P) that may be non-multiple of 16 bytes, and cannot exceed 2^{32} - 2 128-bit blocks.
- **Last block** contains the AAD header length (bits [32:63]) and the payload length (bits [96:127]) information, as shown in *Table 92*.

The GCM standard specifies that ciphertext C has the same bit length as the plaintext P.

When a part of the message (AAD or P) has a length that is a non-multiple of 16-bytes a special padding scheme is required.

Table 92. GCM last block definition

Endianness	Bit[0] ---------- Bit[31]	Bit[32]---------- Bit[63]	Bit[64] -------- Bit[95]	Bit[96] --------- Bit[127]
Input data	0x0	AAD length[31:0]	0x0	Payload length[31:0]

GCM processing

Figure 87 describes the GCM implementation in the AES peripheral. The GCM is selected by writing 011 to the CHMOD[2:0] bitfield of the AES_CR register.

Figure 87. GCM authenticated encryption

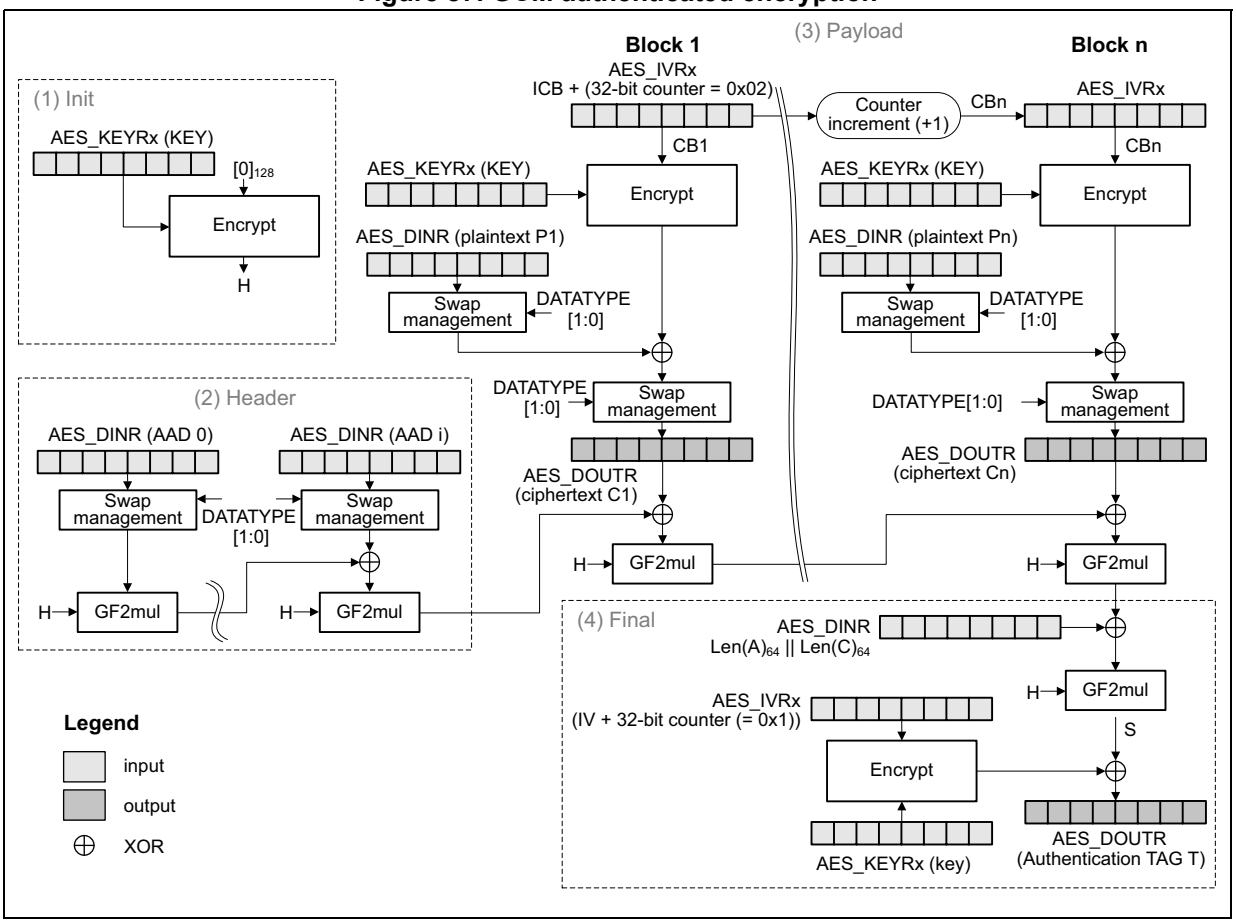

The mechanism for the confidentiality of the plaintext in GCM mode is similar to that in the Counter mode, with a particular increment function (denoted 32-bit increment) that generates the sequence of input counter blocks.

AES_IVRx registers keeping the **counter block** of data are used for processing each data block. The AES peripheral automatically increments the Counter[31:0] bitfield. The first counter block (CB1) is derived from the initial counter block ICB by the application software (see *Table 93*).

Table 93. Initialization of AES_IVRx registers in GCM mode

AES_IVR3[31:0]	AES_IVR2[31:0]	AES_IVR1[31:0]	AES_IVR0[31:0]
ICB[127:96]	ICB[95:64]	ICB[63:32]	ICB[31:0] 32-bit counter = 0x0002

Note: In this mode, the settings 01 and 11 of the MODE[1:0] bitfield are forbidden.

The authentication mechanism in GCM mode is based on a hash function called **GF2mul** that performs multiplication by a fixed parameter, called hash subkey (H), within a binary Galois field.

A GCM message is processed through the following phases, further described in next subsections:

- **Init phase**: AES prepares the GCM hash subkey (H).
- **Header phase**: AES processes the additional authenticated data (AAD), with hash computation only.
- **Payload phase**: AES processes the plaintext (P) with hash computation, counter block encryption and data XOR-ing. It operates in a similar way for ciphertext (C).
- **Final phase**: AES generates the authenticated tag (T) using the last block of the message.

GCM init phase

During this first step, the GCM hash subkey (H) is calculated and saved internally, to be used for processing all the blocks. The recommended sequence is:

1. Disable the AES peripheral by clearing the EN bit of the AES_CR register.
2. Select GCM chaining mode, by setting to 011 the CHMOD[2:0] bitfield of the AES_CR register, and optionally, set the DATATYPE[1:0] bitfield.
3. Indicate the Init phase, by setting to 00 the GCMPH[1:0] bitfield of the AES_CR register.
4. Set the MODE[1:0] bitfield of the AES_CR register to 00 or 10. Although the bitfield is only used in payload phase, it is recommended to set it in the Init phase and keep it unchanged in all subsequent phases.
5. Initialize the AES_KEYRx registers with a key, and initialize AES_IVRx registers with the information as defined in *Table 93*.
6. Start the calculation of the hash key, by setting to 1 the EN bit of the AES_CR register (EN is automatically reset when the calculation finishes).
7. Wait until the end of computation, indicated by the CCF flag of the AES_SR transiting to 1. Alternatively, use the corresponding interrupt.
8. Clear the CCF flag of the AES_SR register, by setting the CCFC bit of the AES_CR register.

GCM header phase

This phase coming after the GCM Init phase must be completed before the payload phase. The sequence to execute, identical for encryption and decryption, is:

1. Indicate the header phase, by setting to 01 the GCMPH[1:0] bitfield of the AES_CR register. Do not modify the MODE[1:0] bitfield as set in the Init phase.
2. Enable the AES peripheral by setting the EN bit of the AES_CR register.
3. If it is the last block and the AAD size in the block is inferior to 128 bits, pad the remainder of the block with zeros. Then append the data block into AES in one of ways described in *Section 19.4.4: AES procedure to perform a cipher operation*. No data is read during this phase.
4. Repeat the step *3* until the last additional authenticated data block is processed.

Note: The header phase can be skipped if there is no AAD, that is, Len(A) = 0.

GCM payload phase

This phase, identical for encryption and decryption, is executed after the GCM header phase. During this phase, the encrypted/decrypted payload is stored in the AES_DOUTR register. The sequence to execute is:

1. Indicate the payload phase, by setting to 10 the GCMPH[1:0] bitfield of the AES_CR register. Do not modify the MODE[1:0] bitfield as set in the Init phase.
2. If the header phase was skipped, enable the AES peripheral by setting the EN bit of the AES_CR register.
3. If it is the last block and the plaintext (encryption) or ciphertext (decryption) size in the block is inferior to 128 bits, pad the remainder of the block with zeros.
4. Append the data block into AES in one of ways described in *Section 19.4.4: AES procedure to perform a cipher operation on page 453*, and read the result.
5. Repeat the previous step till the second-last plaintext block is encrypted or till the last block of ciphertext is decrypted. For the last block of plaintext (encryption only), execute the two previous steps. For the last block, discard the bits that are not part of the payload when the last block size is less than 16 bytes.

Note: The payload phase can be skipped if there is no payload data, that is, Len(C) = 0 (see GMAC mode).

GCM final phase

In this last phase, the AES peripheral generates the GCM authentication tag and stores it in the AES_DOUTR register. The sequence to execute is:

1. Indicate the final phase, by setting to 11 the GCMPH[1:0] bitfield of the AES_CR register.
2. Compose the data of the block, by concatenating the AAD bit length and the payload bit length, as shown in *Table 92*. Write the block into the AES_DINR register.
3. Wait until the end of computation, indicated by the CCF flag of the AES_SR transiting to 1.
4. Get the GCM authentication tag, by reading the AES_DOUTR register four times.
5. Clear the CCF flag of the AES_SR register, by setting the CCFC bit of the AES_CR register.
6. Disable the AES peripheral, by clearing the bit EN of the AES_CR register. If it is an authenticated decryption, compare the generated tag with the expected tag passed with the message.

Note: In the final phase, data is written to AES_DINR normally (no swapping), while swapping is applied to tag data read from AES_DOUTR.

When transiting from the header or the payload phase to the final phase, the AES peripheral must not be disabled, otherwise the result is wrong.

Suspend/resume operations in GCM mode

To suspend the processing of a message, proceed as follows:

1. If DMA is used, stop the AES DMA transfers to the IN FIFO by clearing the DMAINEN bit of the AES_CR register. If DMA is not used, make sure that the current computation is completed, which is indicated by the CCF flag of the AES_SR register set to 1.
2. In the payload phase, if DMA is not used, read four times the AES_DOUTR register to save the last-processed block. If DMA is used, wait until the CCF flag is set in the AES_SR register then stop the DMA transfers from the OUT FIFO by clearing the DMAOUTEN bit of the AES_CR register.
3. Clear the CCF flag of the AES_SR register, by setting the CCFC bit of the AES_CR register.
4. Save the AES_SUSPxR registers in the memory, where x is from 0 to 7.
5. In the payload phase, save the AES_IVRx registers as, during the data processing, they changed from their initial values. In the header phase, this step is not required.
6. Disable the AES peripheral, by clearing the EN bit of the AES_CR register.
7. Save the current AES configuration in the memory, excluding the initialization vector registers AES_IVRx. Key registers do not need to be saved as the original key value is known by the application.
8. If DMA is used, save the DMA controller status (pointers for IN data transfers, number of remaining bytes, and so on). In the payload phase, pointers for OUT data transfers must also be saved.

To resume the processing of a message, proceed as follows:

1. If DMA is used, configure the DMA controller in order to complete the rest of the FIFO IN transfers. In the payload phase, the rest of the FIFO OUT transfers must also be configured in the DMA controller.
2. Disable the AES peripheral by clearing the EN bit of the AES_CR register.
3. Write the suspend register values, previously saved in the memory, back into their corresponding AES_SUSPxR registers, where x is from 0 to 7.
4. In the payload phase, write the initialization vector register values, previously saved in the memory, back into their corresponding AES_IVRx registers. In the header phase, write initial setting values back into the AES_IVRx registers.
5. Restore the initial setting values in the AES_CR and AES_KEYRx registers.
6. Enable the AES peripheral by setting the EN bit of the AES_CR register.

If DMA is used, enable AES DMA requests by setting the DMAINEN bit (and DMAOUTEN bit if in payload phase) of the AES_CR register.

19.4.11 AES Galois message authentication code (GMAC)

Overview

The Galois message authentication code (GMAC) allows the authentication of a plaintext, generating the corresponding tag information (also known as message authentication code). It is based on GCM algorithm, as defined in NIST *Special Publication 800-38D, Recommendation for Block Cipher Modes of Operation - Galois/Counter Mode (GCM) and GMAC.*

A typical message construction for GMAC is given in *Figure 88*.

Figure 88. Message construction in GMAC mode

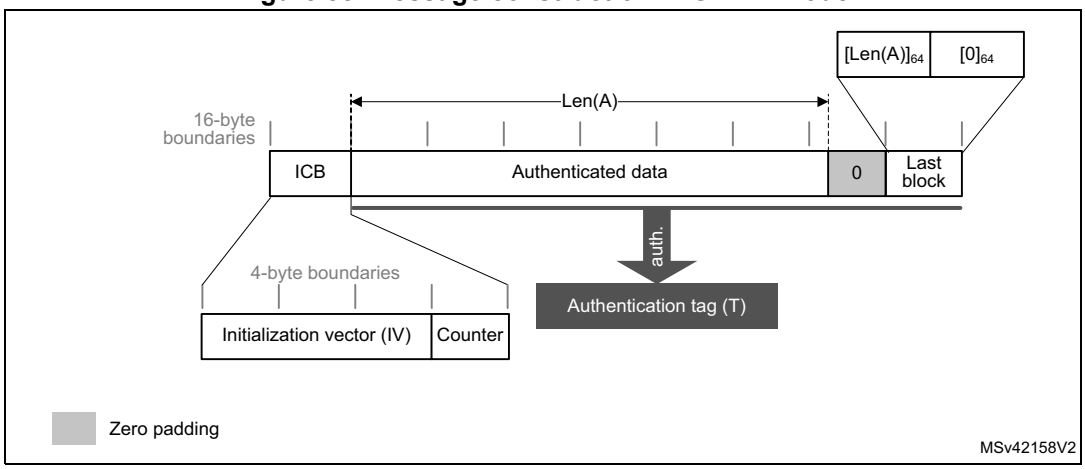

AES GMAC processing

Figure 89 describes the GMAC mode implementation in the AES peripheral. This mode is selected by writing 011 to the CHMOD[2:0] bitfield of the AES_CR register.

Figure 89. GMAC authentication mode

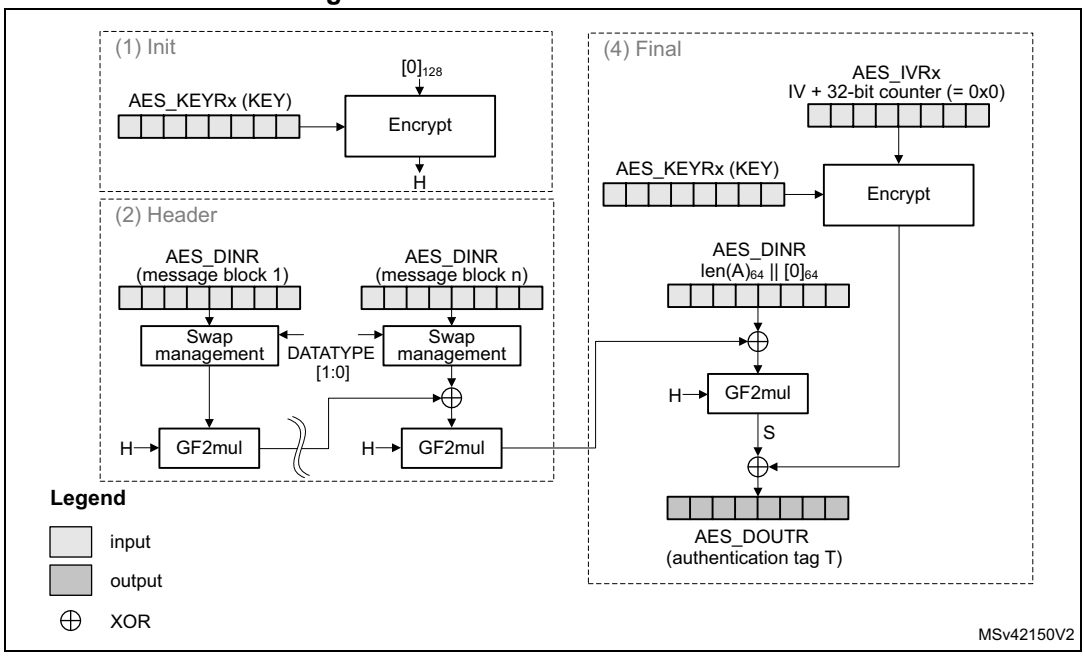

The GMAC algorithm corresponds to the GCM algorithm applied on a message only containing a header. As a consequence, all steps and settings are the same as with the GCM, except that the payload phase is omitted.

Suspend/resume operations in GMAC

In GMAC mode, the sequence described for the GCM applies except that only the header phase can be interrupted.

19.4.12 AES counter with CBC-MAC (CCM)

Overview

The AES **counter with cipher block chaining-message authentication code** (CCM) algorithm allows encryption and authentication of plaintext, generating the corresponding ciphertext and tag (also known as message authentication code). To ensure confidentiality, the CCM algorithm is based on AES in counter mode. It uses cipher block chaining technique to generate the message authentication code. This is commonly called CBC-MAC.

Note: NIST does not approve this CBC-MAC as an authentication mode outside the context of the CCM specification.

CCM chaining is specified in NIST *Special Publication 800-38C, Recommendation for Block Cipher Modes of Operation - The CCM Mode for Authentication and Confidentiality*. A typical message construction for CCM is given in *Figure 90*.

Figure 90. Message construction in CCM mode

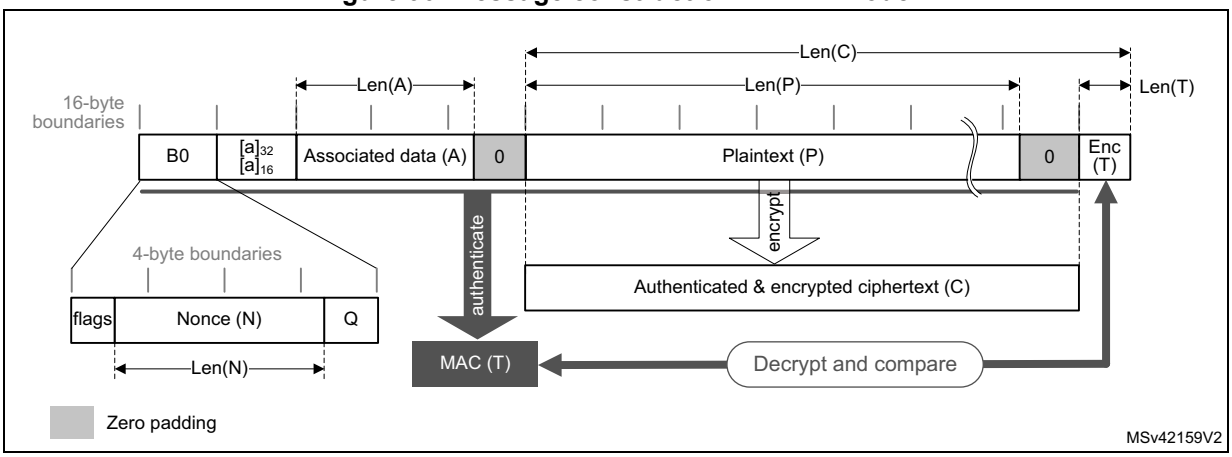

The structure of the message is:

- **16-byte first authentication block (B0)**, composed of three distinct fields:
  - **Q:** a bit string representation of the octet length of P (Len(P))
  - **Nonce (N):** a single-use value (that is, a new nonce must be assigned to each new communication) of Len(N) size. The sum Len(N) + Len(P) must be equal to 15 bytes.
  - **Flags:** most significant octet containing four flags for control information, as specified by the standard. It contains two 3-bit strings to encode the values **t** (MAC length expressed in bytes) and **Q** (plaintext length such that Len(P) < 2^{8q} bytes). The counter blocks range associated to **Q** is equal to 2^{8Q-4}, that is, if the maximum value of **Q** is 8, the counter blocks used in cipher must be on 60 bits.
- **16-byte blocks (B)** associated to the Associated Data (A).
  This part of the message is only authenticated, not encrypted. This section has a

known length Len(A) that can be a non-multiple of 16 bytes (see *Figure 90*). The standard also states that, on MSB bits of the first message block (B1), the associated data length expressed in bytes (a) must be encoded as follows:

– If $0 < a < 2^{16} - 2^{8}$, then it is encoded as $[a]_{16}$, that is, on two bytes.
– If $2^{16} - 2^{8} < a < 2^{32}$, then it is encoded as 0xff || 0xfe || $[a]_{32}$, that is, on six bytes.
– If $2^{32} < a < 2^{64}$, then it is encoded as 0xff || 0xff || $[a]_{64}$, that is, on ten bytes.

- **16-byte blocks (B)** associated to the plaintext message P, which is both authenticated and encrypted as ciphertext C, with a known length Len(P). This length can be a non-multiple of 16 bytes (see *Figure 90*).
- **Encrypted MAC (T)** of length Len(T) appended to the ciphertext C of overall length Len(C).

When a part of the message (A or P) has a length that is a non-multiple of 16-bytes, a special padding scheme is required.

Note: CCM chaining mode can also be used with associated data only (that is, no payload).

As an example, the C.1 section in NIST Special Publication 800-38C gives the following values (hexadecimal numbers):

N: 10111213 141516 (Len(N) = 56 bits or 7 bytes)

A: 00010203 04050607 (Len(A) = 64 bits or 8 bytes)

P: 20212223 (Len(P) = 32 bits or 4 bytes)

T: 6084341B (Len(T) = 32 bits or t = 4)

B0: 4F101112 13141516 00000000 00000004
B1: 00080001 02030405 06070000 00000000
B2: 20212223 00000000 00000000 00000000

CTR0: 0710111213 141516 00000000 00000000

CTR1: 0710111213 141516 00000000 00000001

Generation of formatted input data blocks Bx (especially B0 and B1) must be managed by the application.

CCM processing

Figure 91 describes the CCM implementation within the AES peripheral (encryption example). This mode is selected by writing 100 into the CHMOD[2:0] bitfield of the AES_CR register.

Figure 91. CCM mode authenticated encryption

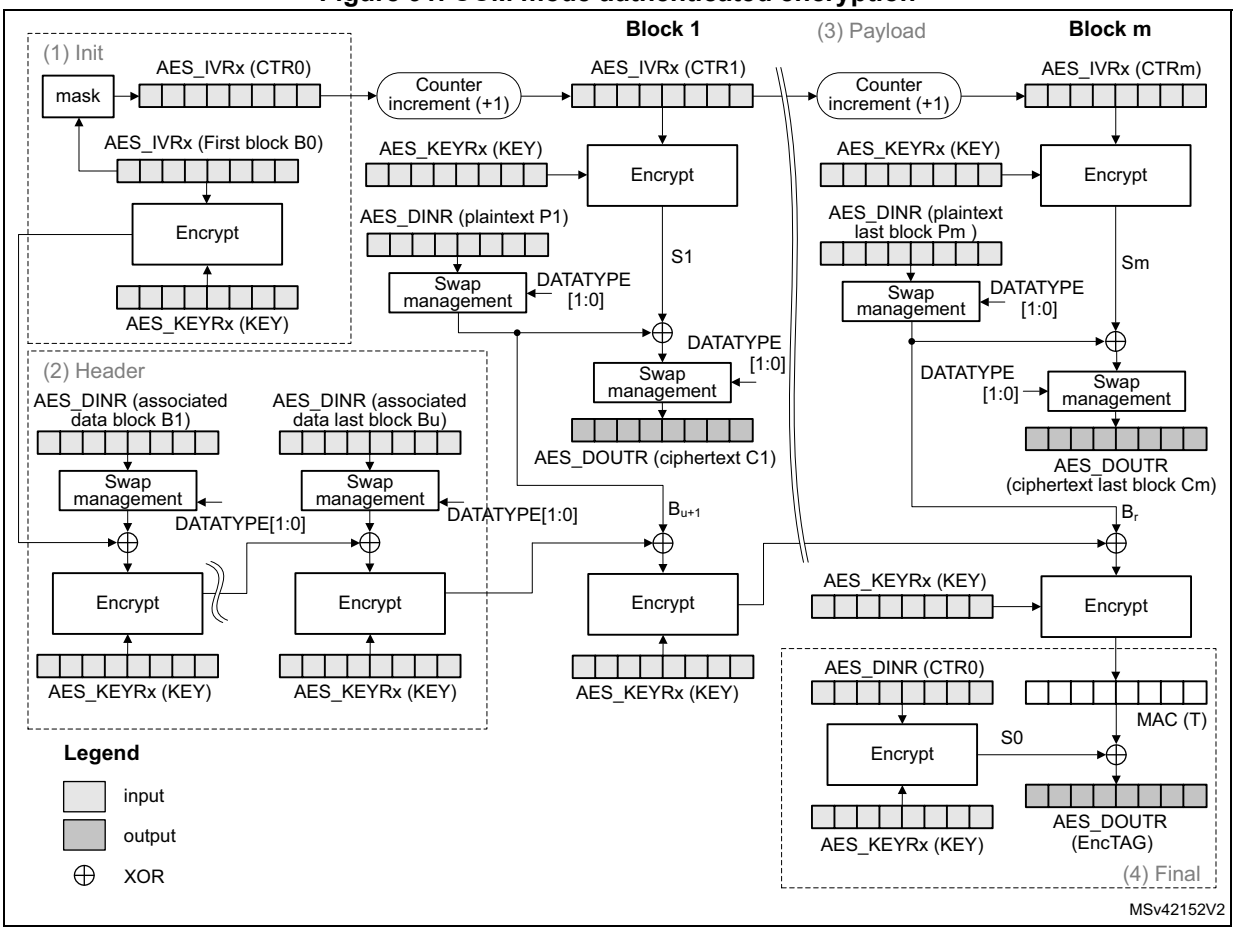

The data input to the generation-encryption process are a valid nonce, a valid payload string, and a valid associated data string, all properly formatted. The CBC chaining mechanism is applied to the formatted plaintext data to generate a MAC, with a known length. Counter mode encryption that requires a sufficiently long sequence of counter blocks as input, is applied to the payload string and separately to the MAC. The resulting ciphertext C is the output of the generation-encryption process on plaintext P.

AES_IVRx registers are used for processing each data block, AES automatically incrementing the CTR counter with a bit length defined by the first block B0. *Table 94* shows how the application must load the B0 data.

Note: The AES peripheral in CCM mode supports counters up to 64 bits, as specified by NIST.

Table 94. Initialization of AES_IVRx registers in CCM mode

AES_IVR3[31:0]	AES_IVR2[31:0]	AES_IVR1[31:0]	AES_IVR0[31:0]
B0[127:96]	B0[95:64]	B0[63:32]	B0[31:0]

Note: In this mode, the settings 01 and 11 of the MODE[1:0] bitfield are forbidden.

A CCM message is processed through the following phases, further described in next subsections:

- **Init phase**: AES processes the first block and prepares the first counter block.
- **Header phase**: AES processes associated data (A), with tag computation only.
- **Payload phase**: IP processes plaintext (P), with tag computation, counter block encryption, and data XOR-ing. It works in a similar way for ciphertext (C).
- **Final phase**: AES generates the message authentication code (MAC).

CCM Init phase

In this phase, the first block B0 of the CCM message is written into the AES_IVRx register. The AES_DOUTR register does not contain any output data. The recommended sequence is:

1. Disable the AES peripheral by clearing the EN bit of the AES_CR register.
2. Select CCM chaining mode, by setting to 100 the CHMOD[2:0] bitfield of the AES_CR register, and optionally, set the DATATYPE[1:0] bitfield.
3. Indicate the Init phase, by setting to 00 the GCMPH[1:0] bitfield of the AES_CR register.
4. Set the MODE[1:0] bitfield of the AES_CR register to 00 or 10. Although the bitfield is only used in payload phase, it is recommended to set it in the Init phase and keep it unchanged in all subsequent phases.
5. Initialize the AES_KEYRx registers with a key, and initialize AES_IVRx registers with B0 data as described in *Table 94*.
6. Start the calculation of the counter, by setting to 1 the EN bit of the AES_CR register (EN is automatically reset when the calculation finishes).
7. Wait until the end of computation, indicated by the CCF flag of the AES_SR transiting to 1. Alternatively, use the corresponding interrupt.
8. Clear the CCF flag in the AES_SR register, by setting to 1 the CCFC bit of the AES_CR register.

CCM header phase

This phase coming after the GCM Init phase must be completed before the payload phase. During this phase, the AES_DOUTR register does not contain any output data.

The sequence to execute, identical for encryption and decryption, is:

1. Indicate the header phase, by setting to 01 the GCMPH[1:0] bitfield of the AES_CR register. Do not modify the MODE[1:0] bitfield as set in the Init phase.
2. Enable the AES peripheral by setting the EN bit of the AES_CR register.
3. If it is the last block and the AAD size in the block is inferior to 128 bits, pad the remainder of the block with zeros. Then append the data block into AES in one of ways described in *Section 19.4.4: AES procedure to perform a cipher operation*. No data is read during this phase.
4. Repeat the step *3* until the last additional authenticated data block is processed.

Note: The header phase can be skipped if there is no associated data, that is, Len(A) = 0.

The first block of the associated data (B1) must be formatted by software, with the associated data length.

CCM payload phase (encryption or decryption)

This phase, identical for encryption and decryption, is executed after the CCM header phase. During this phase, the encrypted/decrypted payload is stored in the AES_DOUTR register. The sequence to execute is:

1. Indicate the payload phase, by setting to 10 the GCMPH[1:0] bitfield of the AES_CR register. Do not modify the MODE[1:0] bitfield as set in the Init phase.
2. If the header phase was skipped, enable the AES peripheral by setting the EN bit of the AES_CR register.
3. If it is the last data block to encrypt and the plaintext size in the block is inferior to 128 bits, pad the remainder of the block with zeros.
4. Append the data block into AES in one of ways described in *Section 19.4.4: AES procedure to perform a cipher operation on page 453*, and read the result.
5. Repeat the previous step till the second-last plaintext block is encrypted or till the last block of ciphertext is decrypted. For the last block of plaintext (encryption only), apply the two previous steps. For the last block, discard the data that is not part of the payload when the last block size is less than 16 bytes.

Note: The payload phase can be skipped if there is no payload data, that is, Len(P) = 0 or Len(C) = Len(T).

Remove $LSB_{Len(T)}(C)$ encrypted tag information when decrypting ciphertext C.

CCM final phase

In this last phase, the AES peripheral generates the GCM authentication tag and stores it in the AES_DOUTR register. The sequence to execute is:

1. Indicate the final phase, by setting to 11 the GCMPH[1:0] bitfield of the AES_CR register.
2. Wait until the end-of-computation flag CCF of the AES_SR register is set.
3. Read four times the AES_DOUTR register: the output corresponds to the CCM authentication tag.
4. Clear the CCF flag of the AES_SR register by setting the CCFC bit of the AES_CR register.
5. Disable the AES peripheral, by clearing the EN bit of the AES_CR register.
6. For authenticated decryption, compare the generated encrypted tag with the encrypted tag padded in the ciphertext.

Note: In this final phase, swapping is applied to tag data read from AES_DOUTR register.

When transiting from the header phase to the final phase, the AES peripheral must not be disabled, otherwise the result is wrong.

Application must mask the authentication tag output with tag length to obtain a valid tag.

Suspend/resume operations in CCM mode

To suspend the processing of a message in header or payload phase, proceed as follows:

1. If DMA is used, stop the AES DMA transfers to the IN FIFO by clearing the DMAINEN bit of the AES_CR register. If DMA is not used, make sure that the current computation is completed, which is indicated by the CCF flag of the AES_SR register set to 1.
2. In the payload phase, if DMA is not used, read four times the AES_DOUTR register to save the last-processed block. If DMA is used, wait until the CCF flag is set in the

AES_SR register then stop the DMA transfers from the OUT FIFO by clearing the DMAOUTEN bit of the AES_CR register.

3. Clear the CCF flag of the AES_SR register, by setting to 1 the CCFC bit of the AES_CR register.
4. Save the AES_SUSPxR registers (where x is from 0 to 7) in the memory.
5. Save the AES_IVRx registers as, during the data processing, they changed from their initial values.
6. Disable the AES peripheral, by clearing the EN bit of the AES_CR register.
7. Save the current AES configuration in the memory, excluding the initialization vector registers AES_IVRx. Key registers do not need to be saved as the original key value is known by the application.
8. If DMA is used, save the DMA controller status (pointers for IN data transfers, number of remaining bytes, and so on). In the payload phase, pointers for OUT data transfers must also be saved.

To resume the processing of a message, proceed as follows:

1. If DMA is used, configure the DMA controller in order to complete the rest of the FIFO IN transfers. In the payload phase, the rest of the FIFO OUT transfers must also be configured in the DMA controller.
2. Disable the AES peripheral by clearing the EN bit of the AES_CR register.
3. Write the suspend register values, previously saved in the memory, back into their corresponding AES_SUSPxR registers (where x is from 0 to 7).
4. Write the initialization vector register values, previously saved in the memory, back into their corresponding AES_IVRx registers.
5. Restore the initial setting values in the AES_CR and AES_KEYRx registers.
6. Enable the AES peripheral by setting the EN bit of the AES_CR register.
7. If DMA is used, enable AES DMA requests by setting to 1 the DMAINEN bit (and DMAOUTEN bit if in payload phase) of the AES_CR register.

19.4.13 AES data registers and data swapping

Data input and output

A 128-bit data block is entered into the AES peripheral with four successive 32-bit word writes into the AES_DINR register (bitfield DIN[31:0]), the most significant word (bits [127:96]) first, the least significant word (bits [31:0]) last.

A 128-bit data block is retrieved from the AES peripheral with four successive 32-bit word reads from the AES_DOUTR register (bitfield DOUT[31:0]), the most significant word (bits [127:96]) first, the least significant word (bits [31:0]) last.

The 32-bit data word for AES_DINR register or from AES_DOUTR register is organized in big endian order, that is:

- the most significant byte of a word to write into AES_DINR must be put on the lowest address out of the four adjacent memory locations keeping the word to write, or
- the most significant byte of a word read from AES_DOUTR goes to the lowest address out of the four adjacent memory locations receiving the word

For using DMA for input data block write into AES, the four words of the input block must be stored in the memory consecutively and in big-endian order, that is, the most significant word on the lowest address. See *Section 19.4.16: AES DMA interface*.

Data swapping

The AES peripheral can be configured to perform a bit-, a byte-, a half-word-, or no swapping on the input data word in the AES_DINR register, before loading it to the AES processing core, and on the data output from the AES processing core, before sending it to the AES_DOUTR register. The choice depends on the type of data. For example, a byte swapping is used for an ASCII text stream.

The data swap type is selected through the DATATYPE[1:0] bitfield of the AES_CR register. The selection applies both to the input and the output of the AES core.

For different data swap types, *Figure 92* shows the construction of AES processing core input buffer data P127 to P0, from the input data entered through the AES_DINR register, or the construction of the output data available through the AES_DOUTR register, from the AES processing core output buffer data P127 to P0.

Figure 92. 128-bit block construction with respect to data swap

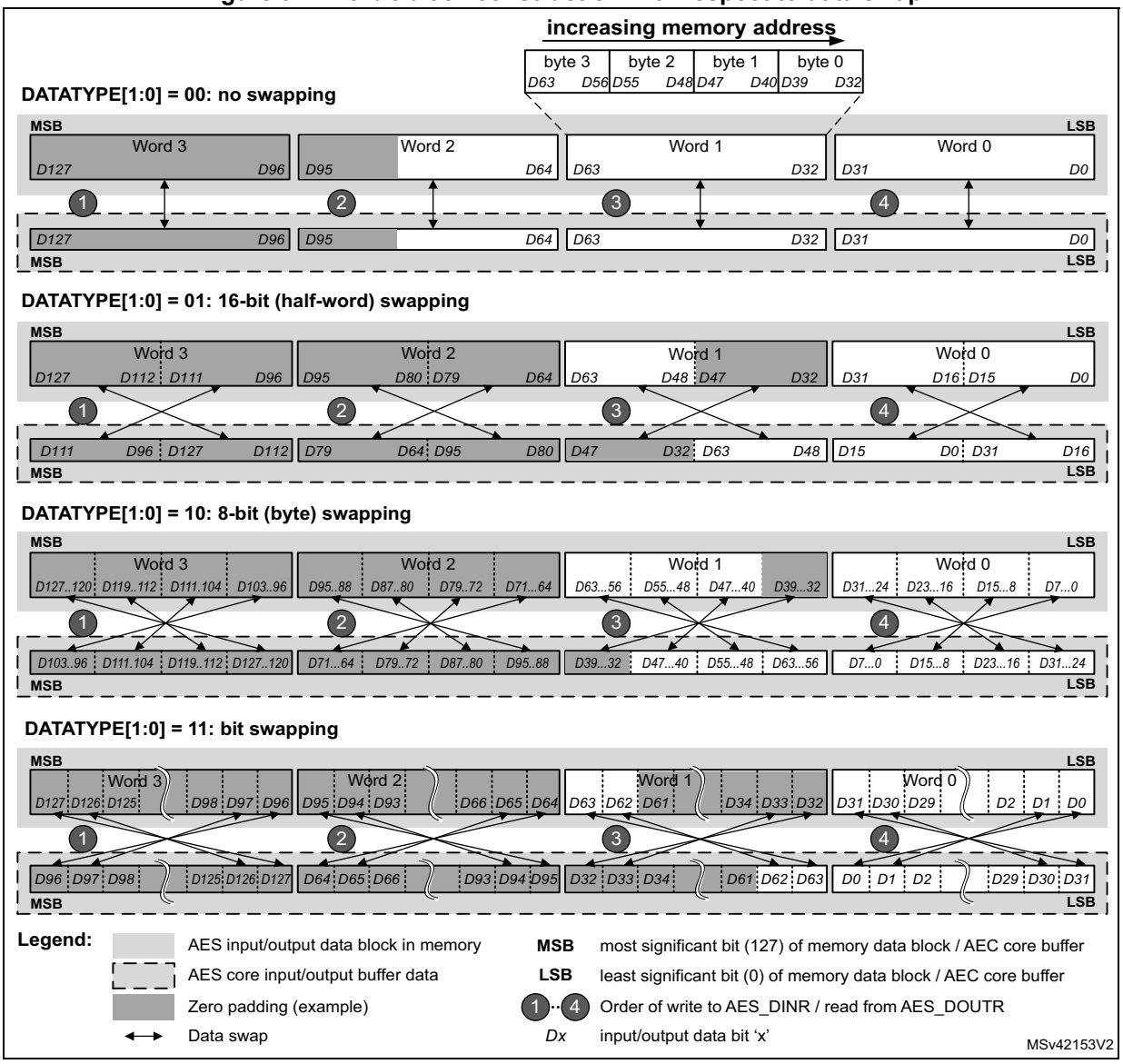

Note: The data in AES key registers (AES_KEYRx) and initialization registers (AES_IVRx) are not sensitive to the swap mode selection.

Data padding

Figure 92 also gives an example of memory data block padding with zeros such that the zeroed bits after the data swap form a contiguous zone at the MSB end of the AES core input buffer. The example shows the padding of an input data block containing:

- 48 message bits, with DATATYPE[1:0] = 01
- 56 message bits, with DATATYPE[1:0] = 10
- 34 message bits, with DATATYPE[1:0] = 11

19.4.14 AES key registers

The AES_KEYRx registers store the encryption or decryption key bitfield KEY[127:0] or KEY[255:0]. The data to write to or to read from each register is organized in the memory in little-endian order, that is, with most significant byte on the highest address.

The key is spread over eight registers as shown in *Table 95*.

Table 95. Key endianness in AES_KEYRx registers (128- or 256-bit key length)

AES_KEYR7 [31:0]	AES_KEYR6 [31:0]	AES_KEYR5 [31:0]	AES_KEYR4 [31:0]	AES_KEYR3 [31:0]	AES_KEYR2 [31:0]	AES_KEYR1 [31:0]	AES_KEYR0 [31:0]
-	-	-	-	KEY[127:96]	KEY[95:64]	KEY[63:32]	KEY[31:0]
KEY[255:224]	KEY[223:192]	KEY[191:160]	KEY[159:128]	KEY[127:96]	KEY[95:64]	KEY[63:32]	KEY[31:0]

The key for encryption or decryption may be written into these registers when the AES peripheral is disabled, by clearing the EN bit of the AES_CR register.

The key registers are not affected by the data swapping controlled by DATATYPE[1:0] bitfield of the AES_CR register.

19.4.15 AES initialization vector registers

The four AES_IVRx registers keep the initialization vector input bitfield IVI[127:0]. The data to write to or to read from each register is organized in the memory in little-endian order, that is, with most significant byte on the highest address. The registers are also ordered from lowest address (AES_IVR0) to highest address (AES_IVR3).

The signification of data in the bitfield depends on the chaining mode selected. When used, the bitfield is updated upon each computation cycle of the AES core.

Write operations to the AES_IVRx registers when the AES peripheral is enabled have no effect to the register contents. For modifying the contents of the AES_IVRx registers, the EN bit of the AES_CR register must first be cleared.

Reading the AES_IVRx registers returns the latest counter value (useful for managing suspend mode).

The AES_IVRx registers are not affected by the data swapping feature controlled by the DATATYPE[1:0] bitfield of the AES_CR register.

19.4.16 AES DMA interface

The AES peripheral provides an interface to connect to the DMA (direct memory access) controller. The DMA operation is controlled through the AES_CR register.

Data input using DMA

Setting the DMAINEN bit of the AES_CR register enables DMA writing into AES. The AES peripheral then initiates a DMA request during the input phase each time it requires to write a 128-bit block (quadruple word) to the AES_DINR register, as shown in *Figure 93*.

Note: According to the algorithm and the mode selected, special padding / ciphertext stealing might be required. For example, in case of AES GCM encryption or AES CCM decryption, a DMA transfer must not include the last block. For details, refer to Section 19.4.4: AES procedure to perform a cipher operation.

Figure 93. DMA transfer of a 128-bit data block during input phase

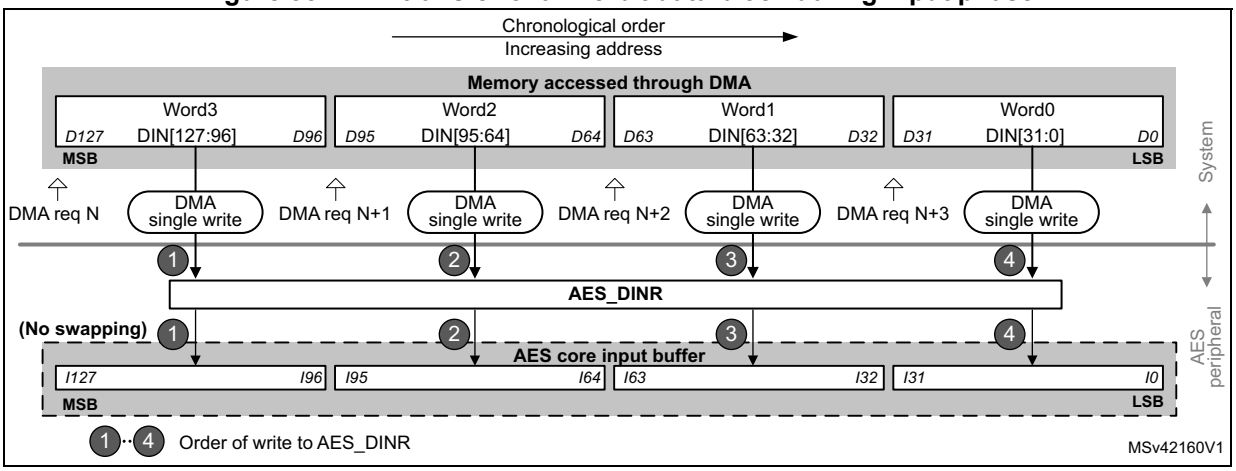

Data output using DMA

Setting the DMAOUTEN bit of the AES_CR register enables DMA reading from AES. The AES peripheral then initiates a DMA request during the Output phase each time it requires to read a 128-bit block (quadruple word) to the AES_DINR register, as shown in *Figure 94*.

Note: According to the message size, extra bytes might need to be discarded by application in the last block.

Figure 94. DMA transfer of a 128-bit data block during output phase

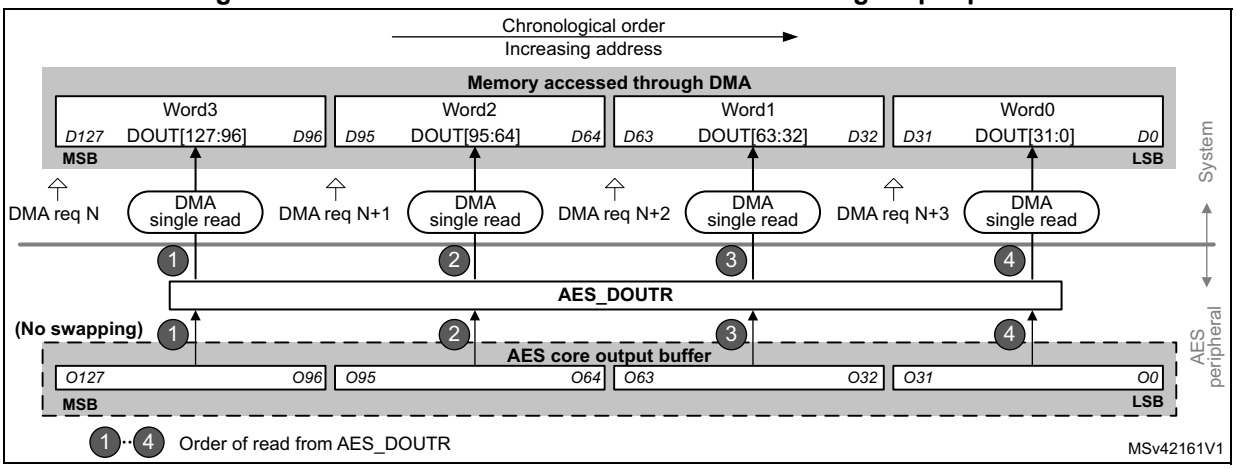

DMA operation in different operating modes

DMA operations are usable when Mode 1 (encryption) or Mode 3 (decryption) are selected via the MODE[1:0] bitfield of the register AES_CR. As in Mode 2 (key derivation) the AES_KEYRx registers must be written by software, enabling the DMA transfer through the DMAINEN and DMAOUTEN bits of the AES_CR register have no effect in that mode.

DMA single requests are generated by AES until it is disabled. So, after the data output phase at the end of processing of a 128-bit data block, AES switches automatically to a new data input phase for the next data block, if any.

When the data transferring between AES and memory is managed by DMA, the CCF flag has no use because the reading of the AES_DOUTR register is managed by DMA automatically at the end of the computation phase. The CCF flag must only be cleared when transiting back to data transferring managed by software. See *Section 19.4.4: AES procedure to perform a cipher operation*, subsection *Data append*, for details.

19.4.17 AES error management

AES configuration can be changed at any moment by clearing the EN bit of the AES_CR register.

Read error flag (RDERR)

Unexpected read attempt of the AES_DOUTR register sets the RDERR flag of the AES_SR register, and returns zero.

RDERR is triggered during the computation phase or during the input phase.

Note: AES is not disabled upon a RDERR error detection and continues processing.

An interrupt is generated if the ERRIE bit of the AES_CR register is set. For more details, refer to *Section 19.5: AES interrupts*.

The RDERR flag is cleared by setting the ERRIE bit of the AES_CR register.

Write error flag (WDERR)

Unexpected write attempt of the AES_DINR register sets the WRERR flag of the AES_SR register, and has no effect on the AES_DINR register. The WRERR is triggered during the computation phase or during the output phase.

Note: AES is not disabled after a WRERR error detection and continues processing.

An interrupt is generated if the ERRIE bit of the AES_CR register is set. For more details, refer to *Section 19.5: AES interrupts*.

The WRERR flag is cleared by setting the ERRC bit of the AES_CR register.

19.5 AES interrupts

Individual maskable interrupt sources generated by the AES peripheral signal the following events:

- computation completed
- read error
- write error

These sources are combined into a common interrupt signal from the AES peripheral that connects to the Arm® Cortex® interrupt controller. Each can individually be enabled/disabled, by setting/clearing the corresponding enable bit of the AES_CR register, and cleared by setting the corresponding bit of the AES_CR register.

The status of each can be read from the AES_SR register.

Table 96 gives a summary of the interrupt sources, their event flags and enable bits.

Table 96. AES interrupt requests

Interrupt acronym	AES interrupt event	Event flag	Enable bit	Interrupt clear method
AES	computation completed flag	CCF	CCFIE	set CCFC(1)
	read error flag	RDERR	ERRIE	set ERRC(1)
	write error flag	WRERR		

1. Bit of the AES_CR register.

19.6 AES processing latency

The tables below summarize the latency to process a 128-bit block for each mode of operation.

Table 97. Processing latency for ECB, CBC and CTR

Key size	Mode of operation	Algorithm	Clock cycles
128-bit	Mode 1: Encryption	ECB, CBC, CTR	51
	Mode 2: Key derivation	-	59
	Mode 3: Decryption	ECB, CBC, CTR	51
	Mode 4: Key derivation then decryption	ECB, CBC	106

Table 97. Processing latency for ECB, CBC and CTR (continued)

Key size	Mode of operation	Algorithm	Clock cycles
256-bit	Mode 1: Encryption	ECB, CBC, CTR	75
	Mode 2: Key derivation	-	82
	Mode 3: Decryption	ECB, CBC, CTR	75
	Mode 4: Key derivation then decryption	ECB, CBC	145

Table 98. Processing latency for GCM and CCM (in clock cycles)

Key size	Mode of operation	Algorithm	Init Phase	Header phase(1)	Payload phase(1)	Tag phase(1)
128-bit	Mode 1: Encryption/ Mode 3: Decryption	GCM	64	35	51	59
		CCM	63	55	114	58
256-bit	Mode 1: Encryption/ Mode 3: Decryption	GCM	88	35	75	75
		CCM	87	79	162	82

1. Data insertion can include wait states forced by AES on the AHB bus (maximum 3 cycles, typical 1 cycle).

19.7 AES registers

19.7.1 AES control register (AES_CR)

Address offset: 0x00

Reset value: 0x0000 0000

31	30	29	28	27	26	25	24	23	22	21	20	19	18	17	16
Res.	Res.	Res.	Res.	Res.	Res.	Res.	Res.	NPBLB[3:0]				Res.	KEYSIZE	Res.	CHMOD[2]
								rw	rw	rw	rw		rw		rw

15	14	13	12	11	10	9	8	7	6	5	4	3	2	1	0
Res.	GCMPH[1:0]		DMAOUTEN	DMAINEN	ERRIE	CCFIE	ERRC	CCFC	CHMOD[1:0]		MODE[1:0]		DATATYPE[1:0]		EN
	rw	rw	rw	rw	rw	rw	rw	rw	rw	rw	rw	rw	rw	rw	rw

Bits 31:24 Reserved, must be kept at reset value.

Bits 23:20 **NPBLB[3:0]:** Number of padding bytes in last block

The bitfield sets the number of padding bytes in last block of payload:
0000: All bytes are valid (no padding)
0001: Padding for one least-significant byte of last block
...
1111: Padding for 15 least-significant bytes of last block

Bit 19 Reserved, must be kept at reset value.

Bit 18 **KEYSIZE:** Key size selection

This bitfield defines the length of the key used in the AES cryptographic core, in bits:
0: 128
1: 256
Attempts to write the bit are ignored when the EN bit of the AES_CR register is set before the write access and it is not cleared by that write access.

Bit 17 Reserved, must be kept at reset value.

Bit 15 Reserved, must be kept at reset value.

Bits 14:13 **GCMPH[1:0]:** GCM or CCM phase selection

This bitfield selects the phase of GCM, GMAC or CCM algorithm:
00: Init phase
01: Header phase
10: Payload phase
11: Final phase
The bitfield has no effect if other than GCM, GMAC or CCM algorithms are selected (through the ALGOMODE bitfield).

Bit 12 **DMAOUTEN**: DMA output enable

This bit enables/disables data transferring with DMA, in the output phase:
0: Disable
1: Enable
When the bit is set, DMA requests are automatically generated by AES during the output data phase. This feature is only effective when Mode 1 or Mode 3 is selected through the MODE[1:0] bitfield. It is not effective for Mode 2 (key derivation).
Use of DMA with Mode 4 (single decryption) is not recommended.

Bit 11 **DMAINEN**: DMA input enable

This bit enables/disables data transferring with DMA, in the input phase:
0: Disable
1: Enable
When the bit is set, DMA requests are automatically generated by AES during the input data phase. This feature is only effective when Mode 1 or Mode 3 is selected through the MODE[1:0] bitfield. It is not effective for Mode 2 (key derivation).
Use of DMA with Mode 4 (single decryption) is not recommended.

Bit 10 **ERRIE**: Error interrupt enable

This bit enables or disables (masks) the AES interrupt generation when RDERR and/or WRERR is set:
0: Disable (mask)
1: Enable

Bit 9 **CCFIE**: CCF interrupt enable

This bit enables or disables (masks) the AES interrupt generation when CCF (computation complete flag) is set:
0: Disable (mask)
1: Enable

Bit 8 **ERRC**: Error flag clear

Upon written to 1, this bit clears the RDERR and WRERR error flags in the AES_SR register:
0: No effect
1: Clear RDERR and WRERR flags
Reading the flag always returns zero.

Bit 7 **CCFC:** Computation complete flag clear

Upon written to 1, this bit clears the computation complete flag (CCF) in the AES_SR register:
0: No effect
1: Clear CCF
Reading the flag always returns zero.

Bits 16, 6:5 **CHMOD[2:0]**: Chaining mode selection

This bitfield selects the AES chaining mode:
000: Electronic codebook (ECB)
001: Cipher-block chaining (CBC)
010: Counter mode (CTR)
011: Galois counter mode (GCM) and Galois message authentication code (GMAC)
100: Counter with CBC-MAC (CCM)
others: Reserved
Attempts to write the bitfield are ignored when the EN bit of the AES_CR register is set before the write access and it is not cleared by that write access.

Bits 4:3 **MODE[1:0]**: AES operating mode

This bitfield selects the AES operating mode:
00: Mode 1: encryption
01: Mode 2: key derivation (or key preparation for ECB/CBC decryption)
10: Mode 3: decryption
11: Mode 4: key derivation then single decryption
Attempts to write the bitfield are ignored when the EN bit of the AES_CR register is set before the write access and it is not cleared by that write access. Any attempt to selecting Mode 4 while either ECB or CBC chaining mode is not selected, defaults to effective selection of Mode 3. It is not possible to select a Mode 3 following a Mode 4.

Bits 2:1 **DATATYPE[1:0]**: Data type selection

This bitfield defines the format of data written in the AES_DINR register or read from the AES_DOUTR register, through selecting the mode of data swapping:
00: None
01: Half-word (16-bit)
10: Byte (8-bit)
11: Bit
For more details, refer to *Section 19.4.13: AES data registers and data swapping*.
Attempts to write the bitfield are ignored when the EN bit of the AES_CR register is set before the write access and it is not cleared by that write access.

Bit 0 **EN**: AES enable

This bit enables/disables the AES peripheral:
0: Disable
1: Enable
At any moment, clearing then setting the bit re-initializes the AES peripheral.
This bit is automatically cleared by hardware upon the completion of the key preparation (Mode 2) and upon the completion of GCM/GMAC/CCM initial phase.

19.7.2 AES status register (AES_SR)

Address offset: 0x04

Reset value: 0x0000 0000

31	30	29	28	27	26	25	24	23	22	21	20	19	18	17	16
Res.	Res.	Res.	Res.	Res.	Res.	Res.	Res.	Res.	Res.	Res.	Res.	Res.	Res.	Res.	Res.

15	14	13	12	11	10	9	8	7	6	5	4	3	2	1	0
Res.	Res.	Res.	Res.	Res.	Res.	Res.	Res.	Res.	Res.	Res.	Res.	BUSY	WRERR	RDERR	CCF
												r	r	r	r

Bits 31:4 Reserved, must be kept at reset value.

Bit 3 **BUSY:** Busy

This flag indicates whether AES is idle or busy during GCM payload **encryption** phase:
0: Idle
1: Busy
When the flag indicates “idle”, the current GCM encryption processing may be suspended to process a higher-priority message. In other chaining modes, or in GCM phases other than payload encryption, the flag must be ignored for the suspend process.

Bit 2 **WRERR**: Write error

This flag indicates the detection of an unexpected write operation to the AES_DINR register (during computation or data output phase):
0: Not detected
1: Detected
The flag is set by hardware. It is cleared by software upon setting the ERRC bit of the AES_CR register.
Upon the flag setting, an interrupt is generated if enabled through the ERRIE bit of the AES_CR register.
The flag setting has no impact on the AES operation. Unexpected write is ignored.

Bit 1 **RDERR**: Read error flag

This flag indicates the detection of an unexpected read operation from the AES_DOUTR register (during computation or data input phase):
0: Not detected
1: Detected
The flag is set by hardware. It is cleared by software upon setting the ERRC bit of the AES_CR register.
Upon the flag setting, an interrupt is generated if enabled through the ERRIE bit of the AES_CR register.
The flag setting has no impact on the AES operation. Unexpected read returns zero.

Bit 0 **CCF**: Computation completed flag

This flag indicates whether the computation is completed:
0: Not completed
1: Completed
The flag is set by hardware upon the completion of the computation. It is cleared by software, upon setting the CCFC bit of the AES_CR register.
Upon the flag setting, an interrupt is generated if enabled through the CCFIE bit of the AES_CR register.
The flag is significant only when the DMAOUTEN bit is 0. It may stay high when DMA_EN is 1.

19.7.3 AES data input register (AES_DINR)

Address offset: 0x08

Reset value: 0x0000 0000

Only 32-bit access type is supported.

31	30	29	28	27	26	25	24	23	22	21	20	19	18	17	16
DIN[31:16]															
rw	rw	rw	rw	rw	rw	rw	rw	rw	rw	rw	rw	rw	rw	rw	rw
15	14	13	12	11	10	9	8	7	6	5	4	3	2	1	0
DIN[15:0]															
rw	rw	rw	rw	rw	rw	rw	rw	rw	rw	rw	rw	rw	rw	rw	rw

Bits 31:0 **DIN[31:0]**: Input data word

A four-fold sequential write to this bitfield during the input phase results in writing a complete 128-bit block of input data to the AES peripheral. From the first to the fourth write, the corresponding data weights are [127:96], [95:64], [63:32], and [31:0]. Upon each write, the data from the 32-bit input buffer are handled by the data swap block according to the DATATYPE[1:0] bitfield, then written into the AES core 128-bit input buffer.

The data signification of the input data block depends on the AES operating mode:

- **Mode 1** (encryption): plaintext
- **Mode 2** (key derivation): the bitfield is not used (AES_KEYRx registers used for input)
- **Mode 3** (decryption) and **Mode 4** (key derivation then single decryption): ciphertext

The data swap operation is described in *Section 19.4.13: AES data registers and data swapping on page 477*.

19.7.4 AES data output register (AES_DOUTR)

Address offset: 0x0C

Reset value: 0x0000 0000

Only 32-bit read access type is supported.

31	30	29	28	27	26	25	24	23	22	21	20	19	18	17	16
DOUT[31:16]															
r	r	r	r	r	r	r	r	r	r	r	r	r	r	r	r
15	14	13	12	11	10	9	8	7	6	5	4	3	2	1	0
DOUT[15:0]															
r	r	r	r	r	r	r	r	r	r	r	r	r	r	r	r

Bits 31:0 **DOUT[31:0]**: Output data word

This read-only bitfield fetches a 32-bit output buffer. A four-fold sequential read of this bitfield, upon the computation completion (CCF set), virtually reads a complete 128-bit block of output data from the AES peripheral. Before reaching the output buffer, the data produced by the AES core are handled by the data swap block according to the DATATYPE[1:0] bitfield.

Data weights from the first to the fourth read operation are: [127:96], [95:64], [63:32], and [31:0].

The data signification of the output data block depends on the AES operating mode:

- **Mode 1** (encryption): ciphertext
- **Mode 2** (key derivation): the bitfield is not used (AES_KEYRx registers used for output)
- **Mode 3** (decryption) and **Mode 4** (key derivation then single decryption): plaintext

The data swap operation is described in *Section 19.4.13: AES data registers and data swapping on page 477*.

19.7.5 AES key register 0 (AES_KEYR0)

Address offset: 0x10

Reset value: 0x0000 0000

31	30	29	28	27	26	25	24	23	22	21	20	19	18	17	16
KEY[31:16]															
rw	rw	rw	rw	rw	rw	rw	rw	rw	rw	rw	rw	rw	rw	rw	rw
15	14	13	12	11	10	9	8	7	6	5	4	3	2	1	0
KEY[15:0]															
rw	rw	rw	rw	rw	rw	rw	rw	rw	rw	rw	rw	rw	rw	rw	rw

Bits 31:0 **KEY[31:0]**: Cryptographic key, bits [31:0]

This bitfield contains the bits [31:0] of the AES encryption or decryption key, depending on the operating mode:

- In **Mode 1** (encryption), **Mode 2** (key derivation) and **Mode 4** (key derivation then single decryption): the value to write into the bitfield is the encryption key.
- In **Mode 3** (decryption): the value to write into the bitfield is the encryption key to be derived before being used for decryption. After writing the encryption key into the bitfield, its reading before enabling AES returns the same value. Its reading after enabling AES and after the CCF flag is set returns the decryption key derived from the encryption key.

Note: In mode 4 (key derivation then single decryption) the bitfield always contains the encryption key.

The AES_KEYRx registers may be written only when KEYSIZE value is correct and when the AES peripheral is disabled (EN bit of the AES_CR register cleared). Note that, if, the key is directly loaded to AES_KEYRx registers (hence writes to key register is ignored and KEIF is set).

Refer to *Section 19.4.14: AES key registers on page 479* for more details.

19.7.6 AES key register 1 (AES_KEYR1)

Address offset: 0x14

Reset value: 0x0000 0000

31	30	29	28	27	26	25	24	23	22	21	20	19	18	17	16
KEY[63:48]															
rw	rw	rw	rw	rw	rw	rw	rw	rw	rw	rw	rw	rw	rw	rw	rw
15	14	13	12	11	10	9	8	7	6	5	4	3	2	1	0
KEY[47:32]															
rw	rw	rw	rw	rw	rw	rw	rw	rw	rw	rw	rw	rw	rw	rw	rw

Bits 31:0 **KEY[63:32]**: Cryptographic key, bits [63:32]
Refer to the AES_KEYR0 register for description of the KEY[255:0] bitfield.

19.7.7 AES key register 2 (AES_KEYR2)

Address offset: 0x18

Reset value: 0x0000 0000

31	30	29	28	27	26	25	24	23	22	21	20	19	18	17	16
KEY[95:80]															
rw	rw	rw	rw	rw	rw	rw	rw	rw	rw	rw	rw	rw	rw	rw	rw
15	14	13	12	11	10	9	8	7	6	5	4	3	2	1	0
KEY[79:64]															
rw	rw	rw	rw	rw	rw	rw	rw	rw	rw	rw	rw	rw	rw	rw	rw

Bits 31:0 **KEY[95:64]**: Cryptographic key, bits [95:64]
Refer to the AES_KEYR0 register for description of the KEY[255:0] bitfield.

19.7.8 AES key register 3 (AES_KEYR3)

Address offset: 0x1C

Reset value: 0x0000 0000

31	30	29	28	27	26	25	24	23	22	21	20	19	18	17	16
KEY[127:112]															
rw	rw	rw	rw	rw	rw	rw	rw	rw	rw	rw	rw	rw	rw	rw	rw
15	14	13	12	11	10	9	8	7	6	5	4	3	2	1	0
KEY[111:96]															
rw	rw	rw	rw	rw	rw	rw	rw	rw	rw	rw	rw	rw	rw	rw	rw

Bits 31:0 **KEY[127:96]**: Cryptographic key, bits [127:96]
Refer to the AES_KEYR0 register for description of the KEY[255:0] bitfield.

19.7.9 AES initialization vector register 0 (AES_IVR0)

Address offset: 0x20

Reset value: 0x0000 0000

31	30	29	28	27	26	25	24	23	22	21	20	19	18	17	16
IVI[31:16]															
rw	rw	rw	rw	rw	rw	rw	rw	rw	rw	rw	rw	rw	rw	rw	rw
15	14	13	12	11	10	9	8	7	6	5	4	3	2	1	0
IVI[15:0]															
rw	rw	rw	rw	rw	rw	rw	rw	rw	rw	rw	rw	rw	rw	rw	rw

Bits 31:0 **IVI[31:0]**: Initialization vector input, bits [31:0]

Refer to *Section 19.4.15: AES initialization vector registers on page 479* for description of the IVI[127:0] bitfield.

The initialization vector is only used in chaining modes other than ECB.

The AES_IVRx registers may be written only when the AES peripheral is disabled

19.7.10 AES initialization vector register 1 (AES_IVR1)

Address offset: 0x24

Reset value: 0x0000 0000

31	30	29	28	27	26	25	24	23	22	21	20	19	18	17	16
IVI[63:48]															
rw	rw	rw	rw	rw	rw	rw	rw	rw	rw	rw	rw	rw	rw	rw	rw
15	14	13	12	11	10	9	8	7	6	5	4	3	2	1	0
IVI[47:32]															
rw	rw	rw	rw	rw	rw	rw	rw	rw	rw	rw	rw	rw	rw	rw	rw

Bits 31:0 **IVI[63:32]**: Initialization vector input, bits [63:32]

Refer to the AES_IVR0 register for description of the IVI[128:0] bitfield.

19.7.11 AES initialization vector register 2 (AES_IVR2)

Address offset: 0x28

Reset value: 0x0000 0000

31	30	29	28	27	26	25	24	23	22	21	20	19	18	17	16
IVI[95:80]															
rw	rw	rw	rw	rw	rw	rw	rw	rw	rw	rw	rw	rw	rw	rw	rw
15	14	13	12	11	10	9	8	7	6	5	4	3	2	1	0
IVI[79:64]															
rw	rw	rw	rw	rw	rw	rw	rw	rw	rw	rw	rw	rw	rw	rw	rw

Bits 31:0 **IVI[95:64]**: Initialization vector input, bits [95:64]
Refer to the AES_IVR0 register for description of the IVI[128:0] bitfield.

19.7.12 AES initialization vector register 3 (AES_IVR3)

Address offset: 0x2C

Reset value: 0x0000 0000

31	30	29	28	27	26	25	24	23	22	21	20	19	18	17	16
IVI[127:112]															
rw	rw	rw	rw	rw	rw	rw	rw	rw	rw	rw	rw	rw	rw	rw	rw
15	14	13	12	11	10	9	8	7	6	5	4	3	2	1	0
IVI[111:96]															
rw	rw	rw	rw	rw	rw	rw	rw	rw	rw	rw	rw	rw	rw	rw	rw

Bits 31:0 **IVI[127:96]**: Initialization vector input, bits [127:96]
Refer to the AES_IVR0 register for description of the IVI[128:0] bitfield.

19.7.13 AES key register 4 (AES_KEYR4)

Address offset: 0x30

Reset value: 0x0000 0000

31	30	29	28	27	26	25	24	23	22	21	20	19	18	17	16
KEY[159:144]															
rw	rw	rw	rw	rw	rw	rw	rw	rw	rw	rw	rw	rw	rw	rw	rw
15	14	13	12	11	10	9	8	7	6	5	4	3	2	1	0
KEY[143:128]															
rw	rw	rw	rw	rw	rw	rw	rw	rw	rw	rw	rw	rw	rw	rw	rw

Bits 31:0 **KEY[159:128]**: Cryptographic key, bits [159:128]
Refer to the AES_KEYR0 register for description of the KEY[255:0] bitfield.

19.7.14 AES key register 5 (AES_KEYR5)

Address offset: 0x34

Reset value: 0x0000 0000

31	30	29	28	27	26	25	24	23	22	21	20	19	18	17	16
KEY[191:176]															
rw	rw	rw	rw	rw	rw	rw	rw	rw	rw	rw	rw	rw	rw	rw	rw
15	14	13	12	11	10	9	8	7	6	5	4	3	2	1	0
KEY[175:160]															
rw	rw	rw	rw	rw	rw	rw	rw	rw	rw	rw	rw	rw	rw	rw	rw

Bits 31:0 **KEY[191:160]**: Cryptographic key, bits [191:160]
Refer to the AES_KEYR0 register for description of the KEY[255:0] bitfield.

19.7.15 AES key register 6 (AES_KEYR6)

Address offset: 0x38

Reset value: 0x0000 0000

31	30	29	28	27	26	25	24	23	22	21	20	19	18	17	16
KEY[223:208]															
rw	rw	rw	rw	rw	rw	rw	rw	rw	rw	rw	rw	rw	rw	rw	rw
15	14	13	12	11	10	9	8	7	6	5	4	3	2	1	0
KEY[207:192]															
rw	rw	rw	rw	rw	rw	rw	rw	rw	rw	rw	rw	rw	rw	rw	rw

Bits 31:0 **KEY[223:192]**: Cryptographic key, bits [223:192]
Refer to the AES_KEYR0 register for description of the KEY[255:0] bitfield.

19.7.16 AES key register 7 (AES_KEYR7)

Address offset: 0x3C

Reset value: 0x0000 0000

31	30	29	28	27	26	25	24	23	22	21	20	19	18	17	16
KEY[255:240]															
rw	rw	rw	rw	rw	rw	rw	rw	rw	rw	rw	rw	rw	rw	rw	rw
15	14	13	12	11	10	9	8	7	6	5	4	3	2	1	0
KEY[239:224]															
rw	rw	rw	rw	rw	rw	rw	rw	rw	rw	rw	rw	rw	rw	rw	rw

Bits 31:0 **KEY[255:224]**: Cryptographic key, bits [255:224]
Refer to the AES_KEYR0 register for description of the KEY[255:0] bitfield.

Note: The key registers from 4 to 7 are used only when the key length of 256 bits is selected. They have no effect when the key length of 128 bits is selected (only key registers 0 to 3 are used in that case).

19.7.17 AES suspend registers (AES_SUSPxR)

Address offset: 0x040 + 0x4 * x, (x = 0 to 7)

Reset value: 0x0000 0000

These registers contain the complete internal register states of the AES processor when the AES processing of the current task is suspended to process a higher-priority task.

Upon suspend, the software reads and saves the AES_SUSPxR register contents (where x is from 0 to 7) into memory, before using the AES processor for the higher-priority task.

Upon completion, the software restores the saved contents back into the corresponding suspend registers, before resuming the original task.

Note: These registers are used only when GCM, GMAC, or CCM chaining mode is selected.

These registers can be read only when AES is enabled. Reading these registers while AES is disabled returns 0x0000 0000.

31	30	29	28	27	26	25	24	23	22	21	20	19	18	17	16
SUSP[31:16]															
rw	rw	rw	rw	rw	rw	rw	rw	rw	rw	rw	rw	rw	rw	rw	rw
15	14	13	12	11	10	9	8	7	6	5	4	3	2	1	0
SUSP[15:0]															
rw	rw	rw	rw	rw	rw	rw	rw	rw	rw	rw	rw	rw	rw	rw	rw

Bits 31:0 **SUSP[31:0]**: AES suspend

Upon suspend operation, this bitfield of the corresponding AES_SUSPxR register takes the value of one of internal AES registers.

19.7.18 AES register map

Table 99. AES register map and reset values

Offset	Register	31	30	29	28	27	26	25	24	23	22	21	20	19	18	17	16	15	14	13	12	11	10	9	8	7	6	5	4	3	2	1	0
0x000	AES_CR	Res.	Res.	Res.	Res.	Res.	Res.	Res.	Res.	NPBLB[3:0]				Res.	KEYSIZE	Res.	CHMOD[2]	Res.	GCMPH[1:0]		DMAOUTEN	DMAINEN	ERRIE	CCFIE	ERRC	CCFC	CHMOD[1:0]		MODE[1:0]		DATATYPE[1:0]		EN
	Reset value									0	0	0	0		0		0		0	0	0	0	0	0	0	0	0	0	0	0	0	0	0
0x004	AES_SR	Res.	Res.	Res.	Res.	Res.	Res.	Res.	Res.	Res.	Res.	Res.	Res.	Res.	Res.	Res.	Res.	Res.	Res.	Res.	Res.	Res.	Res.	Res.	Res.	Res.	Res.	Res.	Res.	BUSY	WRERR	RDERR	CCF
	Reset value																													0	0	0	0
0x008	AES_DINR	DIN[31:0]																															
	Reset value	0	0	0	0	0	0	0	0	0	0	0	0	0	0	0	0	0	0	0	0	0	0	0	0	0	0	0	0	0	0	0	0
0x00C	AES_DOUTR	DOUT[31:0]																															
	Reset value	0	0	0	0	0	0	0	0	0	0	0	0	0	0	0	0	0	0	0	0	0	0	0	0	0	0	0	0	0	0	0	0
0x010	AES_KEYR0	KEY[31:0]																															
	Reset value	0	0	0	0	0	0	0	0	0	0	0	0	0	0	0	0	0	0	0	0	0	0	0	0	0	0	0	0	0	0	0	0
0x014	AES_KEYR1	KEY[63:32]																															
	Reset value	0	0	0	0	0	0	0	0	0	0	0	0	0	0	0	0	0	0	0	0	0	0	0	0	0	0	0	0	0	0	0	0
0x018	AES_KEYR2	KEY[95:64]																															
	Reset value	0	0	0	0	0	0	0	0	0	0	0	0	0	0	0	0	0	0	0	0	0	0	0	0	0	0	0	0	0	0	0	0
0x01C	AES_KEYR3	KEY[127:96]																															
	Reset value	0	0	0	0	0	0	0	0	0	0	0	0	0	0	0	0	0	0	0	0	0	0	0	0	0	0	0	0	0	0	0	0
0x020	AES_IVR0	IVI[31:0]																															
	Reset value	0	0	0	0	0	0	0	0	0	0	0	0	0	0	0	0	0	0	0	0	0	0	0	0	0	0	0	0	0	0	0	0
0x024	AES_IVR1	IVI[63:32]																															
	Reset value	0	0	0	0	0	0	0	0	0	0	0	0	0	0	0	0	0	0	0	0	0	0	0	0	0	0	0	0	0	0	0	0
0x028	AES_IVR2	IVI[95:64]																															
	Reset value	0	0	0	0	0	0	0	0	0	0	0	0	0	0	0	0	0	0	0	0	0	0	0	0	0	0	0	0	0	0	0	0

Table 99. AES register map and reset values (continued)

Offset	Register	31	30	29	28	27	26	25	24	23	22	21	20	19	18	17	16	15	14	13	12	11	10	9	8	7	6	5	4	3	2	1	0
0x02C	AES_IVR3	IVI[127:96]																															
	Reset value	0	0	0	0	0	0	0	0	0	0	0	0	0	0	0	0	0	0	0	0	0	0	0	0	0	0	0	0	0	0	0	0
0x030	AES_KEYR4	KEY[159:128]																															
	Reset value	0	0	0	0	0	0	0	0	0	0	0	0	0	0	0	0	0	0	0	0	0	0	0	0	0	0	0	0	0	0	0	0
0x034	AES_KEYR5	KEY[191:160]																															
	Reset value	0	0	0	0	0	0	0	0	0	0	0	0	0	0	0	0	0	0	0	0	0	0	0	0	0	0	0	0	0	0	0	0
0x038	AES_KEYR6	KEY[223:192]																															
	Reset value	0	0	0	0	0	0	0	0	0	0	0	0	0	0	0	0	0	0	0	0	0	0	0	0	0	0	0	0	0	0	0	0
0x03C	AES_KEYR7	KEY[255:224]																															
	Reset value	0	0	0	0	0	0	0	0	0	0	0	0	0	0	0	0	0	0	0	0	0	0	0	0	0	0	0	0	0	0	0	0
0x040	AES_SUSP0R	SUSP[31:0]																															
	Reset value	0	0	0	0	0	0	0	0	0	0	0	0	0	0	0	0	0	0	0	0	0	0	0	0	0	0	0	0	0	0	0	0
0x044	AES_SUSP1R	SUSP[31:0]																															
	Reset value	0	0	0	0	0	0	0	0	0	0	0	0	0	0	0	0	0	0	0	0	0	0	0	0	0	0	0	0	0	0	0	0
0x048	AES_SUSP2R	SUSP[31:0]																															
	Reset value	0	0	0	0	0	0	0	0	0	0	0	0	0	0	0	0	0	0	0	0	0	0	0	0	0	0	0	0	0	0	0	0
0x04C	AES_SUSP3R	SUSP[31:0]																															
	Reset value	0	0	0	0	0	0	0	0	0	0	0	0	0	0	0	0	0	0	0	0	0	0	0	0	0	0	0	0	0	0	0	0
0x050	AES_SUSP4R	SUSP[31:0]																															
	Reset value	0	0	0	0	0	0	0	0	0	0	0	0	0	0	0	0	0	0	0	0	0	0	0	0	0	0	0	0	0	0	0	0
0x054	AES_SUSP5R	SUSP[31:0]																															
	Reset value	0	0	0	0	0	0	0	0	0	0	0	0	0	0	0	0	0	0	0	0	0	0	0	0	0	0	0	0	0	0	0	0
0x058	AES_SUSP6R	SUSP[31:0]																															
	Reset value	0	0	0	0	0	0	0	0	0	0	0	0	0	0	0	0	0	0	0	0	0	0	0	0	0	0	0	0	0	0	0	0
0x05C	AES_SUSP7R	SUSP[31:0]																															
	Reset value	0	0	0	0	0	0	0	0	0	0	0	0	0	0	0	0	0	0	0	0	0	0	0	0	0	0	0	0	0	0	0	0
0x060-0x3FF	Reserved	Res.	Res.	Res.	Res.	Res.	Res.	Res.	Res.	Res.	Res.	Res.	Res.	Res.	Res.	Res.	Res.	Res.	Res.	Res.	Res.	Res.	Res.	Res.	Res.	Res.	Res.	Res.	Res.	Res.	Res.	Res.	Res.

Refer to *Section 2.2 on page 55* for the register boundary addresses.

20 Public key accelerator (PKA)

20.1 Introduction

PKA (public key accelerator) is intended for the computation of cryptographic public key primitives, specifically those related to RSA, Diffie-Hellmann or ECC (elliptic curve cryptography) over GF(*p*) (Galois fields). To achieve high performance at a reasonable cost, these operations are executed in the Montgomery domain.

All needed computations are performed within the accelerator, so no further hardware/software elaboration is needed to process the inputs or the outputs.

20.2 PKA main features

- Acceleration of RSA, DH and ECC over GF(*p*) operations, based on the Montgomery method for fast modular multiplications. More specifically:
  - RSA modular exponentiation, RSA Chinese Remainder Theorem (CRT) exponentiation
  - ECC scalar multiplication, point on curve check
  - ECDSA signature generation and verification
- Capability to handle operands up to 3136 bits for RSA/DH and 640 bits for ECC.
- Arithmetic and modular operations such as addition, subtraction, multiplication, modular reduction, modular inversion, comparison, and Montgomery multiplication.
- Built-in Montgomery domain inward and outward transformations.
- AMBA AHB slave peripheral, accessible through 32-bit word single accesses only (otherwise, for writes, an AHB bus error is generated, and write accesses are ignored).

20.3 PKA functional description

20.3.1 PKA block diagram

Figure 95 shows the block diagram of the public key accelerator PKA.

Figure 95. PKA block diagram

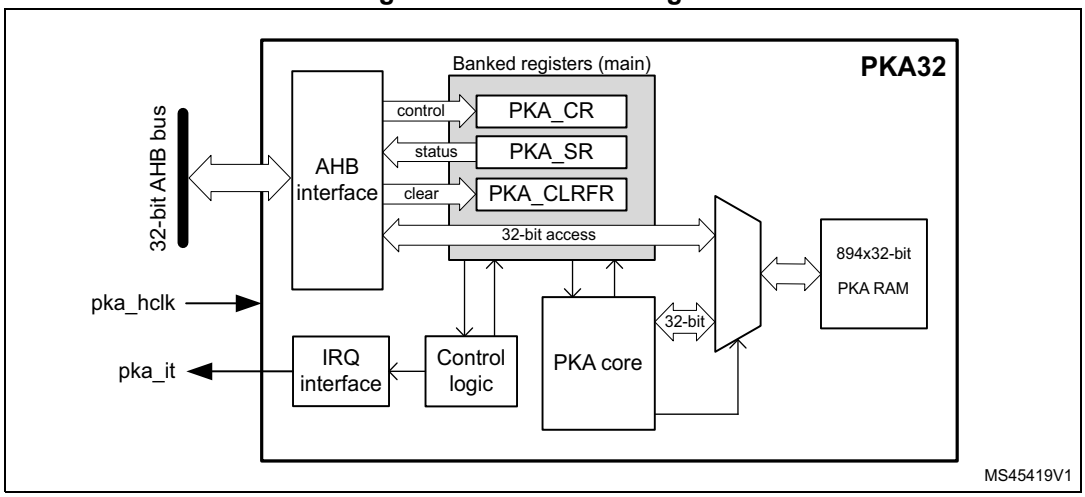

20.3.2 PKA internal signals

Table 100 lists internal signals available at the IP level, not necessarily available on product bonding pads.

Table 100. Internal input/output signals

Signal name	Signal type	Description
pka_hclk	Digital input	AHB bus clock
pka_it	Digital output	Public key accelerator IP global interrupt request

20.3.3 PKA reset and clocks

PKA is clocked on the AHB bus clock. The RAM receives this clock directly, the core is clocked at half the frequency.

20.3.4 PKA public key acceleration

Overview

Public key accelerator (PKA) is used to accelerate Rivest, Shamir and Adleman (RSA), Diffie-Hellman (DH) as well as ECC over prime field operations. Supported operand sizes is up to 3136 bits for RSA and DH, and up to 640 bits for ECC.

The PKA supports all non-singular elliptic curves defined over prime fields, that can be described with a short Weierstrass equation $y^2 = x^3 + ax + b$ (mod p). More information is found in *Section 20.5.1: Supported elliptic curves*.

Note: Binary curves, Edwards curves and Curve25519 are not supported by the PKA.

A memory of 3576 bytes (894 words of 32 bits) called PKA RAM is used for providing initial data to the PKA, and for holding the results after computation is completed. Access is done though the PKA AHB interface.

PKA operating modes

The list of operations the PKA can perform is detailed in *Table 101* and *Table 102*, respectively, for integer arithmetic functions and prime field (Fp) elliptic curve functions.

Each of these operating modes has an associated code that has to be written to the MODE field in the PKA_CR register.

Table 101. PKA integer arithmetic functions list

PKA_CR.MODE[5:0]		Performed operation	Reference
Hex	Binary		
0x01	000001	Montgomery parameter computation R2 mod n	*Section 20.4.2*
0x0E	001110	Modular addition (A+B) mod n	*Section 20.4.3*
0x0F	001111	Modular subtraction (A-B) mod n	*Section 20.4.4*
0x10	010000	Montgomery multiplication (AxB) mod n	*Section 20.4.5*
0x00	000000	Modular exponentiation A^e mod n	*Section 20.4.6*
0x02	000010	Modular exponentiation A^e mod n (fast mode)	
0x08	001000	Modular inversion A-1 mod n	*Section 20.4.7*
0x0D	001101	Modular reduction A mod n	*Section 20.4.8*
0x09	001001	Arithmetic addition A+B	*Section 20.4.9*
0x0A	001010	Arithmetic subtraction A-B	*Section 20.4.10*
0x0B	001011	Arithmetic multiplication AxB	*Section 20.4.11*
0x0C	001100	Arithmetic comparison (A=B, A>B, A<B)	*Section 20.4.12*
0x07	000111	RSA CRT exponentiation	*Section 20.4.13*

Table 102. PKA prime field (Fp) elliptic curve functions list

PKA_CR.MODE[5:0]		Performed operation	Reference
Hex	Binary		
0x28	101000	Point on elliptic curve Fp check	*Section 20.4.14*
0x20	100000	ECC scalar multiplication kP	*Section 20.4.15*
0x22	100010	ECC scalar multiplication kP (fast mode)	
0x24	100100	ECDSA sign	*Section 20.4.16*
0x26	100110	ECDSA verification	*Section 20.4.17*

Montgomery space and fast mode operations

For efficiency reason the PKA internally performs modular multiply operations in the Montgomery domain, automatically performing inward and outward transformations.

As Montgomery parameter computation is time consuming the application can decide to use a faster mode of operation, during which the precomputed Montgomery parameter is

supplied before starting the operation. Performance improvement is detailed in *Section 20.5.2: Computation times*.

The operations using fast mode are modular exponentiation and scalar multiplication.

20.3.5 Typical applications for PKA

Introduction

The PKA can be used to accelerate a number of public key cryptographic functions. In particular:

- RSA encryption and decryption
- RSA key finalization
- CRT-RSA decryption
- DSA and ECDSA signature generation and verification
- DH and ECDH key agreement

Specifications of the above functions are given in following publications:

- FIPS PUB 186-4, Digital Signature Standard (DSS), July 2013 by NIST
- PKCS #1, RSA Cryptography Standard, v1.5, v2.1 and v2.2. by RSA Laboratories
- IEEE1363-2000, IEEE Standard Specifications for Public-Key Cryptography, January 2000
- ANSI X9.62-2005, Public Key Cryptography for the Financial Services Industry, The Elliptic Curve Digital Signature Algorithm (ECDSA), November 2005

The principles of the main functions are described in this section, for a more detailed description refer to the above cited documents.

RSA key pair

For following RSA operations a public key and a private key information are defined as below:

- Alice transmits her public key (n, e) to Bob. Numbers n and e are very large positive integers.
- Alice keeps secret her private key d, also a very large positive integer. Alternatively this private key can also be represented by a quintuple (p, q, dp, dq, qInv).

For more information on above representations refer to the RSA specification.

RSA encryption/decryption principle

As recommended by the PKCS#1 specification, Bob, to encrypt message M using Alice's public key (n, e) must go through the following steps:

1. Compute the encoded message EM = ENCODE(M), where ENCODE is an encoding method.
2. Turn EM into an integer m, with $0 \leq m < n$ and (m, n) being co-primes.
3. Compute ciphertext $c = m^e \bmod n$.
4. Convert the integer c into a string ciphertext C.

Alice, to decrypt ciphertext c using her private key, follows the steps indicated below:

1. Convert the ciphertext C to an integer ciphertext representative c.
2. Recover plaintext $m = c^d \bmod n = (m^e)^d \bmod n$. If the private key is the quintuple (p, q, dp, dq, qInv), then plaintext *m* is obtained by performing the operations:
   a) $m_1 = c^{dp} \bmod p$
   b) $m_2 = c^{dq} \bmod q$
   c) $h = qInv\,(m_1 - m_2) \bmod p$
   d) $m = m_2 + h\,q$
3. Convert the integer message representative *m* to an encoded message EM.
4. Recover message M= DECODE(EM), where DECODE is a decoding method.

Above operations can be accelerated by PKA using *Modular exponentiation* $A^e \bmod n$ if the private key is *d*, or *RSA CRT exponentiation* if the private key is the quintuple (p, q, dp, dq, qInv).

Note: The decoding operation and the conversion operations between message and integers are specified in PKCS#1 standard.

Elliptic curve selection

For following ECC operations curve parameters are defined as below:

- Curve corresponds to the elliptic curve field agreed among actors (Alice and Bob). Supported curves parameters are summarized in *Section 20.5.1: Supported elliptic curves*.
- G is the chosen elliptic curve base point (also known as generator), with a large prime order n (i.e. *n* x G = identity element O).

ECDSA message signature generation

ECDSA (Elliptic Curve Digital Signature Algorithm) signature generation function principle is the following: Alice, to sign a message *m* using her private key integer d_A, follows the steps below.

1. Calculate e = HASH(*m*), where HASH is a cryptographic hash function.
2. Let z be the L_n leftmost bits of e, where L_n is the bit length of the group order *n*.
3. Select a cryptographically secure random integer k where $0 < k < n$.
4. Calculate the curve point $(x_1, y_1) = k \times G$.
5. Calculate $r = x_1 \bmod n$. If $r = 0$ go back to step 3.
6. Calculate $s = k^{-1}\,(z + rd_A) \bmod n$. If $s = 0$ go back to step 3.
7. The signature is the pair (*r*, *s*).

Steps 4 to 7 are accelerated by PKA using:

- *ECDSA sign* or
- All of the operations below:
  - *ECC Fp scalar multiplication* k x P
  - *Modular reduction* A mod *n*
  - *Modular inversion* $A^{-1} \bmod n$
  - *Modular addition* and *Modular and Montgomery multiplication*

ECDSA signature verification

ECDSA (elliptic curve digital signature algorithm) signature verification function principle is the following: Bob, to authenticate Alice's signature, must have a copy of her public key curve point Q_A.

Bob can verify that Q_A is a valid curve point going through the following steps:

1. check that Q_A is not equal to the identity element O
2. check that Q_A is on the agreed curve
3. check that n x Q_A = O.

Then Bob follows the procedure detailed below:

1. verify that *r* and *s* are integer in [1, n-1]
2. calculate *e* = HASH(*m*), where HASH is the agreed cryptographic hash function
3. let z be the L_n leftmost bits of *e*
4. calculate w = s^{-1} mod *n*
5. calculate u_1 = zw mod *n* and u_2 = *rw* mod *n*
6. calculate the curve point $(x_1, y_1) = u_1 \times G + u_2 \times Q_A$
7. the signature is valid if $r = x_1$ (mod *n*), it is invalid otherwise.

Steps 4 to 7 are accelerated by PKA using *ECDSA verification*.

20.3.6 PKA procedure to perform an operation

Enabling/disabling PKA

Setting the EN bit to 1 in PKA_CR register enables the PKA peripheral. When EN = 0, the PKA peripheral is kept under reset, with PKA memory still accessible by the application through the AHB interface.

Clearing EN bit to 0 while a calculation is in progress causes the operation to be aborted. In this case, the content of the PKA memory is not guaranteed.

Data formats

The format of the input data and the results in the PKA RAM are specified, for each operation, in *Section 20.4*.

Executing a PKA operation

Each of the supported PKA operation is executed using the following procedure:

1. Load initial data into the PKA internal RAM, which is located at address offset 0x400.
2. Write in the MODE field of PKA_CR register, specifying the operation which is to be executed and then assert the START bit, also in PKA_CR register.
3. Wait until the PROCENDF bit in the PKA_SR register is set to “1”, indicating that the computation is complete.
4. Read the result data from the PKA internal RAM, then clear PROCENDF bit by setting PROCENDFC bit in PKA_CLRFR.

Note: When PKA is busy (BUSY = 1) any access by the application to PKA RAM is ignored, and the flag RAMERRF is set in PKA_SR.

Using precomputed Montgomery parameters (PKA fast mode)

As explained in *Section 20.3.4*, when computing many operations with the same modulus it can be beneficial for the application to compute only once the corresponding Montgomery parameter (see, for example, *Section 20.4.5*). This is know as “fast mode”.

To manage Fast Mode usage the recommended procedure is described below:

1. Load in PKA RAM the modulus size and value information. Such information is compiled in *Section 20.5.1*.
2. Program in PKA_CR register the PKA in *Montgomery parameter computation* mode (MODE=”0x1”) then assert the START bit.
3. Wait until the PROCENDF bit in the PKA_SR register is set to “1”, then read back from PKA memory the corresponding Montgomery parameter, and then clear PROCENDF bit by setting PROCENDFC bit in PKA_CLRFR.
4. Proceed with the required PKA operation, loading on top of regular input data the Montgomery information R2 mod m. All addresses are indicated in *Section 20.4*.

20.3.7 PKA error management

When PKA is used some errors can occur:

- The access to PKA RAM falls outside the expected range. In this case the Address Error flag (ADDRERRF) is set in the PKA_SR register.
- An AHB access to the PKA RAM occurred while the PKA core was using it. In this case the RAM Error Flag (RAMERRF) is set in the PKA_SR register, reads to PKA RAM return zero, while writes are ignored.

For each error flag above PKA generates an interrupt if the application sets the corresponding bit in PKA_CR register (see *Section 20.6* for details).

ADDRERRF and RAMERRF errors are cleared by setting the corresponding bit in PKA_CLRFR.

The PKA can be re-initialized at any moment by resetting the EN bit in the PKA_CR register.

20.4 PKA operating modes

20.4.1 Introduction

The various operations supported by PKA are described in the following subsections, clarifying the associated format of the input data and of the results, both stored in the PKA RAM.

The following information applies to all PKA operations.

- PKA core processes 32-bit words
- Supported operand “Size” are:
  - ROS (RSA operand size): data size is (*rsa_size*/32+1) words, with *rsa_size* equal to the chosen modulus length. For example, when computing RSA with an operand size of 1024 bits, ROS is equal to 33 words, or 1056 bits.
  - EOS (ECC operand size): data size is (*ecc_size*/32+1) words, with *ecc_size* equal to the chosen prime modulus length. For example, when computing ECC with an operand size of 192 bits, EOS is equal to 7 words, or 224 bits.

Note: Fractional results for above formulas are rounded up to the nearest integer since PKA core processes 32-bit words.

Note: The maximum ROS is 99 words (3136-bit max exponent size), while the maximum EOS is 21 words (640-bit max operand size).

- The column indicated with Storage in the following tables indicates either the Register PKA_CR, or the address offset within the PKA, located in the PKA RAM area (starting from 0x400). To recover the physical address of an operand the application must add to the indicated offset the base address of the PKA.
- About writing parameters ("IN" direction)
  - When elements are written as input in the PKA memory, an additional word with all bits equal to zero must be added. As an example, when ECC P256 is used and when loading an input (represented on 256 bits or 8 words), an additional word is expected by the PKA and it has to be filled with zeros.
  - About endianess, for example to prepare the operation ECC Fp scalar multiplication, when application writes x_p coordinate for an ECC P256 curve (EOS= 9 words) the least significant bit is to be placed in bit 0 at address offset 0x55C; the most significant bit is to be placed in bit 31 of address offset 0x578. Then, as mentioned above, word 0x00000000 should also be written at address offset 0x57C.
  - Unless indicated otherwise all operands in the tables are integers.
- About PKA outputs ("OUT" direction)
  - Unless specified in the tables PKA does not provide an error output when a wrong parameter is written by the application.

Caution: Validity of all input parameters to the PKA must be checked before issuing any PKA operation. Indeed, the PKA assumes that all input parameters are valid and consistent with each other.

20.4.2 Montgomery parameter computation

This function is used to compute the Montgomery parameter (R^2 mod *n*) used by PKA to convert operands into the Montgomery residue system representation.

Note: This operation can also be used with ECC curves. In this case prime modulus length and EOS size must be used.

Operation instructions for Montgomery parameter computation are summarized in *Table 103*.

Table 103. Montgomery parameter computation

Parameters with direction		Value (Note)	Storage	Size
IN	MODE	0x01	PKA_CR	6 bits
	Modulus length	(In bits, 0 ≤ value < 3136bits)	RAM@0x404	32 bits
	Modulus value n	(Odd integer only, n < 2^{3136})	RAM@0xD5C	ROS
OUT	Result: R^2 n	-	RAM@0x594	

20.4.3 Modular addition

Modular addition operation consists in the computation of A + B mod *n*. Operation instructions are summarized in *Table 104*.

Table 104. Modular addition

Parameters with direction		Value (Note)	Storage	Size
IN	MODE	0x0E	PKA_CR	6 bits
	Operand length	(In bits, not null)	RAM@0x404	32 bits
	Operand A	(0 ≤ A < n)	RAM@0x8B4	ROS
	Operand B	(0 ≤ B < n)	RAM@0xA44	
	Modulus value n	(n < 2^{3136})	RAM@0xD5C	
OUT	Result: A+B mod n	(0 ≤ result < n)	RAM@0xBD0	

20.4.4 Modular subtraction

Modular subtraction operation consists in the following computations:

- If A ≥ B result equals A - B mod *n*
- If A < B result equals A + n - B mod *n*

Operation instructions are summarized in *Table 105*.

Table 105. Modular subtraction

Parameters with direction		Value (Note)	Storage	Size
IN	MODE	0x0F	PKA_CR	6 bits
	Operand length	(In bits, not null)	RAM@0x404	32 bits
	Operand A	(0 ≤ A < n)	RAM@0x8B4	ROS
	Operand B	(0 ≤ B < n)	RAM@0xA44	
	Modulus value n	(n < 2^{3136})	RAM@0xD5C	
OUT	Result: A-B mod n	(0 ≤ result < n)	RAM@0xBD0	

20.4.5 Modular and Montgomery multiplication

To be more efficient when performing a sequence of multiplications the PKA accelerates multiplication which has at least one input in the Montgomery domain. The two main uses of this operation are:

- Map a value from natural domain to Montgomery domain and vice-versa
- Perform a modular multiplication A x B mod *n*

The method to perform above operations are described below. Note that “x” function is this operation, and A, B, C operands are in the natural domain.

1. Inward (or outward) conversion into (or from) Montgomery domain
   a) Let's assume A is an integer in the natural domain
      Compute *r2modn* using *Montgomery parameter computation*
      Result AR= A x *r2modn* mod *n* is A in the Montgomery domain
   b) Let's assume BR is an integer in the Montgomery domain
      Result B = BR x 1 mod *n* is B in the natural domain
      Similarly, above value AR computed in a) can be converted into the natural domain by computing A = AR x 1 mod *n*
2. Simple modular multiplication A x B mod *n*
   a) Compute *r2modn* using *Montgomery parameter computation*
   b) Compute AR = A x *r2modn* mod *n*. Output is in the Montgomery domain
   c) Compute AB= AR x B mod *n*. Output is in natural domain
3. Multiple modular multiplication A x B x C mod *n*
   a) Compute *r2modn* using *Montgomery parameter computation*
   b) Compute AR = A x *r2modn* mod *n*. Output is in the Montgomery domain
   c) Compute BR = B x *r2modn* mod *n*. Output is in the Montgomery domain
   d) Compute ABR= AR x BR mod *n*. Output is in the Montgomery domain
   e) Compute CR = C x *r2modn* mod *n*. Output is in the Montgomery domain
   f) Compute ABCR= ABR x CR mod *n*. Output is in the Montgomery domain
   g) (optional) Repeat the two steps above if more operands need to be multiplied
   h) Compute ABC= ABCR x 1 mod *n* to retrieve the result in natural domain

Operation instructions for Montgomery multiplication are summarized in *Table 106*.

Table 106. Montgomery multiplication

Parameters with direction		Value (Note)	Storage	Size
IN	MODE	0x10	PKA_CR	6 bits
	Operand length	(In bits, not null)	RAM@0x404	32 bits
	Operand A	(0 ≤ A < n)	RAM@0x8B4	ROS
	Operand B	(0 ≤ B < n)	RAM@0xA44	
	Modulus value n	(Odd integer only, n < 2^{3136})	RAM@0xD5C	
OUT	Result: AxB mod n(1)	-	RAM@0xBD0	

1. Result in Montgomery domain or in natural domain, depending upon the inputs nature (see examples *2* and *3*).

20.4.6 Modular exponentiation

Modular exponentiation operation is commonly used to perform a single-step RSA operation. It consists in the computation of A^e mod *n*.

Operation instructions for modular exponentiation are summarized in *Table 107* (normal mode) and in *Table 108* (fast mode). Fast mode usage is explained in *Section 20.3.6*.

Table 107. Modular exponentiation (normal mode)

Parameters with direction		Value (Note)	Storage	Size
IN	MODE	0x00	PKA_CR	6 bits
IN	Exponent length	(in bits, not null)	RAM@0x400	32 bits
	Operand length	(in bits, not null)	RAM@0x404	
IN/OUT	Operand A (base of exponentiation)	(0 ≤ A < n)	RAM@0xA44	ROS
IN	Exponent e	(0 ≤ e < n)	RAM@0xBD0	
	Modulus value n	(Odd integer only, $n < 2^{3136}$)	RAM@0xD5C	
OUT	Result: A^e mod n	(0 ≤ result < n)	RAM@0x724	

Table 108. Modular exponentiation (fast mode)

Parameters with direction		Value (Note)	Storage	Size
IN	MODE	0x02	PKA_CR	6 bits
IN	Exponent length	(in bits, not null)	RAM@0x400	32 bits
	Operand length	(in bits, not null)	RAM@0x404	
IN/OUT	Operand A (base of exponentiation)	(0 ≤ A < n)	RAM@0xA44	ROS
IN	Exponent e	(0 ≤ e < n)	RAM@0xBD0	
	Modulus value n	(Odd integer only, $n < 2^{3136}$)	RAM@0xD5C	
IN/OUT	Montgomery param R2 mod n	(mandatory)	RAM@0x594	
OUT	Result: A^e mod n	(0 ≤ result < n)	RAM@0x724	

20.4.7 Modular inversion

Modular inversion operation consists in the computation of multiplicative inverse A^{-1} mod *n*. If the modulus *n* is prime, for all values of A (1 ≤ A < *n*) modular inversion output is valid. If the modulus *n* is not prime, A has an inverse only if the largest common divisor between A and *n* is 1.

If the operand A is a divisor of the modulus *n,* the result is a multiple of a factor of *n*.

Operation instructions for modular inversion are summarized in *Table 109*.

Table 109. Modular inversion

Parameters with direction		Value (Note)	Storage	Size
IN	MODE	0x08	PKA_CR	6 bits
	Operand length	(In bits, not null)	RAM@0x404	32 bits
	Operand A	(0 ≤ A < n)	RAM@0x8B4	ROS
	Modulus value n	(Odd integer only, $n < 2^{3136}$)	RAM@0xA44	
OUT	Result: A^{-1} mod n	0 < result < n	RAM@0xBD0	

20.4.8 Modular reduction

Modular reduction operation consists in the computation of the remainder of A divided by n. Operation instructions are summarized in *Table 110*.

Table 110. Modular reduction

Parameters with direction		Value (Note)	Storage	Size
IN	MODE	0x0D	PKA_CR	6 bits
	Operand length	(In bits, not null)	RAM@0x400	32 bits
	Modulus length	(In bits, 8 < value < 3136)	RAM@0x404	
	Operand A	($0 \le A < 2n < 2^{3136}$)	RAM@0x8B4	ROS
	Modulus value n	(Odd integer only, $n < 2^{3136}$)	RAM@0xA44	
OUT	Result A mod n	(0 < result < n)	RAM@0xBD0	

20.4.9 Arithmetic addition

Arithmetic addition operation consists in the computation of A + B. Operation instructions are summarized in *Table 111*.

Table 111. Arithmetic addition

Parameters with direction		Value (Note)	Storage	Size
IN	MODE	0x09	PKA_CR	6 bits
	Operand length M	(In bits, not null)	RAM@0x404	32 bits
	Operand A	($0 \le < A < 2^M$)	RAM@0x8B4	ROS
	Operand B	($0 \le < B < 2^M$)	RAM@0xA44	
OUT	Result: A+B	($0 \le$ result $< 2^{M+1}$)	RAM@0xBD0	ROS + 1

20.4.10 Arithmetic subtraction

Arithmetic subtraction operation consists in the following computations:

- If A ≥ B result equals A - B
- If A < B and M/32 residue is >0 result equals $A + 2^{int(M/32)*32+1} - B$
- If A < B and M/32 residue is 0 result equals $A + 2^{int(M/32)*32} - B$

Operation instructions are summarized in *Table 112*.

Table 112. Arithmetic subtraction

Parameters with direction		Value (Note)	Storage	Size
IN	MODE	0x0A	PKA_CR	6 bits
	Operand length M	(In bits, not null)	RAM@0x404	32 bits
	Operand A	($0 \le < A < 2^M$)	RAM@0x8B4	ROS
	Operand B	($0 \le < B < 2^M$)	RAM@0xA44	
OUT	Result: A-B	($0 \le$ result $< 2^M$)	RAM@0xBD0	

20.4.11 Arithmetic multiplication

Arithmetic multiplication operation consists in the computation of AxB. Operation instructions are summarized in *Table 113*.

Table 113. Arithmetic multiplication

Parameters with direction		Value (Note)	Storage	Size
IN	MODE	0x0B	PKA_CR	6 bits
	Operand length M	(In bits, not null)	RAM@0x404	32 bits
	Operand A	$(0 \leq < A < 2^M)$	RAM@0x8B4	ROS
	Operand B	$(0 \leq < B < 2^M)$	RAM@0xA44	
OUT	Result: AxB	$(0 \leq \text{result} < 2^M)$	RAM@0xBD0	2xROS

20.4.12 Arithmetic comparison

Arithmetic comparison operation consists in the following computation:

- If A=B then result=0x0
- If A>B then result=0x1
- If A<B then result=0x2

Operation instructions for arithmetic comparison are summarized in *Table 114*.

Table 114. Arithmetic comparison

Parameters with direction		Value (Note)	Storage	Size
IN	MODE	0x0C	PKA_CR	6 bits
	Operand length M	(In bits, not null)	RAM@0x404	32 bits
	Operand A	$(0 \leq < A < 2^M)$	RAM@0x8B4	ROS
	Operand B	$(0 \leq < B < 2^M)$	RAM@0xA44	
OUT	Result A=B or A>B or A<B	0x0, 0x1 or 0x02	RAM@0xBD0	32 bits

20.4.13 RSA CRT exponentiation

For efficiency many popular crypto libraries like OpenSSL RSA use the following optimization for decryption and signing based on the Chinese remainder theorem (CRT):

- *p* and *q* are precomputed primes, stored as part of the private key
- $d_P = d \bmod (p - 1)$
- $d_Q = d \bmod (q - 1)$ and
- $q_{inv} = q^{-1} \bmod p$

These values allow the recipient to compute the exponentiation $m = A^d$ (mod pq) more efficiently as follows:

- $m_1 = A^{dP}$ mod p
- $m_2 = A^{dQ}$ mod p
- $h = q_{inv} (m_1 - m_2)$ mod p, with $m_1 > m_2$
- $m = m_2 + hq$

Operation instructions for computing CRT exponentiation A^d mod pq are summarized in *Table 115*.

Table 115. CRT exponentiation

Parameters with direction		Value (Note)	Storage	Size
IN	MODE	0x07	PKA_CR	6 bits
IN	Operand length	(in bits, not null)	RAM@0x404	32 bits
IN	Operand d_P	$(0 \le d_P < 2^{M/2})$	RAM@0x65C	ROS/2
	Operand d_Q	$(0 \le d_Q < 2^{M/2})$	RAM@0xBD0	
	Operand q_{inv}	$(0 \le q_{inv} < 2^{M/2})$	RAM@0x7EC	
	Prime p(1)	$(0 \le p < 2^{M/2})$	RAM@0x97C	
	Prime q(1)	$(0 \le q < 2^{M/2})$	RAM@0xD5C	
IN	Operand A	$(0 \le A < 2^{M/2})$	RAM@0xEEC	ROS
OUT	Result: A^d mod pq	(0 ≤ result < pq)	RAM@0x724	

1. Must be different from 2.

20.4.14 Point on elliptic curve Fp check

This operation consists in checking whether a given point P (x, y) satisfies or not the curves over prime fields equation $y^2 = (x^3 + ax + b)$ mod p, where a and b are elements of the curve.

Operation instructions for point on elliptic curve Fp check are summarized in *Table 116*.

Table 116. Point on elliptic curve Fp check

Parameters with direction		Value (Note)	Storage	Size
IN	MODE	0x28	PKA_CR	6 bits
	Modulus length	(In bits, not null, 8 < value < 640)	RAM@0x404	32 bits
	Curve coefficient *a* sign	0x0: positive 0x1: negative	RAM@0x408	
	Curve coefficient |a|	(Absolute value, |a| < p)	RAM@0x40C	EOS
	Curve coefficient *b*	(|b| < p)	RAM@0x7FC	
	Curve modulus value *p*	(Odd integer prime, 0 < p < 2640)	RAM@0x460	
	Point P coordinate *x*	(x < *p*)	RAM@0x55C	
	Point P coordinate *y*	(y < *p*)	RAM@0x5B0	
OUT	Result: P on curve	0x0: point on curve Not 0x0: point not on curve	RAM@0x400	32 bits

20.4.15 ECC Fp scalar multiplication

This operation consists in the computation of a k x P (x_P, y_P), where P is a point on a curve over prime fields and “x” is the elliptic curve scalar point multiplication. Result of the computation is a point that belongs to the same curve or a point at infinity.

Operation instructions for ECC Fp scalar multiplication are summarized in *Table 117* (normal mode) and *Table 118* (fast mode). Fast mode usage is explained in *Section 20.3.6*.

Table 117. ECC Fp scalar multiplication

Parameters with direction		Value (Note)	Storage	Size
IN	MODE	0x20	PKA_CR	6 bits
IN	Scalar multiplier k length	(In bits, not null, 8 < value < 640)	RAM@0x400	32 bits
	Modulus length	(In bits, not null, 8 < value < 640)	RAM@0x404	
	Curve coefficient *a* sign	0x0: positive 0x1: negative	RAM@0x408	
IN	Curve coefficient |a|	(Absolute value, |a| < p)	RAM@0x40C	EOS
	Curve modulus value *p*	(Odd integer prime, 0 < p < 2^{640})	RAM@0x460	
	Scalar multiplier k	(0 ≤ k < 2^{640})	RAM@0x508	
	Point P coordinate x_P	(x < *p*)	RAM@0x55C	
	Point P coordinate y_P	(y < *p*)	RAM@0x5B0	
OUT	Result: k x P coordinate *x*	(result < *p*)	RAM@0x55C	
	Result: k x P coordinate *y*	(result < *p*)	RAM@0x5B0	

Table 118. ECC Fp scalar multiplication (Fast Mode)

Parameters with direction		Value (Note)	Storage	Size
IN	MODE	0x22	PKA_CR	6 bits
IN	Scalar multiplier k length	(In bits, not null, 8 < value < 640)	RAM@0x400	32 bits
	Modulus length	(In bits, not null, 8 < value < 640)	RAM@0x404	
	Curve coefficient *a* sign	0x0: positive 0x1: negative	RAM@0x408	
IN	Curve coefficient |a|	(Absolute value, |a| < p)	RAM@0x40C	EOS
	Curve modulus value *p*	(Odd integer prime, $0 < p < 2^{640}$)	RAM@0x460	
	Scalar multiplier k	($0 \le k < 2^{640}$)	RAM@0x508	
	Point P coordinate x_P	(x < *p*)	RAM@0x55C	
	Point P coordinate y_P	(y < *p*)	RAM@0x5B0	
IN	Montgomery parameter R^2 mod *p*	(mandatory)	RAM@0x4B4	
OUT	Result: k x P coordinate *x*	(result < *p*)	RAM@0x55C	
	Result: k x P coordinate *y*	(result < *p*)	RAM@0x5B0	

When performing this operation following special cases should be noted:

- For k = 0, this function returns a point at infinity, that is (0, 0) if curve parameter b is nonzero and (0, 1) otherwise. For k different from 0 it might happen that a point at infinity is returned. When the application detects this behavior a new computation should be carried out.
- For k < 0 (i.e. a negative scalar multiplication is required) multiplier absolute value k = |-k| should be provided to the PKA. After the computation completion, the formula -P = (x, -y) can be used to compute the y coordinate of the effective final result (the x coordinate remains the same).

20.4.16 ECDSA sign

ECDSA signing operation (outlined in *Section 20.3.5*) is summarized in *Table 119* (input parameters) and in *Table 120* (output parameters).

The application should check if the output error is equal to zero, if it is different from zero a new k should be generated and the ECDSA sign operation should be repeated.

Table 119. ECDSA sign - Inputs

Parameters with direction		Value (Note)	Storage	Size
IN	MODE	0x24	PKA_CR	6 bits
	Curve prime order n length	(in bits, not null)	RAM@0x400	32 bits
	Curve modulus p length	(in bits, 8 < value < 640)	RAM@0x404	
	Curve coefficient a sign	0x0: positive 0x1: negative	RAM@0x408	
	Curve coefficient |a|	(Absolute value, |a| < p)	RAM@0x40C	EOS
	Curve modulus value *p*	(Odd integer prime, $0 < p < 2^{640}$)	RAM@0x460	
	Integer k(1)	($0 \le k < 2^{640}$)	RAM@0x508	
	Curve base point G coordinate x	(x < *p*)	RAM@0x55C	
	Curve base point G coordinate y	(y < *p*)	RAM@0x5B0	
	Hash of message z	(z < 2M)	RAM@0xDE8	
	Private key d	(positive integer)	RAM@0xE3C	
	Curve prime order n	(integer prime)	RAM@0xE94	

1. This integer is usually a cryptographically secure random number, but in some cases k could be deterministically generated.

Table 120. ECDSA sign - Outputs

Parameters with direction		Value (Note)	Storage	Size
OUT	Signature part *r*	(0 < *r* < n)	RAM@0x700	EOS
	Signature part *s*	(0 < *s* < n)	RAM@0x754	
ERROR	Result of signature	– 0x0: no error – 0x1: signature part r is equal to 0 – 0x2: signature part s is equal to 0	RAM@0xEE8	32 bits

Note: If error output is different from zero the content of the PKA memory should be cleared to avoid leaking information about the private key.

Extended ECDSA support

PKA also supports Extended ECDSA signature, for which the inputs and the outputs have the same ECDSA signature (*Table 119* and *Table 120*, respectively), with the addition of the coordinates of the point kG. This extra output is defined in *Table 121*.

Table 121. Extended ECDSA sign (extra outputs)

Parameters with direction		Value (Note)	Storage	Size
OUT	Curve point kG coordinate x_1	$(0 \le x_1 < p)$	RAM@0x103C	EOS
	Curve point kG coordinate y_1	$(0 \le y_1 < p)$	RAM@0x1090	

20.4.17 ECDSA verification

ECDSA verification operation (outlined in *Section 20.3.5*) is summarized in *Table 122* (input parameters) and *Table 123* (output parameters).

The epplication should check if the output error is equal to zero, if it is different from zero, the signature is not verified.

Table 122. ECDSA verification (inputs)

Parameters with direction		Value (Note)	Storage	Size
IN	MODE	0x26	PKA_CR	6 bits
	Curve prime order n length	(In bits, not null)	RAM@0x404	32 bits
	Curve modulus p length	(In bits, not null, 8 < value < 640)	RAM@0x4B4	
	Curve coefficient a sign	0x0: positive 0x1: negative	RAM@0x45C	
	Curve coefficient |a|	(Absolute value, |a| < p)	RAM@0x460	EOS
	Curve modulus value *p*	(Odd integer prime, $0 < p < 2^{640}$)	RAM@0x4B8	
	Curve base point G coordinate x	$(x < p)$	RAM@0x5E8	
	Curve base point G coordinate y	$(y < p)$	RAM@0x63C	
	Public-key curve point Q coordinate x_Q	$(x_Q < p)$	RAM@0xF40	
	Public-key curve point Q coordinate y_Q	$(y_Q < p)$	RAM@0xF94	
	Signature part *r*	$(0 < r < n)$	RAM@0x1098	
	Signature part *s*	$(0 < s < n)$	RAM@0xA44	
	Hash of message *z*	$(z < 2^M)$	RAM@0xFE8	
	Curve prime order *n*	(integer prime)	RAM@0xD5C	

Table 123. ECDSA verification (outputs)

Parameters with direction		Value (Note)	Storage	Size
OUT	Result: ECDSA verify	0x0: valid signature Not 0x0: invalid signature	RAM@0x5B0	32 bits

20.5 Example of configurations and processing times

20.5.1 Supported elliptic curves

The PKA supports all non-singular elliptic curves defined over prime fields. Those curvescan be described with a short Weierstrass equation $y^2 = x^3 + ax + b \pmod{p}$.

Note: Binary curves, Edwards curves and Curve25519 are not supported by the PKA. The maximum supported operand size for ECC operations is 640 bits.

When publishing the ECC domain parameters of those elliptic curves, standard bodies define the following parameters:

- the prime integer *p*, used as the modulus for all point arithmetic in the finite field GF(*p*)
- the (usually prime) integer *n*, the order of the group generated by G, defined below
- the base point of the curve G, defined by its coordinates (*Gx*, *Gy*)
- the integers *a* and *b*, coefficients of the short Weierstrass equation.

For the last bullet, when standard bodies define *a* as negative, PKA supports two representations:

1. **a defined as *p*-|*a*|** in the finite field GF(*p*), for example **p-3**:
   Curve coefficient p = 0xFFFFFFFE FFFFFFFF FFFFFFFF FFFFFFFF FFFFFFFF 00000000 FFFFFFFF FFFFFFF**F**
   Curve coefficient a sign= 0x0 (positive)
   Curve coefficient a = 0xFFFFFFFE FFFFFFFF FFFFFFFF FFFFFFFF FFFFFFFF 00000000 FFFFFFFF FFFFFFF**C**
2. ***a* defined as negative**, for example **-3**:
   Curve coefficient p = 0xFFFFFFFE FFFFFFFF FFFFFFFF FFFFFFFF FFFFFFFF 00000000 FFFFFFFF FFFFFFFF
   Curve coefficient a sign= 0x**1** (negative)
   Curve coefficient a = 0x00000000 00000000 00000000 00000000 00000000 00000000 00000000 0000000**3**

Table 124 summarizes the family of curves supported by PKA for ECC operations.

Table 124. Family of supported curves for ECC operations

Curve name	Standard	Reference
P-192	NIST	*Digital Signature Standard (DSS)*, NIST FIPS 186-4
P-224		
P-256		
P-384		
P-521		

Table 124. Family of supported curves for ECC operations (continued)

Curve name	Standard	Reference	
brainpoolP224r1, brainpoolP224t1	IETF	– *Brainpool Elliptic Curves*, IETF RFC 5639 – *Brainpool Elliptic Curves for the Internet Key Exchange (IKE) Group Description Registry*, IETF RFC 6932	https://tools.ietf.org
brainpoolP256r1, brainpoolP256t1			
brainpoolP320r1, brainpoolP320t1			
brainpoolP384r1, brainpoolP384t1			
brainpoolP512r1, brainpoolP512t1			
secp192k1, secp192r1	SEC	*Standards for Efficient Cryptography SEC 2 curves*	https://www.secg.org
secp224k1, secp224r1			
secp256k1, secp256r1			
secp384r1			
secp521r1			
Recommended curve parameters for public key cryptographic algorithm SM2	OSCCA	– *Public key cryptographic algorithm SM2 based on elliptic curves*, Organization of State Commercial Administration of China OSCCA SM2, December 2010 – *Digital signatures - Part 3 Discrete logarithm based mechanisms*, ISO/IEC 14888-3, November 2018	

20.5.2 Computation times

The following tables summarize the PKA computation times, expressed in clock cycles.

Table 125. Modular exponentiation computation times

Exponent length (in bits)	Mode	Modulus length (in bits)		
		1024	2048	3072
3	Normal	304000	814000	1728000
	Fast	46000	164000	356000
17	Normal	326000	896000	1910000
	Fast	68000	246000	534000
$2^{16} + 1$	Normal	416000	1222000	2616000
	Fast	158000	572000	1244000
1024	Normal	11664000	-	-
	Fast	11280000	-	-
	CRT(1)	3546000	-	-
2048	Normal	-	83834000	-
	Fast	-	82046000	-
	CRT(1)	-	23468000	-
3072	Normal	-	-	274954000
	Fast	-	-	273522000
	CRT(1)	-	-	73378000

1. CRT stands for chinese remainder theorem optimization (MODE bitfield = 0x07).

Table 126. ECC scalar multiplication computation times(1)

Mode	Modulus length (in bits)						
	160	192	256	320	384	512	521
Normal	1634000	2500000	4924000	8508000	13642000	28890000	33160000
Fast	1630000	2494000	4916000	8494000	13614000	28842000	33158000

1. These times depend on the number of “1”s included in the scalar parameter.

Table 127. ECDSA signature average computation times(1) (2)

Modulus length (in bits)						
160	192	256	320	384	512	521
1760000	2664000	5249000	9016000	14596000	30618000	35540000

1. These values are average execution times of random moduli of given length, as they depend upon the length and the value of the modulus.
2. The execution time for the moduli that define the finite field of NIST elliptic curves is shorter than that needed for the moduli used for Brainpool elliptic curves or for random moduli of the same size.

Table 128. ECDSA verification average computation times

Modulus length (in bits)						
160	**192**	**256**	**320**	**384**	**512**	**521**
3500000	5350000	10498000	18126000	29118000	61346000	71588000

Table 129. Point on elliptic curve Fp check average computation times

Modulus length (in bits)					
160	**192**	**256**	**320**	**384**	**512**
10800	14200	20400	31000	49600	82400

Table 130. Montgomery parameters average computation times(1)

Modulus length (in bits)									
160	**192**	**256**	**320**	**384**	**512**	**521**	**1024**	**2048**	**3072**
4518	7846	11848	14902	21682	35012	64000	119536	466146	1104642

1. The computation times depend upon the length and the value of the modulus, hence these values are average execution times of random moduli of given length.

20.6 PKA interrupts

There are three individual maskable interrupt sources generated by the public key accelerator, signaling the following events:

1. access to unmapped address (ADDRERRF), see *Section 20.3.7*
2. PKA RAM access while PKA operation is in progress (RAMERRF), see *Section 20.3.7*
3. PKA end of operation (PROCENDF)

The three interrupt sources are connected to the same global interrupt request signal pka_it.

The user can enable or disable above interrupt sources individually by changing the mask bits in the *PKA control register (PKA_CR)*. Setting the appropriate mask bit to 1 enables the interrupt. The status of the individual interrupt events can be read from the PKA status register (PKA_SR), and it is cleared in PKA_CLRFR register.

Table 131 gives a summary of the available features.

Table 131. PKA interrupt requests

Interrupt acronym	Interrupt event	Event flag	Enable control bit	Interrupt clear method
PKA	Access to unmapped address error	ADDRERRF	ADDRERRIE	Set ADDRERRFC bit
	PKA RAM access error	RAMERRF	RAMERRIE	Set RAMERRFC bit
	PKA end of operation	PROCENDF	PROCENDIE	Set PROCENDFC bit

20.7 PKA registers

20.7.1 PKA control register (PKA_CR)

Address offset: 0x00

Reset value: 0x0000 0000

31	30	29	28	27	26	25	24	23	22	21	20	19	18	17	16
Res.	Res.	Res.	Res.	Res.	Res.	Res.	Res.	Res.	Res.	Res.	ADDR ERRIE	RAM ERRIE	Res.	PROC ENDIE	Res.
											rw	rw		rw	

15	14	13	12	11	10	9	8	7	6	5	4	3	2	1	0
Res.	Res.	MODE[5:0]						Res.	Res.	Res.	Res.	Res.	Res.	START	EN
		rw	rw	rw	rw	rw	rw							rw	rw

Bits 31:21 Reserved, must be kept at reset value.

Bit 20 **ADDRERRIE**: Address error interrupt enable
0: No interrupt is generated when ADDRERRF flag is set in PKA_SR.
1: An interrupt is generated when ADDRERRF flag is set in PKA_SR.

Bit 19 **RAMERRIE**: RAM error interrupt enable
0: No interrupt is generated when RAMERRF flag is set in PKA_SR.
1: An interrupt is generated when RAMERRF flag is set in PKA_SR.

Bit 18 Reserved, must be kept at reset value.

Bit 17 **PROCENDIE**: End of operation interrupt enable
0: No interrupt is generated when PROCENDF flag is set in PKA_SR.
1: An interrupt is generated when PROCENDF flag is set in PKA_SR.

Bits 16:14 Reserved, must be kept at reset value.

Bits 13:8 **MODE[5:0]**: PKA operation code
000000: Montgomery parameter computation then modular exponentiation
000001: Montgomery parameter computation only
000010: Modular exponentiation only (Montgomery parameter must be loaded first)
100000: Montgomery parameter computation then ECC scalar multiplication
100010: ECC scalar multiplication only (Montgomery parameter must be loaded first)
100100: ECDSA sign
100110: ECDSA verification
101000: Point on elliptic curve Fp check
000111: RSA CRT exponentiation
001000: Modular inversion
001001: Arithmetic addition
001010: Arithmetic subtraction
001011: Arithmetic multiplication
001100: Arithmetic comparison
001101: Modular reduction
001110: Modular addition
001111: Modular subtraction
010000: Montgomery multiplication
Others: Reserved

Bits 7:2 Reserved, must be kept at reset value.

Bit 1 **START**: start the operation

Writing 1 to this bit starts the operation which is selected by MODE[5:0], using the operands and data already written to the PKA RAM. This bit is always read as 0.

Note: START is ignored if PKA is busy.

Bit 0 **EN**: PKA enable.

0: Disable PKA

1: Enable PKA

Note: When EN=0 PKA RAM can still be accessed by the application.

20.7.2 PKA status register (PKA_SR)

Address offset: 0x04

Reset value: 0x0000 0000

31	30	29	28	27	26	25	24	23	22	21	20	19	18	17	16
Res.	Res.	Res.	Res.	Res.	Res.	Res.	Res.	Res.	Res.	Res.	ADDR ERRF	RAM ERRF	Res.	PROC ENDF	BUSY
											r	r		r	r

15	14	13	12	11	10	9	8	7	6	5	4	3	2	1	0
Res.	Res.	Res.	Res.	Res.	Res.	Res.	Res.	Res.	Res.	Res.	Res.	Res.	Res.	Res.	Res.

Bits 31:21 Reserved, must be kept at reset value.

Bit 20 **ADDRERRF**: Address error flag

0: No Address error

1: Address access is out of range (unmapped address)

This bit is cleared using ADDRERRFC bit in PKA_CLRFR.

Bit 19 **RAMERRF**: PKA RAM error flag

0: No PKA RAM access error

1: An AHB access to the PKA RAM occurred while the PKA core was computing and using its internal RAM (AHB PKA_RAM access are not allowed while PKA operation is in progress).

This bit is cleared using RAMERRFC bit in PKA_CLRFR.

Bit 18 Reserved, must be kept at reset value.

Bit 17 **PROCENDF**: PKA End of Operation flag

0: Operation in progress

1: PKA operation is completed. This flag is set when the BUSY bit is deasserted.

Bit 16 **BUSY**: PKA operation is in progress

This bit is set to 1 whenever START bit in the PKA_CR is set. It is automatically cleared when the computation is complete, meaning that PKA RAM can be safely accessed and a new operation can be started.

0: No operation is in progress (default)

1: An operation is in progress

If PKA is started with a wrong opcode the peripheral is busy for a couple of cycles, then it aborts automatically the operation and go back to ready (BUSY bit is set to 0).

Bits 15:0 Reserved, must be kept at reset value.

20.7.3 PKA clear flag register (PKA_CLRFR)

Address offset: 0x08

Reset value: 0x0000 0000

31	30	29	28	27	26	25	24	23	22	21	20	19	18	17	16
Res.	Res.	Res.	Res.	Res.	Res.	Res.	Res.	Res.	Res.	Res.	ADDR ERRFC	RAM ERRFC	Res.	PROC ENDFC	Res.
											w	w		w	

15	14	13	12	11	10	9	8	7	6	5	4	3	2	1	0
Res.	Res.	Res.	Res.	Res.	Res.	Res.	Res.	Res.	Res.	Res.	Res.	Res.	Res.	Res.	Res.

Bits 31:21 Reserved, must be kept at reset value.

Bit 20 **ADDRERRFC**: Clear Address error flag
0: No action
1: Clear the ADDRERRF flag in PKA_SR

Bit 19 **RAMERRFC**: Clear PKA RAM error flag
0: No action
1: Clear the RAMERRF flag in PKA_SR

Bit 18 Reserved, must be kept at reset value.

Bit 17 **PROCENDFC**: Clear PKA End of Operation flag
0: No action
1: Clear the PROCENDF flag in PKA_SR

Bits 16:0 Reserved, must be kept at reset value.

Note: Reading PKA_CLRFR returns all 0s.

20.7.4 PKA RAM

The PKA RAM is mapped at the offset address of 0x0400 compared to the PKA base address. Only 32-bit word single accesses are supported, through PKA.AHB interface.

RAM size is 3576 bytes (max word offset: 0x11F4).

20.7.5 PKA register map

Table 132. PKA register map and reset values

Offset	Register name	31	30	29	28	27	26	25	24	23	22	21	20	19	18	17	16	15	14	13	12	11	10	9	8	7	6	5	4	3	2	1	0
0x000	PKA_CR	Res.	Res.	Res.	Res.	Res.	Res.	Res.	Res.	Res.	Res.	Res.	ADDRERRIE	RAMERRIE	Res.	PROCENDIE	Res.	Res.	Res.	MODE[5:0]						Res.	Res.	Res.	Res.	Res.	Res.	START	EN
	Reset value												0	0		0				0	0	0	0	0	0							0	0
0x004	PKA_SR	Res.	Res.	Res.	Res.	Res.	Res.	Res.	Res.	Res.	Res.	Res.	ADDRERRF	RAMERRF	Res.	PROCENDF	BUSY	Res.	Res.	Res.	Res.	Res.	Res.	Res.	Res.	Res.	Res.	Res.	Res.	Res.	Res.	Res.	Res.
	Reset value												0	0		0	0																
0x008	PKA_CLRFR	Res.	Res.	Res.	Res.	Res.	Res.	Res.	Res.	Res.	Res.	Res.	ADDRERRFC	RAMERRFC	Res.	PROCENDFC	Res.	Res.	Res.	Res.	Res.	Res.	Res.	Res.	Res.	Res.	Res.	Res.	Res.	Res.	Res.	Res.	Res.
	Reset value												0	0		0																	

Refer to *Section 2.2 on page 55* for the register boundary addresses.

21 Advanced-control timer (TIM1)

In this section, “TIMx” should be understood as “TIM1” since there is only one instance of this type of timer for the products to which this reference manual applies.

21.1 TIM1 introduction

The advanced-control timer (TIM1) consists of a 16-bit auto-reload counter driven by a programmable prescaler.

It may be used for a variety of purposes, including measuring the pulse lengths of input signals (input capture) or generating output waveforms (output compare, PWM, complementary PWM with dead-time insertion).

Pulse lengths and waveform periods can be modulated from a few microseconds to several milliseconds using the timer prescaler and the RCC clock controller prescalers.

The advanced-control (TIM1) and general-purpose (TIMy) timers are completely independent, and do not share any resources. They can be synchronized together as described in *Section 21.3.26: Timer synchronization*.

21.2 TIM1 main features

TIM1 timer features include:

- 16-bit up, down, up/down auto-reload counter.
- 16-bit programmable prescaler allowing dividing (also “on the fly”) the counter clock frequency either by any factor between 1 and 65536.
- Up to 6 independent channels for:
  - Input Capture (but channels 5 and 6)
  - Output Compare
  - PWM generation (Edge and Center-aligned Mode)
  - One-pulse mode output
- Complementary outputs with programmable dead-time
- Synchronization circuit to control the timer with external signals and to interconnect several timers together.
- Repetition counter to update the timer registers only after a given number of cycles of the counter.
- 2 break inputs to put the timer’s output signals in a safe user selectable configuration.
- Interrupt/DMA generation on the following events:
  - Update: counter overflow/underflow, counter initialization (by software or internal/external trigger)
  - Trigger event (counter start, stop, initialization or count by internal/external trigger)
  - Input capture
  - Output compare
- Supports incremental (quadrature) encoder and Hall-sensor circuitry for positioning purposes
- Trigger input for external clock or cycle-by-cycle current management

Figure 96. Advanced-control timer block diagram

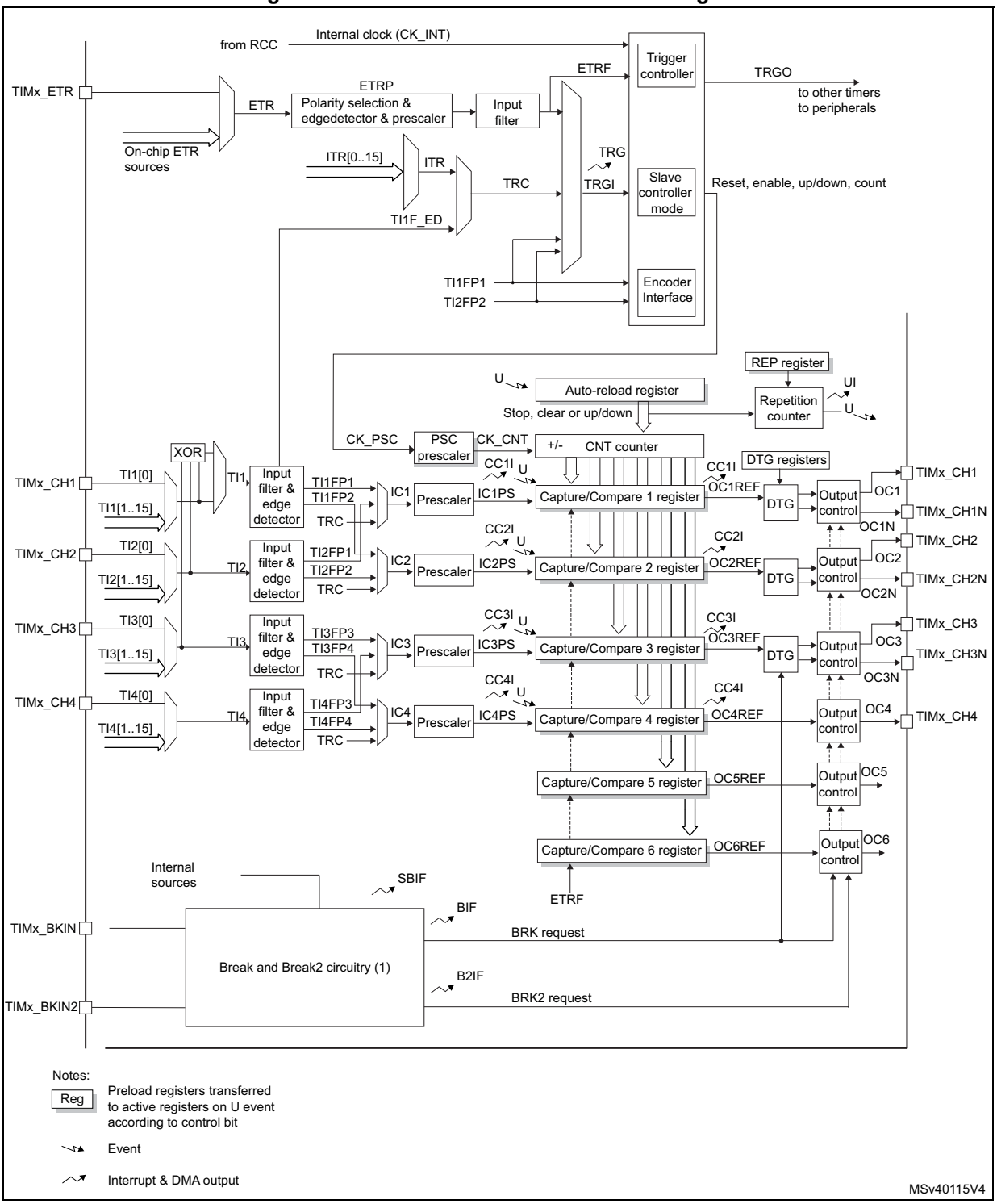

1. The internal break event source can be:
   - A clock failure event generated by CSS. For further information on the CSS, refer to *Section 8.2.10: Clock security system (CSS) on HSE*
   - A PVD output
   - SRAM parity error signal
   - CPU1 Cortex®-M4 LOCKUP (Hardfault) output.
   - COMPx output, x = 1,2.

21.3 TIM1 functional description

21.3.1 Time-base unit

The main block of the programmable advanced-control timer is a 16-bit counter with its related auto-reload register. The counter can count up, down or both up and down. The counter clock can be divided by a prescaler.

The counter, the auto-reload register and the prescaler register can be written or read by software. This is true even when the counter is running.

The time-base unit includes:

- Counter register (TIMx_CNT)
- Prescaler register (TIMx_PSC)
- Auto-reload register (TIMx_ARR)
- Repetition counter register (TIMx_RCR)

The auto-reload register is preloaded. Writing to or reading from the auto-reload register accesses the preload register. The content of the preload register are transferred into the shadow register permanently or at each update event (UEV), depending on the auto-reload preload enable bit (ARPE) in TIMx_CR1 register. The update event is sent when the counter reaches the overflow (or underflow when downcounting) and if the UDIS bit equals 0 in the TIMx_CR1 register. It can also be generated by software. The generation of the update event is described in detailed for each configuration.

The counter is clocked by the prescaler output CK_CNT, which is enabled only when the counter enable bit (CEN) in TIMx_CR1 register is set (refer also to the slave mode controller description to get more details on counter enabling).

Note that the counter starts counting 1 clock cycle after setting the CEN bit in the TIMx_CR1 register.

Prescaler description

The prescaler can divide the counter clock frequency by any factor between 1 and 65536. It is based on a 16-bit counter controlled through a 16-bit register (in the TIMx_PSC register). It can be changed on the fly as this control register is buffered. The new prescaler ratio is taken into account at the next update event.

Figure 97 and *Figure 98* give some examples of the counter behavior when the prescaler ratio is changed on the fly:

Figure 97. Counter timing diagram with prescaler division change from 1 to 2

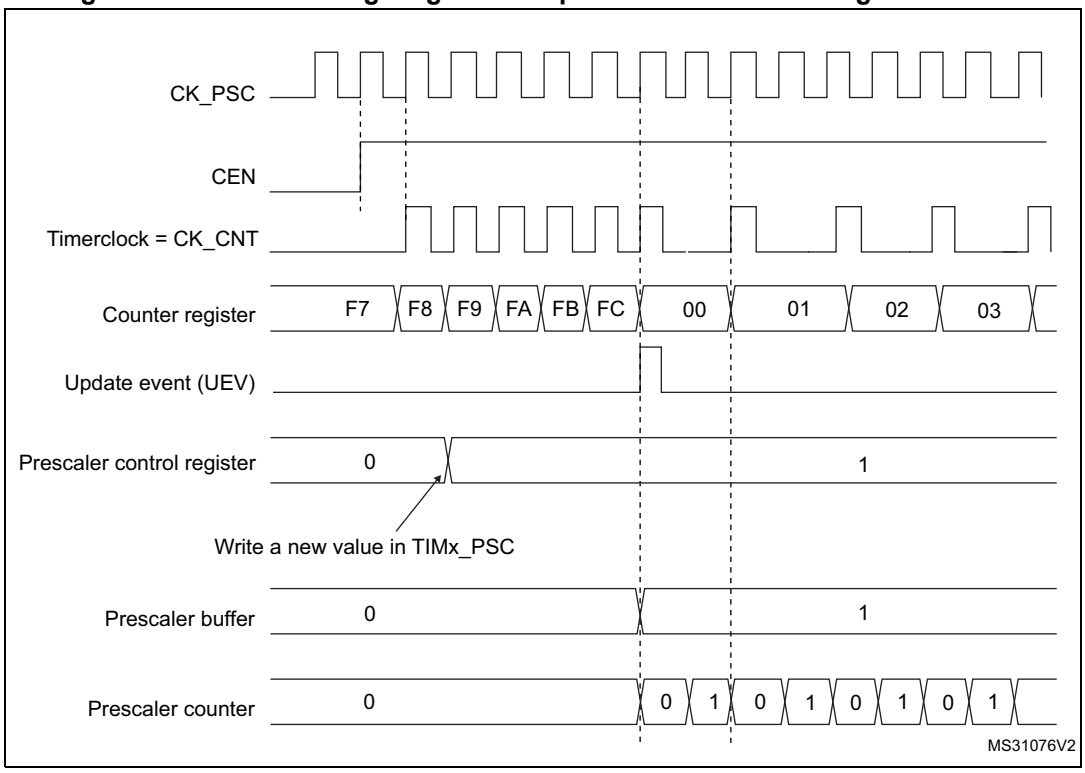

Figure 98. Counter timing diagram with prescaler division change from 1 to 4

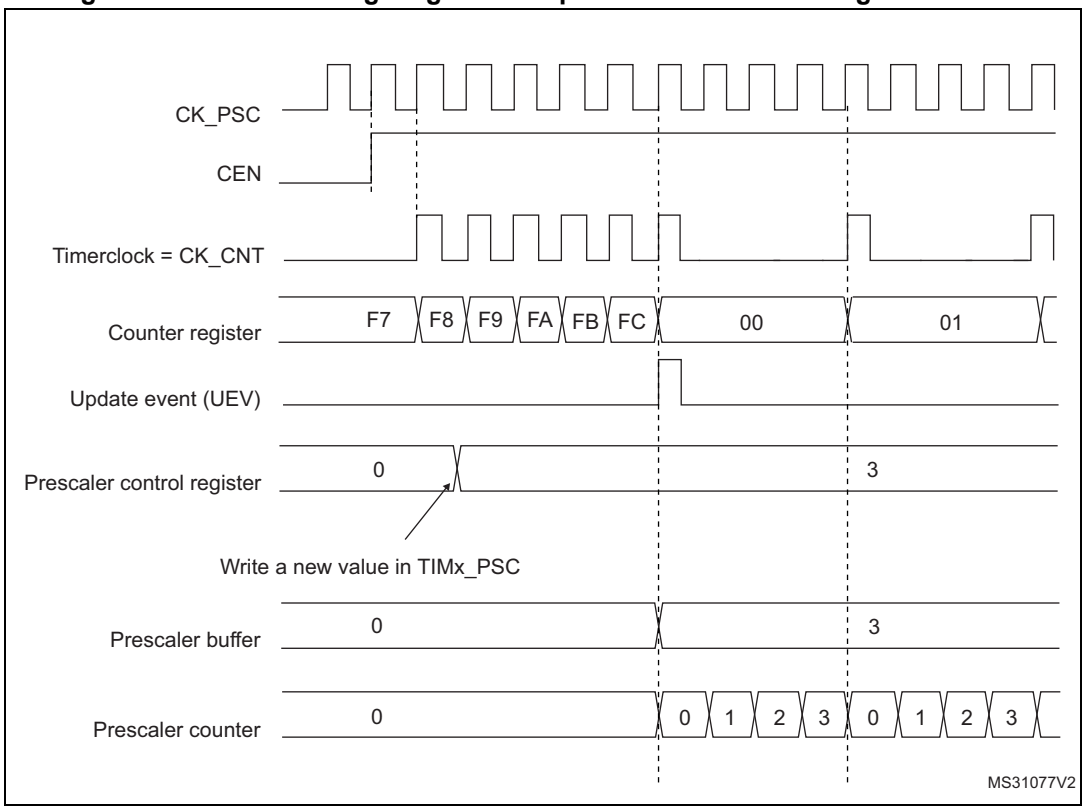

21.3.2 Counter modes

Upcounting mode

In upcounting mode, the counter counts from 0 to the auto-reload value (content of the TIMx_ARR register), then restarts from 0 and generates a counter overflow event.

If the repetition counter is used, the update event (UEV) is generated after upcounting is repeated for the number of times programmed in the repetition counter register (TIMx_RCR) + 1. Else the update event is generated at each counter overflow.

Setting the UG bit in the TIMx_EGR register (by software or by using the slave mode controller) also generates an update event.

The UEV event can be disabled by software by setting the UDIS bit in the TIMx_CR1 register. This is to avoid updating the shadow registers while writing new values in the preload registers. Then no update event occurs until the UDIS bit has been written to 0. However, the counter restarts from 0, as well as the counter of the prescaler (but the prescale rate does not change). In addition, if the URS bit (update request selection) in TIMx_CR1 register is set, setting the UG bit generates an update event UEV but without setting the UIF flag (thus no interrupt or DMA request is sent). This is to avoid generating both update and capture interrupts when clearing the counter on the capture event.

When an update event occurs, all the registers are updated and the update flag (UIF bit in TIMx_SR register) is set (depending on the URS bit):

- The repetition counter is reloaded with the content of TIMx_RCR register,
- The auto-reload shadow register is updated with the preload value (TIMx_ARR),
- The buffer of the prescaler is reloaded with the preload value (content of the TIMx_PSC register).

The following figures show some examples of the counter behavior for different clock frequencies when TIMx_ARR=0x36.

Figure 99. Counter timing diagram, internal clock divided by 1

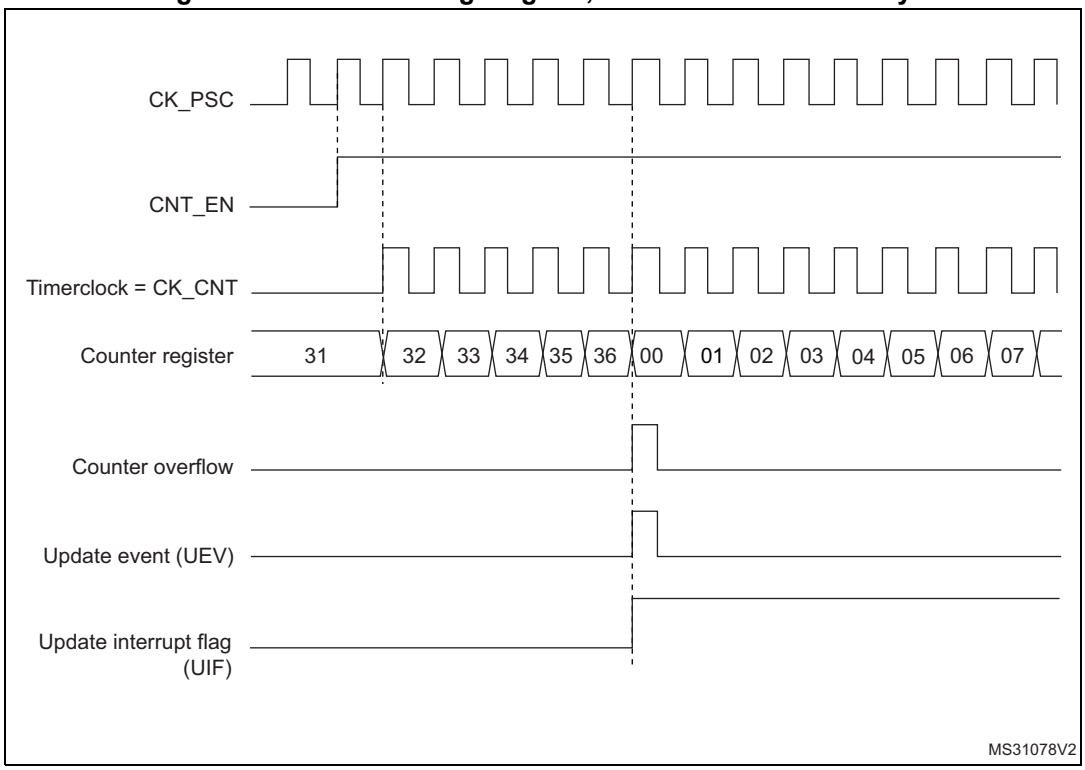

Figure 100. Counter timing diagram, internal clock divided by 2

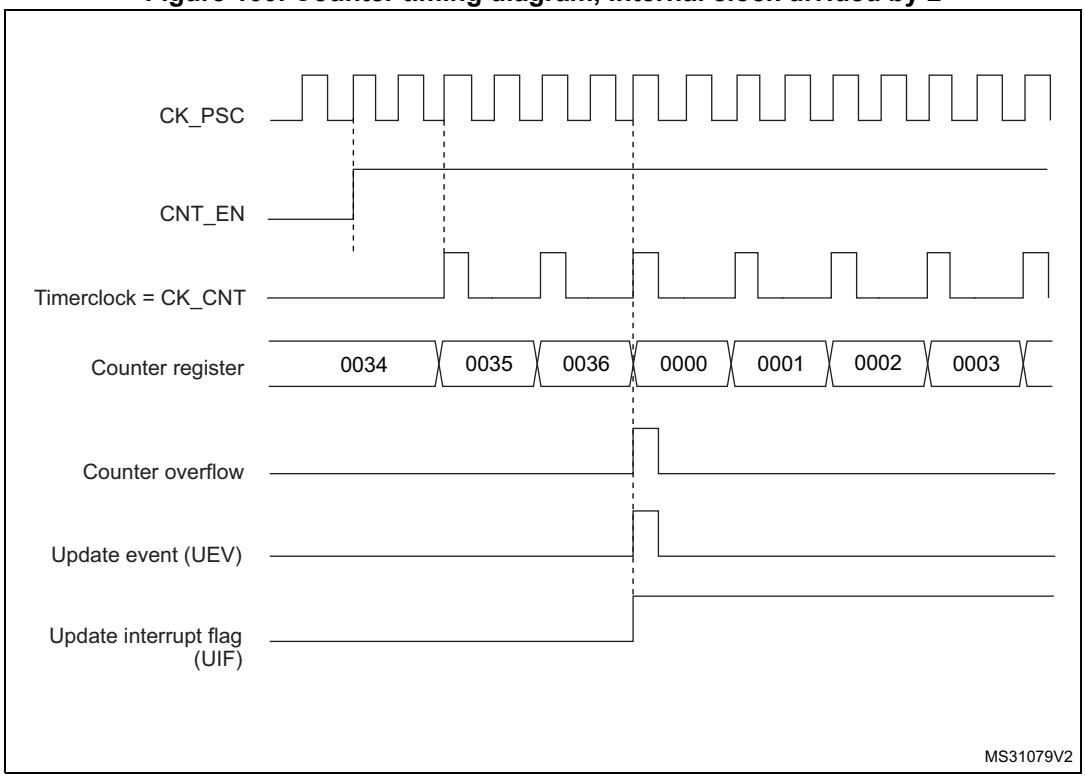

Figure 101. Counter timing diagram, internal clock divided by 4

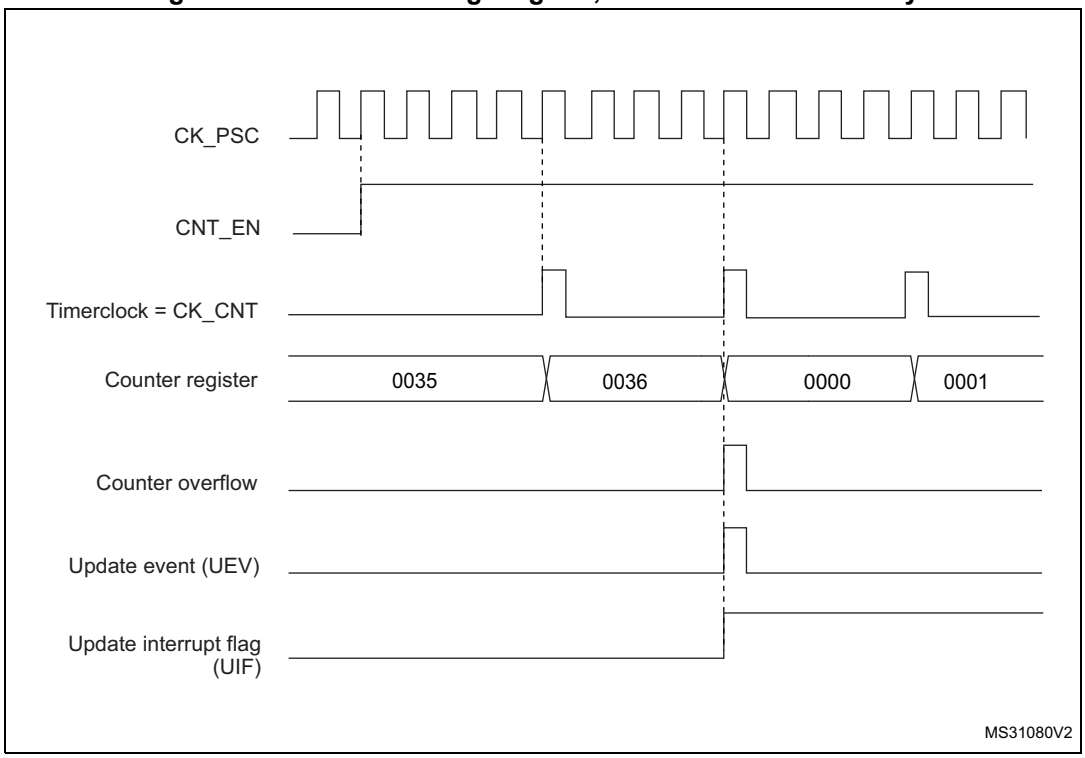

Figure 102. Counter timing diagram, internal clock divided by N

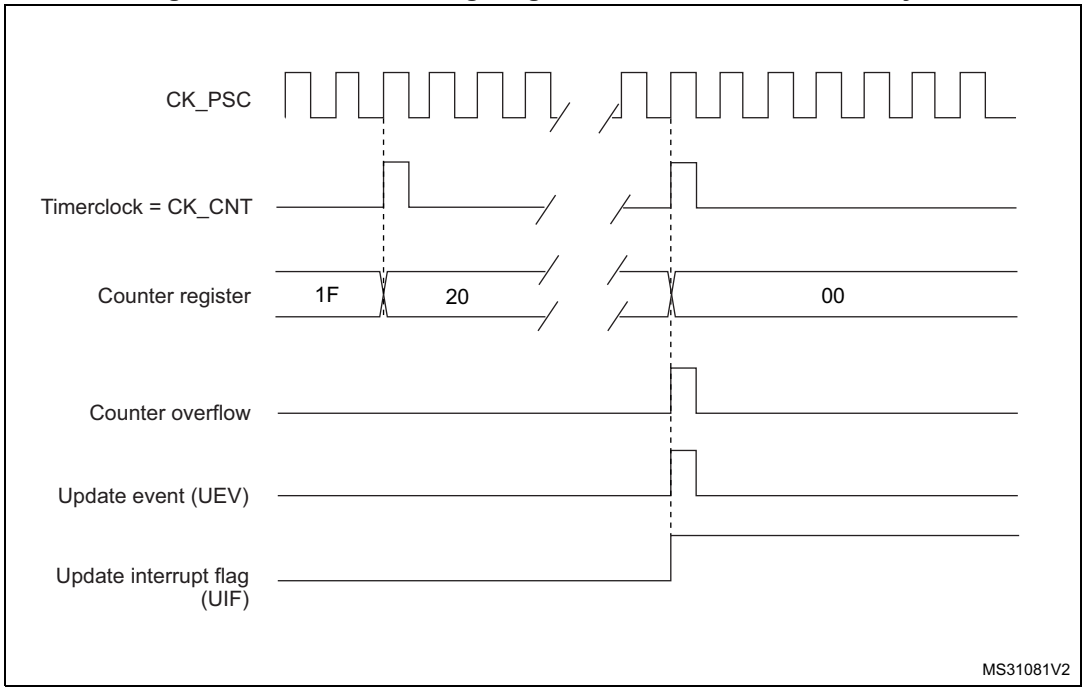

Figure 103. Counter timing diagram, update event when ARPE=0 (TIMx_ARR not preloaded)

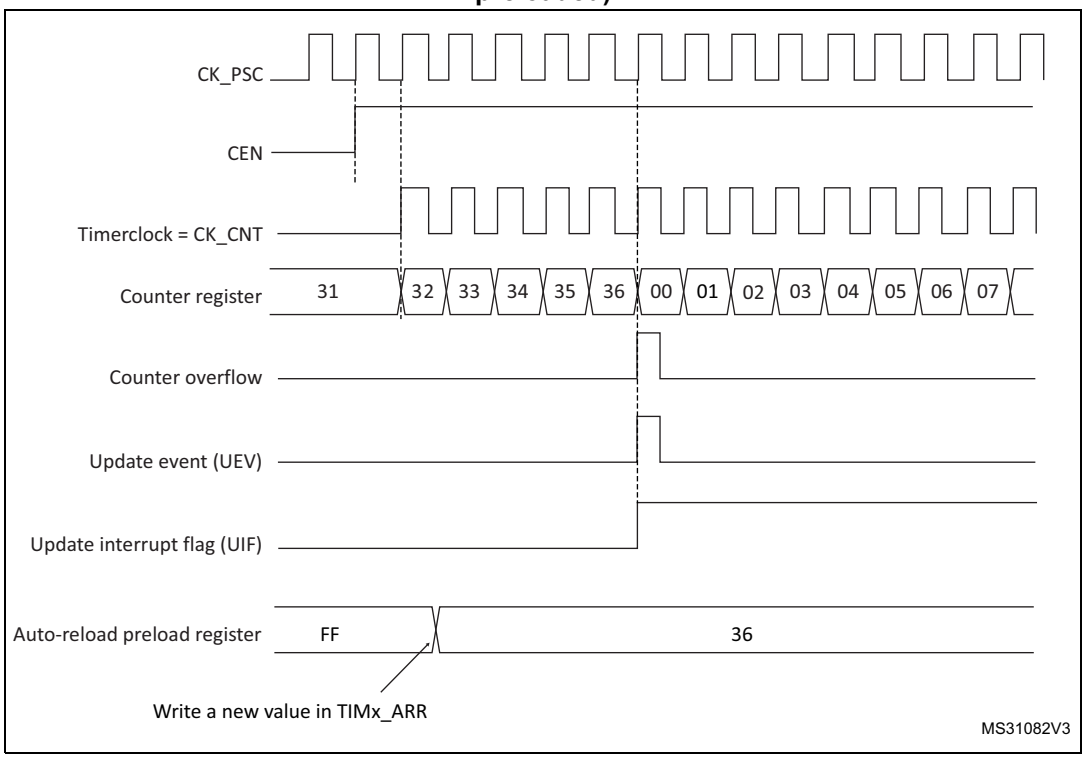

Figure 104. Counter timing diagram, update event when ARPE=1 (TIMx_ARR preloaded)

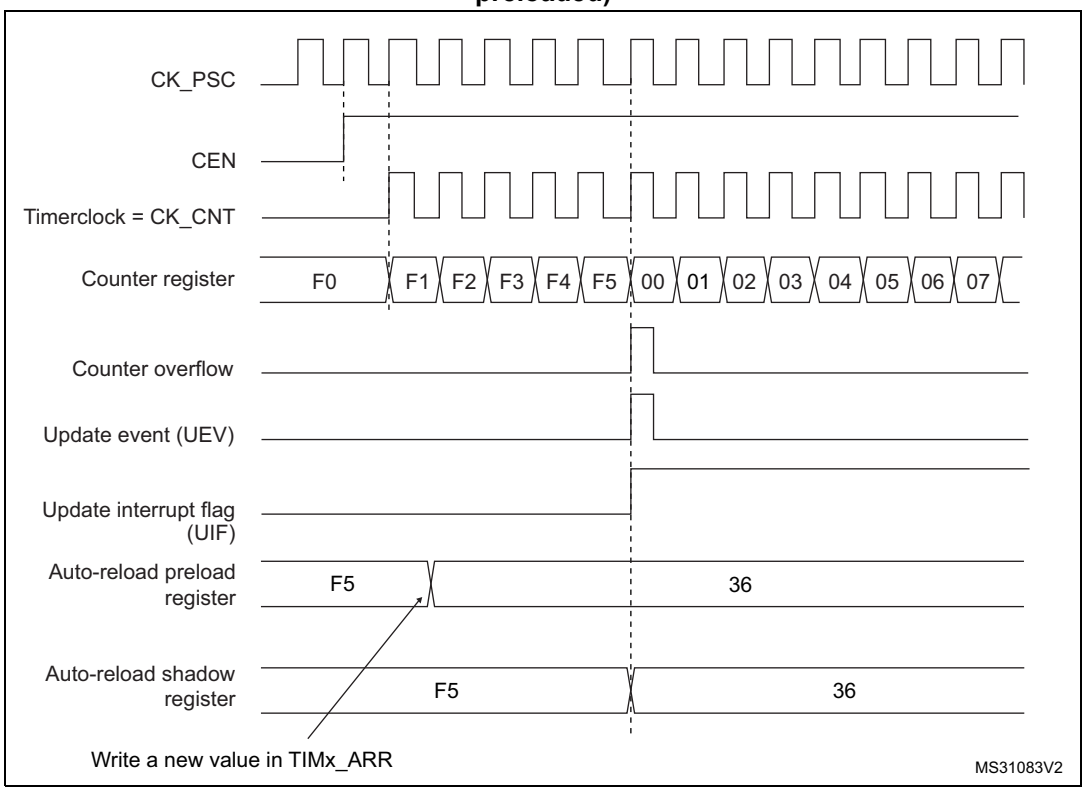

Downcounting mode

In downcounting mode, the counter counts from the auto-reload value (content of the TIMx_ARR register) down to 0, then restarts from the auto-reload value and generates a counter underflow event.

If the repetition counter is used, the update event (UEV) is generated after downcounting is repeated for the number of times programmed in the repetition counter register (TIMx_RCR) + 1. Else the update event is generated at each counter underflow.

Setting the UG bit in the TIMx_EGR register (by software or by using the slave mode controller) also generates an update event.

The UEV update event can be disabled by software by setting the UDIS bit in TIMx_CR1 register. This is to avoid updating the shadow registers while writing new values in the preload registers. Then no update event occurs until UDIS bit has been written to 0. However, the counter restarts from the current auto-reload value, whereas the counter of the prescaler restarts from 0 (but the prescale rate doesn't change).

In addition, if the URS bit (update request selection) in TIMx_CR1 register is set, setting the UG bit generates an update event UEV but without setting the UIF flag (thus no interrupt or DMA request is sent). This is to avoid generating both update and capture interrupts when clearing the counter on the capture event.

When an update event occurs, all the registers are updated and the update flag (UIF bit in TIMx_SR register) is set (depending on the URS bit):

- The repetition counter is reloaded with the content of TIMx_RCR register.
- The buffer of the prescaler is reloaded with the preload value (content of the TIMx_PSC register).
- The auto-reload active register is updated with the preload value (content of the TIMx_ARR register). Note that the auto-reload is updated before the counter is reloaded, so that the next period is the expected one.

The following figures show some examples of the counter behavior for different clock frequencies when TIMx_ARR=0x36.

Figure 105. Counter timing diagram, internal clock divided by 1

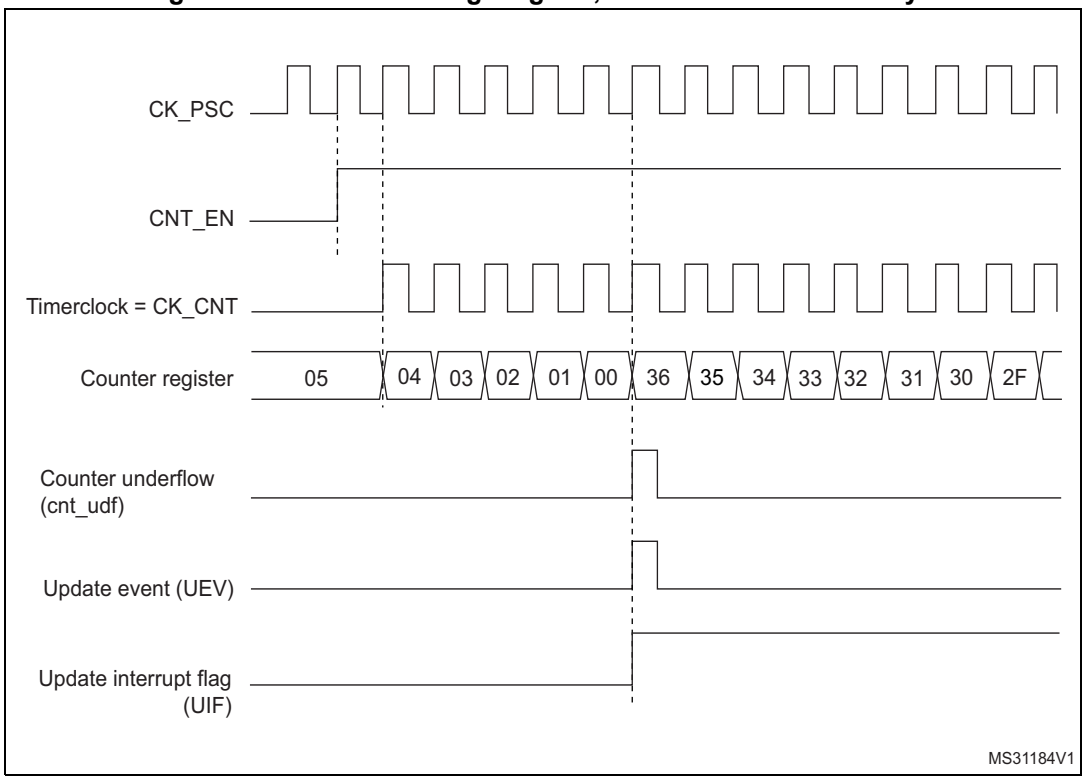

Figure 106. Counter timing diagram, internal clock divided by 2

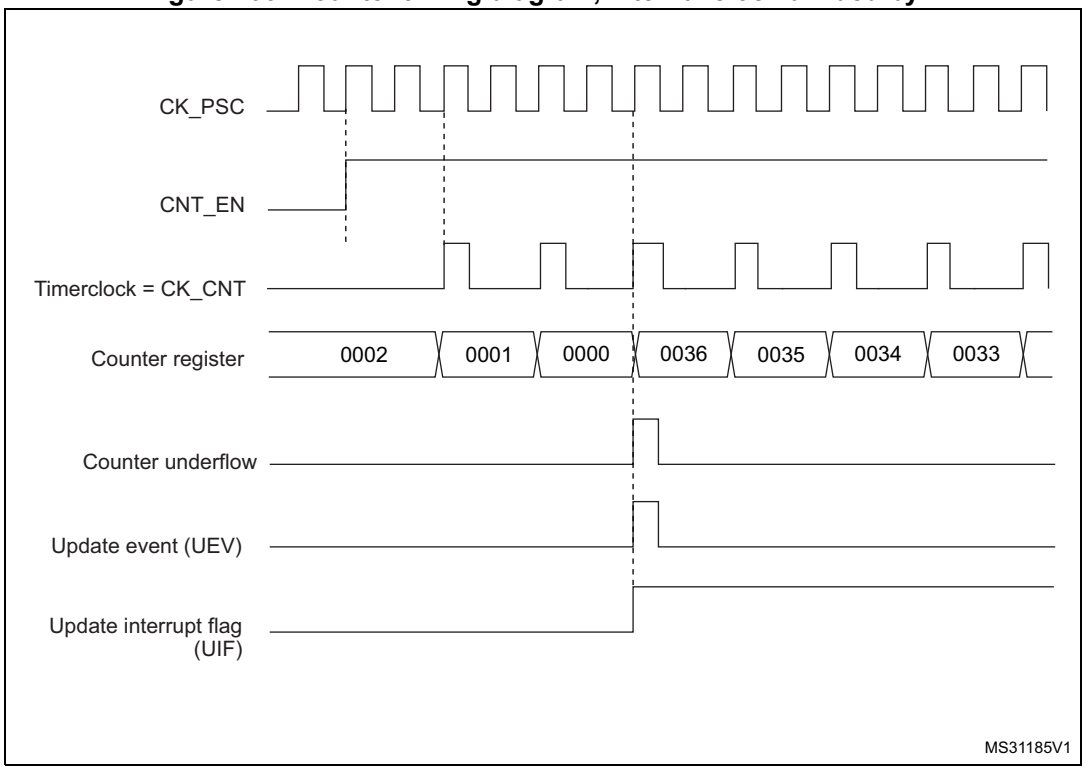

Figure 107. Counter timing diagram, internal clock divided by 4

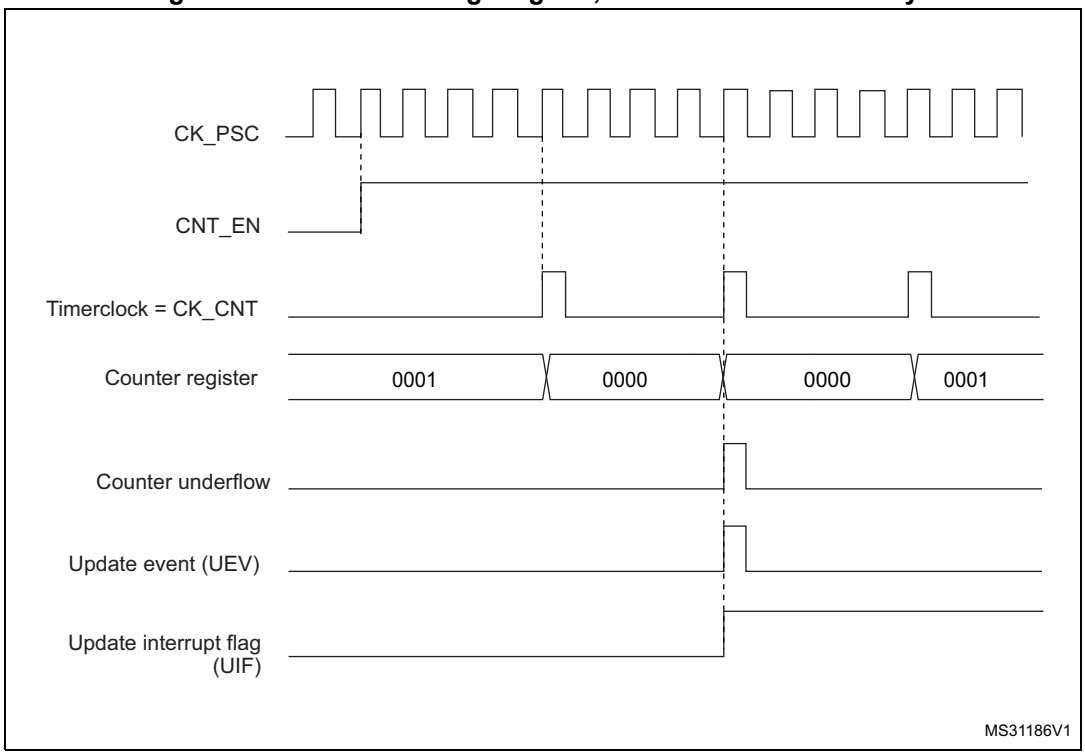

Figure 108. Counter timing diagram, internal clock divided by N

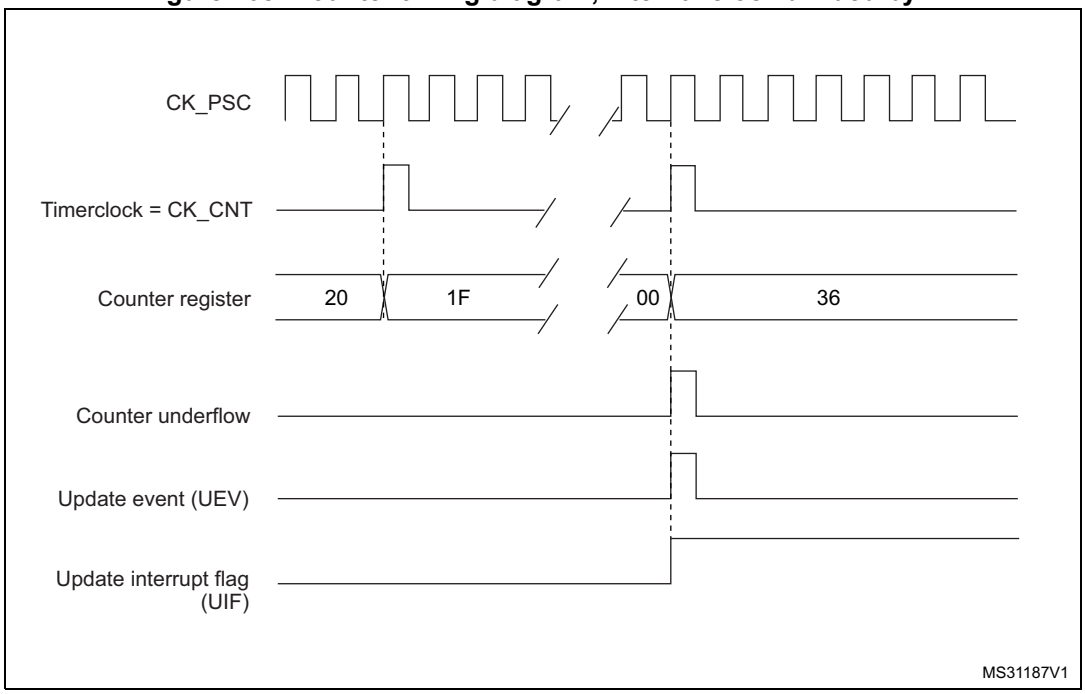

Figure 109. Counter timing diagram, update event when repetition counter is not used

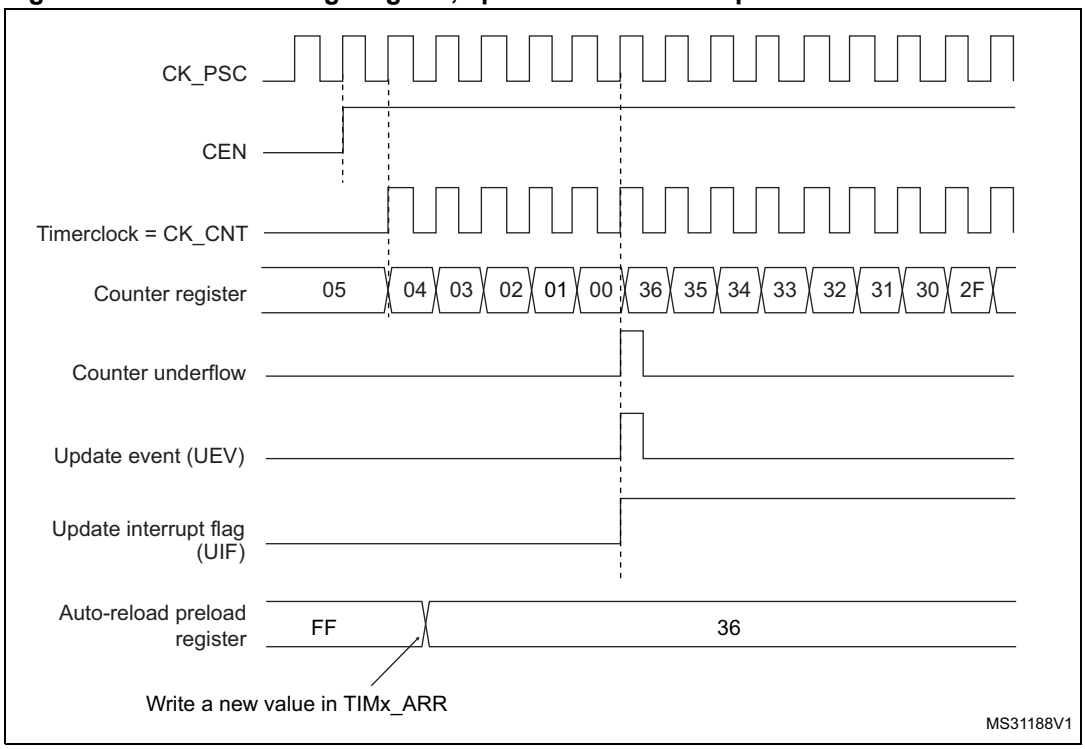

Center-aligned mode (up/down counting)

In center-aligned mode, the counter counts from 0 to the auto-reload value (content of the TIMx_ARR register) – 1, generates a counter overflow event, then counts from the auto-reload value down to 1 and generates a counter underflow event. Then it restarts counting from 0.

Center-aligned mode is active when the CMS bits in TIMx_CR1 register are not equal to '00'. The Output compare interrupt flag of channels configured in output is set when: the counter counts down (Center aligned mode 1, CMS = "01"), the counter counts up (Center aligned mode 2, CMS = "10") the counter counts up and down (Center aligned mode 3, CMS = "11").

In this mode, the DIR direction bit in the TIMx_CR1 register cannot be written. It is updated by hardware and gives the current direction of the counter.

The update event can be generated at each counter overflow and at each counter underflow or by setting the UG bit in the TIMx_EGR register (by software or by using the slave mode controller) also generates an update event. In this case, the counter restarts counting from 0, as well as the counter of the prescaler.

The UEV update event can be disabled by software by setting the UDIS bit in the TIMx_CR1 register. This is to avoid updating the shadow registers while writing new values in the preload registers. Then no update event occurs until UDIS bit has been written to 0. However, the counter continues counting up and down, based on the current auto-reload value.

In addition, if the URS bit (update request selection) in TIMx_CR1 register is set, setting the UG bit generates an UEV update event but without setting the UIF flag (thus no interrupt or

DMA request is sent). This is to avoid generating both update and capture interrupts when clearing the counter on the capture event.

When an update event occurs, all the registers are updated and the update flag (UIF bit in TIMx_SR register) is set (depending on the URS bit):

- The repetition counter is reloaded with the content of TIMx_RCR register
- The buffer of the prescaler is reloaded with the preload value (content of the TIMx_PSC register)
- The auto-reload active register is updated with the preload value (content of the TIMx_ARR register). Note that if the update source is a counter overflow, the auto-reload is updated before the counter is reloaded, so that the next period is the expected one (the counter is loaded with the new value).

The following figures show some examples of the counter behavior for different clock frequencies.

Figure 110. Counter timing diagram, internal clock divided by 1, TIMx_ARR = 0x6

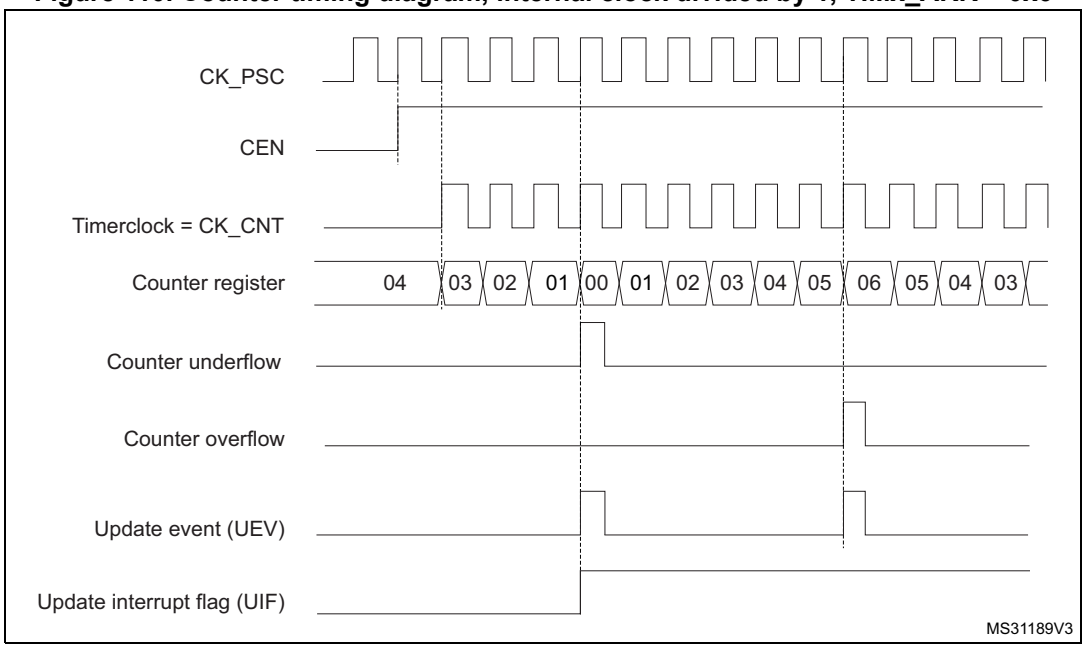

1. Here, center-aligned mode 1 is used (for more details refer to *Section 21.4: TIM1 registers*).

Figure 111. Counter timing diagram, internal clock divided by 2

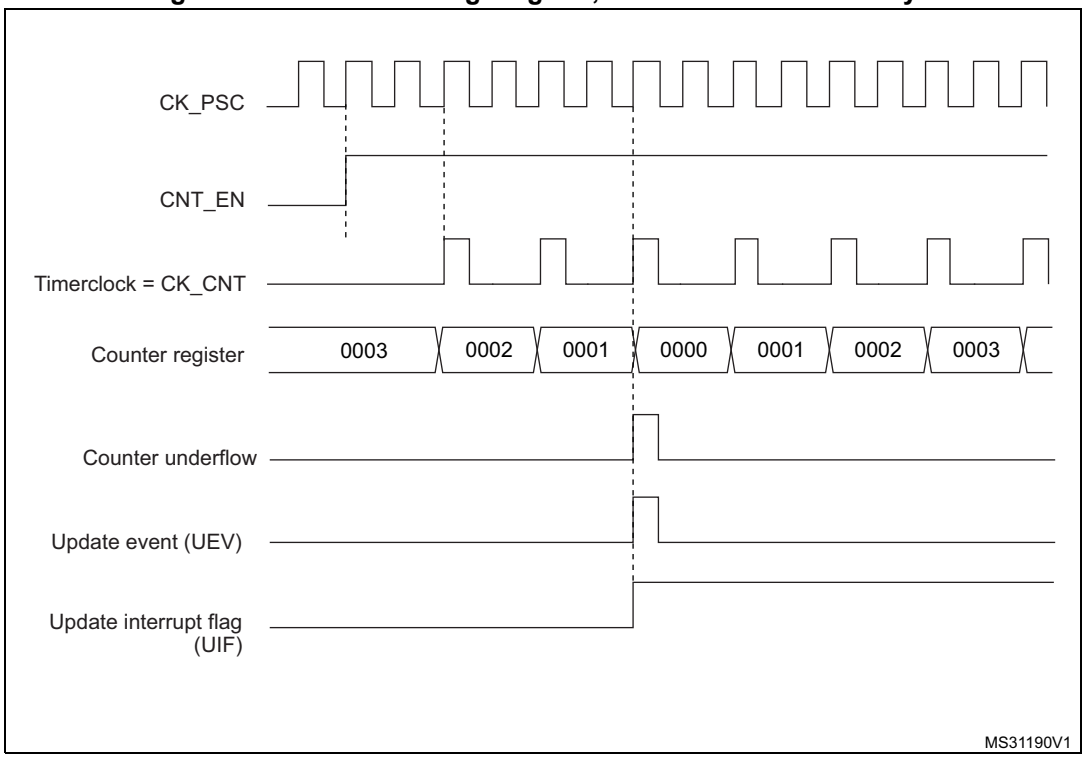

Figure 112. Counter timing diagram, internal clock divided by 4, TIMx_ARR=0x36

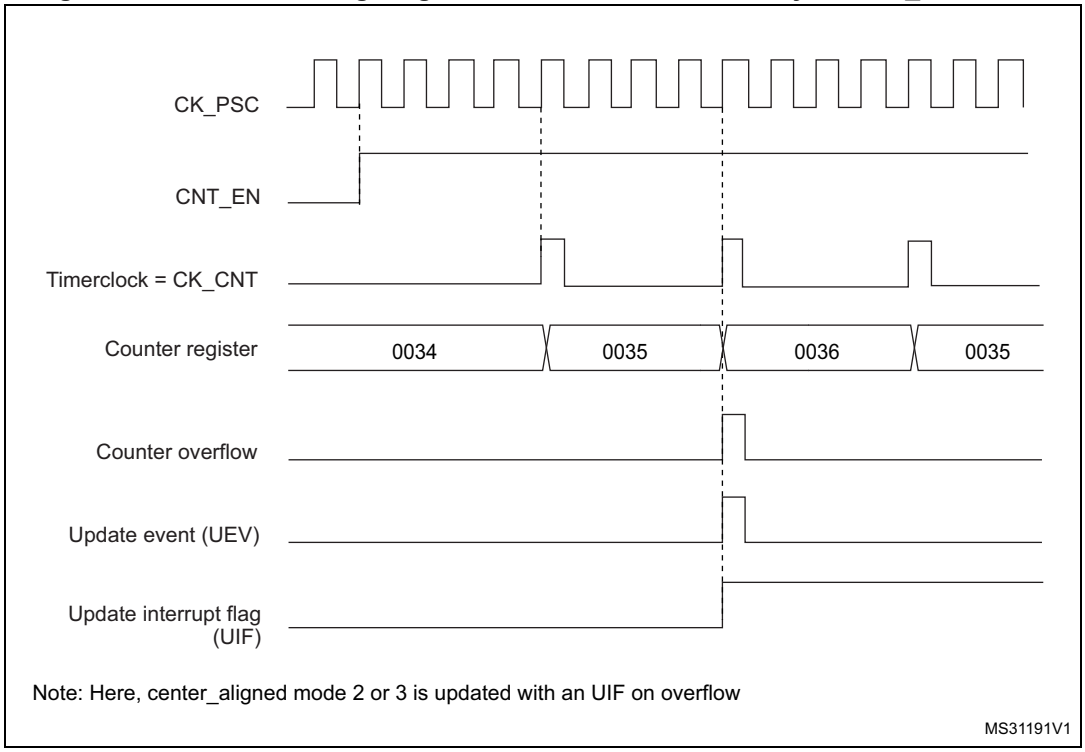

Figure 113. Counter timing diagram, internal clock divided by N

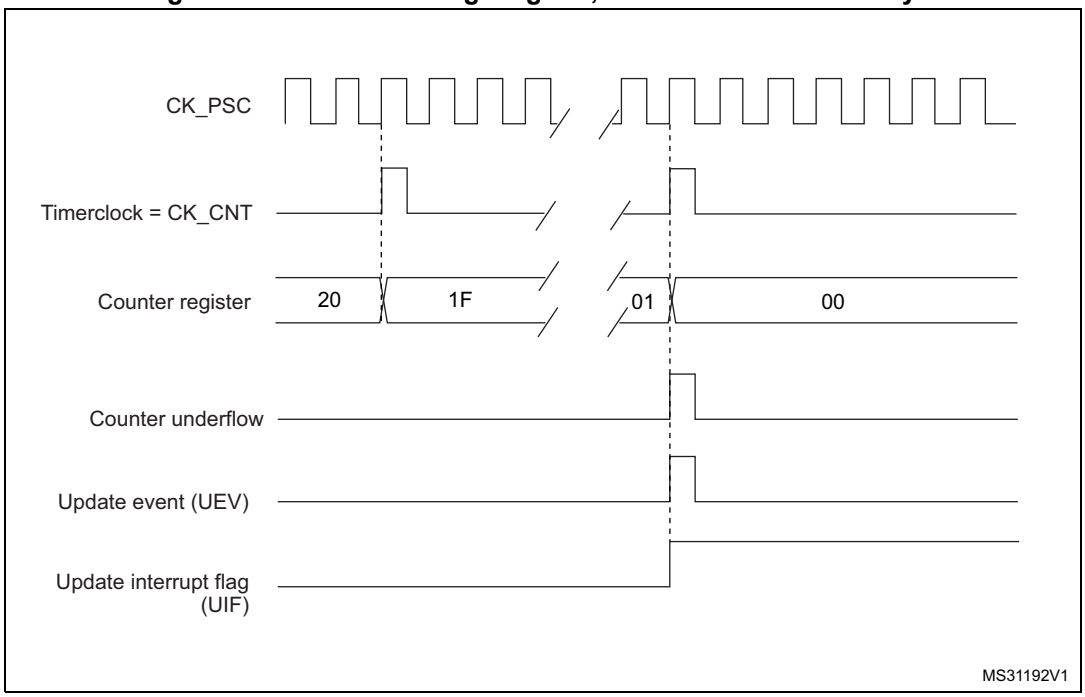

Figure 114. Counter timing diagram, update event with ARPE=1 (counter underflow)

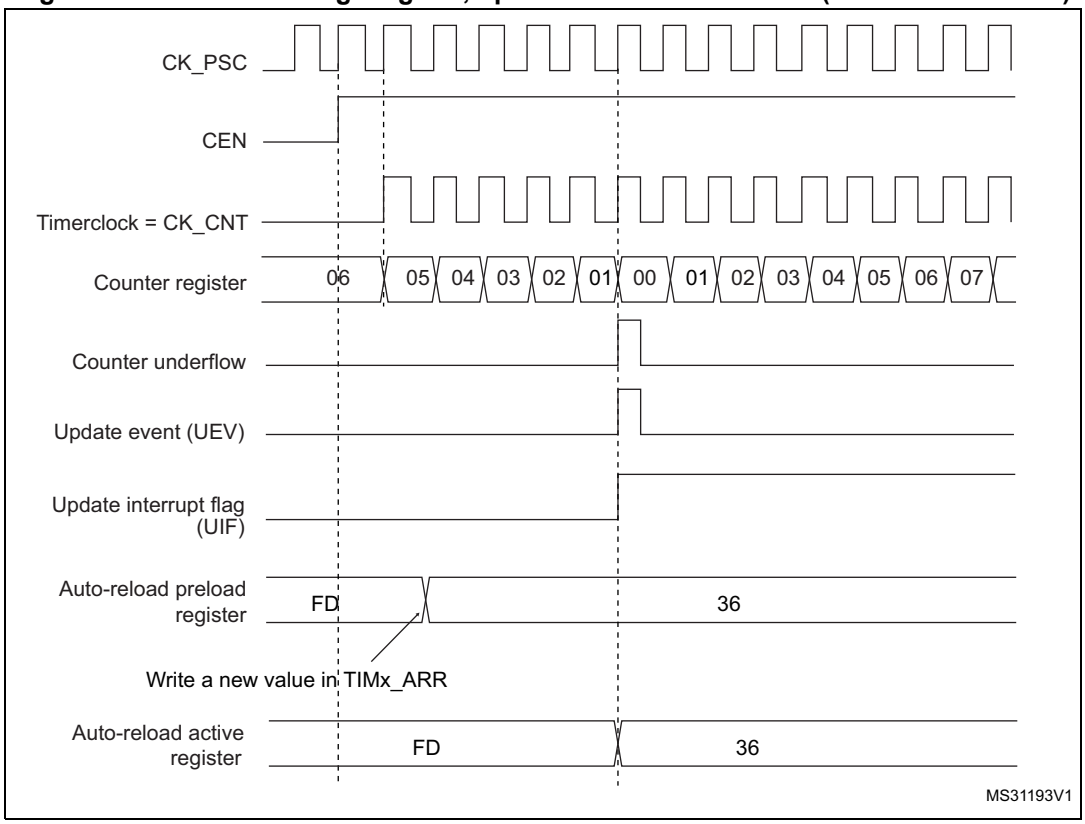

Figure 115. Counter timing diagram, Update event with ARPE=1 (counter overflow)

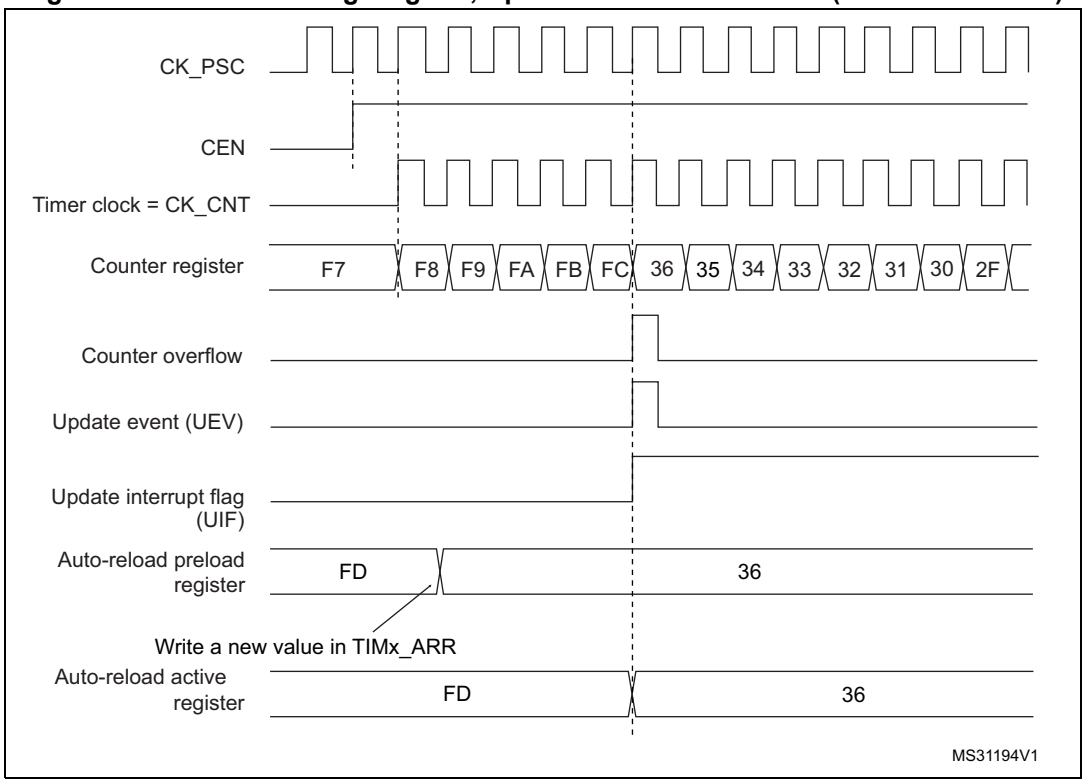

21.3.3 Repetition counter

Section 21.3.1: Time-base unit describes how the update event (UEV) is generated with respect to the counter overflows/underflows. It is actually generated only when the repetition counter has reached zero. This can be useful when generating PWM signals.

This means that data are transferred from the preload registers to the shadow registers (TIMx_ARR auto-reload register, TIMx_PSC prescaler register, but also TIMx_CCRx capture/compare registers in compare mode) every N+1 counter overflows or underflows, where N is the value in the TIMx_RCR repetition counter register.

The repetition counter is decremented:

- At each counter overflow in upcounting mode,
- At each counter underflow in downcounting mode,
- At each counter overflow and at each counter underflow in center-aligned mode. Although this limits the maximum number of repetition to 32768 PWM cycles, it makes it possible to update the duty cycle twice per PWM period. When refreshing compare registers only once per PWM period in center-aligned mode, maximum resolution is $2xT_{ck}$, due to the symmetry of the pattern.

The repetition counter is an auto-reload type; the repetition rate is maintained as defined by the TIMx_RCR register value (refer to *Figure 116*). When the update event is generated by software (by setting the UG bit in TIMx_EGR register) or by hardware through the slave mode controller, it occurs immediately whatever the value of the repetition counter is and the repetition counter is reloaded with the content of the TIMx_RCR register.

In Center aligned mode, for odd values of RCR, the update event occurs either on the overflow or on the underflow depending on when the RCR register was written and when the counter was launched: if the RCR was written before launching the counter, the UEV occurs on the underflow. If the RCR was written after launching the counter, the UEV occurs on the overflow.

For example, for RCR = 3, the UEV is generated each 4th overflow or underflow event depending on when the RCR was written.

Figure 116. Update rate examples depending on mode and TIMx_RCR register settings

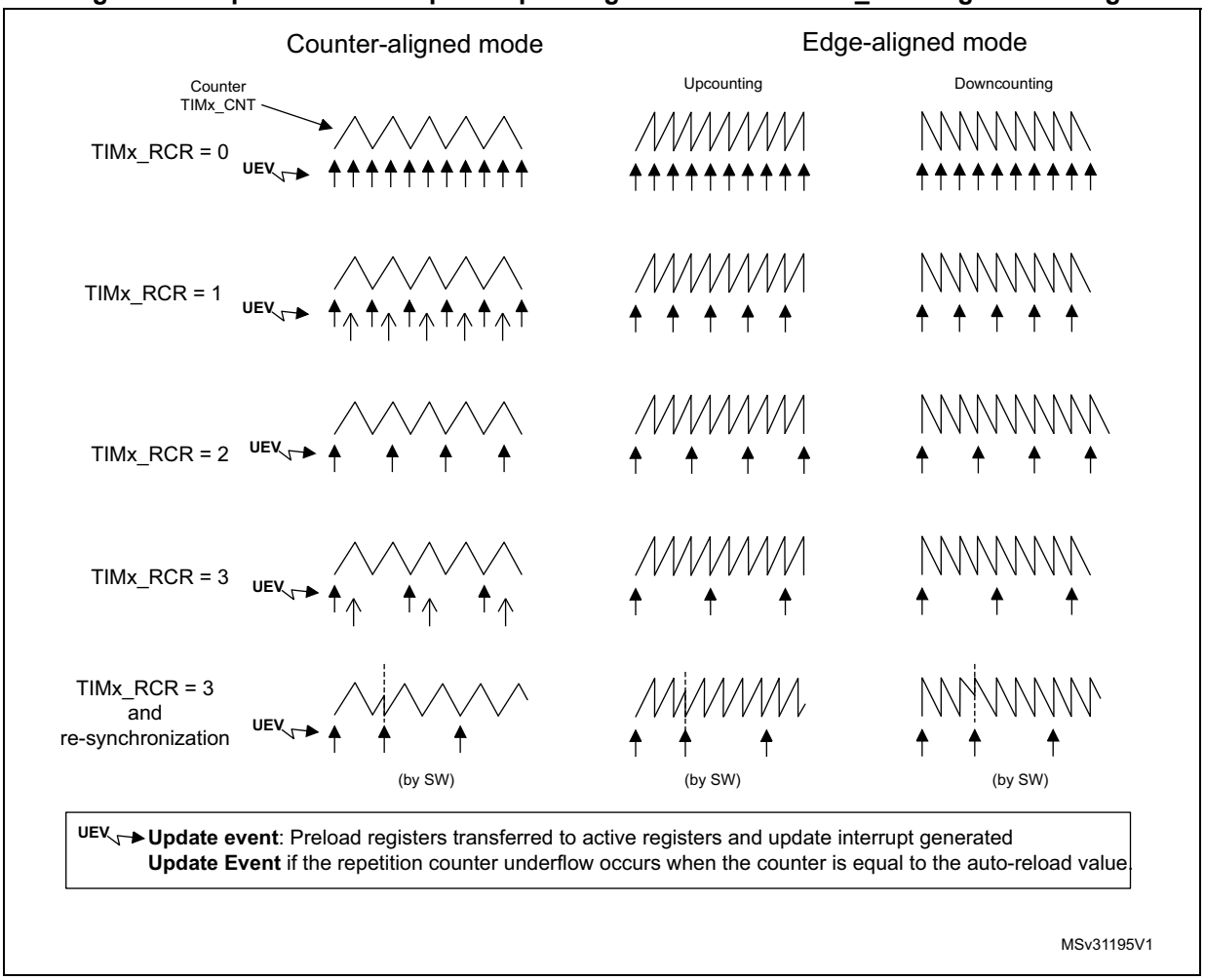

21.3.4 External trigger input

The timer features an external trigger input ETR. It can be used as:

- external clock (external clock mode 2, see *Section 21.3.5*)
- trigger for the slave mode (see *Section 21.3.26*)
- PWM reset input for cycle-by-cycle current regulation (see *Section 21.3.7*)

Figure 117 below describes the ETR input conditioning. The input polarity is defined with the ETP bit in TIMxSMCR register. The trigger can be prescaled with the divider programmed by the ETPS[1:0] bitfield and digitally filtered with the ETF[3:0] bitfield.

Figure 117. External trigger input block

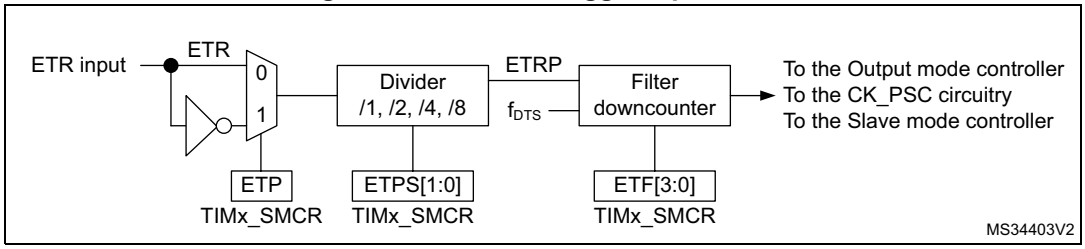

The ETR input comes from multiple sources: input pins (default configuration), comparator outputs and analog watchdogs. The selection is done with the ETRSEL[3:0] and the TIM1_OR1[1:0] bitfields.

Figure 118. TIM1 ETR input circuitry

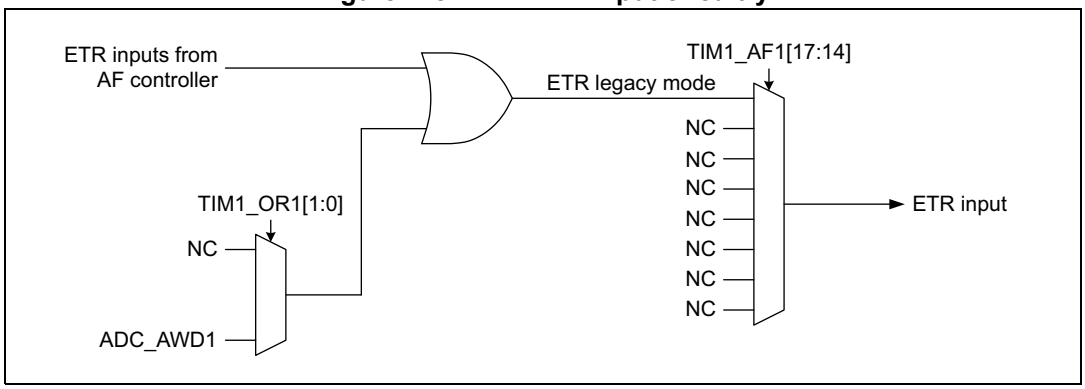

21.3.5 Clock selection

The counter clock can be provided by the following clock sources:

- Internal clock (CK_INT)
- External clock mode1: external input pin
- External clock mode2: external trigger input ETR
- Encoder mode

Internal clock source (CK_INT)

If the slave mode controller is disabled (SMS=000), then the CEN, DIR (in the TIMx_CR1 register) and UG bits (in the TIMx_EGR register) are actual control bits and can be changed only by software (except UG which remains cleared automatically). As soon as the CEN bit is written to 1, the prescaler is clocked by the internal clock CK_INT.

Figure 119 shows the behavior of the control circuit and the upcounter in normal mode, without prescaler.

Figure 119. Control circuit in normal mode, internal clock divided by 1

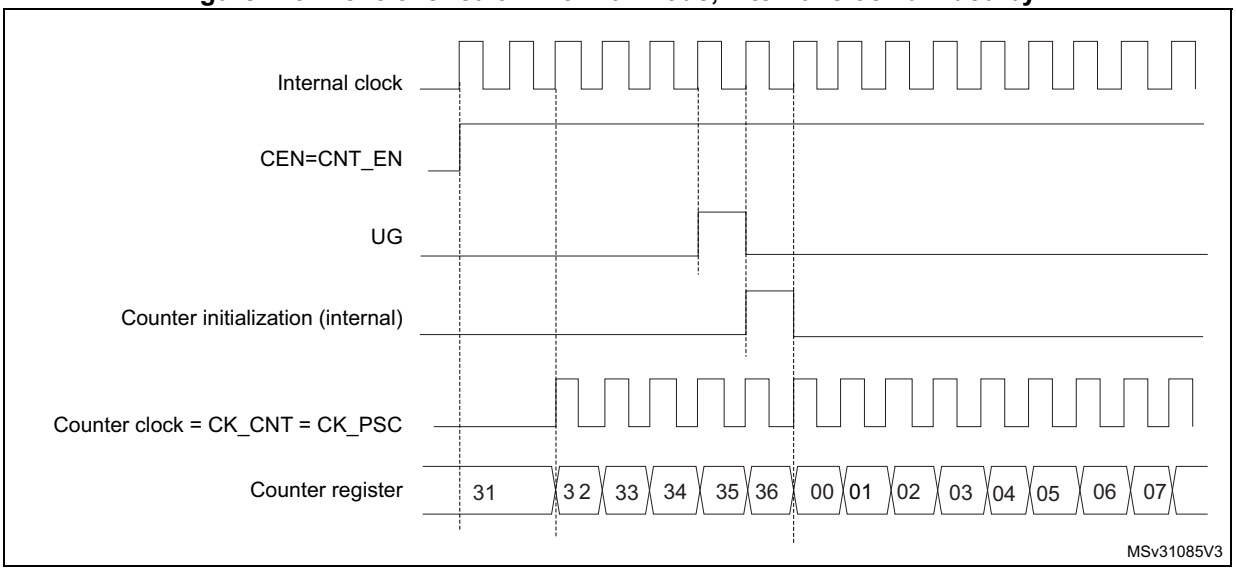

External clock source mode 1

This mode is selected when SMS=111 in the TIMx_SMCR register. The counter can count at each rising or falling edge on a selected input.

Figure 120. TI2 external clock connection example

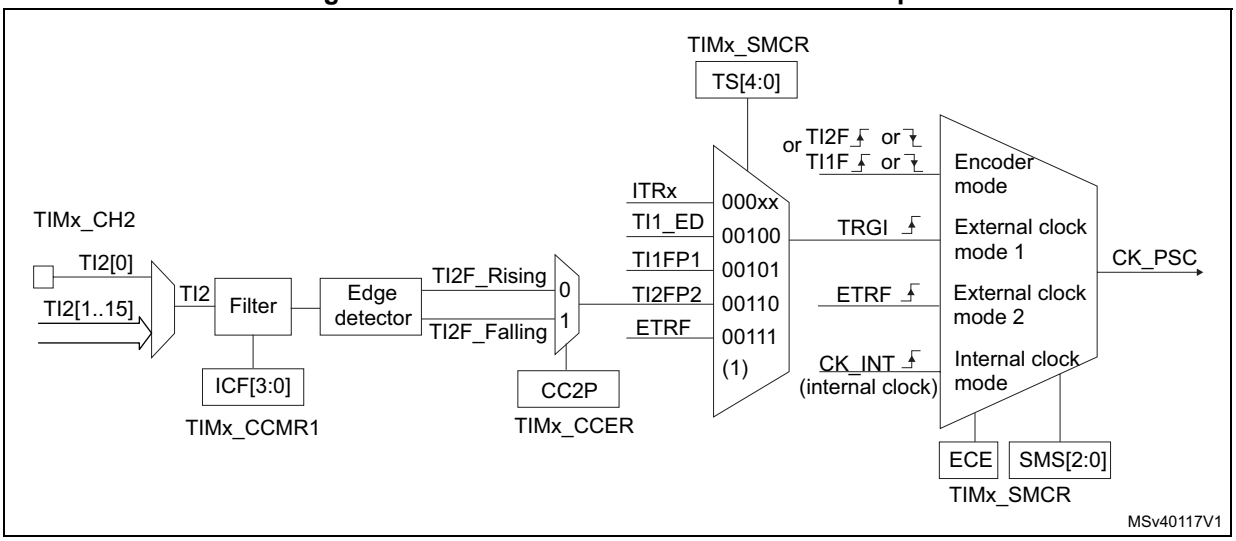

1. Codes ranging from 01000 to 11111 are reserved

For example, to configure the upcounter to count in response to a rising edge on the TI2 input, use the following procedure:

1. Select the proper TI2x source (internal or external) with the TI2SEL[3:0] bits in the TIMx_TISEL register.
2. Configure channel 2 to detect rising edges on the TI2 input by writing CC2S = ‘01’ in the TIMx_CCMR1 register.
3. Configure the input filter duration by writing the IC2F[3:0] bits in the TIMx_CCMR1 register (if no filter is needed, keep IC2F=0000).
4. Select rising edge polarity by writing CC2P=0 and CC2NP=0 in the TIMx_CCER register.
5. Configure the timer in external clock mode 1 by writing SMS=111 in the TIMx_SMCR register.
6. Select TI2 as the trigger input source by writing TS=00110 in the TIMx_SMCR register.
7. Enable the counter by writing CEN=1 in the TIMx_CR1 register.

Note: The capture prescaler is not used for triggering, so the user does not need to configure it.

When a rising edge occurs on TI2, the counter counts once and the TIF flag is set.

The delay between the rising edge on TI2 and the actual clock of the counter is due to the resynchronization circuit on TI2 input.

Figure 121. Control circuit in external clock mode 1

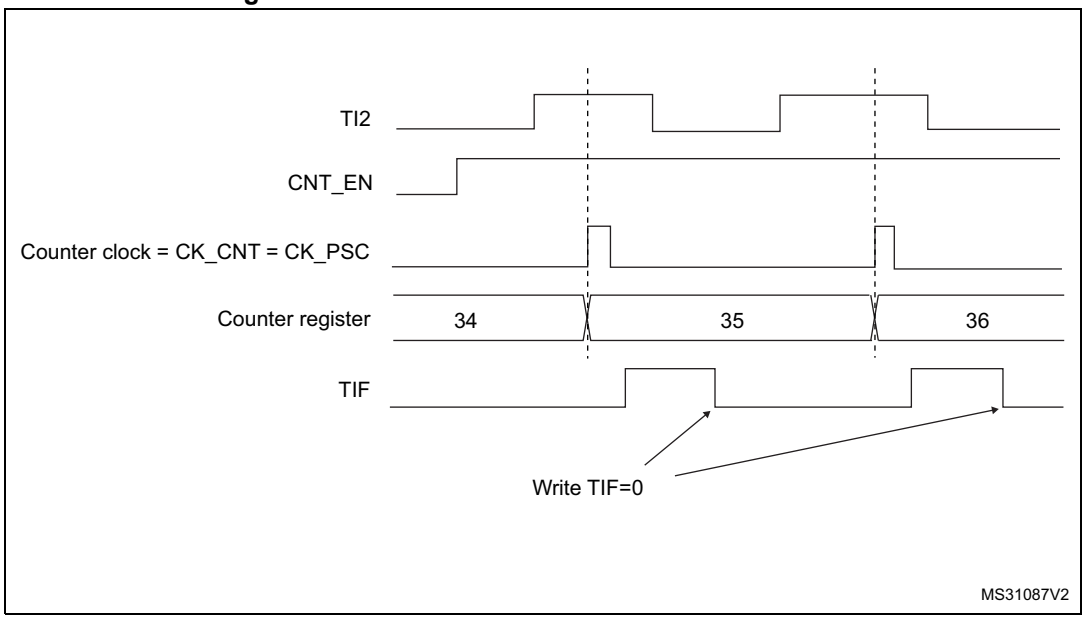

External clock source mode 2

This mode is selected by writing ECE=1 in the TIMx_SMCR register.

The counter can count at each rising or falling edge on the external trigger input ETR.

The *Figure 122* gives an overview of the external trigger input block.

Figure 122. External trigger input block

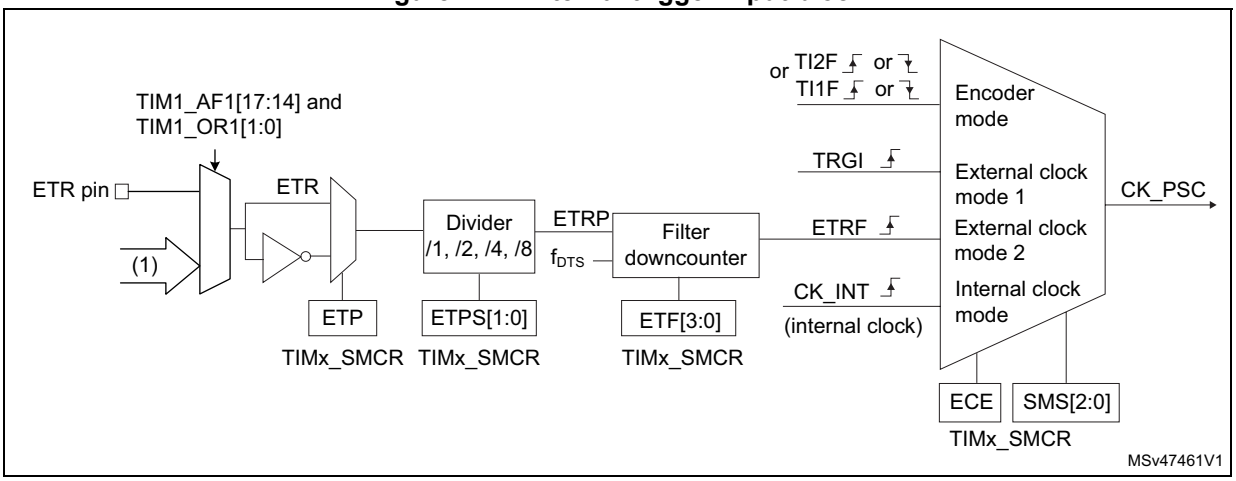

1. Refer to *Figure 118: TIM1 ETR input circuitry*.

For example, to configure the upcounter to count each 2 rising edges on ETR, use the following procedure:

1. As no filter is needed in this example, write ETF[3:0]=0000 in the TIMx_SMCR register.
2. Set the prescaler by writing ETPS[1:0]=01 in the TIMx_SMCR register
3. Select rising edge detection on the ETR pin by writing ETP=0 in the TIMx_SMCR register
4. Enable external clock mode 2 by writing ECE=1 in the TIMx_SMCR register.
5. Enable the counter by writing CEN=1 in the TIMx_CR1 register.

The counter counts once each 2 ETR rising edges.

The delay between the rising edge on ETR and the actual clock of the counter is due to the resynchronization circuit on the ETRP signal. As a consequence, the maximum frequency which can be correctly captured by the counter is at most ¼ of TIMxCLK frequency. When the ETRP signal is faster, the user should apply a division of the external signal by proper ETPS prescaler setting.

Figure 123. Control circuit in external clock mode 2

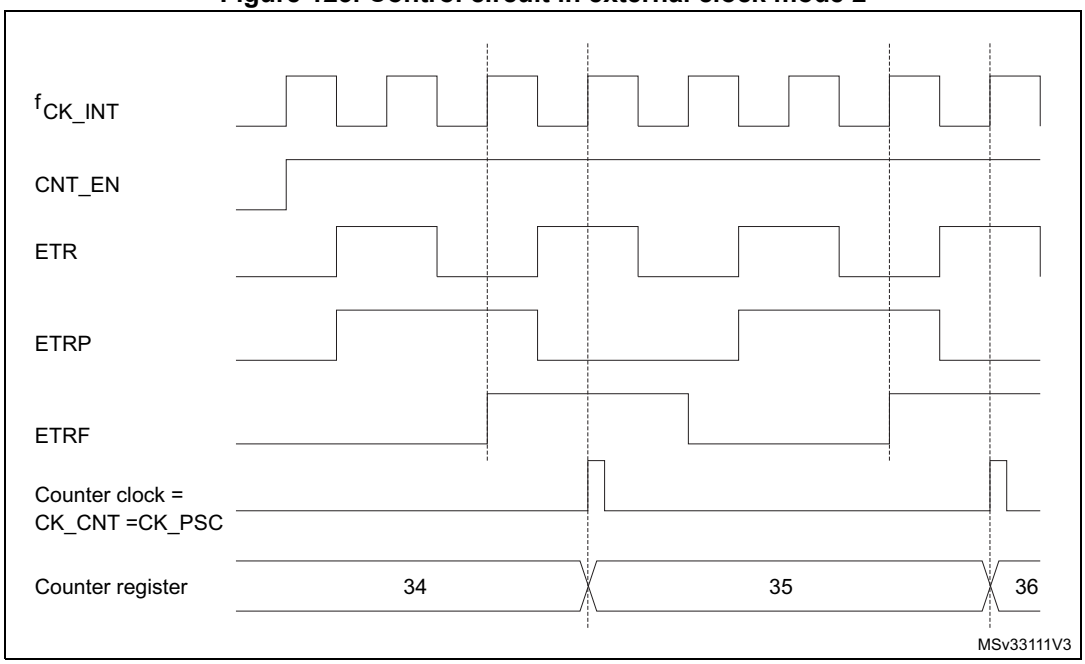

21.3.6 Capture/compare channels

Each Capture/Compare channel is built around a capture/compare register (including a shadow register), an input stage for capture (with digital filter, multiplexing, and prescaler, except for channels 5 and 6) and an output stage (with comparator and output control).

Figure 124 to *Figure 127* give an overview of one Capture/Compare channel.

The input stage samples the corresponding TIx input to generate a filtered signal TIxF. Then, an edge detector with polarity selection generates a signal (TIxFPx) which can be used as trigger input by the slave mode controller or as the capture command. It is prescaled before the capture register (ICxPS).

Figure 124. Capture/compare channel (example: channel 1 input stage)

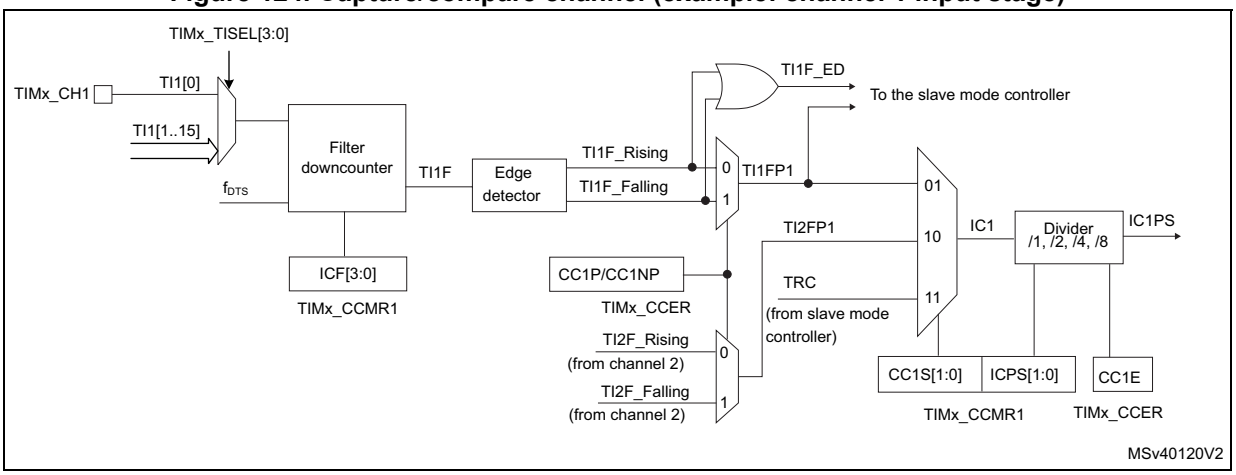

The output stage generates an intermediate waveform which is then used for reference: OCxRef (active high). The polarity acts at the end of the chain.

Figure 125. Capture/compare channel 1 main circuit

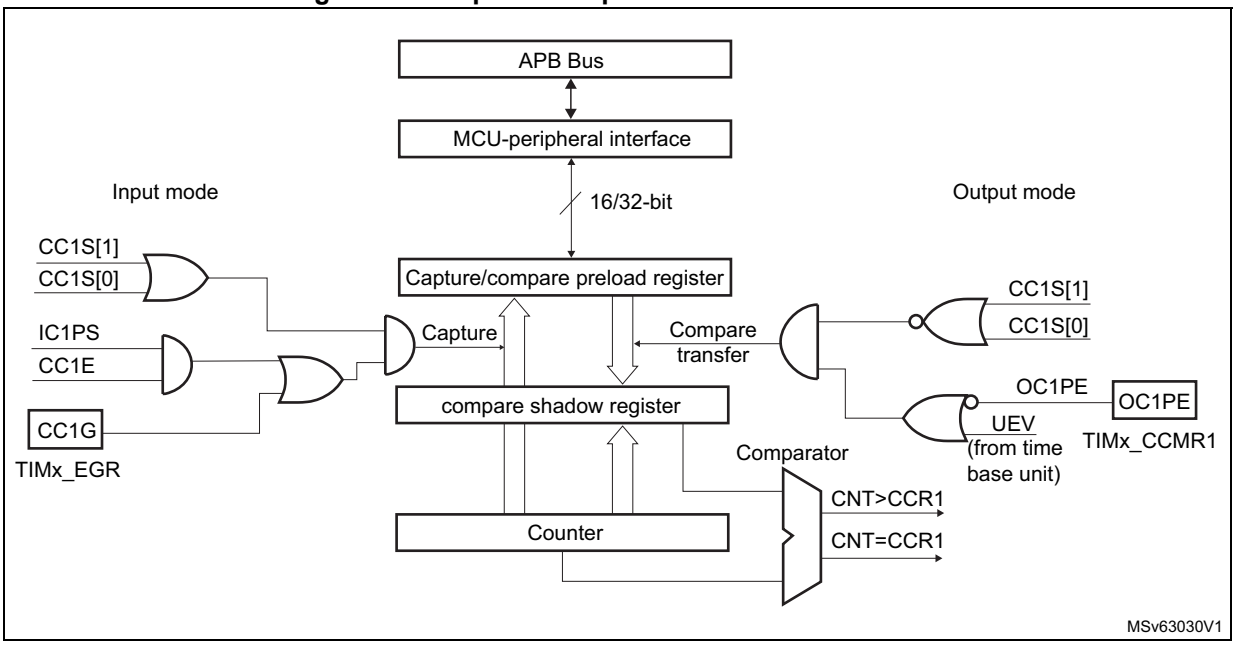

Figure 126. Output stage of capture/compare channel (channel 1, idem ch. 2 and 3)

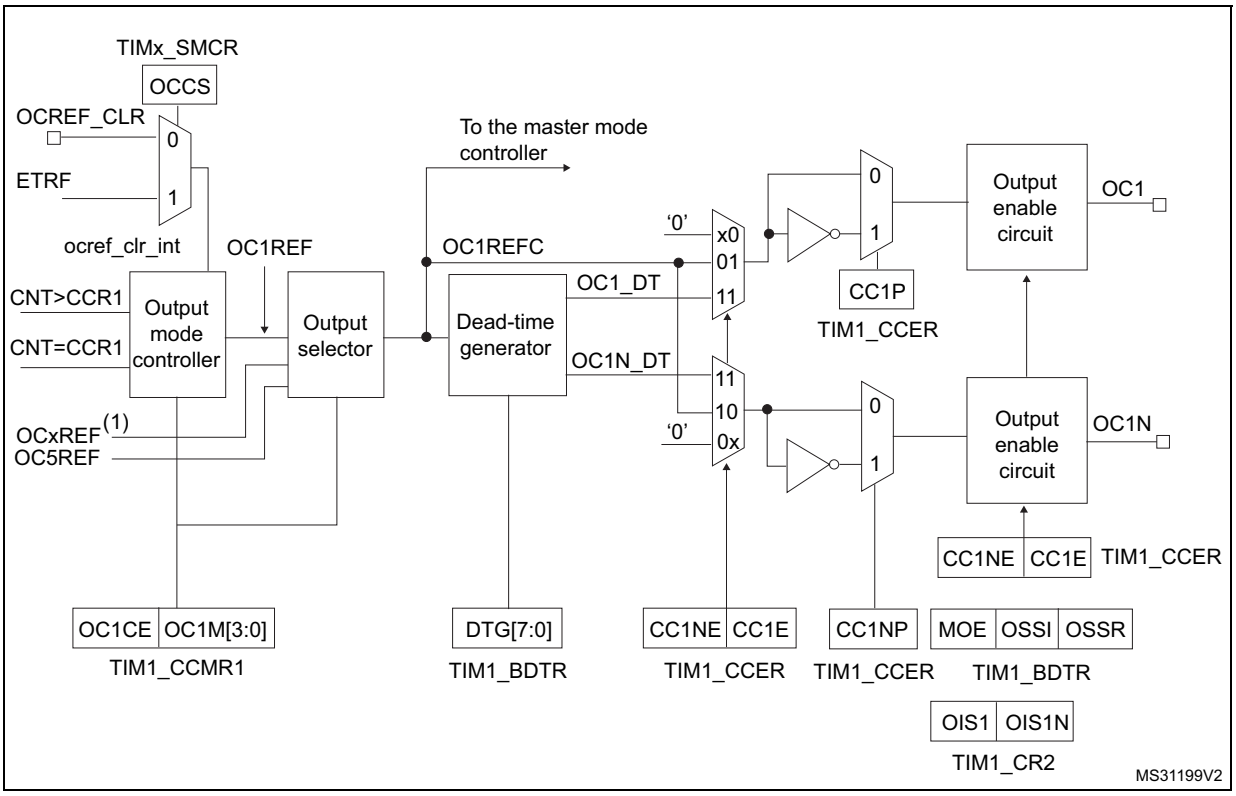

1. OCxREF, where x is the rank of the complementary channel

Figure 127. Output stage of capture/compare channel (channel 4)

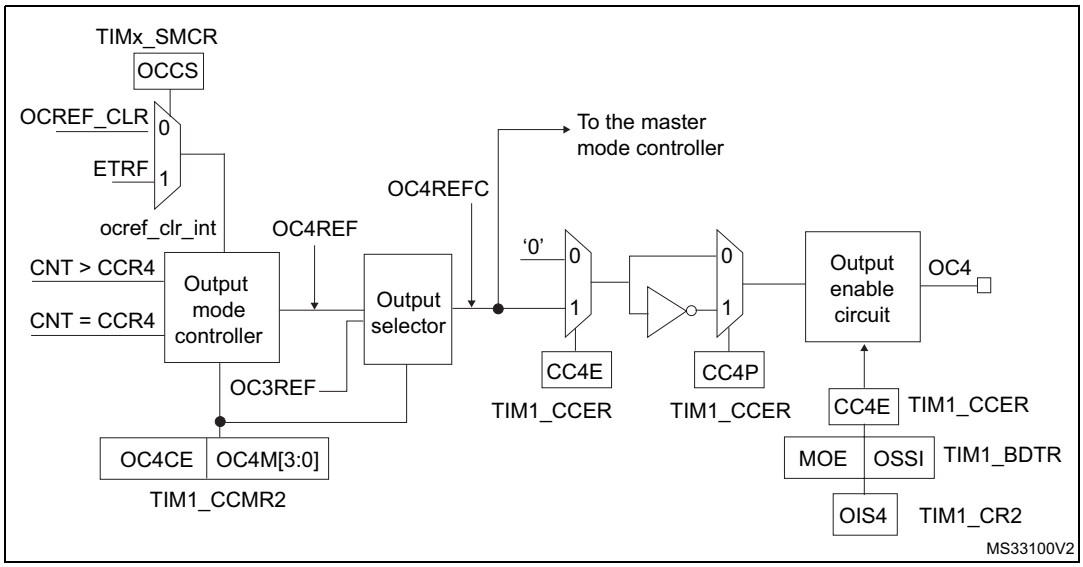

Figure 128. Output stage of capture/compare channel (channel 5, idem ch. 6)

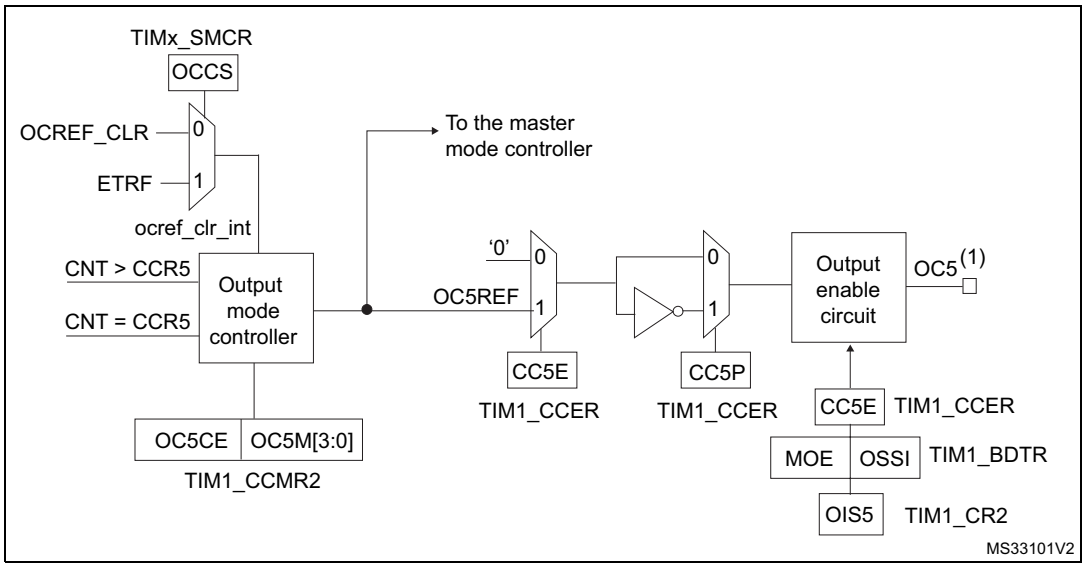

1. Not available externally.

The capture/compare block is made of one preload register and one shadow register. Write and read always access the preload register.

In capture mode, captures are actually done in the shadow register, which is copied into the preload register.

In compare mode, the content of the preload register is copied into the shadow register which is compared to the counter.

21.3.7 Input capture mode

In Input capture mode, the Capture/Compare Registers (TIMx_CCRx) are used to latch the value of the counter after a transition detected by the corresponding ICx signal. When a capture occurs, the corresponding CCXIF flag (TIMx_SR register) is set and an interrupt or a DMA request can be sent if they are enabled. If a capture occurs while the CCxIF flag was already high, then the over-capture flag CCxOF (TIMx_SR register) is set. CCxIF can be cleared by software by writing it to '0' or by reading the captured data stored in the TIMx_CCRx register. CCxOF is cleared when written with '0'.

The following example shows how to capture the counter value in TIMx_CCR1 when TI1 input rises. To do this, use the following procedure:

1. Select the proper TI1x source (internal or external) with the TI1SEL[3:0] bits in the TIMx_TISEL register.
2. Select the active input: TIMx_CCR1 must be linked to the TI1 input, so write the CC1S bits to 01 in the TIMx_CCMR1 register. As soon as CC1S becomes different from 00, the channel is configured in input and the TIMx_CCR1 register becomes read-only.
3. Program the appropriate input filter duration in relation with the signal connected to the timer (when the input is one of the TIx (ICxF bits in the TIMx_CCMRx register). Let's imagine that, when toggling, the input signal is not stable during at must 5 internal clock cycles. We must program a filter duration longer than these 5 clock cycles. We can validate a transition on TI1 when 8 consecutive samples with the new level have been

detected (sampled at f_{DTS} frequency). Then write IC1F bits to 0011 in the TIMx_CCMR1 register.

4. Select the edge of the active transition on the TI1 channel by writing CC1P and CC1NP bits to 0 in the TIMx_CCER register (rising edge in this case).
5. Program the input prescaler. In our example, we wish the capture to be performed at each valid transition, so the prescaler is disabled (write IC1PS bits to '00' in the TIMx_CCMR1 register).
6. Enable capture from the counter into the capture register by setting the CC1E bit in the TIMx_CCER register.
7. If needed, enable the related interrupt request by setting the CC1IE bit in the TIMx_DIER register, and/or the DMA request by setting the CC1DE bit in the TIMx_DIER register.

When an input capture occurs:

- The TIMx_CCR1 register gets the value of the counter on the active transition.
- CC1IF flag is set (interrupt flag). CC1OF is also set if at least two consecutive captures occurred whereas the flag was not cleared.
- An interrupt is generated depending on the CC1IE bit.
- A DMA request is generated depending on the CC1DE bit.

In order to handle the overcapture, it is recommended to read the data before the overcapture flag. This is to avoid missing an overcapture which could happen after reading the flag and before reading the data.

Note: IC interrupt and/or DMA requests can be generated by software by setting the corresponding CCxG bit in the TIMx_EGR register.

21.3.8 PWM input mode

This mode is a particular case of input capture mode. The procedure is the same except:

- Two ICx signals are mapped on the same TIx input.
- These 2 ICx signals are active on edges with opposite polarity.
- One of the two TIxFP signals is selected as trigger input and the slave mode controller is configured in reset mode.

For example, the user can measure the period (in TIMx_CCR1 register) and the duty cycle (in TIMx_CCR2 register) of the PWM applied on TI1 using the following procedure (depending on CK_INT frequency and prescaler value):

1. Select the proper TI1x source (internal or external) with the TI1SEL[3:0] bits in the TIMx_TISEL register.
2. Select the active input for TIMx_CCR1: write the CC1S bits to 01 in the TIMx_CCMR1 register (TI1 selected).
3. Select the active polarity for TI1FP1 (used both for capture in TIMx_CCR1 and counter clear): write the CC1P and CC1NP bits to ‘0’ (active on rising edge).
4. Select the active input for TIMx_CCR2: write the CC2S bits to 10 in the TIMx_CCMR1 register (TI1 selected).
5. Select the active polarity for TI1FP2 (used for capture in TIMx_CCR2): write the CC2P and CC2NP bits to CC2P/CC2NP=’10’ (active on falling edge).
6. Select the valid trigger input: write the TS bits to 00101 in the TIMx_SMCR register (TI1FP1 selected).
7. Configure the slave mode controller in reset mode: write the SMS bits to 0100 in the TIMx_SMCR register.
8. Enable the captures: write the CC1E and CC2E bits to ‘1’ in the TIMx_CCER register.

Figure 129. PWM input mode timing

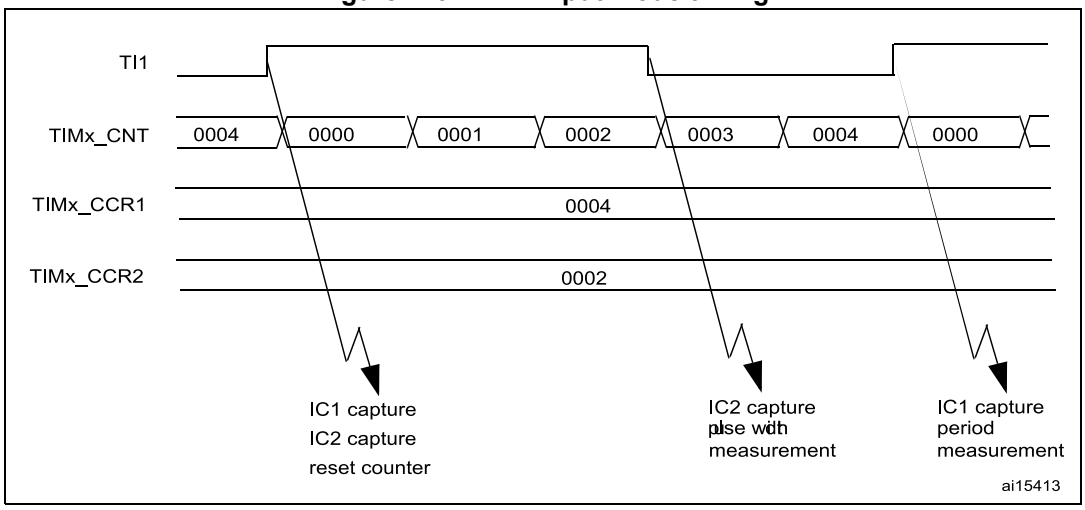

21.3.9 Forced output mode

In output mode (CCxS bits = 00 in the TIMx_CCMRx register), each output compare signal (OCxREF and then OCx/OCxN) can be forced to active or inactive level directly by software, independently of any comparison between the output compare register and the counter.

To force an output compare signal (OCXREF/OCx) to its active level, user just needs to write 0101 in the OCxM bits in the corresponding TIMx_CCMRx register. Thus OCXREF is forced high (OCxREF is always active high) and OCx get opposite value to CCxP polarity bit.

For example: CCxP=0 (OCx active high) => OCx is forced to high level.

The OCxREF signal can be forced low by writing the OCxM bits to 0100 in the TIMx_CCMRx register.

Anyway, the comparison between the TIMx_CCRx shadow register and the counter is still performed and allows the flag to be set. Interrupt and DMA requests can be sent accordingly. This is described in the output compare mode section below.

21.3.10 Output compare mode

This function is used to control an output waveform or indicate when a period of time has elapsed. Channels 1 to 4 can be output, while Channel 5 and 6 are only available inside the device (for instance, for compound waveform generation or for ADC triggering).

When a match is found between the capture/compare register and the counter, the output compare function:

- Assigns the corresponding output pin to a programmable value defined by the output compare mode (OCxM bits in the TIMx_CCMRx register) and the output polarity (CCxP bit in the TIMx_CCER register). The output pin can keep its level (OCXM=0000), be set active (OCxM=0001), be set inactive (OCxM=0010) or can toggle (OCxM=0011) on match.
- Sets a flag in the interrupt status register (CCxIF bit in the TIMx_SR register).
- Generates an interrupt if the corresponding interrupt mask is set (CCXIE bit in the TIMx_DIER register).
- Sends a DMA request if the corresponding enable bit is set (CCxDE bit in the TIMx_DIER register, CCDS bit in the TIMx_CR2 register for the DMA request selection).

The TIMx_CCRx registers can be programmed with or without preload registers using the OCxPE bit in the TIMx_CCMRx register.

In output compare mode, the update event UEV has no effect on OCxREF and OCx output. The timing resolution is one count of the counter. Output compare mode can also be used to output a single pulse (in One Pulse mode).

Procedure

1. Select the counter clock (internal, external, prescaler).
2. Write the desired data in the TIMx_ARR and TIMx_CCRx registers.
3. Set the CCxIE bit if an interrupt request is to be generated.
4. Select the output mode. For example:
   - Write OCxM = 0011 to toggle OCx output pin when CNT matches CCRx
   - Write OCxPE = 0 to disable preload register
   - Write CCxP = 0 to select active high polarity
   - Write CCxE = 1 to enable the output
5. Enable the counter by setting the CEN bit in the TIMx_CR1 register.

The TIMx_CCRx register can be updated at any time by software to control the output waveform, provided that the preload register is not enabled (OCxPE='0', else TIMx_CCRx shadow register is updated only at the next update event UEV). An example is given in *Figure 130*.

Figure 130. Output compare mode, toggle on OC1

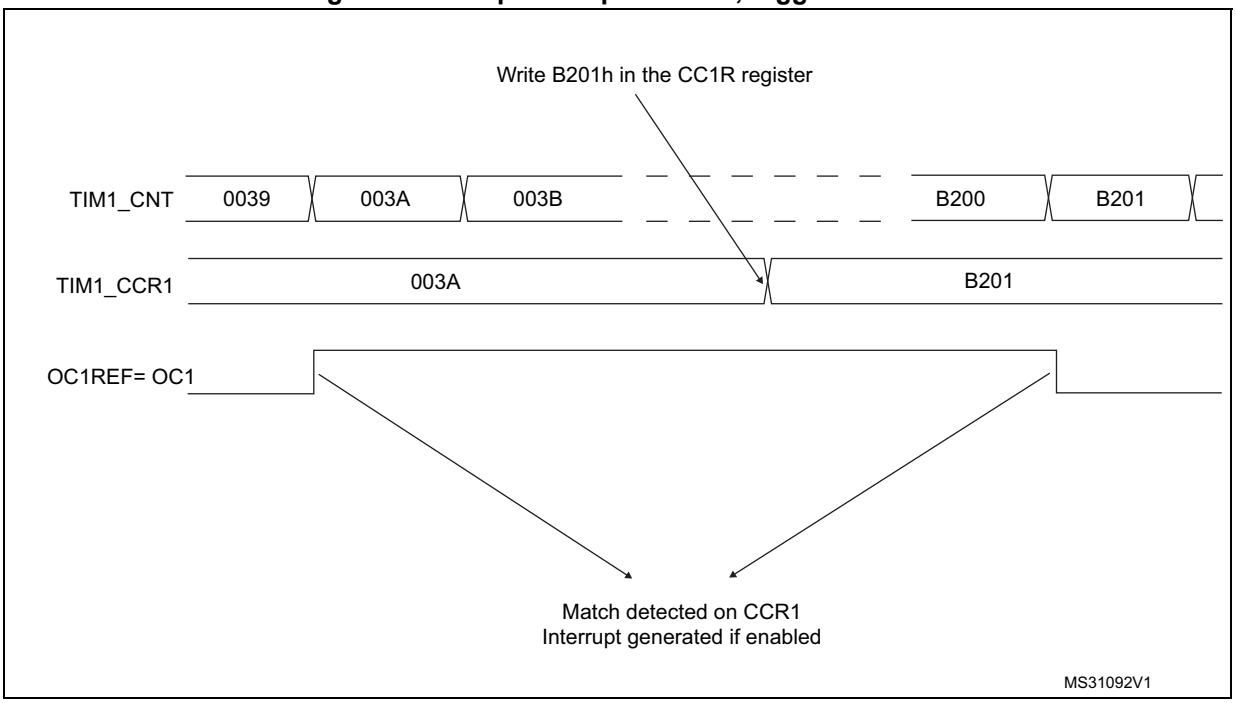

21.3.11 PWM mode

Pulse Width Modulation mode allows a signal to be generated with a frequency determined by the value of the TIMx_ARR register and a duty cycle determined by the value of the TIMx_CCRx register.

The PWM mode can be selected independently on each channel (one PWM per OCx output) by writing ‘0110’ (PWM mode 1) or ‘0111’ (PWM mode 2) in the OCxM bits in the TIMx_CCMRx register. The corresponding preload register must be enabled by setting the OCxPE bit in the TIMx_CCMRx register, and eventually the auto-reload preload register (in upcounting or center-aligned modes) by setting the ARPE bit in the TIMx_CR1 register.

As the preload registers are transferred to the shadow registers only when an update event occurs, before starting the counter, all registers must be initialized by setting the UG bit in the TIMx_EGR register.

OCx polarity is software programmable using the CCxP bit in the TIMx_CCER register. It can be programmed as active high or active low. OCx output is enabled by a combination of the CCxE, CCxNE, MOE, OSSI and OSSR bits (TIMx_CCER and TIMx_BDTR registers). Refer to the TIMx_CCER register description for more details.

In PWM mode (1 or 2), TIMx_CNT and TIMx_CCRx are always compared to determine whether TIMx_CCRx ≤ TIMx_CNT or TIMx_CNT ≤ TIMx_CCRx (depending on the direction of the counter).

The timer is able to generate PWM in edge-aligned mode or center-aligned mode depending on the CMS bits in the TIMx_CR1 register.

PWM edge-aligned mode

- Upcounting configuration

  Upcounting is active when the DIR bit in the TIMx_CR1 register is low. Refer to the *Upcounting mode on page 526*.

  In the following example, we consider PWM mode 1. The reference PWM signal OCxREF is high as long as TIMx_CNT < TIMx_CCRx else it becomes low. If the compare value in TIMx_CCRx is greater than the auto-reload value (in TIMx_ARR) then OCxREF is held at ‘1’. If the compare value is 0 then OCxRef is held at ‘0’. *Figure 131* shows some edge-aligned PWM waveforms in an example where TIMx_ARR=8.

Figure 131. Edge-aligned PWM waveforms (ARR=8)

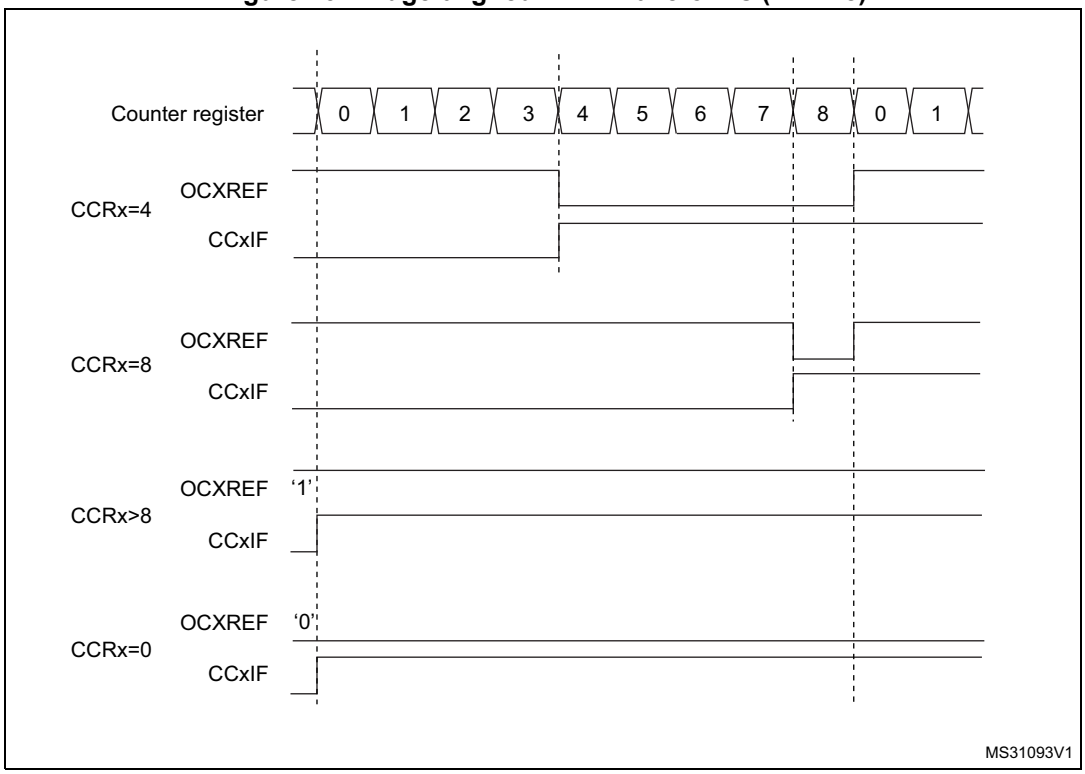

- Downcounting configuration

  Downcounting is active when DIR bit in TIMx_CR1 register is high. Refer to the *Downcounting mode on page 530*

  In PWM mode 1, the reference signal OCxRef is low as long as TIMx_CNT > TIMx_CCRx else it becomes high. If the compare value in TIMx_CCRx is greater than the auto-reload value in TIMx_ARR, then OCxREF is held at ‘1’. 0% PWM is not possible in this mode.

PWM center-aligned mode

Center-aligned mode is active when the CMS bits in TIMx_CR1 register are different from ‘00’ (all the remaining configurations having the same effect on the OCxRef/OCx signals). The compare flag is set when the counter counts up, when it counts down or both when it counts up and down depending on the CMS bits configuration. The direction bit (DIR) in the

TIMx_CR1 register is updated by hardware and must not be changed by software. Refer to the *Center-aligned mode (up/down counting) on page 533*.

Figure 132 shows some center-aligned PWM waveforms in an example where:

- TIMx_ARR=8,
- PWM mode is the PWM mode 1,
- The flag is set when the counter counts down corresponding to the center-aligned mode 1 selected for CMS=01 in TIMx_CR1 register.

Figure 132. Center-aligned PWM waveforms (ARR=8)

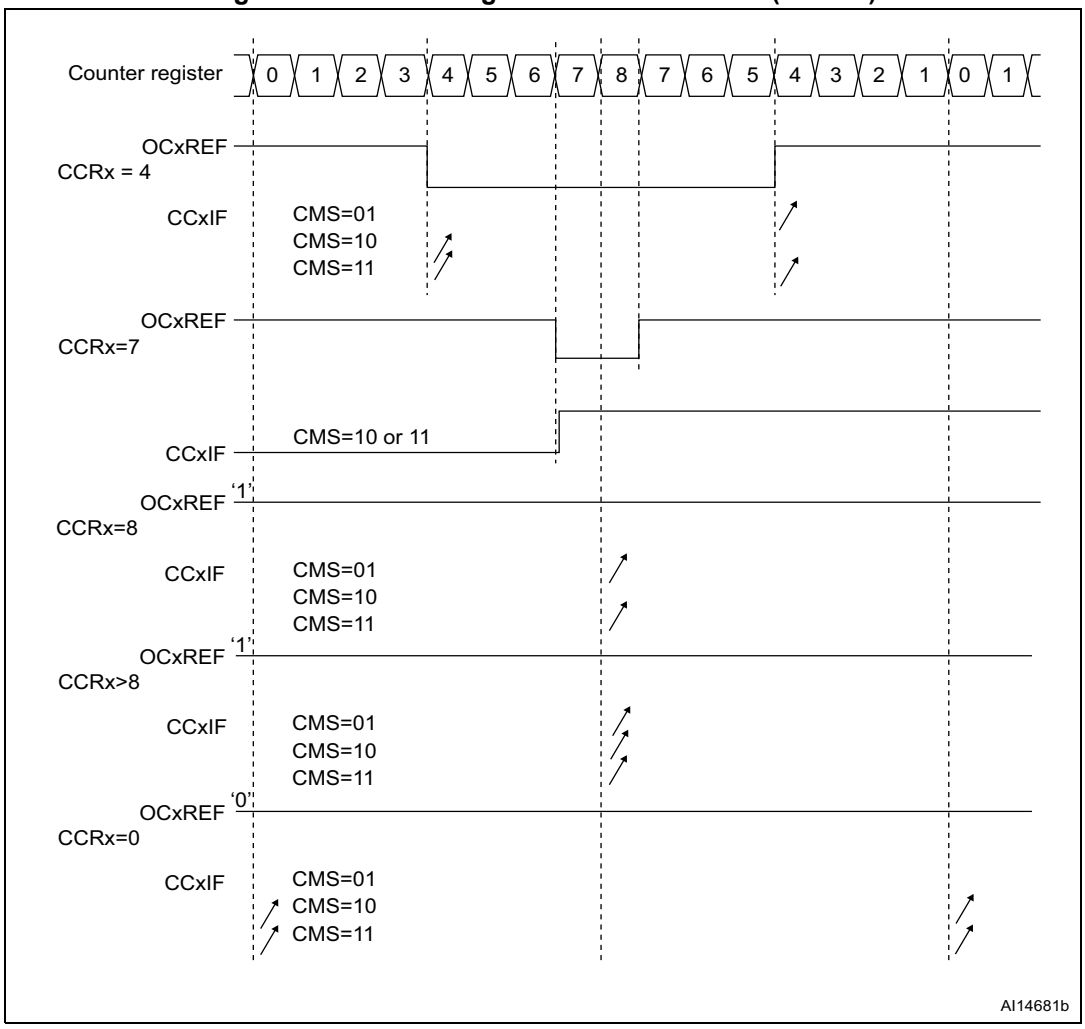

Hints on using center-aligned mode

- When starting in center-aligned mode, the current up-down configuration is used. It means that the counter counts up or down depending on the value written in the DIR bit

in the TIMx_CR1 register. Moreover, the DIR and CMS bits must not be changed at the same time by the software.

- Writing to the counter while running in center-aligned mode is not recommended as it can lead to unexpected results. In particular:
  - The direction is not updated if a value greater than the auto-reload value is written in the counter (TIMx_CNT>TIMx_ARR). For example, if the counter was counting up, it continues to count up.
  - The direction is updated if 0 or the TIMx_ARR value is written in the counter but no Update Event UEV is generated.
- The safest way to use center-aligned mode is to generate an update by software (setting the UG bit in the TIMx_EGR register) just before starting the counter and not to write the counter while it is running.

21.3.12 Asymmetric PWM mode

Asymmetric mode allows two center-aligned PWM signals to be generated with a programmable phase shift. While the frequency is determined by the value of the TIMx_ARR register, the duty cycle and the phase-shift are determined by a pair of TIMx_CCRx register. One register controls the PWM during up-counting, the second during down counting, so that PWM is adjusted every half PWM cycle:

- OC1REFC (or OC2REFC) is controlled by TIMx_CCR1 and TIMx_CCR2
- OC3REFC (or OC4REFC) is controlled by TIMx_CCR3 and TIMx_CCR4

Asymmetric PWM mode can be selected independently on two channel (one OCx output per pair of CCR registers) by writing ‘1110’ (Asymmetric PWM mode 1) or ‘1111’ (Asymmetric PWM mode 2) in the OCxM bits in the TIMx_CCMRx register.

Note: The OCxM[3:0] bit field is split into two parts for compatibility reasons, the most significant bit is not contiguous with the 3 least significant ones.

When a given channel is used as asymmetric PWM channel, its complementary channel can also be used. For instance, if an OC1REFC signal is generated on channel 1 (Asymmetric PWM mode 1), it is possible to output either the OC2REF signal on channel 2, or an OC2REFC signal resulting from asymmetric PWM mode 1.

Figure 133 represents an example of signals that can be generated using Asymmetric PWM mode (channels 1 to 4 are configured in Asymmetric PWM mode 1). Together with the deadtime generator, this allows a full-bridge phase-shifted DC to DC converter to be controlled.

Figure 133. Generation of 2 phase-shifted PWM signals with 50% duty cycle

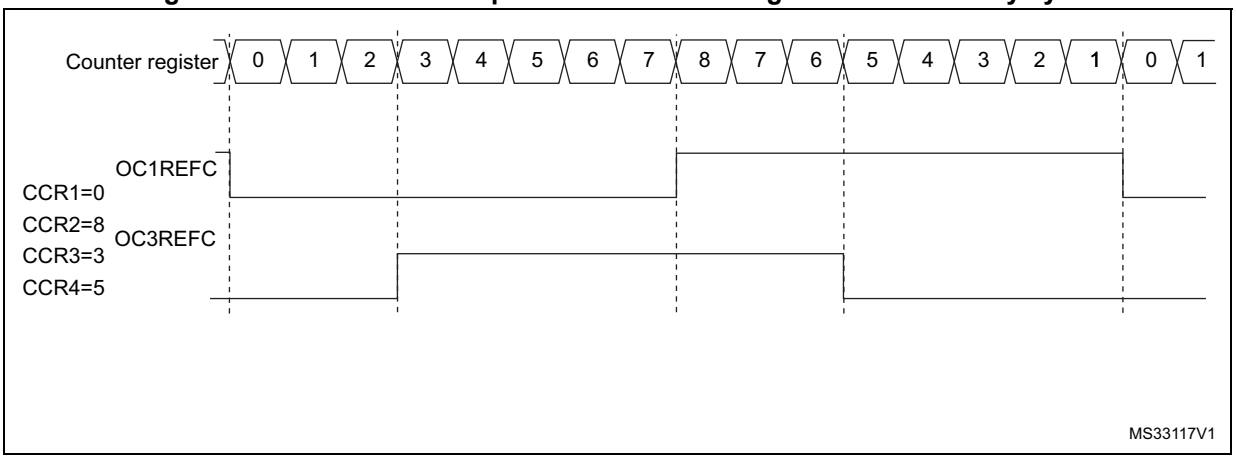

21.3.13 Combined PWM mode

Combined PWM mode allows two edge or center-aligned PWM signals to be generated with programmable delay and phase shift between respective pulses. While the frequency is determined by the value of the TIMx_ARR register, the duty cycle and delay are determined by the two TIMx_CCRx registers. The resulting signals, OCxREFC, are made of an OR or AND logical combination of two reference PWMs:

- OC1REFC (or OC2REFC) is controlled by TIMx_CCR1 and TIMx_CCR2
- OC3REFC (or OC4REFC) is controlled by TIMx_CCR3 and TIMx_CCR4

Combined PWM mode can be selected independently on two channels (one OCx output per pair of CCR registers) by writing ‘1100’ (Combined PWM mode 1) or ‘1101’ (Combined PWM mode 2) in the OCxM bits in the TIMx_CCMRx register.

When a given channel is used as combined PWM channel, its complementary channel must be configured in the opposite PWM mode (for instance, one in Combined PWM mode 1 and the other in Combined PWM mode 2).

Note: The OCxM[3:0] bit field is split into two parts for compatibility reasons, the most significant bit is not contiguous with the 3 least significant ones.

Figure 134 represents an example of signals that can be generated using Asymmetric PWM mode, obtained with the following configuration:

- Channel 1 is configured in Combined PWM mode 2,
- Channel 2 is configured in PWM mode 1,
- Channel 3 is configured in Combined PWM mode 2,
- Channel 4 is configured in PWM mode 1.

Figure 134. Combined PWM mode on channel 1 and 3

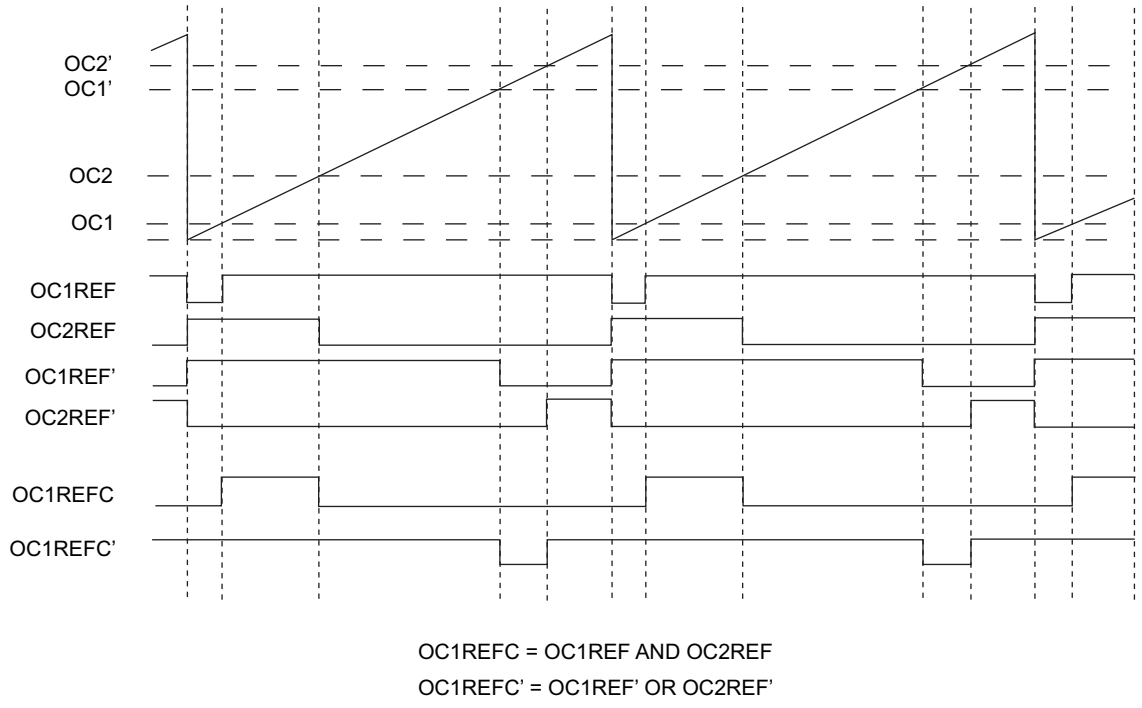

21.3.14 Combined 3-phase PWM mode

Combined 3-phase PWM mode allows one to three center-aligned PWM signals to be generated with a single programmable signal ANDed in the middle of the pulses. The OC5REF signal is used to define the resulting combined signal. The 3-bits GC5C[3:1] in the TIMx_CCR5 allow selection on which reference signal the OC5REF is combined. The resulting signals, OCxREFC, are made of an AND logical combination of two reference PWMs:

- If GC5C1 is set, OC1REFC is controlled by TIMx_CCR1 and TIMx_CCR5
- If GC5C2 is set, OC2REFC is controlled by TIMx_CCR2 and TIMx_CCR5
- If GC5C3 is set, OC3REFC is controlled by TIMx_CCR3 and TIMx_CCR5

Combined 3-phase PWM mode can be selected independently on channels 1 to 3 by setting at least one of the 3-bits GC5C[3:1].

Figure 135. 3-phase combined PWM signals with multiple trigger pulses per period

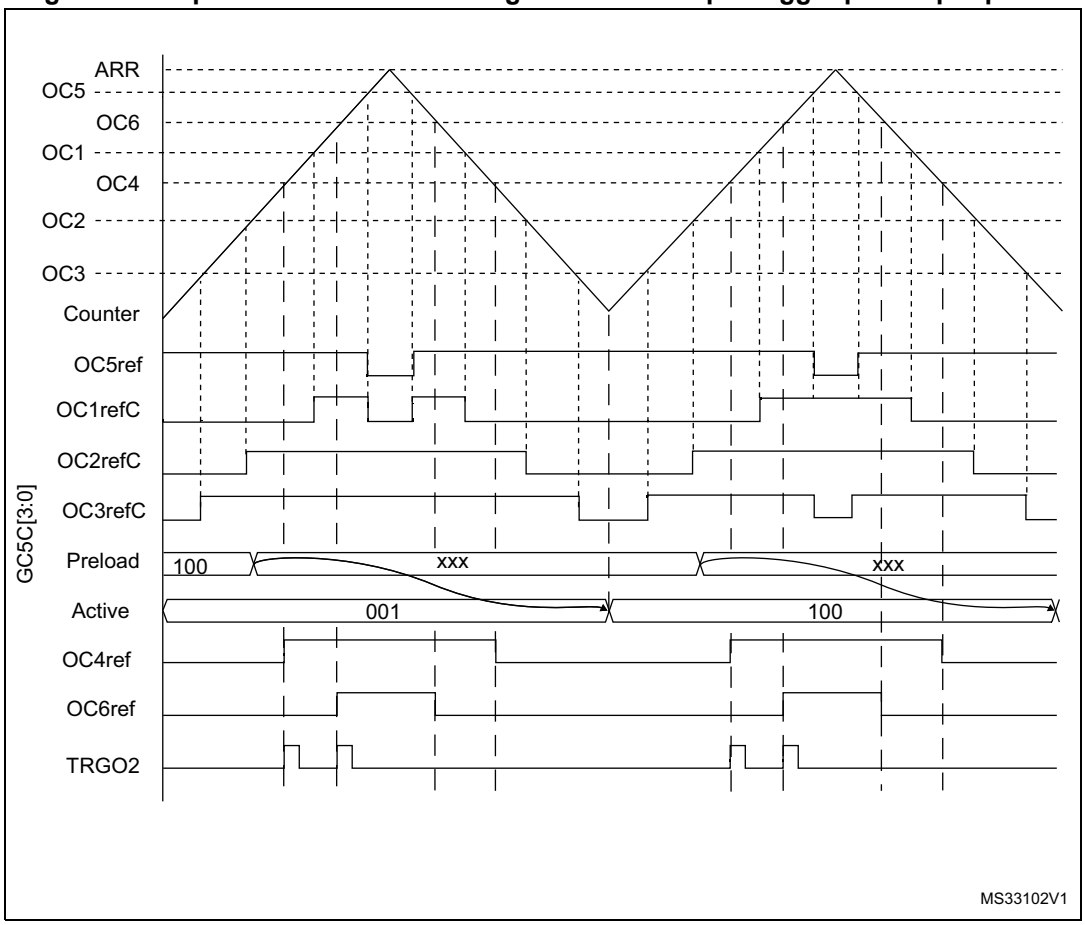

The TRGO2 waveform shows how the ADC can be synchronized on given 3-phase PWM signals. Refer to *Section 21.3.27: ADC synchronization* for more details.

21.3.15 Complementary outputs and dead-time insertion

The advanced-control timers (TIM1) can output two complementary signals and manage the switching-off and the switching-on instants of the outputs.

This time is generally known as dead-time and it has to be adjusted depending on the devices that are connected to the outputs and their characteristics (intrinsic delays of level-shifters, delays due to power switches...)

The polarity of the outputs (main output OCx or complementary OCxN) can be selected independently for each output. This is done by writing to the CCxP and CCxNP bits in the TIMx_CCER register.

The complementary signals OCx and OCxN are activated by a combination of several control bits: the CCxE and CCxNE bits in the TIMx_CCER register and the MOE, OISx, OISxN, OSSI and OSSR bits in the TIMx_BDTR and TIMx_CR2 registers. Refer to *Table 137: Output control bits for complementary OCx and OCxN channels with break feature on page 602* for more details. In particular, the dead-time is activated when switching to the idle state (MOE falling down to 0).

Dead-time insertion is enabled by setting both CCxE and CCxNE bits, and the MOE bit if the break circuit is present. There is one 10-bit dead-time generator for each channel. From a reference waveform OCxREF, it generates 2 outputs OCx and OCxN. If OCx and OCxN are active high:

- The OCx output signal is the same as the reference signal except for the rising edge, which is delayed relative to the reference rising edge.
- The OCxN output signal is the opposite of the reference signal except for the rising edge, which is delayed relative to the reference falling edge.

If the delay is greater than the width of the active output (OCx or OCxN) then the corresponding pulse is not generated.

The following figures show the relationships between the output signals of the dead-time generator and the reference signal OCxREF. (we suppose CCxP=0, CCxNP=0, MOE=1, CCxE=1 and CCxNE=1 in these examples)

Figure 136. Complementary output with dead-time insertion

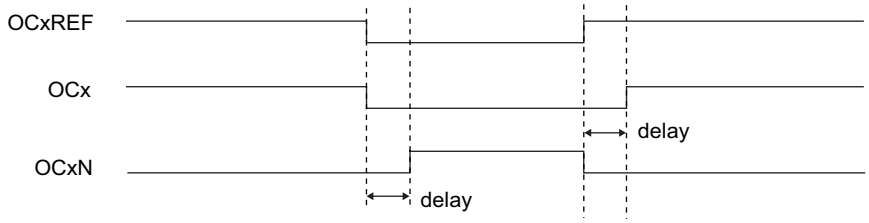

Figure 137. Dead-time waveforms with delay greater than the negative pulse

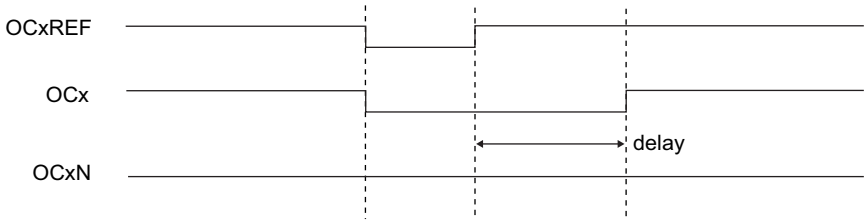

Figure 138. Dead-time waveforms with delay greater than the positive pulse

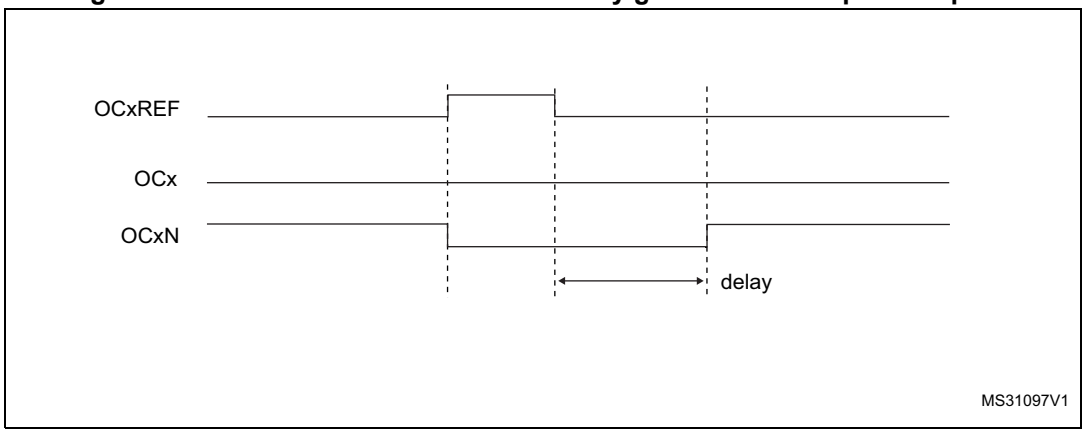

The dead-time delay is the same for each of the channels and is programmable with the DTG bits in the TIMx_BDTR register. Refer to *Section 21.4.20: TIM1 break and dead-time register (TIM1_BDTR)* for delay calculation.

Re-directing OCxREF to OCx or OCxN

In output mode (forced, output compare or PWM), OCxREF can be re-directed to the OCx output or to OCxN output by configuring the CCxE and CCxNE bits in the TIMx_CCER register.

This allows a specific waveform to be sent (such as PWM or static active level) on one output while the complementary remains at its inactive level. Other alternative possibilities are to have both outputs at inactive level or both outputs active and complementary with dead-time.

Note: When only OCxN is enabled (CCxE=0, CCxNE=1), it is not complemented and becomes active as soon as OCxREF is high. For example, if CCxNP=0 then OCxN=OCxRef. On the other hand, when both OCx and OCxN are enabled (CCxE=CCxNE=1) OCx becomes active when OCxREF is high whereas OCxN is complemented and becomes active when OCxREF is low.

21.3.16 Using the break function

The purpose of the break function is to protect power switches driven by PWM signals generated with the TIM1 timer. The two break inputs are usually connected to fault outputs of power stages and 3-phase inverters. When activated, the break circuitry shuts down the PWM outputs and forces them to a predefined safe state. A number of internal MCU events can also be selected to trigger an output shut-down.

The break features two channels. A break channel which gathers both system-level fault (clock failure, parity error,...) and application fault (from input pins and built-in comparator), and can force the outputs to a predefined level (either active or inactive) after a deadtime duration. A break2 channel which only includes application faults and is able to force the outputs to an inactive state.

The output enable signal and output levels during break are depending on several control bits:

- the MOE bit in TIMx_BDTR register allows the outputs to be enabled/disabled by software and is reset in case of break or break2 event.
- the OSSI bit in the TIMx_BDTR register defines whether the timer controls the output in inactive state or releases the control to the GPIO controller (typically to have it in Hi-Z mode)
- the OISx and OISxN bits in the TIMx_CR2 register which are setting the output shut-down level, either active or inactive. The OCx and OCxN outputs cannot be set both to active level at a given time, whatever the OISx and OISxN values. Refer to *Table 137: Output control bits for complementary OCx and OCxN channels with break feature on page 602* for more details.

When exiting from reset, the break circuit is disabled and the MOE bit is low. The break functions can be enabled by setting the BKE and BK2E bits in the TIMx_BDTR register. The break input polarities can be selected by configuring the BKP and BK2P bits in the same register. BKE/BK2E and BKP/BK2P can be modified at the same time. When the BKE/BK2E and BKP/BK2P bits are written, a delay of 1 APB clock cycle is applied before the writing is effective. Consequently, it is necessary to wait 1 APB clock period to correctly read back the bit after the write operation.

Because MOE falling edge can be asynchronous, a resynchronization circuit has been inserted between the actual signal (acting on the outputs) and the synchronous control bit (accessed in the TIMx_BDTR register). It results in some delays between the asynchronous and the synchronous signals. In particular, if MOE is set to 1 whereas it was low, a delay must be inserted (dummy instruction) before reading it correctly. This is because the write acts on the asynchronous signal whereas the read reflects the synchronous signal.

The break can be generated from multiple sources which can be individually enabled and with programmable edge sensitivity, using the TIMx_AF1 and TIMx_AF2 registers.

The sources for break (BRK) channel are:

- An external source connected to one of the BKIN pin (as per selection done in the SYSCFG_CFGR2 register), with polarity selection and optional digital filtering
- An internal source:
  - the CPU1 Cortex®-M4 LOCKUP output
  - the PVD output
  - the SRAM parity error signal
  - a flash memory ECC double error detection
  - a clock failure event generated by the CSS detector
  - the output from a comparator, with polarity selection and optional digital filtering

The sources for break2 (BRK2) are:

- An external source connected to one of the BKIN pin (as per selection done in the SYSCFG_CFGR2 register), with polarity selection and optional digital filtering
- An internal source coming from a comparator output.

Break events can also be generated by software using BG and B2G bits in the TIMx_EGR register. The software break generation using BG and B2G is active whatever the BKE and BK2E enable bits values.

All sources are ORed before entering the timer BRK or BRK2 inputs, as per *Figure 139* below.

Figure 139. Break and Break2 circuitry overview

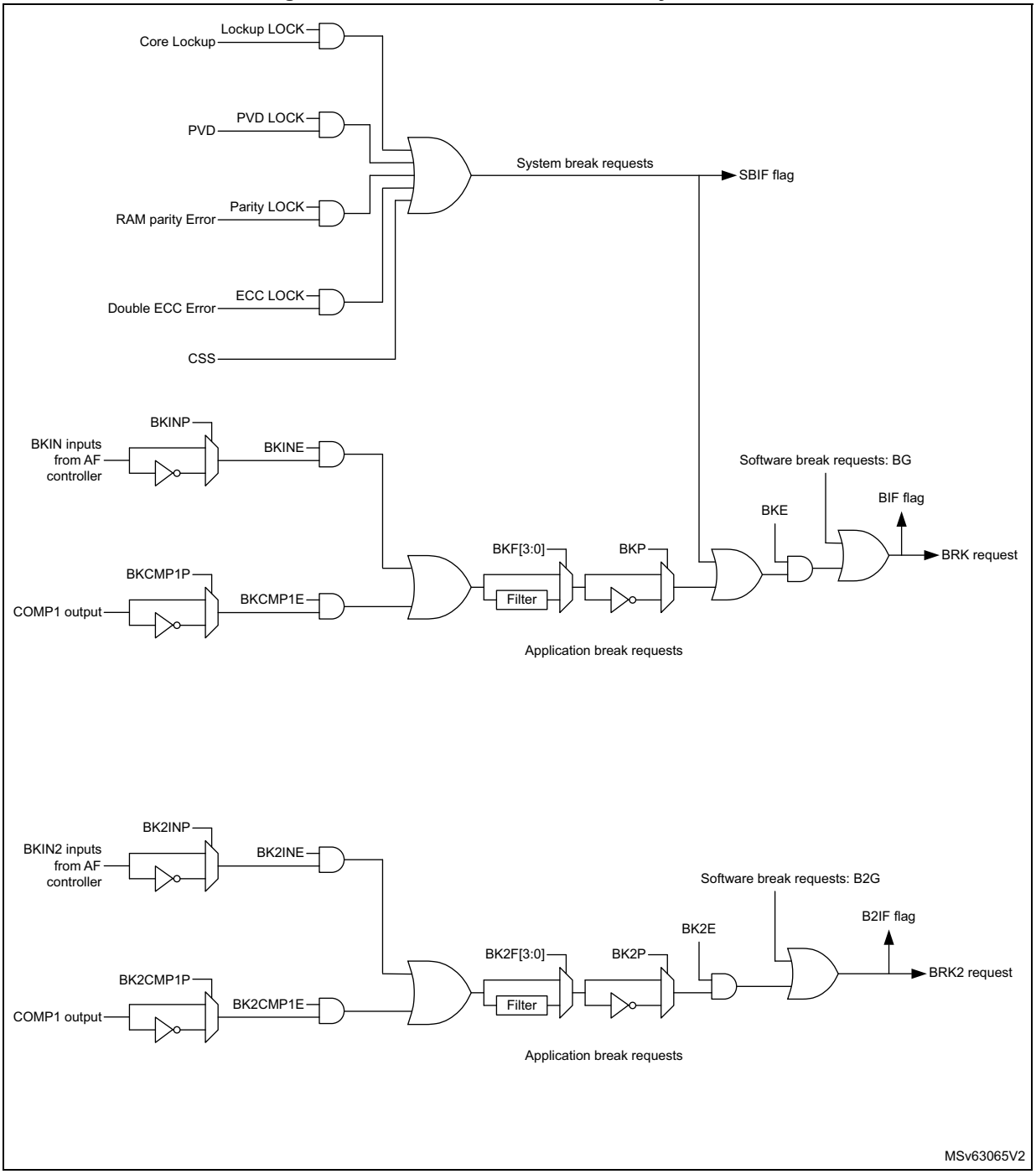

Note: An asynchronous (clockless) operation is only guaranteed when the programmable filter is disabled. If it is enabled, a fail safe clock mode (for example by using the internal PLL and/or the CSS) must be used to guarantee that break events are handled.

When one of the breaks occurs (selected level on one of the break inputs):

- The MOE bit is cleared asynchronously, putting the outputs in inactive state, idle state or even releasing the control to the GPIO controller (selected by the OSSI bit). This feature is enabled even if the MCU oscillator is off.
- Each output channel is driven with the level programmed in the OISx bit in the TIMx_CR2 register as soon as MOE=0. If OSSI=0, the timer releases the output control (taken over by the GPIO controller), otherwise the enable output remains high.
- When complementary outputs are used:
  - The outputs are first put in inactive state (depending on the polarity). This is done asynchronously so that it works even if no clock is provided to the timer.
  - If the timer clock is still present, then the dead-time generator is reactivated in order to drive the outputs with the level programmed in the OISx and OISxN bits after a dead-time. Even in this case, OCx and OCxN cannot be driven to their active level together. Note that because of the resynchronization on MOE, the dead-time duration is slightly longer than usual (around 2 ck_tim clock cycles).
  - If OSSI=0, the timer releases the output control (taken over by the GPIO controller which forces a Hi-Z state), otherwise the enable outputs remain or become high as soon as one of the CCxE or CCxNE bits is high.
- The break status flag (SBIF, BIF and B2IF bits in the TIMx_SR register) is set. An interrupt is generated if the BIE bit in the TIMx_DIER register is set.
- If the AOE bit in the TIMx_BDTR register is set, the MOE bit is automatically set again at the next update event (UEV). As an example, this can be used to perform a regulation. Otherwise, MOE remains low until the application sets it to ‘1’ again. In this case, it can be used for security and the break input can be connected to an alarm from power drivers, thermal sensors or any security components.

Note: If the MOE is reset by the CPU while the AOE bit is set, the outputs are in idle state and forced to inactive level or Hi-Z depending on OSSI value.
If both the MOE and AOE bits are reset by the CPU, the outputs are in disabled state and driven with the level programmed in the OISx bit in the TIMx_CR2 register.

Note: The break inputs are active on level. Thus, the MOE cannot be set while the break input is active (neither automatically nor by software). In the meantime, the status flag BIF and B2IF cannot be cleared.

In addition to the break input and the output management, a write protection has been implemented inside the break circuit to safeguard the application. It allows the configuration of several parameters to be freezed (dead-time duration, OCx/OCxN polarities and state when disabled, OCxM configurations, break enable and polarity). The application can choose from 3 levels of protection selected by the LOCK bits in the TIMx_BDTR register. Refer to *Section 21.4.20: TIM1 break and dead-time register (TIM1_BDTR)*. The LOCK bits can be written only once after an MCU reset.

Figure 140 shows an example of behavior of the outputs in response to a break.

Figure 140. Various output behavior in response to a break event on BRK (OSSI = 1)

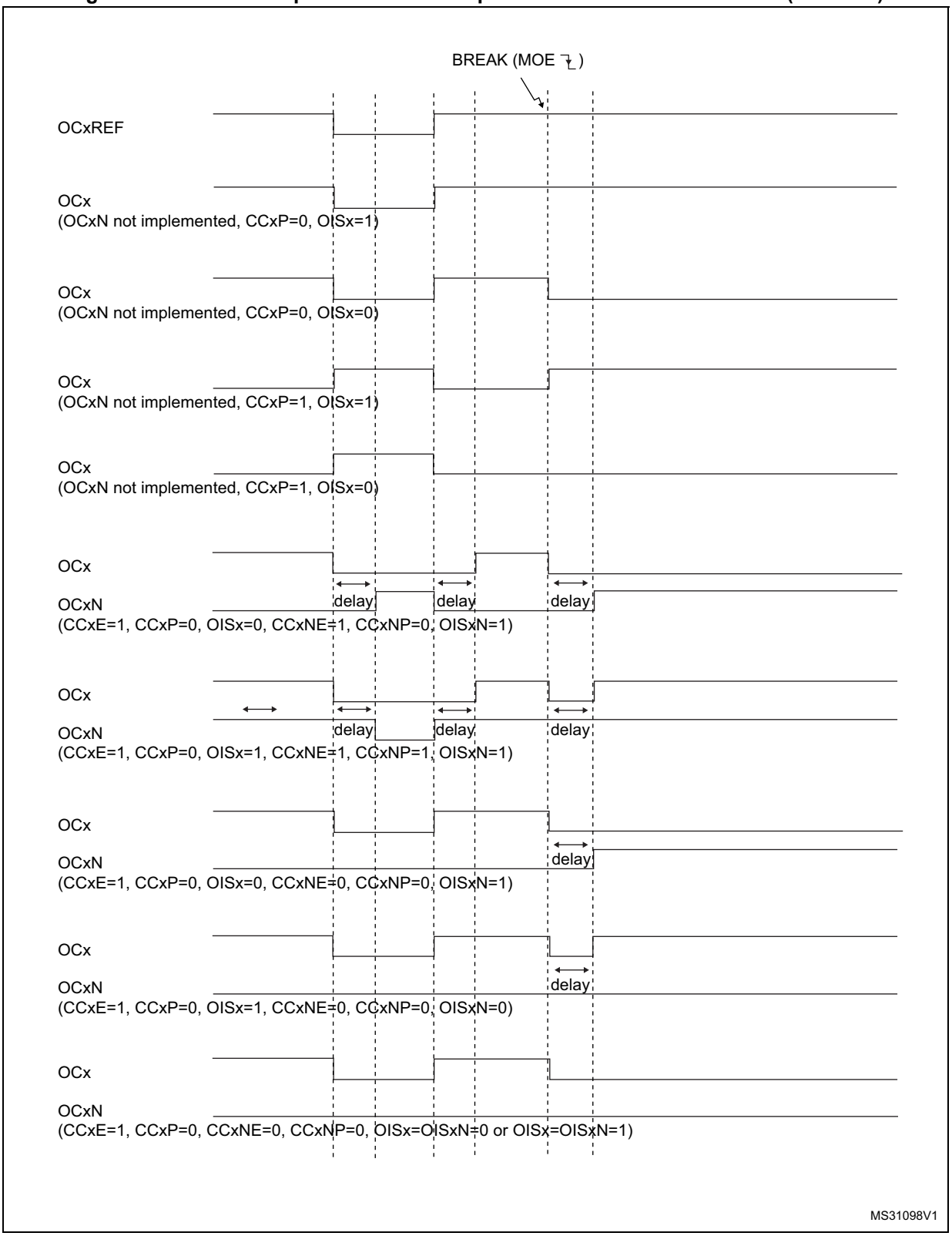

The two break inputs have different behaviors on timer outputs:

- The BRK input can either disable (inactive state) or force the PWM outputs to a predefined safe state.
- BRK2 can only disable (inactive state) the PWM outputs.

The BRK has a higher priority than BRK2 input, as described in *Table 133*.

Note: BRK2 must only be used with OSSR = OSSI = 1.

Table 133. Behavior of timer outputs versus BRK/BRK2 inputs

BRK	BRK2	Timer outputs state	Typical use case	
			OCxN output (low side switches)	OCx output (high side switches)
Active	X	– Inactive then forced output state (after a deadtime) – Outputs disabled if OSSI = 0 (control taken over by GPIO logic)	ON after deadtime insertion	OFF
Inactive	Active	Inactive	OFF	OFF

Figure 141 gives an example of OCx and OCxN output behavior in case of active signals on BRK and BRK2 inputs. In this case, both outputs have active high polarities (CCxP = CCxNP = 0 in TIMx_CCER register).

Figure 141. PWM output state following BRK and BRK2 pins assertion (OSSI=1)

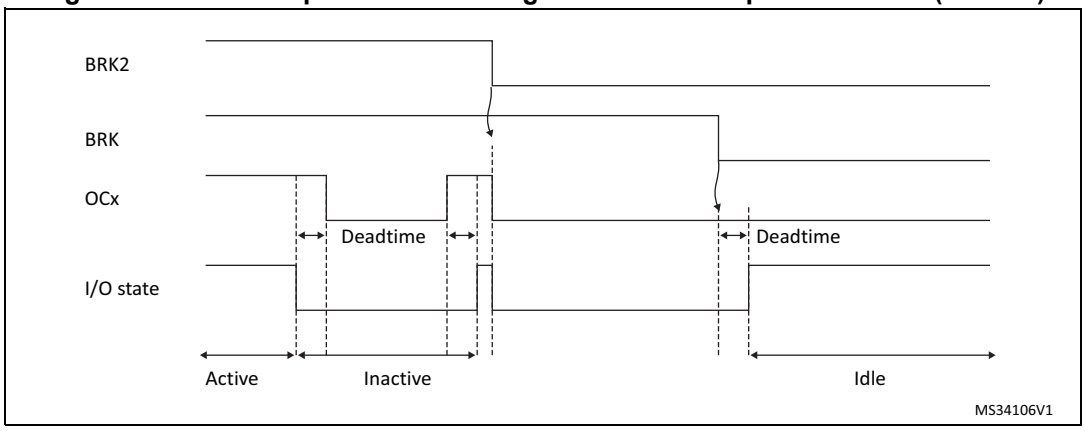

Figure 142. PWM output state following BRK assertion (OSSI=0)

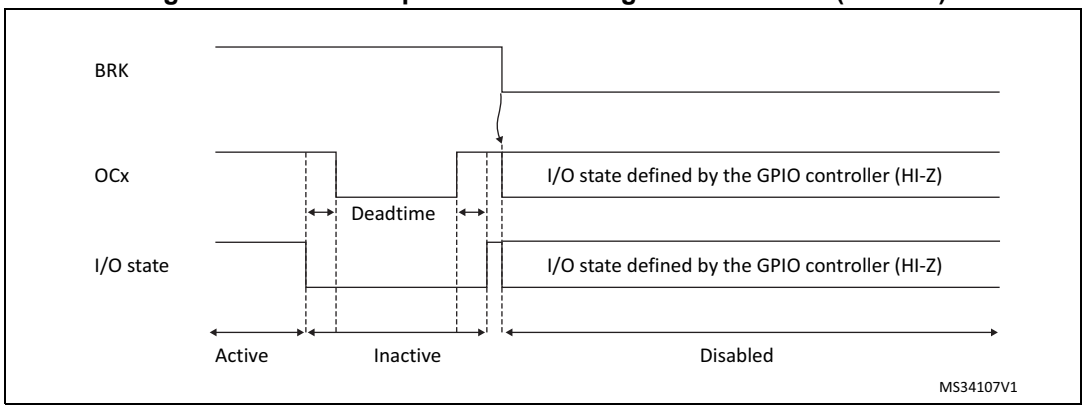

21.3.17 Bidirectional break inputs

The TIM1 are featuring bidirectional break I/Os, as represented on *Figure 143*.

They allow the following:

- A board-level global break signal available for signaling faults to external MCUs or gate drivers, with a unique pin being both an input and an output status pin
- Internal break sources and multiple external open drain comparator outputs ORed together to trigger a unique break event, when multiple internal and external break sources must be merged

The break and break2 inputs are configured in bidirectional mode using the BKBID and BK2BID bits in the TIMxBDTR register. The BKBID programming bits can be locked in read-only mode using the LOCK bits in the TIMxBDTR register (in LOCK level 1 or above).

The bidirectional mode is available for both the break and break2 inputs, and require the I/O to be configured in open-drain mode with active low polarity (using BKINP, BKP, BK2INP and BK2P bits). Any break request coming either from system (e.g. CSS), from on-chip peripherals or from break inputs forces a low level on the break input to signal the fault event. The bidirectional mode is inhibited if the polarity bits are not correctly set (active high polarity), for safety purposes.

The break software events (BG and B2G) also cause the break I/O to be forced to '0' to indicate to the external components that the timer has entered in break state. However, this is valid only if the break is enabled (BK(2)E = 1). When a software break event is generated with BK(2)E = 0, the outputs are put in safe state and the break flag is set, but there is no effect on the break(2) I/O.

A safe disarming mechanism prevents the system to be definitively locked-up (a low level on the break input triggers a break which enforces a low level on the same input).

When the BKDSRM (BK2DSRM) bit is set to 1, this releases the break output to clear a fault signal and to give the possibility to re-arm the system.

At no point the break protection circuitry can be disabled:

- The break input path is always active: a break event is active even if the BKDSRM (BK2DSRM) bit is set and the open drain control is released. This prevents the PWM output to be re-started as long as the break condition is present.
- The BK(2)DSRM bit cannot disarm the break protection as long as the outputs are enabled (MOE bit is set) (see *Table 134*)

Table 134. Break protection disarming conditions

MOE	BKDIR (BK2DIR)	BKDSRM (BK2DSRM)	Break protection state
0	0	X	Armed
0	1	0	Armed
0	1	1	Disarmed
1	X	X	Armed

Arming and re-arming break circuitry

The break circuitry (in input or bidirectional mode) is armed by default (peripheral reset configuration).

The following procedure must be followed to re-arm the protection after a break (break2) event:

- The BKDSRM (BK2DSRM) bit must be set to release the output control
- The software must wait until the system break condition disappears (if any) and clear the SBIF status flag (or clear it systematically before re-arming)
- The software must poll the BKDSRM (BK2DSRM) bit until it is cleared by hardware (when the application break condition disappears)

From this point, the break circuitry is armed and active, and the MOE bit can be set to re-enable the PWM outputs.

Figure 143. Output redirection (BRK2 request not represented)

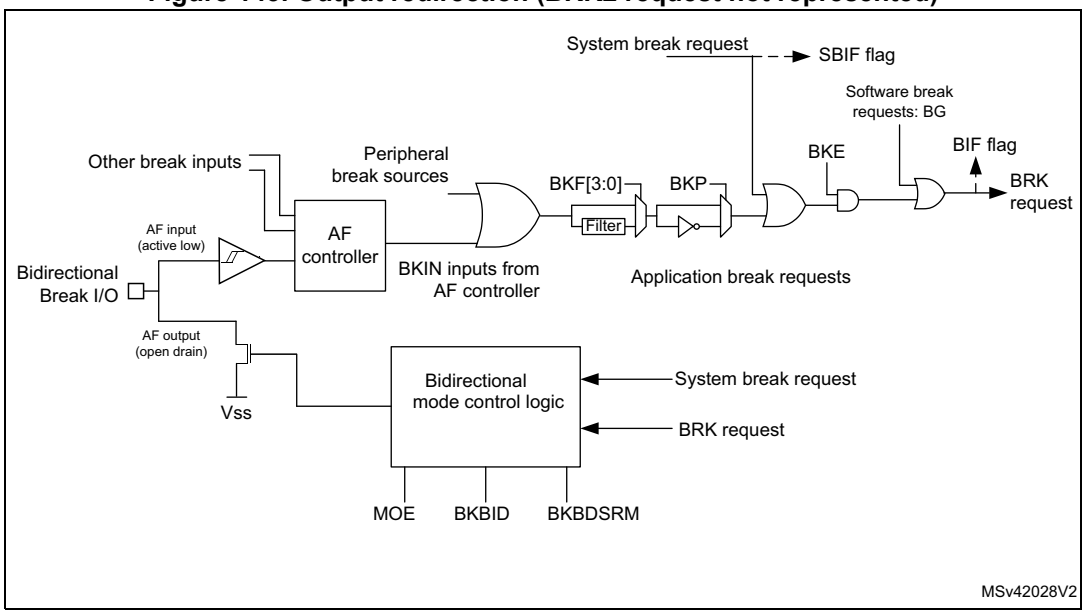

21.3.18 Clearing the OCxREF signal on an external event

The OCxREF signal of a given channel can be cleared when a high level is applied on the ocref_clr_int input (OCxCE enable bit in the corresponding TIMx_CCMRx register set to 1). OCxREF remains low until the next transition to the active state, on the following PWM cycle. This function can only be used in Output compare and PWM modes. It does not work in Forced mode. ocref_clr_int input can be selected between the OCREF_CLR input and ETRF (ETR after the filter) by configuring the OCCS bit in the TIMx_SMCR register.

When ETRF is chosen, ETR must be configured as follows:

1. The External Trigger Prescaler should be kept off: bits ETPS[1:0] of the TIMx_SMCR register set to ‘00’.
2. The external clock mode 2 must be disabled: bit ECE of the TIMx_SMCR register set to ‘0’.
3. The External Trigger Polarity (ETP) and the External Trigger Filter (ETF) can be configured according to the user needs.

Figure 144 shows the behavior of the OCxREF signal when the ETRF Input becomes High, for both values of the enable bit OCxCE. In this example, the timer TIMx is programmed in PWM mode.

Figure 144. Clearing TIMx OCxREF

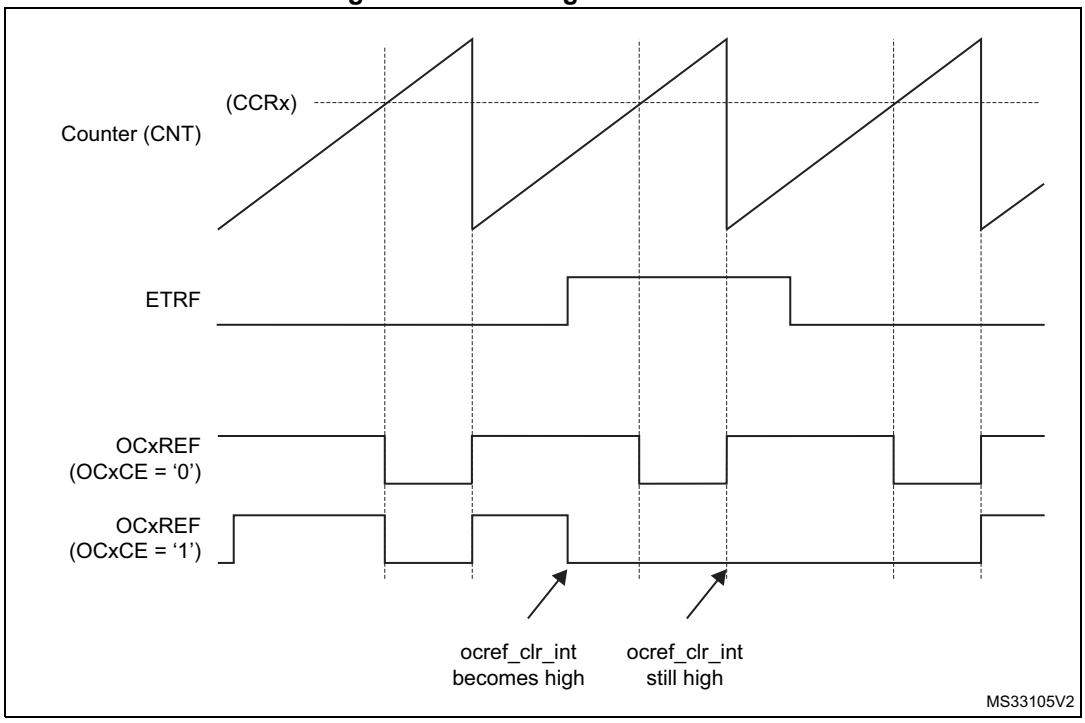

Note: In case of a PWM with a 100% duty cycle (if CCRx>ARR), then OCxREF is enabled again at the next counter overflow.

21.3.19 6-step PWM generation

When complementary outputs are used on a channel, preload bits are available on the OCxM, CCxE and CCxNE bits. The preload bits are transferred to the shadow bits at the COM commutation event. Thus one can program in advance the configuration for the next step and change the configuration of all the channels at the same time. COM can be generated by software by setting the COM bit in the TIMx_EGR register or by hardware (on TRGI rising edge).

A flag is set when the COM event occurs (COMIF bit in the TIMx_SR register), which can generate an interrupt (if the COMIE bit is set in the TIMx_DIER register) or a DMA request (if the COMDE bit is set in the TIMx_DIER register).

The *Figure 145* describes the behavior of the OCx and OCxN outputs when a COM event occurs, in 3 different examples of programmed configurations.

Figure 145. 6-step generation, COM example (OSSR=1)

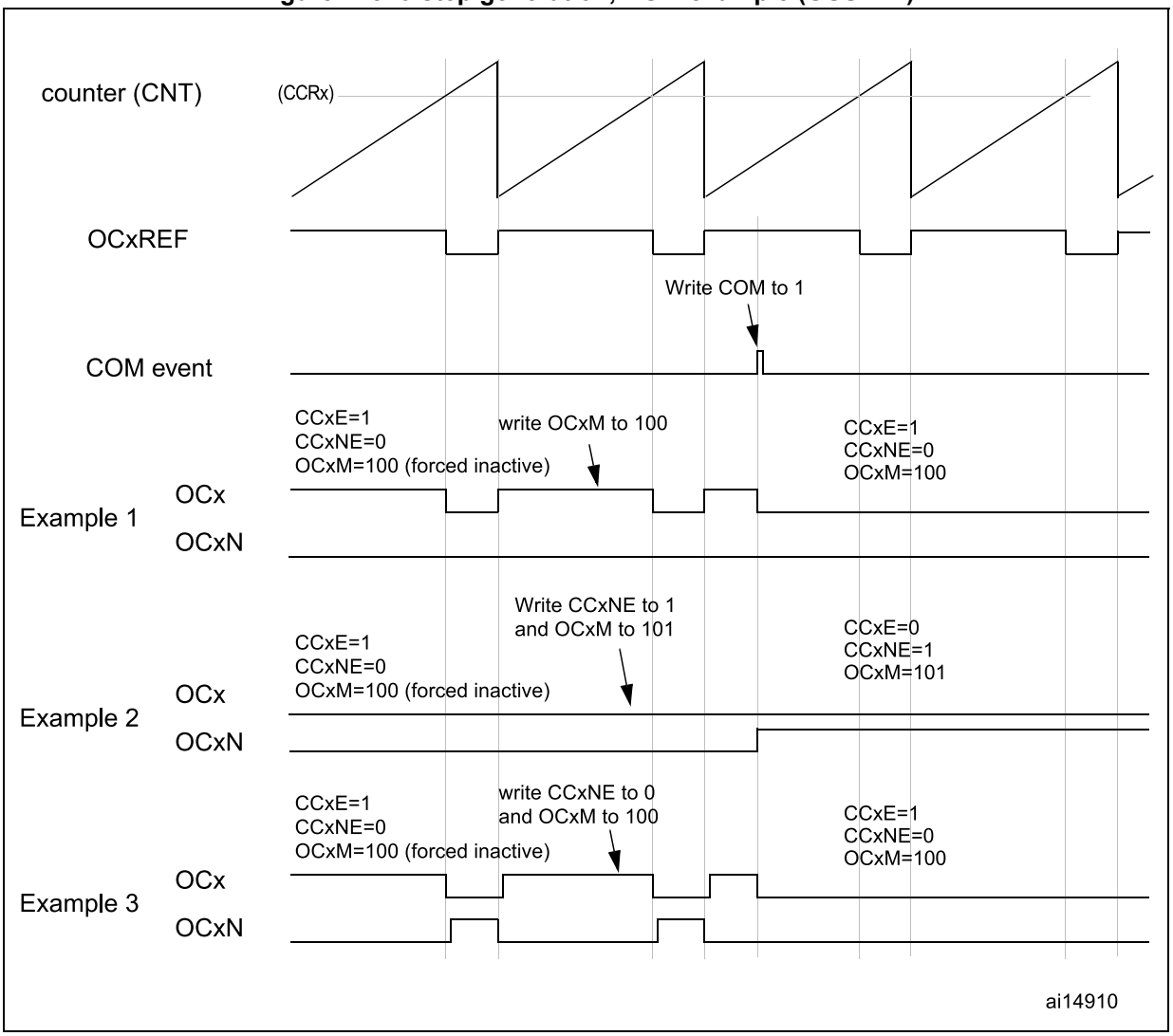

21.3.20 One-pulse mode

One-pulse mode (OPM) is a particular case of the previous modes. It allows the counter to be started in response to a stimulus and to generate a pulse with a programmable length after a programmable delay.

Starting the counter can be controlled through the slave mode controller. Generating the waveform can be done in output compare mode or PWM mode. One-pulse mode is selected by setting the OPM bit in the TIMx_CR1 register. This makes the counter stop automatically at the next update event UEV.

A pulse can be correctly generated only if the compare value is different from the counter initial value. Before starting (when the timer is waiting for the trigger), the configuration must be:

- In upcounting: CNT < CCRx ≤ ARR (in particular, 0 < CCRx)
- In downcounting: CNT > CCRx

Figure 146. Example of one pulse mode.

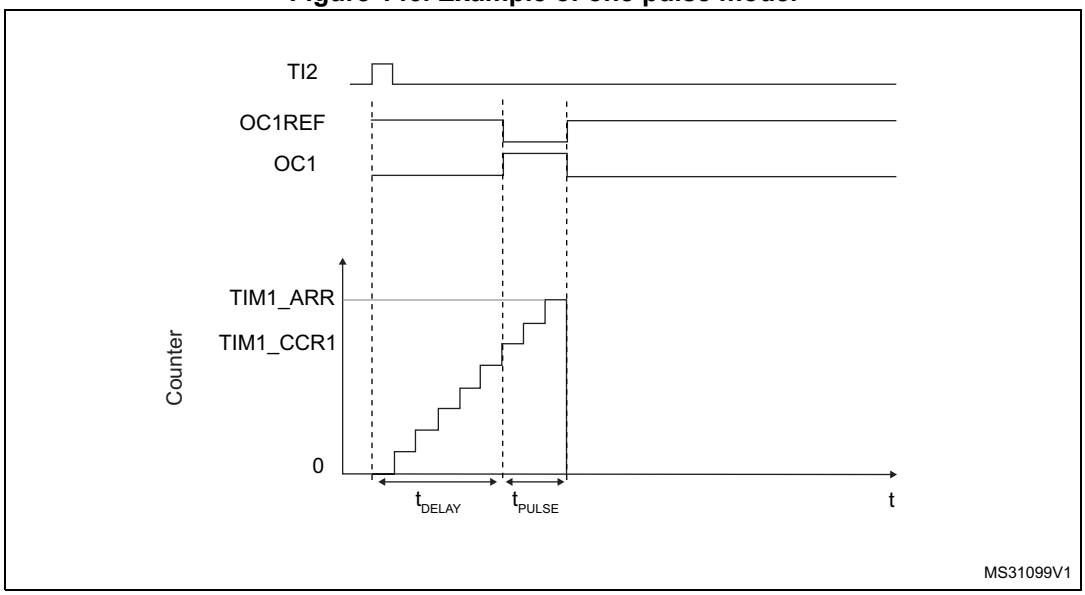

For example one may want to generate a positive pulse on OC1 with a length of t_{PULSE} and after a delay of t_{DELAY} as soon as a positive edge is detected on the TI2 input pin.

Let's use TI2FP2 as trigger 1:

1. Select the proper TI2x source (internal or external) with the TI2SEL[3:0] bits in the TIMx_TISEL register.
2. Map TI2FP2 to TI2 by writing CC2S='01' in the TIMx_CCMR1 register.
3. TI2FP2 must detect a rising edge, write CC2P='0' and CC2NP='0' in the TIMx_CCER register.
4. Configure TI2FP2 as trigger for the slave mode controller (TRGI) by writing TS=00110 in the TIMx_SMCR register.
5. TI2FP2 is used to start the counter by writing SMS to '110' in the TIMx_SMCR register (trigger mode).

The OPM waveform is defined by writing the compare registers (taking into account the clock frequency and the counter prescaler).

- The t_{DELAY} is defined by the value written in the TIMx_CCR1 register.
- The t_{PULSE} is defined by the difference between the auto-reload value and the compare value (TIMx_ARR - TIMx_CCR1).
- Let's say one want to build a waveform with a transition from '0' to '1' when a compare match occurs and a transition from '1' to '0' when the counter reaches the auto-reload value. To do this PWM mode 2 must be enabled by writing OC1M=111 in the TIMx_CCMR1 register. Optionally the preload registers can be enabled by writing OC1PE='1' in the TIMx_CCMR1 register and ARPE in the TIMx_CR1 register. In this case one has to write the compare value in the TIMx_CCR1 register, the auto-reload value in the TIMx_ARR register, generate an update by setting the UG bit and wait for external trigger event on TI2. CC1P is written to '0' in this example.

In our example, the DIR and CMS bits in the TIMx_CR1 register should be low.

Since only 1 pulse (Single mode) is needed, a 1 must be written in the OPM bit in the TIMx_CR1 register to stop the counter at the next update event (when the counter rolls over from the auto-reload value back to 0). When OPM bit in the TIMx_CR1 register is set to '0', so the Repetitive Mode is selected.

Particular case: OCx fast enable:

In One-pulse mode, the edge detection on TIx input set the CEN bit which enables the counter. Then the comparison between the counter and the compare value makes the output toggle. But several clock cycles are needed for these operations and it limits the minimum delay t_{DELAY} min we can get.

If one wants to output a waveform with the minimum delay, the OCxFE bit can be set in the TIMx_CCMRx register. Then OCxRef (and OCx) are forced in response to the stimulus, without taking in account the comparison. Its new level is the same as if a compare match had occurred. OCxFE acts only if the channel is configured in PWM1 or PWM2 mode.

21.3.21 Retriggerable one pulse mode

This mode allows the counter to be started in response to a stimulus and to generate a pulse with a programmable length, but with the following differences with Non-retriggerable one pulse mode described in *Section 21.3.20*:

- The pulse starts as soon as the trigger occurs (no programmable delay)
- The pulse is extended if a new trigger occurs before the previous one is completed

The timer must be in Slave mode, with the bits SMS[3:0] = '1000' (Combined Reset + trigger mode) in the TIMx_SMCR register, and the OCxM[3:0] bits set to '1000' or '1001' for retriggerable OPM mode 1 or 2.

If the timer is configured in Up-counting mode, the corresponding CCRx must be set to 0 (the ARR register sets the pulse length). If the timer is configured in Down-counting mode, CCRx must be above or equal to ARR.

Note: The OCxM[3:0] and SMS[3:0] bit fields are split into two parts for compatibility reasons, the most significant bit are not contiguous with the 3 least significant ones.

This mode must not be used with center-aligned PWM modes. It is mandatory to have CMS[1:0] = 00 in TIMx_CR1.

Figure 147. Retriggerable one pulse mode

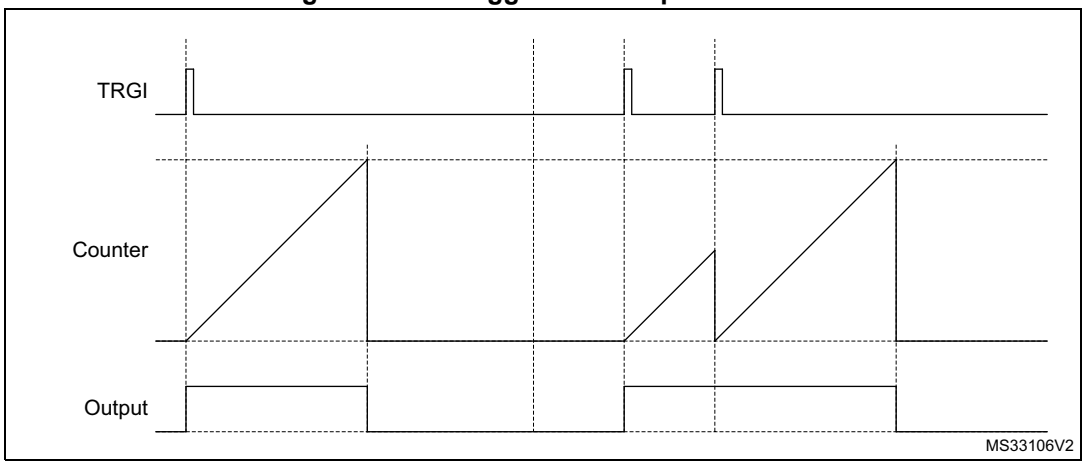

21.3.22 Encoder interface mode

To select Encoder Interface mode write SMS=‘001’ in the TIMx_SMCR register if the counter is counting on TI2 edges only, SMS=’010’ if it is counting on TI1 edges only and SMS=’011’ if it is counting on both TI1 and TI2 edges.

Select the TI1 and TI2 polarity by programming the CC1P and CC2P bits in the TIMx_CCER register. When needed, the input filter can be programmed as well. CC1NP and CC2NP must be kept low.

The two inputs TI1 and TI2 are used to interface to a quadrature encoder. Refer to *Table 135*. The counter is clocked by each valid transition on TI1FP1 or TI2FP2 (TI1 and TI2 after input filter and polarity selection, TI1FP1=TI1 if not filtered and not inverted, TI2FP2=TI2 if not filtered and not inverted) assuming that it is enabled (CEN bit in TIMx_CR1 register written to ‘1’). The sequence of transitions of the two inputs is evaluated and generates count pulses as well as the direction signal. Depending on the sequence the counter counts up or down, the DIR bit in the TIMx_CR1 register is modified by hardware accordingly. The DIR bit is calculated at each transition on any input (TI1 or TI2), whatever the counter is counting on TI1 only, TI2 only or both TI1 and TI2.

Encoder interface mode acts simply as an external clock with direction selection. This means that the counter just counts continuously between 0 and the auto-reload value in the TIMx_ARR register (0 to ARR or ARR down to 0 depending on the direction). So the TIMx_ARR must be configured before starting. In the same way, the capture, compare, repetition counter, trigger output features continue to work as normal. Encoder mode and External clock mode 2 are not compatible and must not be selected together.

Note: The prescaler must be set to zero when encoder mode is enabled

In this mode, the counter is modified automatically following the speed and the direction of the quadrature encoder and its content, therefore, always represents the encoder’s position. The count direction correspond to the rotation direction of the connected sensor. The table summarizes the possible combinations, assuming TI1 and TI2 do not switch at the same time.

Table 135. Counting direction versus encoder signals

Active edge	Level on opposite signal (TI1FP1 for TI2, TI2FP2 for TI1)	TI1FP1 signal		TI2FP2 signal	
		Rising	Falling	Rising	Falling
Counting on TI1 only	High	Down	Up	No Count	No Count
	Low	Up	Down	No Count	No Count
Counting on TI2 only	High	No Count	No Count	Up	Down
	Low	No Count	No Count	Down	Up
Counting on TI1 and TI2	High	Down	Up	Up	Down
	Low	Up	Down	Down	Up

A quadrature encoder can be connected directly to the MCU without external interface logic. However, comparators are normally be used to convert the encoder's differential outputs to digital signals. This greatly increases noise immunity. The third encoder output which indicate the mechanical zero position, may be connected to an external interrupt input and trigger a counter reset.

The *Figure 148* gives an example of counter operation, showing count signal generation and direction control. It also shows how input jitter is compensated where both edges are selected. This might occur if the sensor is positioned near to one of the switching points. For this example we assume that the configuration is the following:

- CC1S='01' (TIMx_CCMR1 register, TI1FP1 mapped on TI1).
- CC2S='01' (TIMx_CCMR1 register, TI2FP2 mapped on TI2)
- CC1P='0' and CC1NP='0' (TIMx_CCER register, TI1FP1 non-inverted, TI1FP1=TI1).
- CC2P='0' and CC2NP='0' (TIMx_CCER register, TI1FP2 non-inverted, TI1FP2= TI2).
- SMS='011' (TIMx_SMCR register, both inputs are active on both rising and falling edges).
- CEN='1' (TIMx_CR1 register, Counter enabled).

Figure 148. Example of counter operation in encoder interface mode.

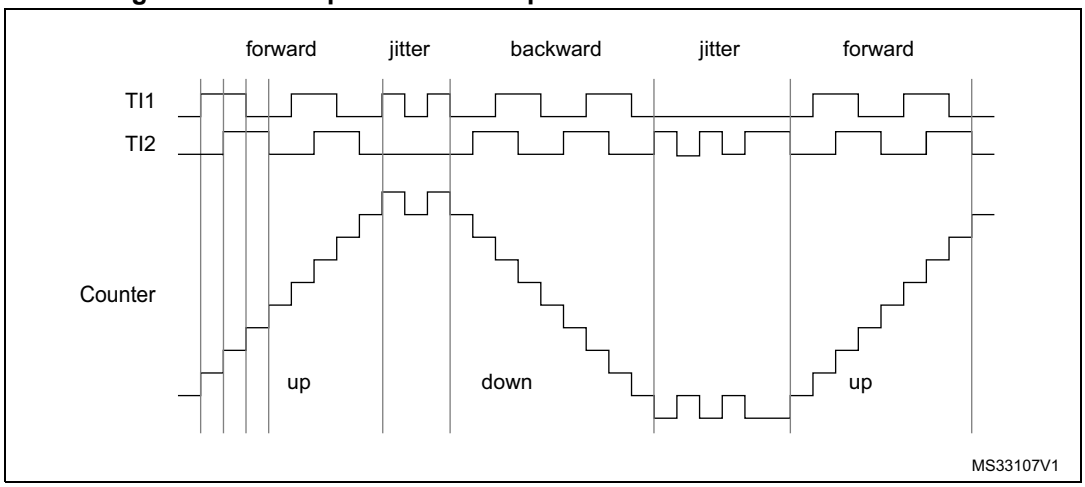

Figure 149 gives an example of counter behavior when TI1FP1 polarity is inverted (same configuration as above except CC1P='1').

Figure 149. Example of encoder interface mode with TI1FP1 polarity inverted.

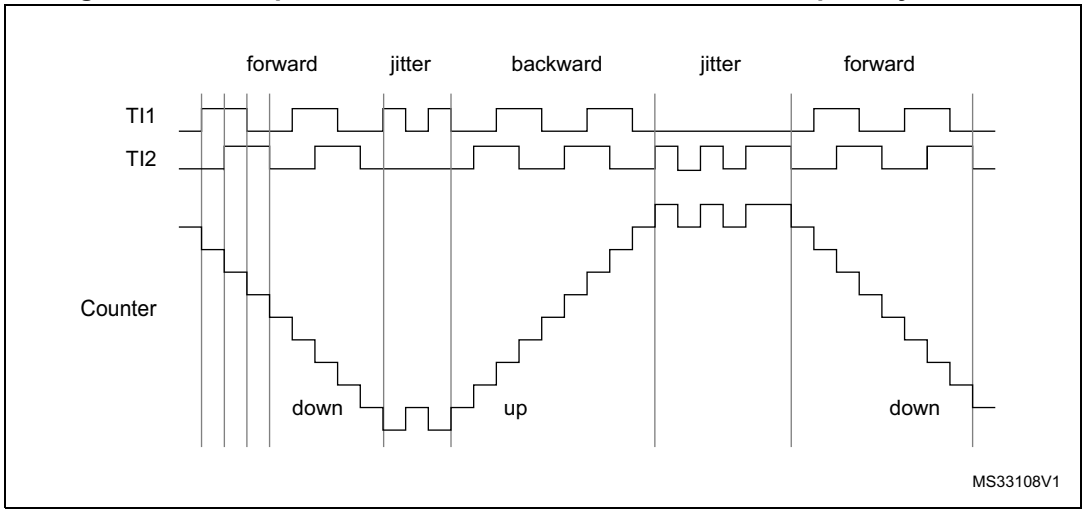

The timer, when configured in Encoder Interface mode provides information on the sensor's current position. Dynamic information can be obtained (speed, acceleration, deceleration) by measuring the period between two encoder events using a second timer configured in capture mode. The output of the encoder which indicates the mechanical zero can be used for this purpose. Depending on the time between two events, the counter can also be read at regular times. This can be done by latching the counter value into a third input capture register if available (then the capture signal must be periodic and can be generated by another timer). when available, it is also possible to read its value through a DMA request.

The IUFREMAP bit in the TIMx_CR1 register forces a continuous copy of the update interrupt flag (UIF) into the timer counter register's bit 31 (TIMxCNT[31]). This allows both the counter value and a potential roll-over condition signaled by the UIFCPY flag to be read in an atomic way. It eases the calculation of angular speed by avoiding race conditions caused, for instance, by a processing shared between a background task (counter reading) and an interrupt (update interrupt).

There is no latency between the UIF and UIFCPY flag assertions.

In 32-bit timer implementations, when the IUFREMAP bit is set, bit 31 of the counter is overwritten by the UIFCPY flag upon read access (the counter's most significant bit is only accessible in write mode).

21.3.23 UIF bit remapping

The IUFREMAP bit in the TIMx_CR1 register forces a continuous copy of the Update Interrupt Flag UIF into the timer counter register's bit 31 (TIMxCNT[31]). This allows both the counter value and a potential roll-over condition signaled by the UIFCPY flag to be read in an atomic way. In particular cases, it can ease the calculations by avoiding race conditions, caused for instance by a processing shared between a background task (counter reading) and an interrupt (Update Interrupt).

There is no latency between the UIF and UIFCPY flags assertion.

21.3.24 Timer input XOR function

The TI1S bit in the TIMx_CR2 register, allows the input filter of channel 1 to be connected to the output of an XOR gate, combining the three input pins TIMx_CH1, TIMx_CH2 and TIMx_CH3.

The XOR output can be used with all the timer input functions such as trigger or input capture. It is convenient to measure the interval between edges on two input signals, as per *Figure 150* below.

Figure 150. Measuring time interval between edges on 3 signals

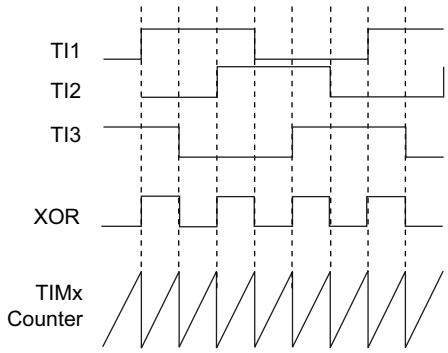

21.3.25 Interfacing with Hall sensors

This is done using the advanced-control timer (TIM1) to generate PWM signals to drive the motor and another timer TIMx (TIM2) referred to as “interfacing timer” in *Figure 151*. The “interfacing timer” captures the 3 timer input pins (CC1, CC2, CC3) connected through a XOR to the TI1 input channel (selected by setting the TI1S bit in the TIMx_CR2 register).

The slave mode controller is configured in reset mode; the slave input is TI1F_ED. Thus, each time one of the 3 inputs toggles, the counter restarts counting from 0. This creates a time base triggered by any change on the Hall inputs.

On the “interfacing timer”, capture/compare channel 1 is configured in capture mode, capture signal is TRC (See *Figure 124: Capture/compare channel (example: channel 1 input stage) on page 544*). The captured value, which corresponds to the time elapsed between 2 changes on the inputs, gives information about motor speed.

The “interfacing timer” can be used in output mode to generate a pulse which changes the configuration of the channels of the advanced-control timer (TIM1) (by triggering a COM event). The TIM1 timer is used to generate PWM signals to drive the motor. To do this, the interfacing timer channel must be programmed so that a positive pulse is generated after a programmed delay (in output compare or PWM mode). This pulse is sent to the advanced-control timer (TIM1) through the TRGO output.

Example: one wants to change the PWM configuration of the advanced-control timer TIM1 after a programmed delay each time a change occurs on the Hall inputs connected to one of the TIMx timers.

- Configure 3 timer inputs ORed to the TI1 input channel by writing the TI1S bit in the TIMx_CR2 register to ‘1’,
- Program the time base: write the TIMx_ARR to the max value (the counter must be cleared by the TI1 change. Set the prescaler to get a maximum counter period longer than the time between 2 changes on the sensors,
- Program the channel 1 in capture mode (TRC selected): write the CC1S bits in the TIMx_CCMR1 register to ‘11’. The digital filter can also be programmed if needed,
- Program the channel 2 in PWM 2 mode with the desired delay: write the OC2M bits to ‘111’ and the CC2S bits to ‘00’ in the TIMx_CCMR1 register,
- Select OC2REF as trigger output on TRGO: write the MMS bits in the TIMx_CR2 register to ‘101’,

In the advanced-control timer TIM1, the right ITR input must be selected as trigger input, the timer is programmed to generate PWM signals, the capture/compare control signals are preloaded (CCPC=1 in the TIMx_CR2 register) and the COM event is controlled by the trigger input (CCUS=1 in the TIMx_CR2 register). The PWM control bits (CCxE, OCxM) are written after a COM event for the next step (this can be done in an interrupt subroutine generated by the rising edge of OC2REF).

The *Figure 151* describes this example.

Figure 151. Example of Hall sensor interface

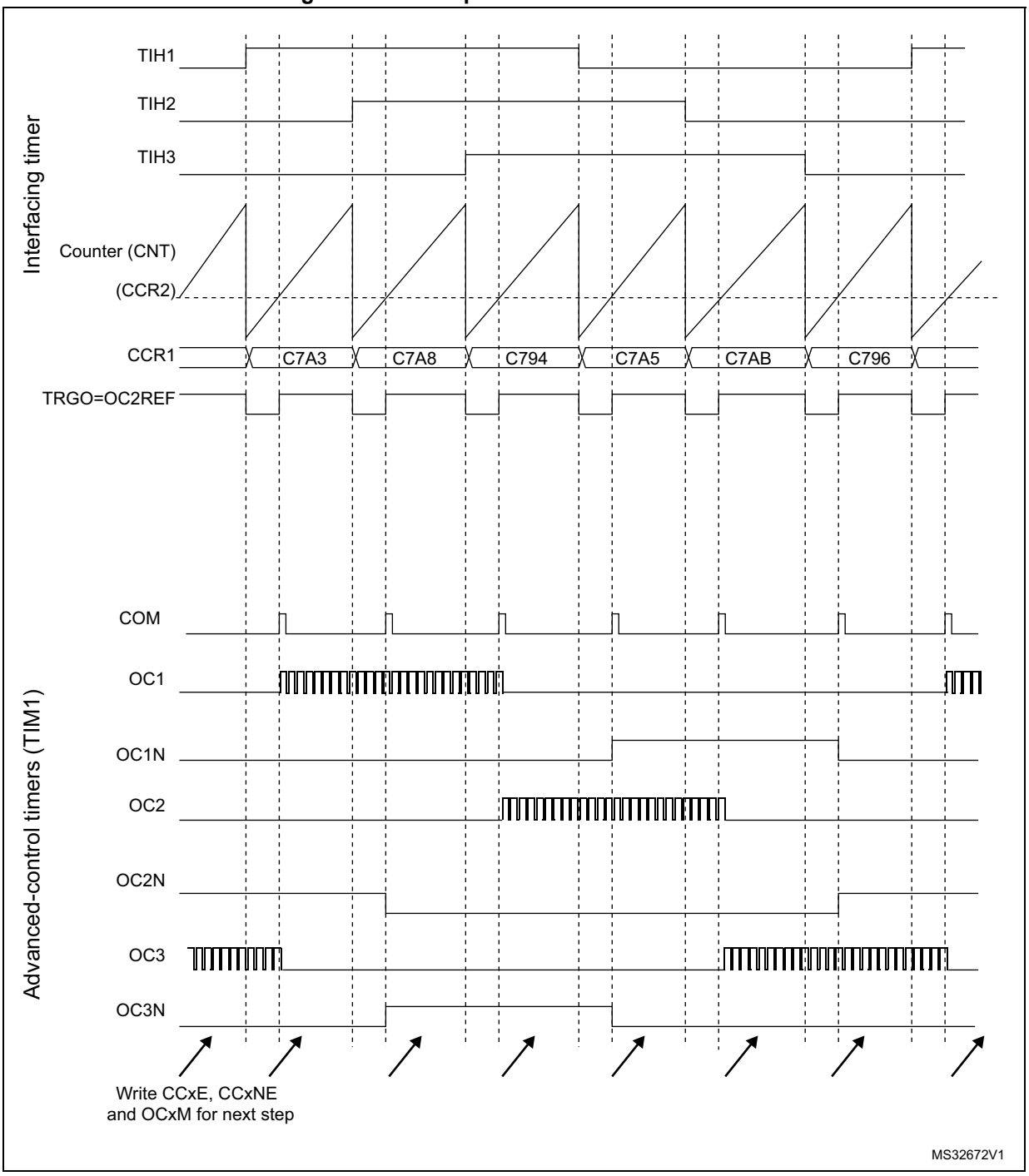

21.3.26 Timer synchronization

The TIMx timers are linked together internally for timer synchronization or chaining. Refer to *Section 22.3.19: Timer synchronization* for details. They can be synchronized in several modes: Reset mode, Gated mode, and Trigger mode.

Slave mode: Reset mode

The counter and its prescaler can be reinitialized in response to an event on a trigger input. Moreover, if the URS bit from the TIMx_CR1 register is low, an update event UEV is generated. Then all the preloaded registers (TIMx_ARR, TIMx_CCRx) are updated.

In the following example, the upcounter is cleared in response to a rising edge on TI1 input:

- Configure the channel 1 to detect rising edges on TI1. Configure the input filter duration (in this example, we do not need any filter, so we keep IC1F=0000). The capture prescaler is not used for triggering, so it does not need to be configured. The CC1S bits select the input capture source only, CC1S = 01 in the TIMx_CCMR1 register. Write CC1P=0 and CC1NP=’0’ in TIMx_CCER register to validate the polarity (and detect rising edges only).
- Configure the timer in reset mode by writing SMS=100 in TIMx_SMCR register. Select TI1 as the input source by writing TS=00101 in TIMx_SMCR register.
- Start the counter by writing CEN=1 in the TIMx_CR1 register.

The counter starts counting on the internal clock, then behaves normally until TI1 rising edge. When TI1 rises, the counter is cleared and restarts from 0. In the meantime, the trigger flag is set (TIF bit in the TIMx_SR register) and an interrupt request, or a DMA request can be sent if enabled (depending on the TIE and TDE bits in TIMx_DIER register).

The following figure shows this behavior when the auto-reload register TIMx_ARR=0x36. The delay between the rising edge on TI1 and the actual reset of the counter is due to the resynchronization circuit on TI1 input.

Figure 152. Control circuit in reset mode

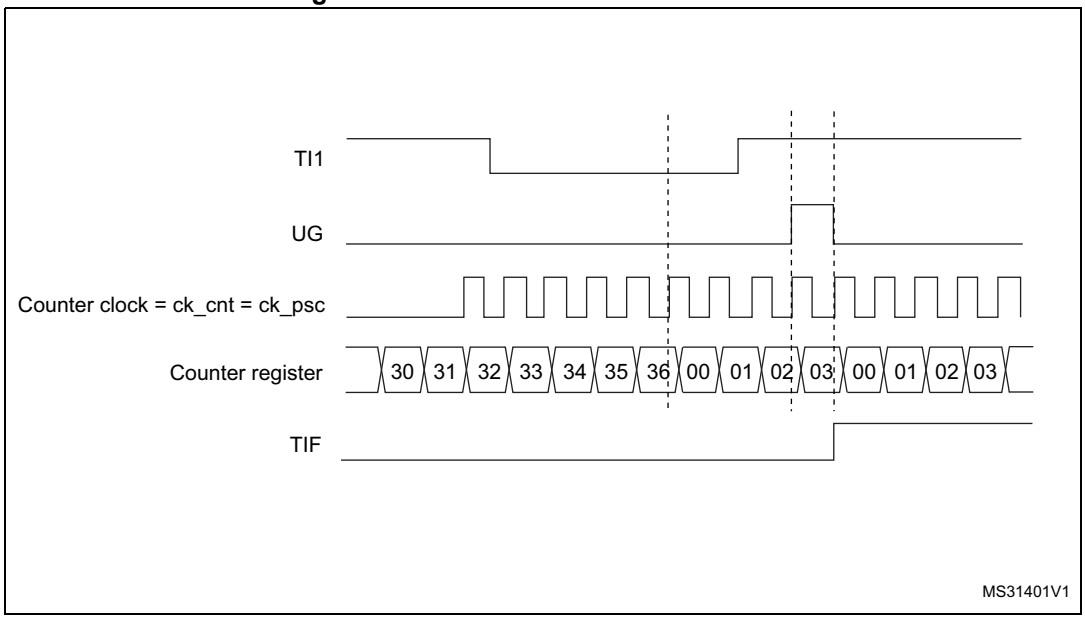

Slave mode: Gated mode

The counter can be enabled depending on the level of a selected input.

In the following example, the upcounter counts only when TI1 input is low:

- Configure the channel 1 to detect low levels on TI1. Configure the input filter duration (in this example, we do not need any filter, so we keep IC1F=0000). The capture prescaler is not used for triggering, so it does not need to be configured. The CC1S bits select the input capture source only, CC1S=01 in TIMx_CCMR1 register. Write CC1P=1 and CC1NP='0' in TIMx_CCER register to validate the polarity (and detect low level only).
- Configure the timer in gated mode by writing SMS=101 in TIMx_SMCR register. Select TI1 as the input source by writing TS=00101 in TIMx_SMCR register.
- Enable the counter by writing CEN=1 in the TIMx_CR1 register (in gated mode, the counter doesn't start if CEN=0, whatever is the trigger input level).

The counter starts counting on the internal clock as long as TI1 is low and stops as soon as TI1 becomes high. The TIF flag in the TIMx_SR register is set both when the counter starts or stops.

The delay between the rising edge on TI1 and the actual stop of the counter is due to the resynchronization circuit on TI1 input.

Figure 153. Control circuit in Gated mode

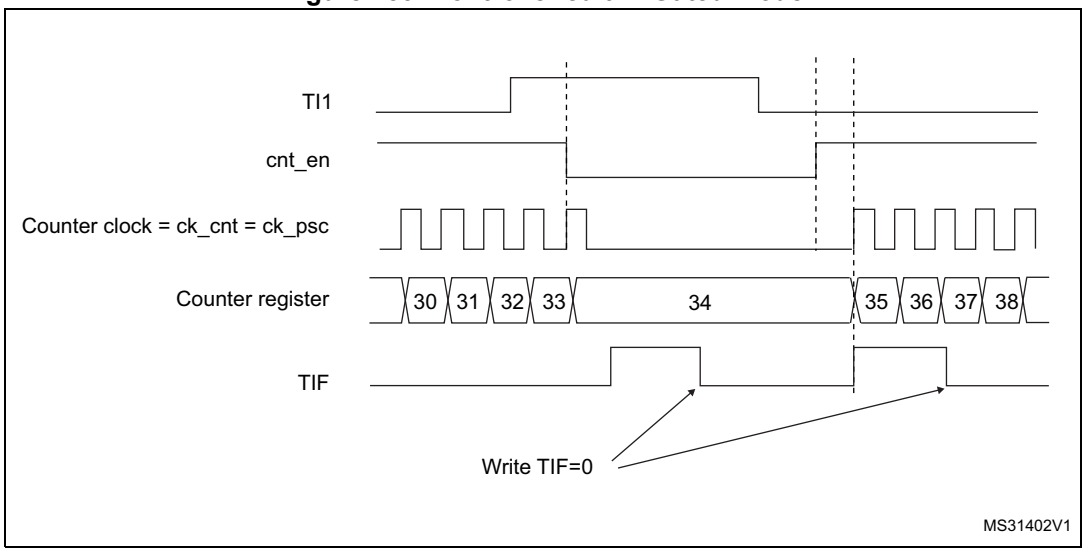

Slave mode: Trigger mode

The counter can start in response to an event on a selected input.

In the following example, the upcounter starts in response to a rising edge on TI2 input:

- Configure the channel 2 to detect rising edges on TI2. Configure the input filter duration (in this example, we do not need any filter, so we keep IC2F=0000). The capture prescaler is not used for triggering, so it does not need to be configured. The CC2S bits are configured to select the input capture source only, CC2S=01 in TIMx_CCMR1

register. Write CC2P=1 and CC2NP=0 in TIMx_CCER register to validate the polarity (and detect low level only).

- Configure the timer in trigger mode by writing SMS=110 in TIMx_SMCR register. Select TI2 as the input source by writing TS=00110 in TIMx_SMCR register.

When a rising edge occurs on TI2, the counter starts counting on the internal clock and the TIF flag is set.

The delay between the rising edge on TI2 and the actual start of the counter is due to the resynchronization circuit on TI2 input.

Figure 154. Control circuit in trigger mode

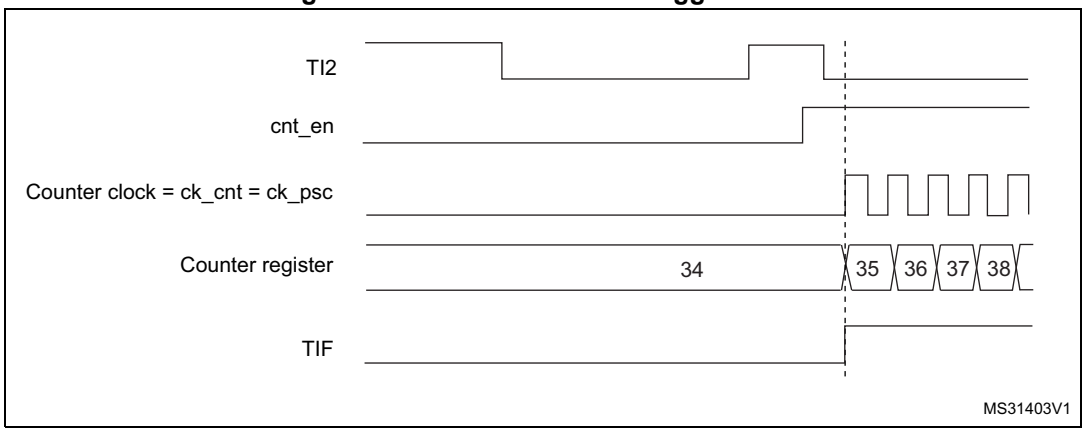

Slave mode: Combined reset + trigger mode

In this case, a rising edge of the selected trigger input (TRGI) reinitializes the counter, generates an update of the registers, and starts the counter.

This mode is used for one-pulse mode.

Slave mode: external clock mode 2 + trigger mode

The external clock mode 2 can be used in addition to another slave mode (except external clock mode 1 and encoder mode). In this case, the ETR signal is used as external clock input, and another input can be selected as trigger input (in reset mode, gated mode or trigger mode). It is recommended not to select ETR as TRGI through the TS bits of TIMx_SMCR register.

In the following example, the upcounter is incremented at each rising edge of the ETR signal as soon as a rising edge of TI1 occurs:

1. Configure the external trigger input circuit by programming the TIMx_SMCR register as follows:
   - ETF = 0000: no filter
   - ETPS = 00: prescaler disabled
   - ETP = 0: detection of rising edges on ETR and ECE=1 to enable the external clock mode 2.
2. Configure the channel 1 as follows, to detect rising edges on TI:
   - IC1F = 0000: no filter.
   - The capture prescaler is not used for triggering and does not need to be configured.
   - CC1S = 01 in TIMx_CCMR1 register to select only the input capture source
   - CC1P = 0 and CC1NP = 0 in TIMx_CCER register to validate the polarity (and detect rising edge only).
3. Configure the timer in trigger mode by writing SMS=110 in TIMx_SMCR register. Select TI1 as the input source by writing TS=00101 in TIMx_SMCR register.

A rising edge on TI1 enables the counter and sets the TIF flag. The counter then counts on ETR rising edges.

The delay between the rising edge of the ETR signal and the actual reset of the counter is due to the resynchronization circuit on ETRP input.

Figure 155. Control circuit in external clock mode 2 + trigger mode

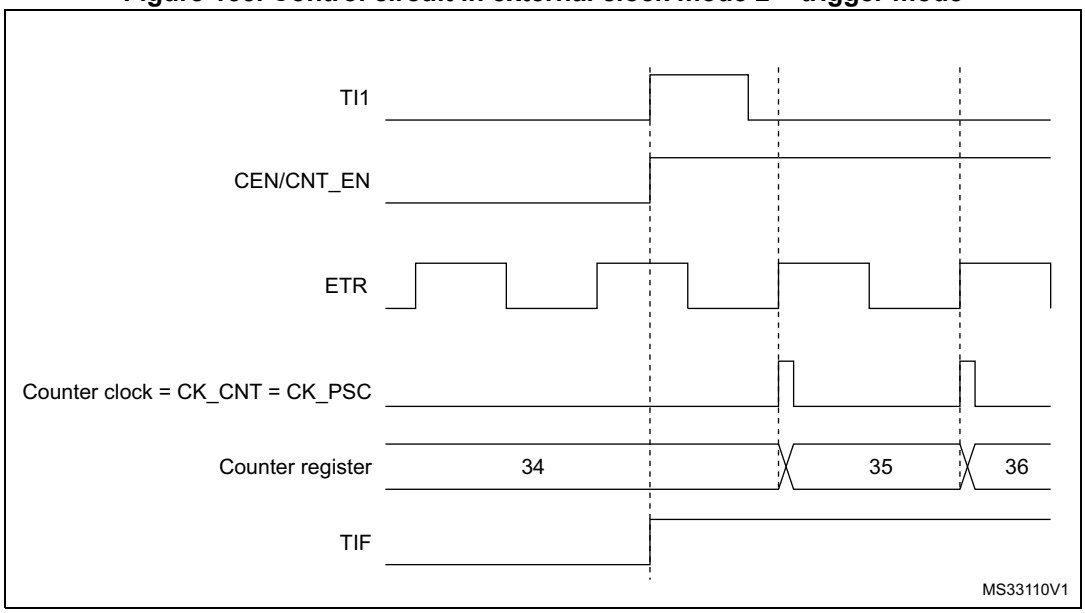

Note: The clock of the slave peripherals (timer, ADC, ...) receiving the TRGO or the TRGO2 signals must be enabled prior to receive events from the master timer, and the clock frequency (prescaler) must not be changed on-the-fly while triggers are received from the master timer.

21.3.27 ADC synchronization

The timer can generate an ADC triggering event with various internal signals, such as reset, enable or compare events. It is also possible to generate a pulse issued by internal edge detectors, such as:

- Rising and falling edges of OC4ref
- Rising edge on OC5ref or falling edge on OC6ref

The triggers are issued on the TRGO2 internal line which is redirected to the ADC. There is a total of 16 possible events, which can be selected using the MMS2[3:0] bits in the TIMx_CR2 register.

An example of an application for 3-phase motor drives is given in *Figure 135 on page 556*.

Note: The clock of the slave peripherals (timer, ADC, ...) receiving the TRGO or the TRGO2 signals must be enabled prior to receive events from the master timer, and the clock frequency (prescaler) must not be changed on-the-fly while triggers are received from the master timer.

Note: The clock of the ADC must be enabled prior to receive events from the master timer, and must not be changed on-the-fly while triggers are received from the timer.

21.3.28 DMA burst mode

The TIMx timers have the capability to generate multiple DMA requests upon a single event. The main purpose is to be able to re-program part of the timer multiple times without software overhead, but it can also be used to read several registers in a row, at regular intervals.

The DMA controller destination is unique and must point to the virtual register TIMx_DMAR. On a given timer event, the timer launches a sequence of DMA requests (burst). Each write into the TIMx_DMAR register is actually redirected to one of the timer registers.

The DBL[4:0] bits in the TIMx_DCR register set the DMA burst length. The timer recognizes a burst transfer when a read or a write access is done to the TIMx_DMAR address), i.e. the number of transfers (either in half-words or in bytes).

The DBA[4:0] bits in the TIMx_DCR registers define the DMA base address for DMA transfers (when read/write access are done through the TIMx_DMAR address). DBA is defined as an offset starting from the address of the TIMx_CR1 register:

Example:

00000: TIMx_CR1

00001: TIMx_CR2

00010: TIMx_SMCR

As an example, the timer DMA burst feature is used to update the contents of the CCRx registers (x = 2, 3, 4) upon an update event, with the DMA transferring half words into the CCRx registers.

This is done in the following steps:

1. Configure the corresponding DMA channel as follows:
   - DMA channel peripheral address is the DMAR register address
   - DMA channel memory address is the address of the buffer in the RAM containing the data to be transferred by DMA into CCRx registers.
   - Number of data to transfer = 3 (See note below).
   - Circular mode disabled.
2. Configure the DCR register by configuring the DBA and DBL bit fields as follows: DBL = 3 transfers, DBA = 0xE.
3. Enable the TIMx update DMA request (set the UDE bit in the DIER register).
4. Enable TIMx
5. Enable the DMA channel

This example is for the case where every CCRx register to be updated once. If every CCRx register is to be updated twice for example, the number of data to transfer should be 6. Let's take the example of a buffer in the RAM containing data1, data2, data3, data4, data5 and data6. The data is transferred to the CCRx registers as follows: on the first update DMA request, data1 is transferred to CCR2, data2 is transferred to CCR3, data3 is transferred to CCR4 and on the second update DMA request, data4 is transferred to CCR2, data5 is transferred to CCR3 and data6 is transferred to CCR4.

Note: A null value can be written to the reserved registers.

21.3.29 Debug mode

When the system enters debug mode (processor core halted), the TIMx counter either continues to work normally or stops, depending on DBG_TIM1_STOP configuration bit in DBGMCU module.

For safety purposes, when the counter is stopped, the outputs are disabled (as if the MOE bit was reset). The outputs can either be forced to an inactive state (OSSI bit = 1), or have their control taken over by the GPIO controller (OSSI bit = 0), typically to force a Hi-Z.

For more details, refer to section Debug support (DBG).

21.4 TIM1 registers

Refer to for a list of abbreviations used in register descriptions.

The peripheral registers can be accessed by half-words (16-bit) or words (32-bit).

21.4.1 TIM1 control register 1 (TIM1_CR1)

Address offset: 0x00

Reset value: 0x0000

15	14	13	12	11	10	9	8	7	6	5	4	3	2	1	0
Res.	Res.	Res.	Res.	UIFREMAP	Res.	CKD[1:0]		ARPE	CMS[1:0]		DIR	OPM	URS	UDIS	CEN
				rw		rw	rw	rw	rw	rw	rw	rw	rw	rw	rw

Bits 15:12 Reserved, must be kept at reset value.

Bit 11 **UIFREMAP**: UIF status bit remapping

0: No remapping. UIF status bit is not copied to TIMx_CNT register bit 31.
1: Remapping enabled. UIF status bit is copied to TIMx_CNT register bit 31.

Bit 10 Reserved, must be kept at reset value.

Bits 9:8 **CKD[1:0]**: Clock division

This bit-field indicates the division ratio between the timer clock (CK_INT) frequency and the dead-time and sampling clock (t_{DTS})used by the dead-time generators and the digital filters (ETR, TIx):

00: $t_{DTS}=t_{CK_INT}$
01: $t_{DTS}=2*t_{CK_INT}$
10: $t_{DTS}=4*t_{CK_INT}$
11: Reserved, do not program this value

Note: $t_{DTS} = 1/f_{DTS}$, $t_{CK_INT} = 1/f_{CK_INT}$.

Bit 7 **ARPE**: Auto-reload preload enable

0: TIMx_ARR register is not buffered
1: TIMx_ARR register is buffered

Bits 6:5 **CMS[1:0]**: Center-aligned mode selection

00: Edge-aligned mode. The counter counts up or down depending on the direction bit (DIR).
01: Center-aligned mode 1. The counter counts up and down alternatively. Output compare interrupt flags of channels configured in output (CCxS=00 in TIMx_CCMRx register) are set only when the counter is counting down.
10: Center-aligned mode 2. The counter counts up and down alternatively. Output compare interrupt flags of channels configured in output (CCxS=00 in TIMx_CCMRx register) are set only when the counter is counting up.
11: Center-aligned mode 3. The counter counts up and down alternatively. Output compare interrupt flags of channels configured in output (CCxS=00 in TIMx_CCMRx register) are set both when the counter is counting up or down.

Note: Switch from edge-aligned mode to center-aligned mode as long as the counter is enabled (CEN=1) is not allowed

Bit 4 **DIR**: Direction

0: Counter used as upcounter
1: Counter used as downcounter

Note: This bit is read only when the timer is configured in Center-aligned mode or Encoder mode.

Bit 3 **OPM**: One pulse mode

0: Counter is not stopped at update event
1: Counter stops counting at the next update event (clearing the bit CEN)

Bit 2 **URS**: Update request source

This bit is set and cleared by software to select the UEV event sources.

0: Any of the following events generate an update interrupt or DMA request if enabled. These events can be:
- Counter overflow/underflow
- Setting the UG bit
- Update generation through the slave mode controller

1: Only counter overflow/underflow generates an update interrupt or DMA request if enabled.

Bit 1 **UDIS**: Update disable

This bit is set and cleared by software to enable/disable UEV event generation.

0: UEV enabled. The Update (UEV) event is generated by one of the following events:
- Counter overflow/underflow
- Setting the UG bit
- Update generation through the slave mode controller

Buffered registers are then loaded with their preload values.

1: UEV disabled. The Update event is not generated, shadow registers keep their value (ARR, PSC, CCRx). However the counter and the prescaler are reinitialized if the UG bit is set or if a hardware reset is received from the slave mode controller.

Bit 0 **CEN**: Counter enable

0: Counter disabled
1: Counter enabled

Note: External clock, gated mode and encoder mode can work only if the CEN bit has been previously set by software. However trigger mode can set the CEN bit automatically by hardware.

21.4.2 TIM1 control register 2 (TIM1_CR2)

Address offset: 0x04

Reset value: 0x0000 0000

31	30	29	28	27	26	25	24	23	22	21	20	19	18	17	16
Res.	Res.	Res.	Res.	Res.	Res.	Res.	Res.	MMS2[3:0]				Res.	OIS6	Res.	OIS5
								rw	rw	rw	rw		rw		rw

15	14	13	12	11	10	9	8	7	6	5	4	3	2	1	0
Res.	OIS4	OIS3N	OIS3	OIS2N	OIS2	OIS1N	OIS1	TI1S	MMS[2:0]			CCDS	CCUS	Res.	CCPC
	rw	rw	rw	rw	rw	rw	rw	rw	rw	rw	rw	rw	rw		rw

Bits 31:24 Reserved, must be kept at reset value.

Bits 23:20 **MMS2[3:0]**: Master mode selection 2

These bits allow the information to be sent to ADC for synchronization (TRGO2) to be selected. The combination is as follows:

0000: **Reset** - the UG bit from the TIMx_EGR register is used as trigger output (TRGO2). If the reset is generated by the trigger input (slave mode controller configured in reset mode), the signal on TRGO2 is delayed compared to the actual reset.

0001: **Enable** - the Counter Enable signal CNT_EN is used as trigger output (TRGO2). It is useful to start several timers at the same time or to control a window in which a slave timer is enabled. The Counter Enable signal is generated by a logic AND between the CEN control bit and the trigger input when configured in Gated mode. When the Counter Enable signal is controlled by the trigger input, there is a delay on TRGO2, except if the Master/Slave mode is selected (see the MSM bit description in TIMx_SMCR register).

0010: **Update** - the update event is selected as trigger output (TRGO2). For instance, a master timer can then be used as a prescaler for a slave timer.

0011: **Compare pulse** - the trigger output sends a positive pulse when the CC1IF flag is to be set (even if it was already high), as soon as a capture or compare match occurs (TRGO2).

0100: **Compare** - OC1REFC signal is used as trigger output (TRGO2)

0101: **Compare** - OC2REFC signal is used as trigger output (TRGO2)

0110: **Compare** - OC3REFC signal is used as trigger output (TRGO2)

0111: **Compare** - OC4REFC signal is used as trigger output (TRGO2)

1000: **Compare** - OC5REFC signal is used as trigger output (TRGO2)

1001: **Compare** - OC6REFC signal is used as trigger output (TRGO2)

1010: **Compare Pulse** - OC4REFC rising or falling edges generate pulses on TRGO2

1011: **Compare Pulse** - OC6REFC rising or falling edges generate pulses on TRGO2

1100: **Compare Pulse** - OC4REFC or OC6REFC rising edges generate pulses on TRGO2

1101: **Compare Pulse** - OC4REFC rising or OC6REFC falling edges generate pulses on TRGO2

1110: **Compare Pulse** - OC5REFC or OC6REFC rising edges generate pulses on TRGO2

1111: **Compare Pulse** - OC5REFC rising or OC6REFC falling edges generate pulses on TRGO2

Note: The clock of the slave timer or ADC must be enabled prior to receive events from the master timer, and must not be changed on-the-fly while triggers are received from the master timer.

Bit 19 Reserved, must be kept at reset value.

Bit 18 **OIS6**: Output Idle state 6 (OC6 output)

Refer to OIS1 bit

Bit 17 Reserved, must be kept at reset value.

Bit 16 **OIS5**: Output Idle state 5 (OC5 output)

Refer to OIS1 bit

Bit 15 Reserved, must be kept at reset value.

Bit 14 **OIS4**: Output Idle state 4 (OC4 output)

Refer to OIS1 bit

Bit 13 **OIS3N**: Output Idle state 3 (OC3N output)

Refer to OIS1N bit

Bit 12 **OIS3**: Output Idle state 3 (OC3 output)

Refer to OIS1 bit

Bit 11 **OIS2N**: Output Idle state 2 (OC2N output)
Refer to OIS1N bit

Bit 10 **OIS2**: Output Idle state 2 (OC2 output)
Refer to OIS1 bit

Bit 9 **OIS1N**: Output Idle state 1 (OC1N output)
0: OC1N=0 after a dead-time when MOE=0
1: OC1N=1 after a dead-time when MOE=0

Note: This bit can not be modified as long as LOCK level 1, 2 or 3 has been programmed (LOCK bits in TIMx_BDTR register).

Bit 8 **OIS1**: Output Idle state 1 (OC1 output)
0: OC1=0 (after a dead-time if OC1N is implemented) when MOE=0
1: OC1=1 (after a dead-time if OC1N is implemented) when MOE=0

Note: This bit can not be modified as long as LOCK level 1, 2 or 3 has been programmed (LOCK bits in TIMx_BDTR register).

Bit 7 **TI1S**: TI1 selection
0: The TIMx_CH1 pin is connected to TI1 input
1: The TIMx_CH1, CH2 and CH3 pins are connected to the TI1 input (XOR combination)

Bits 6:4 **MMS[2:0]**: Master mode selection
These bits allow selected information to be sent in master mode to slave timers for synchronization (TRGO). The combination is as follows:
000: **Reset** - the UG bit from the TIMx_EGR register is used as trigger output (TRGO). If the reset is generated by the trigger input (slave mode controller configured in reset mode) then the signal on TRGO is delayed compared to the actual reset.
001: **Enable** - the Counter Enable signal CNT_EN is used as trigger output (TRGO). It is useful to start several timers at the same time or to control a window in which a slave timer is enable. The Counter Enable signal is generated by a logic AND between CEN control bit and the trigger input when configured in gated mode. When the Counter Enable signal is controlled by the trigger input, there is a delay on TRGO, except if the master/slave mode is selected (see the MSM bit description in TIMx_SMCR register).
010: **Update** - The update event is selected as trigger output (TRGO). For instance a master timer can then be used as a prescaler for a slave timer.
011: **Compare Pulse** - The trigger output send a positive pulse when the CC1IF flag is to be set (even if it was already high), as soon as a capture or a compare match occurred. (TRGO).
100: **Compare** - OC1REFC signal is used as trigger output (TRGO)
101: **Compare** - OC2REFC signal is used as trigger output (TRGO)
110: **Compare** - OC3REFC signal is used as trigger output (TRGO)
111: **Compare** - OC4REFC signal is used as trigger output (TRGO)

Note: The clock of the slave timer or ADC must be enabled prior to receive events from the master timer, and must not be changed on-the-fly while triggers are received from the master timer.

Bit 3 **CCDS**: Capture/compare DMA selection
0: CCx DMA request sent when CCx event occurs
1: CCx DMA requests sent when update event occurs

Bit 2 **CCUS**: Capture/compare control update selection

0: When capture/compare control bits are preloaded (CCPC=1), they are updated by setting the COMG bit only

1: When capture/compare control bits are preloaded (CCPC=1), they are updated by setting the COMG bit or when an rising edge occurs on TRGI

Note: This bit acts only on channels that have a complementary output.

Bit 1 Reserved, must be kept at reset value.

Bit 0 **CCPC**: Capture/compare preloaded control

0: CCxE, CCxNE and OCxM bits are not preloaded

1: CCxE, CCxNE and OCxM bits are preloaded, after having been written, they are updated only when a commutation event (COM) occurs (COMG bit set or rising edge detected on TRGI, depending on the CCUS bit).

Note: This bit acts only on channels that have a complementary output.

21.4.3 TIM1 slave mode control register (TIM1_SMCR)

Address offset: 0x08

Reset value: 0x0000 0000

31	30	29	28	27	26	25	24	23	22	21	20	19	18	17	16
Res.	Res.	Res.	Res.	Res.	Res.	Res.	Res.	Res.	Res.	TS[4:3]		Res.	Res.	Res.	SMS[3]
										rw	rw				rw

15	14	13	12	11	10	9	8	7	6	5	4	3	2	1	0
ETP	ECE	ETPS[1:0]		ETF[3:0]				MSM	TS[2:0]			OCCS	SMS[2:0]		
rw	rw	rw	rw	rw	rw	rw	rw	rw	rw	rw	rw	rw	rw	rw	rw

Bits 31:22 Reserved, must be kept at reset value.

Bits 19:17 Reserved, must be kept at reset value.

Bit 15 **ETP**: External trigger polarity

This bit selects whether ETR or $\overline{ETR}$ is used for trigger operations

0: ETR is non-inverted, active at high level or rising edge.

1: ETR is inverted, active at low level or falling edge.

Bit 14 **ECE**: External clock enable

This bit enables External clock mode 2.

0: External clock mode 2 disabled

1: External clock mode 2 enabled. The counter is clocked by any active edge on the ETRF signal.

Note: Setting the ECE bit has the same effect as selecting external clock mode 1 with TRGI connected to ETRF (SMS=111 and TS=00111).

It is possible to simultaneously use external clock mode 2 with the following slave modes: reset mode, gated mode and trigger mode. Nevertheless, TRGI must not be connected to ETRF in this case (TS bits must not be 00111).

If external clock mode 1 and external clock mode 2 are enabled at the same time, the external clock input is ETRF.

Bits 13:12 **ETPS[1:0]**: External trigger prescaler

External trigger signal ETRP frequency must be at most 1/4 of f_{CK_INT} frequency. A prescaler can be enabled to reduce ETRP frequency. It is useful when inputting fast external clocks.

00: Prescaler OFF
01: ETRP frequency divided by 2
10: ETRP frequency divided by 4
11: ETRP frequency divided by 8

Bits 11:8 **ETF[3:0]**: External trigger filter

This bit-field then defines the frequency used to sample ETRP signal and the length of the digital filter applied to ETRP. The digital filter is made of an event counter in which N consecutive events are needed to validate a transition on the output:

0000: No filter, sampling is done at f_{DTS}
0001: $f_{SAMPLING}=f_{CK_INT}$, N=2
0010: $f_{SAMPLING}=f_{CK_INT}$, N=4
0011: $f_{SAMPLING}=f_{CK_INT}$, N=8
0100: $f_{SAMPLING}=f_{DTS}/2$, N=6
0101: $f_{SAMPLING}=f_{DTS}/2$, N=8
0110: $f_{SAMPLING}=f_{DTS}/4$, N=6
0111: $f_{SAMPLING}=f_{DTS}/4$, N=8
1000: $f_{SAMPLING}=f_{DTS}/8$, N=6
1001: $f_{SAMPLING}=f_{DTS}/8$, N=8
1010: $f_{SAMPLING}=f_{DTS}/16$, N=5
1011: $f_{SAMPLING}=f_{DTS}/16$, N=6
1100: $f_{SAMPLING}=f_{DTS}/16$, N=8
1101: $f_{SAMPLING}=f_{DTS}/32$, N=5
1110: $f_{SAMPLING}=f_{DTS}/32$, N=6
1111: $f_{SAMPLING}=f_{DTS}/32$, N=8

Bit 7 **MSM:** Master/slave mode

0: No action
1: The effect of an event on the trigger input (TRGI) is delayed to allow a perfect synchronization between the current timer and its slaves (through TRGO). It is useful if we want to synchronize several timers on a single external event.

Bits 21, 20, 6, 5, 4 **TS[4:0]:** Trigger selection

This bit-field selects the trigger input to be used to synchronize the counter.

00000: Internal Trigger 0 (ITR0)
00001: Internal Trigger 1 (ITR1)
00010: Internal Trigger 2 (ITR2)
00011: Internal Trigger 3 (ITR3)
00100: TI1 Edge Detector (TI1F_ED)
00101: Filtered Timer Input 1 (TI1FP1)
00110: Filtered Timer Input 2 (TI2FP2)
00111: External Trigger input (ETRF)
Others: Reserved

See *Table 136: TIM1 internal trigger connection on page 588* for more details on ITRx meaning for each Timer.

Note: These bits must be changed only when they are not used (e.g. when SMS=000) to avoid wrong edge detections at the transition.

Bit 3 **OCCS:** OCREF clear selection

This bit is used to select the OCREF clear source.

0: OCREF_CLR_INT is connected to the OCREF_CLR input
1: OCREF_CLR_INT is connected to ETRF

Bits 16, 2, 1, 0 **SMS[3:0]:** Slave mode selection

When external signals are selected the active edge of the trigger signal (TRGI) is linked to the polarity selected on the external input (refer to ETP bit in TIMx_SMCR for tim_etr_in and CCxP/CCxNP bits in TIMx_CCER register for tim_ti1fp1 and tim_ti2fp2).

0000: Slave mode disabled - if CEN = '1' then the prescaler is clocked directly by the internal clock.

0001: Encoder mode 1 - Counter counts up/down on TI1FP1 edge depending on TI2FP2 level.

0010: Encoder mode 2 - Counter counts up/down on TI2FP2 edge depending on TI1FP1 level.

0011: Encoder mode 3 - Counter counts up/down on both TI1FP1 and TI2FP2 edges depending on the level of the other input.

0100: Reset Mode - Rising edge of the selected trigger input (TRGI) reinitializes the counter and generates an update of the registers.

0101: Gated Mode - The counter clock is enabled when the trigger input (TRGI) is high. The counter stops (but is not reset) as soon as the trigger becomes low. Both start and stop of the counter are controlled.

0110: Trigger Mode - The counter starts at a rising edge of the trigger TRGI (but it is not reset). Only the start of the counter is controlled.

0111: External Clock Mode 1 - Rising edges of the selected trigger (TRGI) clock the counter.

1000: Combined reset + trigger mode - Rising edge of the selected trigger input (TRGI) reinitializes the counter, generates an update of the registers and starts the counter.

Codes above 1000: Reserved.

Note: The gated mode must not be used if TI1F_ED is selected as the trigger input (TS=00100). Indeed, TI1F_ED outputs 1 pulse for each transition on TI1F, whereas the gated mode checks the level of the trigger signal.

Note: The clock of the slave peripherals (timer, ADC, ...) receiving the TRGO or the TRGO2 signals must be enabled prior to receive events from the master timer, and the clock frequency (prescaler) must not be changed on-the-fly while triggers are received from the master timer.

Table 136. TIM1 internal trigger connection

Slave TIM	ITR0 (TS = 00000)	ITR1 (TS = 00001)	ITR2 (TS = 00010)	ITR3 (TS = 00011)
TIM1	-	TIM2	-	-

21.4.4 TIM1 DMA/interrupt enable register (TIM1_DIER)

Address offset: 0x0C

Reset value: 0x0000

15	14	13	12	11	10	9	8	7	6	5	4	3	2	1	0
Res.	TDE	COMDE	CC4DE	CC3DE	CC2DE	CC1DE	UDE	BIE	TIE	COMIE	CC4IE	CC3IE	CC2IE	CC1IE	UIE
	rw	rw	rw	rw	rw	rw	rw	rw	rw	rw	rw	rw	rw	rw	rw

Bit 15 Reserved, must be kept at reset value.

Bit 14 **TDE**: Trigger DMA request enable

0: Trigger DMA request disabled

1: Trigger DMA request enabled

Bit 13 **COMDE**: COM DMA request enable
0: COM DMA request disabled
1: COM DMA request enabled

Bit 12 **CC4DE**: Capture/Compare 4 DMA request enable
0: CC4 DMA request disabled
1: CC4 DMA request enabled

Bit 11 **CC3DE**: Capture/Compare 3 DMA request enable
0: CC3 DMA request disabled
1: CC3 DMA request enabled

Bit 10 **CC2DE**: Capture/Compare 2 DMA request enable
0: CC2 DMA request disabled
1: CC2 DMA request enabled

Bit 9 **CC1DE**: Capture/Compare 1 DMA request enable
0: CC1 DMA request disabled
1: CC1 DMA request enabled

Bit 8 **UDE**: Update DMA request enable
0: Update DMA request disabled
1: Update DMA request enabled

Bit 7 **BIE**: Break interrupt enable
0: Break interrupt disabled
1: Break interrupt enabled

Bit 6 **TIE**: Trigger interrupt enable
0: Trigger interrupt disabled
1: Trigger interrupt enabled

Bit 5 **COMIE**: COM interrupt enable
0: COM interrupt disabled
1: COM interrupt enabled

Bit 4 **CC4IE**: Capture/Compare 4 interrupt enable
0: CC4 interrupt disabled
1: CC4 interrupt enabled

Bit 3 **CC3IE**: Capture/Compare 3 interrupt enable
0: CC3 interrupt disabled
1: CC3 interrupt enabled

Bit 2 **CC2IE**: Capture/Compare 2 interrupt enable
0: CC2 interrupt disabled
1: CC2 interrupt enabled

Bit 1 **CC1IE**: Capture/Compare 1 interrupt enable
0: CC1 interrupt disabled
1: CC1 interrupt enabled

Bit 0 **UIE**: Update interrupt enable
0: Update interrupt disabled
1: Update interrupt enabled

21.4.5 TIM1 status register (TIM1_SR)

Address offset: 0x10

Reset value: 0x0000 0000

31	30	29	28	27	26	25	24	23	22	21	20	19	18	17	16
Res.	Res.	Res.	Res.	Res.	Res.	Res.	Res.	Res.	Res.	Res.	Res.	Res.	Res.	CC6IF	CC5IF
														rc_w0	rc_w0

15	14	13	12	11	10	9	8	7	6	5	4	3	2	1	0
Res.	Res.	SBIF	CC4OF	CC3OF	CC2OF	CC1OF	B2IF	BIF	TIF	COMIF	CC4IF	CC3IF	CC2IF	CC1IF	UIF
		rc_w0	rc_w0	rc_w0	rc_w0	rc_w0	rc_w0	rc_w0	rc_w0	rc_w0	rc_w0	rc_w0	rc_w0	rc_w0	rc_w0

Bits 31:18 Reserved, must be kept at reset value.

Bit 17 **CC6IF**: Compare 6 interrupt flag

Refer to CC1IF description (Note: Channel 6 can only be configured as output)

Bit 16 **CC5IF**: Compare 5 interrupt flag

Refer to CC1IF description (Note: Channel 5 can only be configured as output)

Bits 15:14 Reserved, must be kept at reset value.

Bit 13 **SBIF**: System Break interrupt flag

This flag is set by hardware as soon as the system break input goes active. It can be cleared by software if the system break input is not active.

This flag must be reset to re-start PWM operation.

0: No break event occurred.

1: An active level has been detected on the system break input. An interrupt is generated if BIE=1 in the TIMx_DIER register.

Bit 12 **CC4OF**: Capture/Compare 4 overcapture flag

Refer to CC1OF description

Bit 11 **CC3OF**: Capture/Compare 3 overcapture flag

Refer to CC1OF description

Bit 10 **CC2OF**: Capture/Compare 2 overcapture flag

Refer to CC1OF description

Bit 9 **CC1OF**: Capture/Compare 1 overcapture flag

This flag is set by hardware only when the corresponding channel is configured in input capture mode. It is cleared by software by writing it to ‘0’.

0: No overcapture has been detected.

1: The counter value has been captured in TIMx_CCR1 register while CC1IF flag was already set

Bit 8 **B2IF**: Break 2 interrupt flag

This flag is set by hardware as soon as the break 2 input goes active. It can be cleared by software if the break 2 input is not active.

0: No break event occurred.

1: An active level has been detected on the break 2 input. An interrupt is generated if BIE=1 in the TIMx_DIER register.

Bit 7 **BIF**: Break interrupt flag

This flag is set by hardware as soon as the break input goes active. It can be cleared by software if the break input is not active.

0: No break event occurred.

1: An active level has been detected on the break input. An interrupt is generated if BIE=1 in the TIMx_DIER register.

Bit 6 **TIF**: Trigger interrupt flag

This flag is set by hardware on the TRG trigger event (active edge detected on TRGI input when the slave mode controller is enabled in all modes but gated mode. It is set when the counter starts or stops when gated mode is selected. It is cleared by software.

0: No trigger event occurred.

1: Trigger interrupt pending.

Bit 5 **COMIF**: COM interrupt flag

This flag is set by hardware on COM event (when Capture/compare Control bits - CCxE, CCxNE, OCxM - have been updated). It is cleared by software.

0: No COM event occurred.

1: COM interrupt pending.

Bit 4 **CC4IF**: Capture/Compare 4 interrupt flag

Refer to CC1IF description

Bit 3 **CC3IF**: Capture/Compare 3 interrupt flag

Refer to CC1IF description

Bit 2 **CC2IF**: Capture/Compare 2 interrupt flag

Refer to CC1IF description

Bit 1 **CC1IF**: Capture/Compare 1 interrupt flag

This flag is set by hardware. It is cleared by software (input capture or output compare mode) or by reading the TIMx_CCR1 register (input capture mode only).

0: No compare match / No input capture occurred

1: A compare match or an input capture occurred.

If channel CC1 is configured as output: this flag is set when the content of the counter TIMx_CNT matches the content of the TIMx_CCR1 register. When the content of TIMx_CCR1 is greater than the content of TIMx_ARR, the CC1IF bit goes high on the counter overflow (in up-counting and up/down-counting modes) or underflow (in down-counting mode). There are 3 possible options for flag setting in center-aligned mode, refer to the CMS bits in the TIMx_CR1 register for the full description.

If channel CC1 is configured as input: this bit is set when counter value has been captured in TIMx_CCR1 register (an edge has been detected on IC1, as per the edge sensitivity defined with the CC1P and CC1NP bits setting, in TIMx_CCER).

Bit 0 **UIF**: Update interrupt flag

This bit is set by hardware on an update event. It is cleared by software.

0: No update occurred.

1: Update interrupt pending. This bit is set by hardware when the registers are updated:

– At overflow or underflow regarding the repetition counter value (update if repetition counter = 0) and if the UDIS=0 in the TIMx_CR1 register.

– When CNT is reinitialized by software using the UG bit in TIMx_EGR register, if URS=0 and UDIS=0 in the TIMx_CR1 register.

– When CNT is reinitialized by a trigger event (refer to *Section 21.4.3: TIM1 slave mode control register (TIM1_SMCR)*), if URS=0 and UDIS=0 in the TIMx_CR1 register.

21.4.6 TIM1 event generation register (TIM1_EGR)

Address offset: 0x14

Reset value: 0x0000

15	14	13	12	11	10	9	8	7	6	5	4	3	2	1	0
Res.	Res.	Res.	Res.	Res.	Res.	Res.	B2G	BG	TG	COMG	CC4G	CC3G	CC2G	CC1G	UG
							w	w	w	w	w	w	w	w	w

Bits 15:9 Reserved, must be kept at reset value.

Bit 8 **B2G**: Break 2 generation

This bit is set by software in order to generate an event, it is automatically cleared by hardware.

0: No action

1: A break 2 event is generated. MOE bit is cleared and B2IF flag is set. Related interrupt can occur if enabled.

Bit 7 **BG**: Break generation

This bit is set by software in order to generate an event, it is automatically cleared by hardware.

0: No action

1: A break event is generated. MOE bit is cleared and BIF flag is set. Related interrupt or DMA transfer can occur if enabled.

Bit 6 **TG**: Trigger generation

This bit is set by software in order to generate an event, it is automatically cleared by hardware.

0: No action

1: The TIF flag is set in TIMx_SR register. Related interrupt or DMA transfer can occur if enabled.

Bit 5 **COMG**: Capture/Compare control update generation

This bit can be set by software, it is automatically cleared by hardware

0: No action

1: When CCPC bit is set, it allows CCxE, CCxNE and OCxM bits to be updated.

Note: This bit acts only on channels having a complementary output.

Bit 4 **CC4G**: Capture/Compare 4 generation

Refer to CC1G description

Bit 3 **CC3G**: Capture/Compare 3 generation

Refer to CC1G description

Bit 2 **CC2G**: Capture/Compare 2 generation

Refer to CC1G description

Bit 1 **CC1G**: Capture/Compare 1 generation

This bit is set by software in order to generate an event, it is automatically cleared by hardware.

0: No action

1: A capture/compare event is generated on channel 1:

If channel CC1 is configured as output:

CC1IF flag is set, Corresponding interrupt or DMA request is sent if enabled.

If channel CC1 is configured as input:

The current value of the counter is captured in TIMx_CCR1 register. The CC1IF flag is set, the corresponding interrupt or DMA request is sent if enabled. The CC1OF flag is set if the CC1IF flag was already high.

Bit 0 **UG**: Update generation

This bit can be set by software, it is automatically cleared by hardware.

0: No action

1: Reinitialize the counter and generates an update of the registers. The prescaler internal counter is also cleared (the prescaler ratio is not affected). The counter is cleared if the center-aligned mode is selected or if DIR=0 (upcounting), else it takes the auto-reload value (TIMx_ARR) if DIR=1 (downcounting).

21.4.7 TIM1 capture/compare mode register 1 (TIM1_CCMR1)

Address offset: 0x18

Reset value: 0x0000 0000

The same register can be used for input capture mode (this section) or for output compare mode (next section). The direction of a channel is defined by configuring the corresponding CCxS bits. All the other bits of this register have a different function for input capture and for output compare modes. It is possible to combine both modes independently (e.g. channel 1 in input capture mode and channel 2 in output compare mode).

Input capture mode:

31	30	29	28	27	26	25	24	23	22	21	20	19	18	17	16
Res.	Res.	Res.	Res.	Res.	Res.	Res.	Res.	Res.	Res.	Res.	Res.	Res.	Res.	Res.	Res.

15	14	13	12	11	10	9	8	7	6	5	4	3	2	1	0
IC2F[3:0]				IC2PSC[1:0]		CC2S[1:0]		IC1F[3:0]				IC1PSC[1:0]		CC1S[1:0]	
rw	rw	rw	rw	rw	rw	rw	rw	rw	rw	rw	rw	rw	rw	rw	rw

Bits 31:16 Reserved, must be kept at reset value.

Bits 15:12 **IC2F[3:0]**: Input capture 2 filter

Refer to IC1F[3:0] description.

Bits 11:10 **IC2PSC[1:0]**: Input capture 2 prescaler

Refer to IC1PSC[1:0] description.

Bits 9:8 **CC2S[1:0]**: Capture/Compare 2 selection

This bit-field defines the direction of the channel (input/output) as well as the used input.

00: CC2 channel is configured as output

01: CC2 channel is configured as input, IC2 is mapped on TI2

10: CC2 channel is configured as input, IC2 is mapped on TI1

11: CC2 channel is configured as input, IC2 is mapped on TRC. This mode is working only if an internal trigger input is selected through TS bit (TIMx_SMCR register)

Note: CC2S bits are writable only when the channel is OFF (CC2E = '0' in TIMx_CCER).

Bits 7:4 **IC1F[3:0]**: Input capture 1 filter

This bit-field defines the frequency used to sample TI1 input and the length of the digital filter applied to TI1. The digital filter is made of an event counter in which N consecutive events are needed to validate a transition on the output:

0000: No filter, sampling is done at f_{DTS}

0001: $f_{SAMPLING}=f_{CK_INT}$, N=2

0010: $f_{SAMPLING}=f_{CK_INT}$, N=4

0011: $f_{SAMPLING}=f_{CK_INT}$, N=8

0100: $f_{SAMPLING}=f_{DTS}/2$, N=6

0101: $f_{SAMPLING}=f_{DTS}/2$, N=8

0110: $f_{SAMPLING}=f_{DTS}/4$, N=6

0111: $f_{SAMPLING}=f_{DTS}/4$, N=8

1000: $f_{SAMPLING}=f_{DTS}/8$, N=6

1001: $f_{SAMPLING}=f_{DTS}/8$, N=8

1010: $f_{SAMPLING}=f_{DTS}/16$, N=5

1011: $f_{SAMPLING}=f_{DTS}/16$, N=6

1100: $f_{SAMPLING}=f_{DTS}/16$, N=8

1101: $f_{SAMPLING}=f_{DTS}/32$, N=5

1110: $f_{SAMPLING}=f_{DTS}/32$, N=6

1111: $f_{SAMPLING}=f_{DTS}/32$, N=8

Bits 3:2 **IC1PSC[1:0]**: Input capture 1 prescaler

This bit-field defines the ratio of the prescaler acting on CC1 input (IC1). The prescaler is reset as soon as CC1E='0' (TIMx_CCER register).

00: no prescaler, capture is done each time an edge is detected on the capture input

01: capture is done once every 2 events

10: capture is done once every 4 events

11: capture is done once every 8 events

Bits 1:0 **CC1S[1:0]**: Capture/Compare 1 Selection

This bit-field defines the direction of the channel (input/output) as well as the used input.

00: CC1 channel is configured as output

01: CC1 channel is configured as input, IC1 is mapped on TI1

10: CC1 channel is configured as input, IC1 is mapped on TI2

11: CC1 channel is configured as input, IC1 is mapped on TRC. This mode is working only if an internal trigger input is selected through TS bit (TIMx_SMCR register)

Note: CC1S bits are writable only when the channel is OFF (CC1E = '0' in TIMx_CCER).

21.4.8 TIM1 capture/compare mode register 1 [alternate] (TIM1_CCMR1)

Address offset: 0x18

Reset value: 0x0000 0000

The same register can be used for output compare mode (this section) or for input capture mode (previous section). The direction of a channel is defined by configuring the

corresponding CCxS bits. All the other bits of this register have a different function for input capture and for output compare modes. It is possible to combine both modes independently (e.g. channel 1 in input capture mode and channel 2 in output compare mode).

Output compare mode:

31	30	29	28	27	26	25	24	23	22	21	20	19	18	17	16
Res.	Res.	Res.	Res.	Res.	Res.	Res.	OC2M[3]	Res.	Res.	Res.	Res.	Res.	Res.	Res.	OC1M[3]
							rw								rw

15	14	13	12	11	10	9	8	7	6	5	4	3	2	1	0
OC2 CE	OC2M[2:0]			OC2 PE	OC2 FE	CC2S[1:0]		OC1 CE	OC1M[2:0]			OC1 PE	OC1 FE	CC1S[1:0]	
rw	rw	rw	rw	rw	rw	rw	rw	rw	rw	rw	rw	rw	rw	rw	rw

Bits 31:25 Reserved, must be kept at reset value.

Bits 23:17 Reserved, must be kept at reset value.

Bit 15 **OC2CE:** Output Compare 2 clear enable
Refer to OC1CE description.

Bits 24, 14:12 **OC2M[3:0]**: Output Compare 2 mode
Refer to OC1M[3:0] description.

Bit 11 **OC2PE**: Output Compare 2 preload enable
Refer to OC1PE description.

Bit 10 **OC2FE**: Output Compare 2 fast enable
Refer to OC1FE description.

Bits 9:8 **CC2S[1:0]**: Capture/Compare 2 selection
This bit-field defines the direction of the channel (input/output) as well as the used input.
00: CC2 channel is configured as output
01: CC2 channel is configured as input, IC2 is mapped on TI2
10: CC2 channel is configured as input, IC2 is mapped on TI1
11: CC2 channel is configured as input, IC2 is mapped on TRC. This mode is working only if an internal trigger input is selected through the TS bit (TIMx_SMCR register)

Note: CC2S bits are writable only when the channel is OFF (CC2E = '0' in TIMx_CCER).

Bit 7 **OC1CE:** Output Compare 1 clear enable
0: OC1Ref is not affected by the ocref_clr_int signal
1: OC1Ref is cleared as soon as a High level is detected on ocref_clr_int signal (OCREF_CLR input or ETRF input)

Bits 16, 6:4 **OC1M[3:0]**: Output Compare 1 mode

These bits define the behavior of the output reference signal OC1REF from which OC1 and OC1N are derived. OC1REF is active high whereas OC1 and OC1N active level depends on CC1P and CC1NP bits.

0000: Frozen - The comparison between the output compare register TIMx_CCR1 and the counter TIMx_CNT has no effect on the outputs. This mode can be used when the timer serves as a software timebase. When the frozen mode is enabled during timer operation, the output keeps the state (active or inactive) it had before entering the frozen state.

0001: Set channel 1 to active level on match. OC1REF signal is forced high when the counter TIMx_CNT matches the capture/compare register 1 (TIMx_CCR1).

0010: Set channel 1 to inactive level on match. OC1REF signal is forced low when the counter TIMx_CNT matches the capture/compare register 1 (TIMx_CCR1).

0011: Toggle - OC1REF toggles when TIMx_CNT=TIMx_CCR1.

0100: Force inactive level - OC1REF is forced low.

0101: Force active level - OC1REF is forced high.

0110: PWM mode 1 - In upcounting, channel 1 is active as long as TIMx_CNT<TIMx_CCR1 else inactive. In downcounting, channel 1 is inactive (OC1REF=‘0’) as long as TIMx_CNT>TIMx_CCR1 else active (OC1REF=’1’).

0111: PWM mode 2 - In upcounting, channel 1 is inactive as long as TIMx_CNT<TIMx_CCR1 else active. In downcounting, channel 1 is active as long as TIMx_CNT>TIMx_CCR1 else inactive.

1000: Retriggerable OPM mode 1 - In up-counting mode, the channel is active until a trigger event is detected (on TRGI signal). Then, a comparison is performed as in PWM mode 1 and the channels becomes active again at the next update. In down-counting mode, the channel is inactive until a trigger event is detected (on TRGI signal). Then, a comparison is performed as in PWM mode 1 and the channels becomes inactive again at the next update.

1001: Retriggerable OPM mode 2 - In up-counting mode, the channel is inactive until a trigger event is detected (on TRGI signal). Then, a comparison is performed as in PWM mode 2 and the channels becomes inactive again at the next update. In down-counting mode, the channel is active until a trigger event is detected (on TRGI signal). Then, a comparison is performed as in PWM mode 1 and the channels becomes active again at the next update.

1010: Reserved,

1011: Reserved,

1100: Combined PWM mode 1 - OC1REF has the same behavior as in PWM mode 1. OC1REFC is the logical OR between OC1REF and OC2REF.

1101: Combined PWM mode 2 - OC1REF has the same behavior as in PWM mode 2. OC1REFC is the logical AND between OC1REF and OC2REF.

1110: Asymmetric PWM mode 1 - OC1REF has the same behavior as in PWM mode 1. OC1REFC outputs OC1REF when the counter is counting up, OC2REF when it is counting down.

1111: Asymmetric PWM mode 2 - OC1REF has the same behavior as in PWM mode 2. OC1REFC outputs OC1REF when the counter is counting up, OC2REF when it is counting down.

Note: These bits can not be modified as long as LOCK level 3 has been programmed (LOCK bits in TIMx_BDTR register) and CC1S=’00’ (the channel is configured in output).

Note: In PWM mode, the OCREF level changes only when the result of the comparison changes or when the output compare mode switches from “frozen” mode to “PWM” mode.

Note: On channels having a complementary output, this bit field is preloaded. If the CCPC bit is set in the TIMx_CR2 register then the OC1M active bits take the new value from the preloaded bits only when a COM event is generated.

Note: The OC1M[3] bit is not contiguous, located in bit 16.

Bit 3 **OC1PE**: Output Compare 1 preload enable

0: Preload register on TIMx_CCR1 disabled. TIMx_CCR1 can be written at anytime, the new value is taken in account immediately.

1: Preload register on TIMx_CCR1 enabled. Read/Write operations access the preload register. TIMx_CCR1 preload value is loaded in the active register at each update event.

Note: These bits can not be modified as long as LOCK level 3 has been programmed (LOCK bits in TIMx_BDTR register) and CC1S='00' (the channel is configured in output).

Bit 2 **OC1FE**: Output Compare 1 fast enable

This bit decreases the latency between a trigger event and a transition on the timer output. It must be used in one-pulse mode (OPM bit set in TIMx_CR1 register), to have the output pulse starting as soon as possible after the starting trigger.

0: CC1 behaves normally depending on counter and CCR1 values even when the trigger is ON. The minimum delay to activate CC1 output when an edge occurs on the trigger input is 5 clock cycles.

1: An active edge on the trigger input acts like a compare match on CC1 output. Then, OC is set to the compare level independently from the result of the comparison. Delay to sample the trigger input and to activate CC1 output is reduced to 3 clock cycles. OCFE acts only if the channel is configured in PWM1 or PWM2 mode.

Bits 1:0 **CC1S[1:0]**: Capture/Compare 1 selection

This bit-field defines the direction of the channel (input/output) as well as the used input.

00: CC1 channel is configured as output

01: CC1 channel is configured as input, IC1 is mapped on TI1

10: CC1 channel is configured as input, IC1 is mapped on TI2

11: CC1 channel is configured as input, IC1 is mapped on TRC. This mode is working only if an internal trigger input is selected through TS bit (TIMx_SMCR register)

Note: CC1S bits are writable only when the channel is OFF (CC1E = '0' in TIMx_CCER).

21.4.9 TIM1 capture/compare mode register 2 (TIM1_CCMR2)

Address offset: 0x1C

Reset value: 0x0000 0000

The same register can be used for input capture mode (this section) or for output compare mode (next section). The direction of a channel is defined by configuring the corresponding CCxS bits. All the other bits of this register have a different function for input capture and for output compare modes. It is possible to combine both modes independently (e.g. channel 1 in input capture mode and channel 2 in output compare mode).

Input capture mode:

31	30	29	28	27	26	25	24	23	22	21	20	19	18	17	16
Res.	Res.	Res.	Res.	Res.	Res.	Res.	Res.	Res.	Res.	Res.	Res.	Res.	Res.	Res.	Res.

15	14	13	12	11	10	9	8	7	6	5	4	3	2	1	0
IC4F[3:0]				IC4PSC[1:0]		CC4S[1:0]		IC3F[3:0]				IC3PSC[1:0]		CC3S[1:0]	
rw	rw	rw	rw	rw	rw	rw	rw	rw	rw	rw	rw	rw	rw	rw	rw

Bits 31:16 Reserved, must be kept at reset value.

Bits 15:12 **IC4F[3:0]**: Input capture 4 filter

Refer to IC1F[3:0] description.

Bits 11:10 **IC4PSC[1:0]**: Input capture 4 prescaler
Refer to IC1PSC[1:0] description.

Bits 9:8 **CC4S[1:0]**: Capture/Compare 4 selection
This bit-field defines the direction of the channel (input/output) as well as the used input.
00: CC4 channel is configured as output
01: CC4 channel is configured as input, IC4 is mapped on TI4
10: CC4 channel is configured as input, IC4 is mapped on TI3
11: CC4 channel is configured as input, IC4 is mapped on TRC. This mode is working only if an internal trigger input is selected through TS bit (TIMx_SMCR register)

Note: CC4S bits are writable only when the channel is OFF (CC4E = '0' in TIMx_CCER).

Bits 7:4 **IC3F[3:0]**: Input capture 3 filter
Refer to IC1F[3:0] description.

Bits 3:2 **IC3PSC[1:0]**: Input capture 3 prescaler
Refer to IC1PSC[1:0] description.

Bits 1:0 **CC3S[1:0]**: Capture/compare 3 selection
This bit-field defines the direction of the channel (input/output) as well as the used input.
00: CC3 channel is configured as output
01: CC3 channel is configured as input, IC3 is mapped on TI3
10: CC3 channel is configured as input, IC3 is mapped on TI4
11: CC3 channel is configured as input, IC3 is mapped on TRC. This mode is working only if an internal trigger input is selected through TS bit (TIMx_SMCR register)

Note: CC3S bits are writable only when the channel is OFF (CC3E = '0' in TIMx_CCER).

21.4.10 TIM1 capture/compare mode register 2 [alternate] (TIM1_CCMR2)

Address offset: 0x1C

Reset value: 0x0000 0000

The same register can be used for output compare mode (this section) or for input capture mode (previous section). The direction of a channel is defined by configuring the corresponding CCxS bits. All the other bits of this register have a different function for input capture and for output compare modes. It is possible to combine both modes independently (e.g. channel 1 in input capture mode and channel 2 in output compare mode).

Output compare mode

31	30	29	28	27	26	25	24	23	22	21	20	19	18	17	16
Res.	Res.	Res.	Res.	Res.	Res.	Res.	OC4M[3]	Res.	Res.	Res.	Res.	Res.	Res.	Res.	OC3M[3]
							rw								rw

15	14	13	12	11	10	9	8	7	6	5	4	3	2	1	0
OC4 CE	OC4M[2:0]			OC4 PE	OC4 FE	CC4S[1:0]		OC3 CE	OC3M[2:0]			OC3 PE	OC3 FE	CC3S[1:0]	
rw	rw	rw	rw	rw	rw	rw	rw	rw	rw	rw	rw	rw	rw	rw	rw

Bits 31:25 Reserved, must be kept at reset value.

Bits 23:17 Reserved, must be kept at reset value.

Bit 15 **OC4CE**: Output compare 4 clear enable
Refer to OC1CE description.

Bits 24, 14:12 **OC4M[3:0]**: Output compare 4 mode
Refer to OC3M[3:0] description.

Bit 11 **OC4PE**: Output compare 4 preload enable
Refer to OC1PE description.

Bit 10 **OC4FE**: Output compare 4 fast enable
Refer to OC1FE description.

Bits 9:8 **CC4S[1:0]**: Capture/Compare 4 selection
This bit-field defines the direction of the channel (input/output) as well as the used input.
00: CC4 channel is configured as output
01: CC4 channel is configured as input, IC4 is mapped on TI4
10: CC4 channel is configured as input, IC4 is mapped on TI3
11: CC4 channel is configured as input, IC4 is mapped on TRC. This mode is working only if an internal trigger input is selected through TS bit (TIMx_SMCR register)
Note: CC4S bits are writable only when the channel is OFF (CC4E = '0' in TIMx_CCER).

Bit 7 **OC3CE:** Output compare 3 clear enable
Refer to OC1CE description.

Bits 16, 6:4 **OC3M[3:0]**: Output compare 3 mode
Refer to OC1M[3:0] description.

Bit 3 **OC3PE**: Output compare 3 preload enable
Refer to OC1PE description.

Bit 2 **OC3FE**: Output compare 3 fast enable
Refer to OC1FE description.

Bits 1:0 **CC3S[1:0]**: Capture/Compare 3 selection
This bit-field defines the direction of the channel (input/output) as well as the used input.
00: CC3 channel is configured as output
01: CC3 channel is configured as input, IC3 is mapped on TI3
10: CC3 channel is configured as input, IC3 is mapped on TI4
11: CC3 channel is configured as input, IC3 is mapped on TRC. This mode is working only if an internal trigger input is selected through TS bit (TIMx_SMCR register)
Note: CC3S bits are writable only when the channel is OFF (CC3E = '0' in TIMx_CCER).

21.4.11 TIM1 capture/compare enable register (TIM1_CCER)

Address offset: 0x20

Reset value: 0x0000 0000

31	30	29	28	27	26	25	24	23	22	21	20	19	18	17	16
Res.	Res.	Res.	Res.	Res.	Res.	Res.	Res.	Res.	Res.	CC6P	CC6E	Res.	Res.	CC5P	CC5E
										rw	rw			rw	rw
15	14	13	12	11	10	9	8	7	6	5	4	3	2	1	0
CC4NP	Res.	CC4P	CC4E	CC3NP	CC3NE	CC3P	CC3E	CC2NP	CC2NE	CC2P	CC2E	CC1NP	CC1NE	CC1P	CC1E
rw		rw	rw	rw	rw	rw	rw	rw	rw	rw	rw	rw	rw	rw	rw

Bits 31:22 Reserved, must be kept at reset value.

Bit 21 **CC6P**: Capture/Compare 6 output polarity
Refer to CC1P description

Bit 20 **CC6E**: Capture/Compare 6 output enable
Refer to CC1E description

Bits 19:18 Reserved, must be kept at reset value.

Bit 17 **CC5P**: Capture/Compare 5 output polarity
Refer to CC1P description

Bit 16 **CC5E**: Capture/Compare 5 output enable
Refer to CC1E description

Bit 15 **CC4NP**: Capture/Compare 4 complementary output polarity
Refer to CC1NP description

Bit 14 Reserved, must be kept at reset value.

Bit 13 **CC4P**: Capture/Compare 4 output polarity
Refer to CC1P description

Bit 12 **CC4E**: Capture/Compare 4 output enable
Refer to CC1E description

Bit 11 **CC3NP**: Capture/Compare 3 complementary output polarity
Refer to CC1NP description

Bit 10 **CC3NE**: Capture/Compare 3 complementary output enable
Refer to CC1NE description

Bit 9 **CC3P**: Capture/Compare 3 output polarity
Refer to CC1P description

Bit 8 **CC3E**: Capture/Compare 3 output enable
Refer to CC1E description

Bit 7 **CC2NP**: Capture/Compare 2 complementary output polarity
Refer to CC1NP description

Bit 6 **CC2NE**: Capture/Compare 2 complementary output enable
Refer to CC1NE description

Bit 5 **CC2P**: Capture/Compare 2 output polarity
Refer to CC1P description

Bit 4 **CC2E**: Capture/Compare 2 output enable
Refer to CC1E description

Bit 3 **CC1NP**: Capture/Compare 1 complementary output polarity

CC1 channel configured as output:

0: OC1N active high.

1: OC1N active low.

CC1 channel configured as input:

This bit is used in conjunction with CC1P to define the polarity of TI1FP1 and TI2FP1. Refer to CC1P description.

Note: This bit is not writable as soon as LOCK level 2 or 3 has been programmed (LOCK bits in TIMx_BDTR register) and CC1S="00" (channel configured as output).

On channels having a complementary output, this bit is preloaded. If the CCPC bit is set in the TIMx_CR2 register then the CC1NP active bit takes the new value from the preloaded bit only when a Commutation event is generated.

Bit 2 **CC1NE**: Capture/Compare 1 complementary output enable

0: Off - OC1N is not active. OC1N level is then function of MOE, OSSI, OSSR, OIS1, OIS1N and CC1E bits.

1: On - OC1N signal is output on the corresponding output pin depending on MOE, OSSI, OSSR, OIS1, OIS1N and CC1E bits.

On channels having a complementary output, this bit is preloaded. If the CCPC bit is set in the TIMx_CR2 register then the CC1NE active bit takes the new value from the preloaded bit only when a Commutation event is generated.

Bit 1 **CC1P**: Capture/Compare 1 output polarity

0: OC1 active high (output mode) / Edge sensitivity selection (input mode, see below)

1: OC1 active low (output mode) / Edge sensitivity selection (input mode, see below)

When CC1 channel is configured as input, both CC1NP/CC1P bits select the active polarity of TI1FP1 and TI2FP1 for trigger or capture operations.

CC1NP=0, CC1P=0: non-inverted/rising edge. The circuit is sensitive to TIxFP1 rising edge (capture or trigger operations in reset, external clock or trigger mode), TIxFP1 is not inverted (trigger operation in gated mode or encoder mode).

CC1NP=0, CC1P=1: inverted/falling edge. The circuit is sensitive to TIxFP1 falling edge (capture or trigger operations in reset, external clock or trigger mode), TIxFP1 is inverted (trigger operation in gated mode or encoder mode).

CC1NP=1, CC1P=1: non-inverted/both edges/ The circuit is sensitive to both TIxFP1 rising and falling edges (capture or trigger operations in reset, external clock or trigger mode), TIxFP1is not inverted (trigger operation in gated mode). This configuration must not be used in encoder mode.

CC1NP=1, CC1P=0: The configuration is reserved, it must not be used.

Note: This bit is not writable as soon as LOCK level 2 or 3 has been programmed (LOCK bits in TIMx_BDTR register).

On channels having a complementary output, this bit is preloaded. If the CCPC bit is set in the TIMx_CR2 register then the CC1P active bit takes the new value from the preloaded bit only when a Commutation event is generated.

Bit 0 **CC1E**: Capture/Compare 1 output enable

0: Capture mode disabled / OC1 is not active (see below)

1: Capture mode enabled / OC1 signal is output on the corresponding output pin

When CC1 channel is configured as output, the OC1 level depends on MOE, OSSI, OSSR, OIS1, OIS1N and CC1NE bits, regardless of the CC1E bits state. Refer to *Table 137* for details.

Note: On channels having a complementary output, this bit is preloaded. If the CCPC bit is set in the TIMx_CR2 register then the CC1E active bit takes the new value from the preloaded bit only when a Commutation event is generated.

Table 137. Output control bits for complementary OCx and OCxN channels with break feature

Control bits					Output states[1]	
MOE bit	OSSI bit	OSSR bit	CCxE bit	CCxNE bit	OCx output state	OCxN output state
1	X	X	0	0	Output disabled (not driven by the timer: Hi-Z) OCx=0, OCxN=0	
		0	0	1	Output disabled (not driven by the timer: Hi-Z) OCx=0	OCxREF + Polarity OCxN = OCxREF xor CCxNP
		0	1	0	OCxREF + Polarity OCx=OCxREF xor CCxP	Output Disabled (not driven by the timer: Hi-Z) OCxN=0
		X	1	1	OCREF + Polarity + dead-time	Complementary to OCREF (not OCREF) + Polarity + dead-time
		1	0	1	Off-State (output enabled with inactive state) OCx=CCxP	OCxREF + Polarity OCxN = OCxREF x or CCxNP
		1	1	0	OCxREF + Polarity OCx=OCxREF xor CCxP	Off-State (output enabled with inactive state) OCxN=CCxNP
0	0	X	X	X	Output disabled (not driven by the timer: Hi-Z).	
	1		0	0		
			0	1	Off-State (output enabled with inactive state) Asynchronously: OCx=CCxP, OCxN=CCxNP (if BRK or BRK2 is triggered). Then (this is valid only if BRK is triggered), if the clock is present: OCx=OISx and OCxN=OISxN after a dead-time, assuming that OISx and OISxN do not correspond to OCX and OCxN both in active state (may cause a short circuit when driving switches in half-bridge configuration). **Note**: BRK2 can only be used if OSSI = OSSR = 1.	
			1	0		
			1	1		

1. When both outputs of a channel are not used (control taken over by GPIO), the OISx, OISxN, CCxP and CCxNP bits must be kept cleared.

Note: The state of the external I/O pins connected to the complementary OCx and OCxN channels depends on the OCx and OCxN channel state and the GPIO registers.

21.4.12 TIM1 counter (TIM1_CNT)

Address offset: 0x24

Reset value: 0x0000 0000

31	30	29	28	27	26	25	24	23	22	21	20	19	18	17	16
UIF CPY	Res.	Res.	Res.	Res.	Res.	Res.	Res.	Res.	Res.	Res.	Res.	Res.	Res.	Res.	Res.
r															

15	14	13	12	11	10	9	8	7	6	5	4	3	2	1	0
CNT[15:0]															
rw	rw	rw	rw	rw	rw	rw	rw	rw	rw	rw	rw	rw	rw	rw	rw

Bit 31 **UIFCPY**: UIF copy

This bit is a read-only copy of the UIF bit of the TIMx_ISR register. If the UIFREMAP bit in the TIMxCR1 is reset, bit 31 is reserved and read at 0.

Bits 30:16 Reserved, must be kept at reset value.

Bits 15:0 **CNT[15:0]**: Counter value

21.4.13 TIM1 prescaler (TIM1_PSC)

Address offset: 0x28

Reset value: 0x0000

15	14	13	12	11	10	9	8	7	6	5	4	3	2	1	0
PSC[15:0]															
rw	rw	rw	rw	rw	rw	rw	rw	rw	rw	rw	rw	rw	rw	rw	rw

Bits 15:0 **PSC[15:0]**: Prescaler value

The counter clock frequency (CK_CNT) is equal to f_{CK_PSC} / (PSC[15:0] + 1).

PSC contains the value to be loaded in the active prescaler register at each update event (including when the counter is cleared through UG bit of TIMx_EGR register or through trigger controller when configured in “reset mode”).

21.4.14 TIM1 auto-reload register (TIM1_ARR)

Address offset: 0x2C

Reset value: 0xFFFF

15	14	13	12	11	10	9	8	7	6	5	4	3	2	1	0
ARR[15:0]															
rw	rw	rw	rw	rw	rw	rw	rw	rw	rw	rw	rw	rw	rw	rw	rw

Bits 15:0 **ARR[15:0]**: Auto-reload value

ARR is the value to be loaded in the actual auto-reload register.

Refer to the *Section 21.3.1: Time-base unit on page 524* for more details about ARR update and behavior.

The counter is blocked while the auto-reload value is null.

21.4.15 TIM1 repetition counter register (TIM1_RCR)

Address offset: 0x30

Reset value: 0x0000

15	14	13	12	11	10	9	8	7	6	5	4	3	2	1	0
REP[15:0]															
rw	rw	rw	rw	rw	rw	rw	rw	rw	rw	rw	rw	rw	rw	rw	rw

Bits 15:0 **REP[15:0]**: Repetition counter value

These bits allow the user to set-up the update rate of the compare registers (i.e. periodic transfers from preload to active registers) when preload registers are enable, as well as the update interrupt generation rate, if this interrupt is enable.

Each time the REP_CNT related downcounter reaches zero, an update event is generated and it restarts counting from REP value. As REP_CNT is reloaded with REP value only at the repetition update event U_RC, any write to the TIMx_RCR register is not taken in account until the next repetition update event.

It means in PWM mode (REP+1) corresponds to:

the number of PWM periods in edge-aligned mode

the number of half PWM period in center-aligned mode.

21.4.16 TIM1 capture/compare register 1 (TIM1_CCR1)

Address offset: 0x34

Reset value: 0x0000

15	14	13	12	11	10	9	8	7	6	5	4	3	2	1	0
CCR1[15:0]															
rw	rw	rw	rw	rw	rw	rw	rw	rw	rw	rw	rw	rw	rw	rw	rw

Bits 15:0 **CCR1[15:0]**: Capture/Compare 1 value

If channel CC1 is configured as output: CCR1 is the value to be loaded in the actual capture/compare 1 register (preload value).

It is loaded permanently if the preload feature is not selected in the TIMx_CCMR1 register (bit OC1PE). Else the preload value is copied in the active capture/compare 1 register when an update event occurs.

The active capture/compare register contains the value to be compared to the counter TIMx_CNT and signaled on OC1 output.

If channel CC1 is configured as input: CR1 is the counter value transferred by the last input capture 1 event (IC1). The TIMx_CCR1 register is read-only and cannot be programmed.

21.4.17 TIM1 capture/compare register 2 (TIM1_CCR2)

Address offset: 0x38

Reset value: 0x0000

15	14	13	12	11	10	9	8	7	6	5	4	3	2	1	0
CCR2[15:0]															
rw	rw	rw	rw	rw	rw	rw	rw	rw	rw	rw	rw	rw	rw	rw	rw

Bits 15:0 **CCR2[15:0]**: Capture/Compare 2 value

If channel CC2 is configured as output: CCR2 is the value to be loaded in the actual capture/compare 2 register (preload value).

It is loaded permanently if the preload feature is not selected in the TIMx_CCMR1 register (bit OC2PE). Else the preload value is copied in the active capture/compare 2 register when an update event occurs.

The active capture/compare register contains the value to be compared to the counter TIMx_CNT and signaled on OC2 output.

If channel CC2 is configured as input: CCR2 is the counter value transferred by the last input capture 2 event (IC2). The TIMx_CCR2 register is read-only and cannot be programmed.

21.4.18 TIM1 capture/compare register 3 (TIM1_CCR3)

Address offset: 0x3C

Reset value: 0x0000

15	14	13	12	11	10	9	8	7	6	5	4	3	2	1	0
CCR3[15:0]															
rw	rw	rw	rw	rw	rw	rw	rw	rw	rw	rw	rw	rw	rw	rw	rw

Bits 15:0 **CCR3[15:0]**: Capture/Compare value

If channel CC3 is configured as output: CCR3 is the value to be loaded in the actual capture/compare 3 register (preload value).

It is loaded permanently if the preload feature is not selected in the TIMx_CCMR2 register (bit OC3PE). Else the preload value is copied in the active capture/compare 3 register when an update event occurs.

The active capture/compare register contains the value to be compared to the counter TIMx_CNT and signalled on OC3 output.

If channel CC3 is configured as input: CCR3 is the counter value transferred by the last input capture 3 event (IC3). The TIMx_CCR3 register is read-only and cannot be programmed.

21.4.19 TIM1 capture/compare register 4 (TIM1_CCR4)

Address offset: 0x40

Reset value: 0x0000

15	14	13	12	11	10	9	8	7	6	5	4	3	2	1	0
CCR4[15:0]															
rw	rw	rw	rw	rw	rw	rw	rw	rw	rw	rw	rw	rw	rw	rw	rw

Bits 15:0 **CCR4[15:0]**: Capture/Compare value

If channel CC4 is configured as output: CCR4 is the value to be loaded in the actual capture/compare 4 register (preload value).

It is loaded permanently if the preload feature is not selected in the TIMx_CCMR2 register (bit OC4PE). Else the preload value is copied in the active capture/compare 4 register when an update event occurs.

The active capture/compare register contains the value to be compared to the counter TIMx_CNT and signalled on OC4 output.

If channel CC4 is configured as input: CCR4 is the counter value transferred by the last input capture 4 event (IC4). The TIMx_CCR4 register is read-only and cannot be programmed.

21.4.20 TIM1 break and dead-time register (TIM1_BDTR)

Address offset: 0x44

Reset value: 0x0000 0000

31	30	29	28	27	26	25	24	23	22	21	20	19	18	17	16
Res.	Res.	BK2BID	BKBID	BK2 DSRM	BK DSRM	BK2P	BK2E	BK2F[3:0]				BKF[3:0]			
		rw	rw	rw	rw	rw	rw	rw	rw	rw	rw	rw	rw	rw	rw
15	14	13	12	11	10	9	8	7	6	5	4	3	2	1	0
MOE	AOE	BKP	BKE	OSSR	OSSI	LOCK[1:0]		DTG[7:0]							
rw	rw	rw	rw	rw	rw	rw	rw	rw	rw	rw	rw	rw	rw	rw	rw

Note: As the bits BK2BID, BKBID, BK2DSRM, BKDSRM, BK2P, BK2E, BK2F[3:0], BKF[3:0], AOE, BKP, BKE, OSSI, OSSR and DTG[7:0] can be write-locked depending on the LOCK configuration, it can be necessary to configure all of them during the first write access to the TIMx_BDTR register.

Bits 31:30 Reserved, must be kept at reset value.

Bit 29 **BK2BID**: Break2 bidirectional

Refer to BKBID description

Bit 28 **BKBID**: Break Bidirectional

0: Break input BRK in input mode
1: Break input BRK in bidirectional mode

In the bidirectional mode (BKBID bit set to 1), the break input is configured both in input mode and in open drain output mode. Any active break event asserts a low logic level on the Break input to indicate an internal break event to external devices.

Note: This bit cannot be modified as long as LOCK level 1 has been programmed (LOCK bits in TIMx_BDTR register).

Note: Any write operation to this bit takes a delay of 1 APB clock cycle to become effective.

Bit 27 **BK2DSRM**: Break2 Disarm

Refer to BKDSRM description

Bit 26 **BKDSRM**: Break Disarm

0: Break input BRK is armed
1: Break input BRK is disarmed

This bit is cleared by hardware when no break source is active.

The BKDSRM bit must be set by software to release the bidirectional output control (open-drain output in Hi-Z state) and then be polled it until it is reset by hardware, indicating that the fault condition has disappeared.

Note: Any write operation to this bit takes a delay of 1 APB clock cycle to become effective.

Bit 25 **BK2P**: Break 2 polarity

0: Break input BRK2 is active low
1: Break input BRK2 is active high

Note: This bit cannot be modified as long as LOCK level 1 has been programmed (LOCK bits in TIMx_BDTR register).

Note: Any write operation to this bit takes a delay of 1 APB clock cycle to become effective.

Bit 24 **BK2E**: Break 2 enable

Note: The must only be used with OSSR = OSSI = 1.

Note: This bit cannot be modified when LOCK level 1 has been programmed (LOCK bits in TIMx_BDTR register).

Note: Any write operation to this bit takes a delay of 1 APB clock cycle to become effective.

Bits 23:20 **BK2F[3:0]**: Break 2 filter

This bit-field defines the frequency used to sample BRK2 input and the length of the digital filter applied to BRK2. The digital filter is made of an event counter in which N consecutive events are needed to validate a transition on the output:

0000: No filter, BRK2 acts asynchronously
0001: $f_{SAMPLING}=f_{CK_INT}$, N=2
0010: $f_{SAMPLING}=f_{CK_INT}$, N=4
0011: $f_{SAMPLING}=f_{CK_INT}$, N=8
0100: $f_{SAMPLING}=f_{DTS}/2$, N=6
0101: $f_{SAMPLING}=f_{DTS}/2$, N=8
0110: $f_{SAMPLING}=f_{DTS}/4$, N=6
0111: $f_{SAMPLING}=f_{DTS}/4$, N=8
1000: $f_{SAMPLING}=f_{DTS}/8$, N=6
1001: $f_{SAMPLING}=f_{DTS}/8$, N=8
1010: $f_{SAMPLING}=f_{DTS}/16$, N=5
1011: $f_{SAMPLING}=f_{DTS}/16$, N=6
1100: $f_{SAMPLING}=f_{DTS}/16$, N=8
1101: $f_{SAMPLING}=f_{DTS}/32$, N=5
1110: $f_{SAMPLING}=f_{DTS}/32$, N=6
1111: $f_{SAMPLING}=f_{DTS}/32$, N=8

Note: This bit cannot be modified when LOCK level 1 has been programmed (LOCK bits in TIMx_BDTR register).

Bits 19:16 **BKF[3:0]**: Break filter

This bit-field defines the frequency used to sample BRK input and the length of the digital filter applied to BRK. The digital filter is made of an event counter in which N consecutive events are needed to validate a transition on the output:

0000: No filter, BRK acts asynchronously
0001: $f_{SAMPLING}=f_{CK_INT}$, N=2
0010: $f_{SAMPLING}=f_{CK_INT}$, N=4
0011: $f_{SAMPLING}=f_{CK_INT}$, N=8
0100: $f_{SAMPLING}=f_{DTS}/2$, N=6
0101: $f_{SAMPLING}=f_{DTS}/2$, N=8
0110: $f_{SAMPLING}=f_{DTS}/4$, N=6
0111: $f_{SAMPLING}=f_{DTS}/4$, N=8
1000: $f_{SAMPLING}=f_{DTS}/8$, N=6
1001: $f_{SAMPLING}=f_{DTS}/8$, N=8
1010: $f_{SAMPLING}=f_{DTS}/16$, N=5
1011: $f_{SAMPLING}=f_{DTS}/16$, N=6
1100: $f_{SAMPLING}=f_{DTS}/16$, N=8
1101: $f_{SAMPLING}=f_{DTS}/32$, N=5
1110: $f_{SAMPLING}=f_{DTS}/32$, N=6
1111: $f_{SAMPLING}=f_{DTS}/32$, N=8

Note: This bit cannot be modified when LOCK level 1 has been programmed (LOCK bits in TIMx_BDTR register).

Bit 15 **MOE**: Main output enable

This bit is cleared asynchronously by hardware as soon as one of the break inputs is active (BRK or BRK2). It is set by software or automatically depending on the AOE bit. It is acting only on the channels which are configured in output.

0: In response to a break 2 event. OC and OCN outputs are disabled
In response to a break event or if MOE is written to 0: OC and OCN outputs are disabled or forced to idle state depending on the OSSI bit.

1: OC and OCN outputs are enabled if their respective enable bits are set (CCxE, CCxNE in TIMx_CCER register).

See OC/OCN enable description for more details (*Section 21.4.11: TIM1 capture/compare enable register (TIM1_CCER)*).

Bit 14 **AOE**: Automatic output enable

0: MOE can be set only by software

1: MOE can be set by software or automatically at the next update event (if none of the break inputs BRK and BRK2 is active)

Note: This bit can not be modified as long as LOCK level 1 has been programmed (LOCK bits in TIMx_BDTR register).

Bit 13 **BKP**: Break polarity

0: Break input BRK is active low

1: Break input BRK is active high

Note: This bit can not be modified as long as LOCK level 1 has been programmed (LOCK bits in TIMx_BDTR register).

Note: Any write operation to this bit takes a delay of 1 APB clock cycle to become effective.

Bit 12 **BKE**: Break enable

This bit enables the complete break protection (including all sources connected to bk_acth and BRK sources, as per *Figure 139: Break and Break2 circuitry overview*).

0: Break function disabled

1: Break function enabled

Note: This bit cannot be modified when LOCK level 1 has been programmed (LOCK bits in TIMx_BDTR register).

Note: Any write operation to this bit takes a delay of 1 APB clock cycle to become effective.

Bit 11 **OSSR**: Off-state selection for Run mode

This bit is used when MOE=1 on channels having a complementary output which are configured as outputs. OSSR is not implemented if no complementary output is implemented in the timer.

See OC/OCN enable description for more details (*Section 21.4.11: TIM1 capture/compare enable register (TIM1_CCER)*).

0: When inactive, OC/OCN outputs are disabled (the timer releases the output control which is taken over by the GPIO logic, which forces a Hi-Z state).

1: When inactive, OC/OCN outputs are enabled with their inactive level as soon as CCxE=1 or CCxNE=1 (the output is still controlled by the timer).

Note: This bit can not be modified as soon as the LOCK level 2 has been programmed (LOCK bits in TIMx_BDTR register).

Bit 10 **OSSI**: Off-state selection for Idle mode

This bit is used when MOE=0 due to a break event or by a software write, on channels configured as outputs.
See OC/OCN enable description for more details (*Section 21.4.11: TIM1 capture/compare enable register (TIM1_CCER)*).

0: When inactive, OC/OCN outputs are disabled (the timer releases the output control which is taken over by the GPIO logic and which imposes a Hi-Z state).

1: When inactive, OC/OCN outputs are first forced with their inactive level then forced to their idle level after the deadtime. The timer maintains its control over the output.

Note: This bit can not be modified as soon as the LOCK level 2 has been programmed (LOCK bits in TIMx_BDTR register).

Bits 9:8 **LOCK[1:0]**: Lock configuration

These bits offer a write protection against software errors.

00: LOCK OFF - No bit is write protected.

01: LOCK Level 1 = DTG bits in TIMx_BDTR register, OISx and OISxN bits in TIMx_CR2 register and B*K2BID, BKBID, BK2DSRM, BKDSRM, BK2P, BK2E, BK2F[3:0], BKF[3:0], AOE, BKP, BKE, OSSI, OSSR and DTG[7:0]* bits in TIMx_BDTR register can no longer be written.

10: LOCK Level 2 = LOCK Level 1 + CC Polarity bits (CCxP/CCxNP bits in TIMx_CCER register, as long as the related channel is configured in output through the CCxS bits) as well as OSSR and OSSI bits can no longer be written.

11: LOCK Level 3 = LOCK Level 2 + CC Control bits (OCxM and OCxPE bits in TIMx_CCMRx registers, as long as the related channel is configured in output through the CCxS bits) can no longer be written.

Note: The LOCK bits can be written only once after the reset. Once the TIMx_BDTR register has been written, their content is frozen until the next reset.

Bits 7:0 **DTG[7:0]**: Dead-time generator setup

This bit-field defines the duration of the dead-time inserted between the complementary outputs. DT correspond to this duration.

DTG[7:5] = 0xx => DT = DTG[7:0] x t_{DTG} with $t_{DTG} = t_{DTS}$.
DTG[7:5] = 10x => DT = (64 + DTG[5:0]) x t_{DTG} with $t_{DTG} = 2 \times t_{DTS}$.
DTG[7:5] = 110 => DT = (32 + DTG[4:0]) x t_{DTG} with $t_{DTG} = 8 \times t_{DTS}$.
DTG[7:5] = 111 => DT = (32 + DTG[4:0]) x t_{DTG} with $t_{DTG} = 16 \times t_{DTS}$.
Example if t_{DTS} = 125 ns (8 MHz), dead-time possible values are:
0 to 15875 ns by 125 ns steps,
16 µs to 31750 ns by 250 ns steps,
32 µs to 63 µs by 1 µs steps,
64 µs to 126 µs by 2 µs steps

Note: This bit-field can not be modified as long as LOCK level 1, 2 or 3 has been programmed (LOCK bits in TIMx_BDTR register).

21.4.21 TIM1 DMA control register (TIM1_DCR)

Address offset: 0x48

Reset value: 0x0000

15	14	13	12	11	10	9	8	7	6	5	4	3	2	1	0
Res.	Res.	Res.	DBL[4:0]					Res.	Res.	Res.	DBA[4:0]				
			rw	rw	rw	rw	rw				rw	rw	rw	rw	rw

Bits 15:13 Reserved, must be kept at reset value.

Bits 12:8 **DBL[4:0]**: DMA burst length

This 5-bit vector defines the length of DMA transfers (the timer recognizes a burst transfer when a read or a write access is done to the TIMx_DMAR address), i.e. the number of transfers. Transfers can be in half-words or in bytes (see example below).

00000: 1 transfer
00001: 2 transfers
00010: 3 transfers
...
10001: 18 transfers

Example: Let us consider the following transfer: DBL = 7 bytes & DBA = TIMx_CR1.

– If DBL = 7 bytes and DBA = TIMx_CR1 represents the address of the byte to be transferred, the address of the transfer should be given by the following equation:

(TIMx_CR1 address) + DBA + (DMA index), where DMA index = DBL

In this example, 7 bytes are added to (TIMx_CR1 address) + DBA, which gives us the address from/to which the data is copied. In this case, the transfer is done to 7 registers starting from the following address: (TIMx_CR1 address) + DBA

According to the configuration of the DMA Data Size, several cases may occur:

– If the DMA Data Size is configured in half-words, 16-bit data is transferred to each of the 7 registers.
– If the DMA Data Size is configured in bytes, the data is also transferred to 7 registers: the first register contains the first MSB byte, the second register, the first LSB byte and so on. So with the transfer Timer, one also has to specify the size of data transferred by DMA.

Bits 7:5 Reserved, must be kept at reset value.

Bits 4:0 **DBA[4:0]**: DMA base address

This 5-bits vector defines the base-address for DMA transfers (when read/write access are done through the TIMx_DMAR address). DBA is defined as an offset starting from the address of the TIMx_CR1 register.

Example:

00000: TIMx_CR1,
00001: TIMx_CR2,
00010: TIMx_SMCR,
...

21.4.22 TIM1 DMA address for full transfer (TIM1_DMAR)

Address offset: 0x4C

Reset value: 0x0000 0000

31	30	29	28	27	26	25	24	23	22	21	20	19	18	17	16
DMAB[31:16]															
rw	rw	rw	rw	rw	rw	rw	rw	rw	rw	rw	rw	rw	rw	rw	rw
15	14	13	12	11	10	9	8	7	6	5	4	3	2	1	0
DMAB[15:0]															
rw	rw	rw	rw	rw	rw	rw	rw	rw	rw	rw	rw	rw	rw	rw	rw

Bits 31:0 **DMAB[31:0]**: DMA register for burst accesses

A read or write operation to the DMAR register accesses the register located at the address (TIMx_CR1 address) + (DBA + DMA index) x 4

where TIMx_CR1 address is the address of the control register 1, DBA is the DMA base address configured in TIMx_DCR register, DMA index is automatically controlled by the DMA transfer, and ranges from 0 to DBL (DBL configured in TIMx_DCR).

21.4.23 TIM1 option register 1 (TIM1_OR1)

Address offset: 0x50

Reset value: 0x0000 0000

31	30	29	28	27	26	25	24	23	22	21	20	19	18	17	16
Res.	Res.	Res.	Res.	Res.	Res.	Res.	Res.	Res.	Res.	Res.	Res.	Res.	Res.	Res.	Res.

15	14	13	12	11	10	9	8	7	6	5	4	3	2	1	0
Res.	Res.	Res.	Res.	Res.	Res.	Res.	Res.	Res.	Res.	Res.	TI1_ RMP	Res.	Res.	TIM1_ETR_ ADC_RMP[1:0]	
											rw			rw	rw

Bits 31:5 Reserved, must be kept at reset value.

Bit 4 **TI1_RMP**: Input Capture 1 remap

0: TIM1 input capture 1 is connected to I/O

1: TIM1 input capture 1 is connected to COMP1 output

Bits 3:2 Reserved, must be kept at reset value.

Bits 1:0 **TIM1_ETR_ADC_RMP[1:0]**: TIM1_ETR_ADC remapping capability

00: TIM1_ETR is not connected to ADC AWDx (must be selected when the ETR comes from the ETR input pin)

01: TIM1_ETR is connected to ADC AWD1

10: Reserved

11: Reserved

Note: ADC AWD1 source is 'ORed' with the TIM1_ETR input signals. When ADC AWD1 is used, it is necessary to make sure that the corresponding TIM1_ETR input pin is not enabled in the alternate function controller.

21.4.24 TIM1 capture/compare mode register 3 (TIM1_CCMR3)

Address offset: 0x54

Reset value: 0x0000 0000

The channels 5 and 6 can only be configured in output.

Output compare mode:

31	30	29	28	27	26	25	24	23	22	21	20	19	18	17	16
Res.	Res.	Res.	Res.	Res.	Res.	Res.	OC6M[3]	Res.	Res.	Res.	Res.	Res.	Res.	Res.	OC5M[3]
							rw								rw

15	14	13	12	11	10	9	8	7	6	5	4	3	2	1	0
OC6 CE	OC6M[2:0]			OC6 PE	OC6FE	Res.	Res.	OC5 CE	OC5M[2:0]			OC5PE	OC5FE	Res.	Res.
rw	rw	rw	rw	rw	rw			rw	rw	rw	rw	rw	rw		

Bits 31:25 Reserved, must be kept at reset value.

Bits 23:17 Reserved, must be kept at reset value.

Bit 15 **OC6CE**: Output compare 6 clear enable
Refer to OC1CE description.

Bits 24, 14, 13, 12 **OC6M[3:0]**: Output compare 6 mode
Refer to OC1M description.

Bit 11 **OC6PE**: Output compare 6 preload enable
Refer to OC1PE description.

Bit 10 **OC6FE**: Output compare 6 fast enable
Refer to OC1FE description.

Bits 9:8 Reserved, must be kept at reset value.

Bit 7 **OC5CE:** Output compare 5 clear enable
Refer to OC1CE description.

Bits 16, 6, 5, 4 **OC5M[3:0]**: Output compare 5 mode
Refer to OC1M description.

Bit 3 **OC5PE**: Output compare 5 preload enable
Refer to OC1PE description.

Bit 2 **OC5FE**: Output compare 5 fast enable
Refer to OC1FE description.

Bits 1:0 Reserved, must be kept at reset value.

21.4.25 TIM1 capture/compare register 5 (TIM1_CCR5)

Address offset: 0x58

Reset value: 0x0000 0000

31	30	29	28	27	26	25	24	23	22	21	20	19	18	17	16
GC5C3	GC5C2	GC5C1	Res.	Res.	Res.	Res.	Res.	Res.	Res.	Res.	Res.	Res.	Res.	Res.	Res.
rw	rw	rw													

15	14	13	12	11	10	9	8	7	6	5	4	3	2	1	0
CCR5[15:0]															
rw	rw	rw	rw	rw	rw	rw	rw	rw	rw	rw	rw	rw	rw	rw	rw

Bit 31 **GC5C3**: Group Channel 5 and Channel 3

Distortion on Channel 3 output:
0: No effect of OC5REF on OC3REFC
1: OC3REFC is the logical AND of OC3REFC and OC5REF
This bit can either have immediate effect or be preloaded and taken into account after an update event (if preload feature is selected in TIMxCCMR2).

Note: it is also possible to apply this distortion on combined PWM signals.

Bit 30 **GC5C2**: Group Channel 5 and Channel 2

Distortion on Channel 2 output:
0: No effect of OC5REF on OC2REFC
1: OC2REFC is the logical AND of OC2REFC and OC5REF
This bit can either have immediate effect or be preloaded and taken into account after an update event (if preload feature is selected in TIMxCCMR1).

Note: it is also possible to apply this distortion on combined PWM signals.

Bit 29 **GC5C1**: Group Channel 5 and Channel 1

Distortion on Channel 1 output:
0: No effect of OC5REF on OC1REFC5
1: OC1REFC is the logical AND of OC1REFC and OC5REF
This bit can either have immediate effect or be preloaded and taken into account after an update event (if preload feature is selected in TIMxCCMR1).

Note: it is also possible to apply this distortion on combined PWM signals.

Bits 28:16 Reserved, must be kept at reset value.

Bits 15:0 **CCR5[15:0]**: Capture/Compare 5 value

CCR5 is the value to be loaded in the actual capture/compare 5 register (preload value).
It is loaded permanently if the preload feature is not selected in the TIMx_CCMR3 register (bit OC5PE). Else the preload value is copied in the active capture/compare 5 register when an update event occurs.
The active capture/compare register contains the value to be compared to the counter TIMx_CNT and signaled on OC5 output.

21.4.26 TIM1 capture/compare register 6 (TIM1_CCR6)

Address offset: 0x5C

Reset value: 0x0000

15	14	13	12	11	10	9	8	7	6	5	4	3	2	1	0
CCR6[15:0]															
rw	rw	rw	rw	rw	rw	rw	rw	rw	rw	rw	rw	rw	rw	rw	rw

Bits 15:0 **CCR6[15:0]**: Capture/Compare 6 value

CCR6 is the value to be loaded in the actual capture/compare 6 register (preload value).
It is loaded permanently if the preload feature is not selected in the TIMx_CCMR3 register (bit OC6PE). Else the preload value is copied in the active capture/compare 6 register when an update event occurs.
The active capture/compare register contains the value to be compared to the counter TIMx_CNT and signaled on OC6 output.

21.4.27 TIM1 alternate function option register 1 (TIM1_AF1)

Address offset: 0x60

Reset value: 0x0000 0001

31	30	29	28	27	26	25	24	23	22	21	20	19	18	17	16
Res.	Res.	Res.	Res.	Res.	Res.	Res.	Res.	Res.	Res.	Res.	Res.	Res.	Res.	ETRSEL[3:2]	
														rw	rw

15	14	13	12	11	10	9	8	7	6	5	4	3	2	1	0
ETRSEL[1:0]		Res.	Res.	Res.	BK CMP1P	BKINP	Res.	Res.	Res.	Res.	Res.	Res.	Res.	BK CMP1E	BKINE
rw	rw				rw	rw								rw	rw

Bits 31:18 Reserved, must be kept at reset value.

Bits 17:14 **ETRSEL[3:0]**: ETR source selection

These bits select the ETR input source.

0000: ETR legacy mode

0001: COMP1 output

Others: Reserved

Note: These bits can not be modified as long as LOCK level 1 has been programmed (LOCK bits in TIMx_BDTR register).

Bits 13:11 Reserved, must be kept at reset value.

Bit 10 **BKCMP1P**: BRK COMP1 input polarity

This bit selects the COMP1 input sensitivity. It must be programmed together with the BKP polarity bit.

0: COMP1 input polarity is not inverted (active low if BKP=0, active high if BKP=1)

1: COMP1 input polarity is inverted (active high if BKP=0, active low if BKP=1)

Note: This bit can not be modified as long as LOCK level 1 has been programmed (LOCK bits in TIMx_BDTR register).

Bit 9 **BKINP**: BRK BKIN input polarity

This bit selects the BKIN alternate function input sensitivity. It must be programmed together with the BKP polarity bit.

0: BKIN input polarity is not inverted (active low if BKP=0, active high if BKP=1)

1: BKIN input polarity is inverted (active high if BKP=0, active low if BKP=1)

Note: This bit can not be modified as long as LOCK level 1 has been programmed (LOCK bits in TIMx_BDTR register).

Bits 8:2 Reserved, must be kept at reset value.

Bit 1 **BKCMP1E**: BRK COMP1 enable

This bit enables the COMP1 for the timer's BRK input. COMP1 output is 'ORed' with the other BRK sources.

0: COMP1 input disabled

1: COMP1 input enabled

Note: This bit can not be modified as long as LOCK level 1 has been programmed (LOCK bits in TIMx_BDTR register).

Bit 0 **BKINE**: BRK BKIN input enable

This bit enables the BKIN alternate function input for the timer's BRK input. BKIN input is 'ORed' with the other BRK sources.

0: BKIN input disabled

1: BKIN input enabled

Note: This bit can not be modified as long as LOCK level 1 has been programmed (LOCK bits in TIMx_BDTR register).

Note: Refer to Figure 118: TIM1 ETR input circuitry and to Figure 139: Break and Break2 circuitry overview.

21.4.28 TIM1 Alternate function register 2 (TIM1_AF2)

Address offset: 0x64

Reset value: 0x0000 0001

31	30	29	28	27	26	25	24	23	22	21	20	19	18	17	16
Res.	Res.	Res.	Res.	Res.	Res.	Res.	Res.	Res.	Res.	Res.	Res.	Res.	Res.	Res.	Res.

15	14	13	12	11	10	9	8	7	6	5	4	3	2	1	0
Res.	Res.	Res.	Res.	Res.	BK2 CMP1 P	BK2 INP	Res.	Res.	Res.	Res.	Res.	Res.	Res.	BK2 CMP1E	BK2INE
					rw	rw								rw	rw

Bits 31:11 Reserved, must be kept at reset value.

Bit 10 **BK2CMP1P**: BRK2 COMP1 input polarity

This bit selects the COMP1 input sensitivity. It must be programmed together with the BK2P polarity bit.

0: COMP1 input polarity is not inverted (active low if BK2P=0, active high if BK2P=1)

1: COMP1 input polarity is inverted (active high if BK2P=0, active low if BK2P=1)

Note: This bit can not be modified as long as LOCK level 1 has been programmed (LOCK bits in TIMx_BDTR register).

Bit 9 **BK2INP**: BRK2 BKIN2 input polarity

This bit selects the BKIN2 alternate function input sensitivity. It must be programmed together with the BK2P polarity bit.

0: BKIN2 input polarity is not inverted (active low if BK2P=0, active high if BK2P=1)

1: BKIN2 input polarity is inverted (active high if BK2P=0, active low if BK2P=1)

Note: This bit can not be modified as long as LOCK level 1 has been programmed (LOCK bits in TIMx_BDTR register).

Bits 8:2 Reserved, must be kept at reset value.

Bit 1 **BK2CMP1E**: BRK2 COMP1 enable

This bit enables the COMP1 for the timer's BRK2 input. COMP1 output is 'ORed' with the other BRK2 sources.

0: COMP1 input disabled

1: COMP1 input enabled

Note: This bit can not be modified as long as LOCK level 1 has been programmed (LOCK bits in TIMx_BDTR register).

Bit 0 **BK2INE**: BRK2 BKIN input enable

This bit enables the BKIN2 alternate function input for the timer's BRK2 input. BKIN2 input is 'ORed' with the other BRK2 sources.

0: BKIN2 input disabled

1: BKIN2 input enabled

Note: This bit can not be modified as long as LOCK level 1 has been programmed (LOCK bits in TIMx_BDTR register).

Note: Refer to Figure 139: Break and Break2 circuitry overview.

21.4.29 TIM1 timer input selection register (TIM1_TISEL)

Address offset: 0x68

Reset value: 0x0000 0000

31	30	29	28	27	26	25	24	23	22	21	20	19	18	17	16
Res.	Res.	Res.	Res.	TI4SEL[3:0]				Res.	Res.	Res.	Res.	TI3SEL[3:0]			
				rw	rw	rw	rw					rw	rw	rw	rw
15	14	13	12	11	10	9	8	7	6	5	4	3	2	1	0
Res.	Res.	Res.	Res.	TI2SEL[3:0]				Res.	Res.	Res.	Res.	TI1SEL[3:0]			
				rw	rw	rw	rw					rw	rw	rw	rw

Bits 31:28 Reserved, must be kept at reset value.

Bits 27:24 **TI4SEL[3:0]**: selects TI4[0] to TI4[15] input

0000: TIM1_CH4 input

Others: Reserved

Bits 23:20 Reserved, must be kept at reset value.

Bits 19:16 **TI3SEL[3:0]**: selects TI3[0] to TI3[15] input

0000: TIM1_CH3 input

Others: Reserved

Bits 15:12 Reserved, must be kept at reset value.

Bits 11:8 **TI2SEL[3:0]**: selects TI2[0] to TI2[15] input

0000: TIM1_CH2 input

Others: Reserved

Bits 7:4 Reserved, must be kept at reset value.

Bits 3:0 **TI1SEL[3:0]**: selects TI1[0] to TI1[15] input

0000: TIM1_CH1 input

Others: Reserved

21.4.30 TIM1 register map

TIM1 registers are mapped as 16-bit addressable registers as described in the table below:

Table 138. TIM1 register map and reset values

Offset	Register name	31	30	29	28	27	26	25	24	23	22	21	20	19	18	17	16	15	14	13	12	11	10	9	8	7	6	5	4	3	2	1	0
0x00	**TIM1_CR1**	Res.	Res.	Res.	Res.	Res.	Res.	Res.	Res.	Res.	Res.	Res.	Res.	Res.	Res.	Res.	Res.	Res.	Res.	Res.	Res.	UIFREMAP	Res.	CKD [1:0]		ARPE	CMS [1:0]		DIR	OPM	URS	UDIS	CEN
	Reset value																					0		0	0	0	0	0	0	0	0	0	0
0x04	**TIM1_CR2**	Res.	Res.	Res.	Res.	Res.	Res.	Res.	Res.	MMS2[3:0]				Res.	OIS6	Res.	OIS5	Res.	OIS4	OIS3N	OIS3	OIS2N	OIS2	OIS1N	OIS1	TI1S	MMS [2:0]			CCDS	CCUS	Res.	CCPC
	Reset value									0	0	0	0		0		0		0	0	0	0	0	0	0	0	0	0	0	0	0		0
0x08	**TIM1_SMCR**	Res.	Res.	Res.	Res.	Res.	Res.	Res.	Res.	Res.	Res.	TS [4:3]		Res.	Res.	Res.	SMS[3]	ETP	ECE	ETP S [1:0]		ETF[3:0]				MSM	TS[2:0]			OCCS	SMS[2:0]		
	Reset value											0	0				0	0	0	0	0	0	0	0	0	0	0	0	0	0	0	0	0
0x0C	**TIM1_DIER**	Res.	Res.	Res.	Res.	Res.	Res.	Res.	Res.	Res.	Res.	Res.	Res.	Res.	Res.	Res.	Res.	Res.	TDE	COMDE	CC4DE	CC3DE	CC2DE	CC1DE	UDE	BIE	TIE	COMIE	CC4IE	CC3IE	CC2IE	CC1IE	UIE
	Reset value																		0	0	0	0	0	0	0	0	0	0	0	0	0	0	0
0x10	**TIM1_SR**	Res.	Res.	Res.	Res.	Res.	Res.	Res.	Res.	Res.	Res.	Res.	Res.	Res.	Res.	CC6IF	CC5IF	Res.	Res.	SBIF	CC4OF	CC3OF	CC2OF	CC1OF	B2IF	BIF	TIF	COMIF	CC4IF	CC3IF	CC2IF	CC1IF	UIF
	Reset value															0	0			0	0	0	0	0	0	0	0	0	0	0	0	0	0
0x14	**TIM1_EGR**	Res.	Res.	Res.	Res.	Res.	Res.	Res.	Res.	Res.	Res.	Res.	Res.	Res.	Res.	Res.	Res.	Res.	Res.	Res.	Res.	Res.	Res.	Res.	B2G	BG	TG	COMG	CC4G	CC3G	CC2G	CC1G	UG
	Reset value																								0	0	0	0	0	0	0	0	0
0x18	**TIM1_CCMR1** Output Compare mode	Res.	Res.	Res.	Res.	Res.	Res.	Res.	OC2M[3]	Res.	Res.	Res.	Res.	Res.	Res.	Res.	OC1M[3]	OC2CE	OC2M [2:0]			OC2PE	OC2FE	CC2S [1:0]		OC1CE	OC1M [2:0]			OC1PE	OC1FE	CC1S [1:0]	
	Reset value								0								0	0	0	0	0	0	0	0	0	0	0	0	0	0	0	0	0
	TIM1_CCMR1 Input Capture mode	Res.	Res.	Res.	Res.	Res.	Res.	Res.	Res.	Res.	Res.	Res.	Res.	Res.	Res.	Res.	Res.	IC2F[3:0]				IC2 PSC [1:0]		CC2S [1:0]		IC1F[3:0]				IC1 PSC [1:0]		CC1S [1:0]	
	Reset value																	0	0	0	0	0	0	0	0	0	0	0	0	0	0	0	0
0x1C	**TIM1_CCMR2** Output Compare mode	Res.	Res.	Res.	Res.	Res.	Res.	Res.	OC4M[3]	Res.	Res.	Res.	Res.	Res.	Res.	Res.	OC3M[3]	OC4CE	OC4M [2:0]			OC4PE	OC4FE	CC4S [1:0]		OC3CE	OC3M [2:0]			OC3PE	OC3FE	CC3S [1:0]	
	Reset value								0								0	0	0	0	0	0	0	0	0	0	0	0	0	0	0	0	0
	TIM1_CCMR2 Input Capture mode	Res.	Res.	Res.	Res.	Res.	Res.	Res.	Res.	Res.	Res.	Res.	Res.	Res.	Res.	Res.	Res.	IC4F[3:0]				IC4 PSC [1:0]		CC4S [1:0]		IC3F[3:0]				IC3 PSC [1:0]		CC3S [1:0]	
	Reset value																	0	0	0	0	0	0	0	0	0	0	0	0	0	0	0	0
0x20	**TIM1_CCER**	Res.	Res.	Res.	Res.	Res.	Res.	Res.	Res.	Res.	Res.	CC6P	CC6E	Res.	Res.	CC5P	CC5E	CC4NP	Res.	CC4P	CC4E	CC3NP	CC3NE	CC3P	CC3E	CC2NP	CC2NE	CC2P	CC2E	CC1NP	CC1NE	CC1P	CC1E
	Reset value											0	0			0	0	0		0	0	0	0	0	0	0	0	0	0	0	0	0	0

Table 138. TIM1 register map and reset values (continued)

Offset	Register name	31	30	29	28	27	26	25	24	23	22	21	20	19	18	17	16	15	14	13	12	11	10	9	8	7	6	5	4	3	2	1	0
0x24	TIM1_CNT	UIFCP	Res.	Res.	Res.	Res.	Res.	Res.	Res.	Res.	Res.	Res.	Res.	Res.	Res.	Res.	Res.	CNT[15:0]															
	Reset value	0																0	0	0	0	0	0	0	0	0	0	0	0	0	0	0	0
0x28	TIM1_PSC	Res.	Res.	Res.	Res.	Res.	Res.	Res.	Res.	Res.	Res.	Res.	Res.	Res.	Res.	Res.	Res.	PSC[15:0]															
	Reset value																	0	0	0	0	0	0	0	0	0	0	0	0	0	0	0	0
0x2C	TIM1_ARR	Res.	Res.	Res.	Res.	Res.	Res.	Res.	Res.	Res.	Res.	Res.	Res.	Res.	Res.	Res.	Res.	ARR[15:0]															
	Reset value																	1	1	1	1	1	1	1	1	1	1	1	1	1	1	1	1
0x30	TIM1_RCR	Res.	Res.	Res.	Res.	Res.	Res.	Res.	Res.	Res.	Res.	Res.	Res.	Res.	Res.	Res.	Res.	REP[15:0]															
	Reset value																	0	0	0	0	0	0	0	0	0	0	0	0	0	0	0	0
0x34	TIM1_CCR1	Res.	Res.	Res.	Res.	Res.	Res.	Res.	Res.	Res.	Res.	Res.	Res.	Res.	Res.	Res.	Res.	CCR1[15:0]															
	Reset value																	0	0	0	0	0	0	0	0	0	0	0	0	0	0	0	0
0x38	TIM1_CCR2	Res.	Res.	Res.	Res.	Res.	Res.	Res.	Res.	Res.	Res.	Res.	Res.	Res.	Res.	Res.	Res.	CCR2[15:0]															
	Reset value																	0	0	0	0	0	0	0	0	0	0	0	0	0	0	0	0
0x3C	TIM1_CCR3	Res.	Res.	Res.	Res.	Res.	Res.	Res.	Res.	Res.	Res.	Res.	Res.	Res.	Res.	Res.	Res.	CCR3[15:0]															
	Reset value																	0	0	0	0	0	0	0	0	0	0	0	0	0	0	0	0
0x40	TIM1_CCR4	Res.	Res.	Res.	Res.	Res.	Res.	Res.	Res.	Res.	Res.	Res.	Res.	Res.	Res.	Res.	Res.	CCR4[15:0]															
	Reset value																	0	0	0	0	0	0	0	0	0	0	0	0	0	0	0	0
0x44	TIM1_BDTR	Res.	Res.	BK2BID	BKBID	BK2DSRM	BKDSRM	BK2P	BK2E	BK2F[3:0]				BKF[3:0]				MOE	AOE	BKP	BKE	OSSR	OSSI	LOCK [1:0]		DT[7:0]							
	Reset value			0	0	0	0	0	0	0	0	0	0	0	0	0	0	0	0	0	0	0	0	0	0	0	0	0	0	0	0	0	0
0x48	TIM1_DCR	Res.	Res.	Res.	Res.	Res.	Res.	Res.	Res.	Res.	Res.	Res.	Res.	Res.	Res.	Res.	Res.	Res.	Res.	Res.	DBL[4:0]					Res.	Res.	Res.	DBA[4:0]				
	Reset value																				0	0	0	0	0				0	0	0	0	0
0x4C	TIM1_DMAR	DMAB[31:0]																															
	Reset value																	0	0	0	0	0	0	0	0	0	0	0	0	0	0	0	0
0x50	TIM1_OR1	Res.	Res.	Res.	Res.	Res.	Res.	Res.	Res.	Res.	Res.	Res.	Res.	Res.	Res.	Res.	Res.	Res.	Res.	Res.	Res.	Res.	Res.	Res.	Res.	Res.	Res.	Res.	TI1_RMP	Res.	Res.	TIM1_ETR_ADC_RMP	
	Reset value																												0			0	0

Table 138. TIM1 register map and reset values (continued)

Offset	Register name	31	30	29	28	27	26	25	24	23	22	21	20	19	18	17	16	15	14	13	12	11	10	9	8	7	6	5	4	3	2	1	0
0x54	**TIM1_CCMR3** Output Compare mode	Res.	Res.	Res.	Res.	Res.	Res.	Res.	OC6M[3]	Res.	Res.	Res.	Res.	Res.	Res.	Res.	OC5M[3]	OC6CE	OC6M [2:0]			OC6PE	OC6FE	Res.	Res.	OC5CE	OC5M [2:0]			OC5PE	OC5FE	Res.	Res.
	Reset value								0								0	0	0	0	0	0	0			0	0	0	0	0	0		
0x58	**TIM1_CCR5**	GC5C3	GC5C2	GC5C1	Res.	Res.	Res.	Res.	Res.	Res.	Res.	Res.	Res.	Res.	Res.	Res.	Res.	CCR5[15:0]															
	Reset value	0	0	0														0	0	0	0	0	0	0	0	0	0	0	0	0	0	0	0
0x5C	**TIM1_CCR6**	Res.	Res.	Res.	Res.	Res.	Res.	Res.	Res.	Res.	Res.	Res.	Res.	Res.	Res.	Res.	Res.	CCR6[15:0]															
	Reset value																	0	0	0	0	0	0	0	0	0	0	0	0	0	0	0	0
0x60	**TIM1_AF1**	Res.	Res.	Res.	Res.	Res.	Res.	Res.	Res.	Res.	Res.	Res.	Res.	Res.	Res.	Res ETRSEL [3:0]				Res.	Res.	Res.	BKCMP1P	BKINP	Res.	Res.	Res.	Res.	Res.	Res.	Res.	BKCMP1E	BKINE
	Reset value															0	0	0	0				0	0								0	1
0x64	**TIM1_AF2**	Res.	Res.	Res.	Res.	Res.	Res.	Res.	Res.	Res.	Res.	Res.	Res.	Res.	Res.	Res.	Res.	Res.	Res.	Res.	Res.	Res.	BK2CMP1P	BK2INP	Res.	Res.	Res.	Res.	Res.	Res.	Res.	BK2CMP1E	BK2INE
	Reset value																						0	0								0	1
0x68	**TIM1_TISEL**	Res.	Res.	Res.	Res.	TI4SEL[3:0]				Res.	Res.	Res.	Res.	TI3SEL[3:0]				Res.	Res.	Res.	Res.	TI2SEL[3:0]				Res.	Res.	Res.	Res.	TI1SEL[3:0]			
	Reset value					0	0	0	0					0	0	0	0					0	0	0	0					0	0	0	0

Refer to *Section 2.2 on page 55* for the register boundary addresses.

22 General-purpose timer (TIM2)

22.1 TIM2 introduction

The general-purpose timer TIM2 consists of a 32-bit auto-reload counter driven by a programmable prescaler.

The timer may be used for a variety of purposes, including measuring the pulse lengths of input signals (*input capture*) or generating output waveforms (*output compare and PWM*).

Pulse lengths and waveform periods can be modulated from a few microseconds to several milliseconds using the timer prescaler and the RCC clock controller prescalers.

22.2 TIM2 main features

- 32-bit up, down, up/down auto-reload counter.
- 16-bit programmable prescaler used to divide (also “on the fly”) the counter clock frequency by any factor between 1 and 65535.
- Up to 4 independent channels for:
  - Input capture
  - Output compare
  - PWM generation (Edge- and Center-aligned modes)
  - One-pulse mode output
- Synchronization circuit to control the timer with external signals and to interconnect several timers.
- Interrupt/DMA generation on the following events:
  - Update: counter overflow/underflow, counter initialization (by software or internal/external trigger)
  - Trigger event (counter start, stop, initialization or count by internal/external trigger)
  - Input capture
  - Output compare
- Supports incremental (quadrature) encoder and hall-sensor circuitry for positioning purposes
- Trigger input for external clock or cycle-by-cycle current management

Figure 156. General-purpose timer block diagram

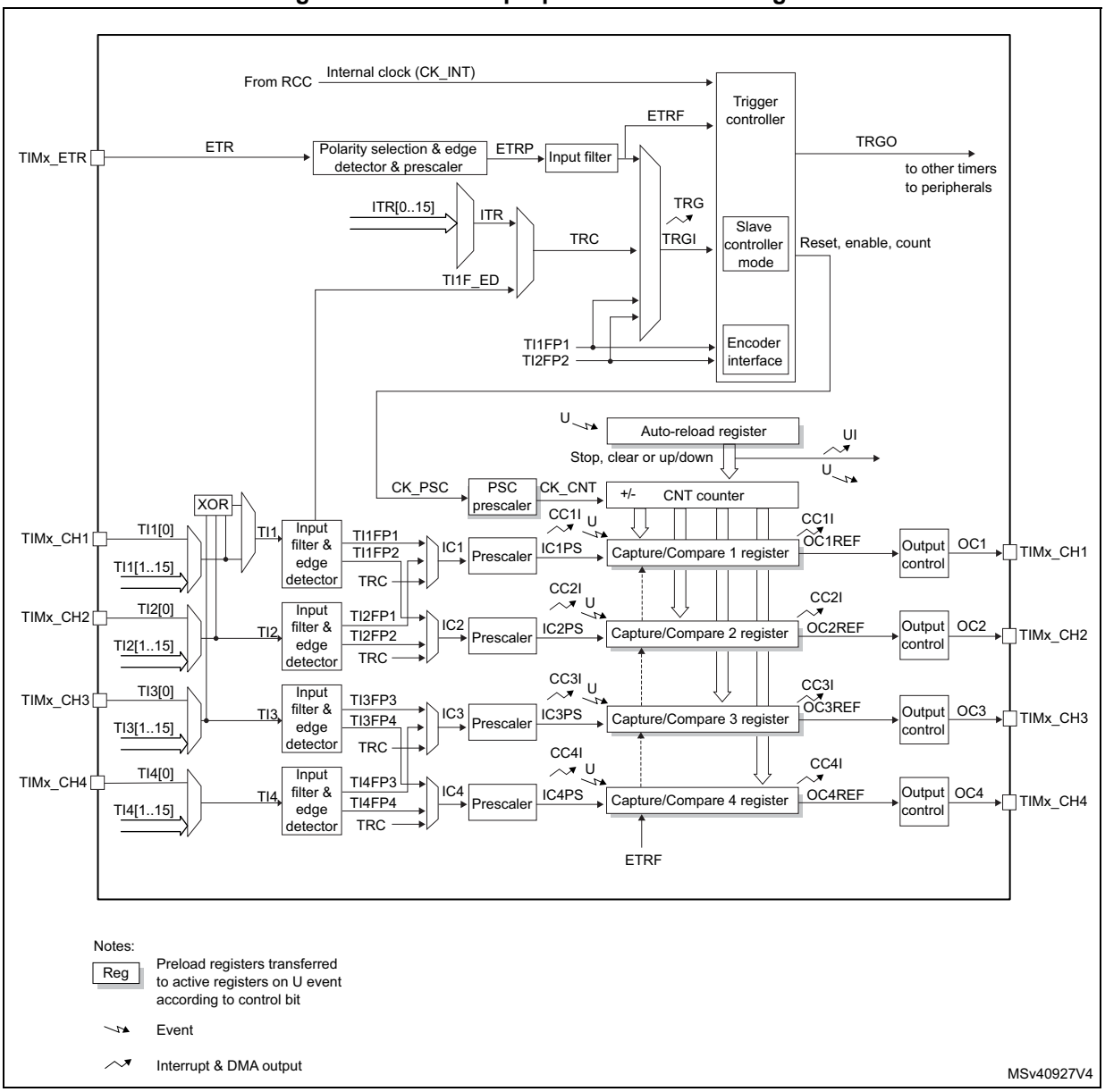

22.3 TIM2 functional description

22.3.1 Time-base unit

The main block of the programmable timer is a 32-bit counter with its related auto-reload register. The counter can count up, down or both up and down. The counter clock can be divided by a prescaler.

The counter, the auto-reload register and the prescaler register can be written or read by software. This is true even when the counter is running.

The time-base unit includes:

- Counter Register (TIMx_CNT)
- Prescaler Register (TIMx_PSC)
- Auto-Reload Register (TIMx_ARR)

The auto-reload register is preloaded. Writing to or reading from the auto-reload register accesses the preload register. The content of the preload register are transferred into the shadow register permanently or at each update event (UEV), depending on the auto-reload preload enable bit (ARPE) in TIMx_CR1 register. The update event is sent when the counter reaches the overflow (or underflow when downcounting) and if the UDIS bit equals 0 in the TIMx_CR1 register. It can also be generated by software. The generation of the update event is described in detail for each configuration.

The counter is clocked by the prescaler output CK_CNT, which is enabled only when the counter enable bit (CEN) in TIMx_CR1 register is set (refer also to the slave mode controller description to get more details on counter enabling).

Note that the actual counter enable signal CNT_EN is set 1 clock cycle after CEN.

Prescaler description

The prescaler can divide the counter clock frequency by any factor between 1 and 65536. It is based on a 16-bit counter controlled through a 16-bit/32-bit register (in the TIMx_PSC register). It can be changed on the fly as this control register is buffered. The new prescaler ratio is taken into account at the next update event.

Figure 157 and *Figure 158* give some examples of the counter behavior when the prescaler ratio is changed on the fly:

Figure 157. Counter timing diagram with prescaler division change from 1 to 2

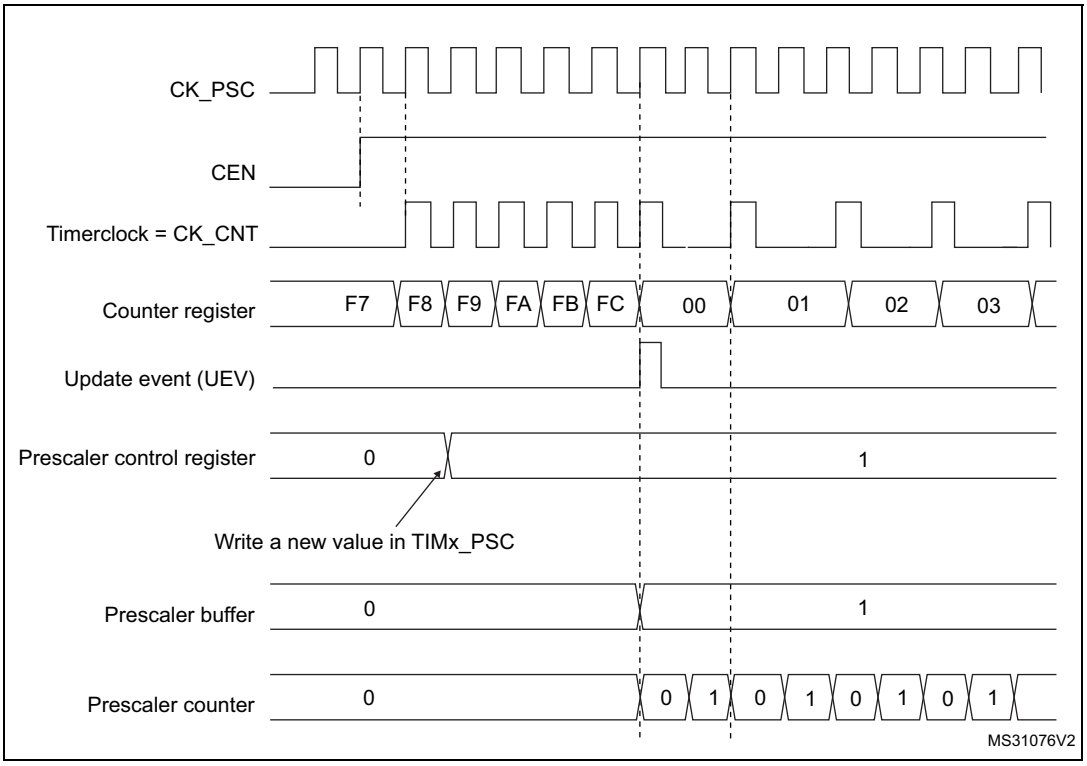

Figure 158. Counter timing diagram with prescaler division change from 1 to 4

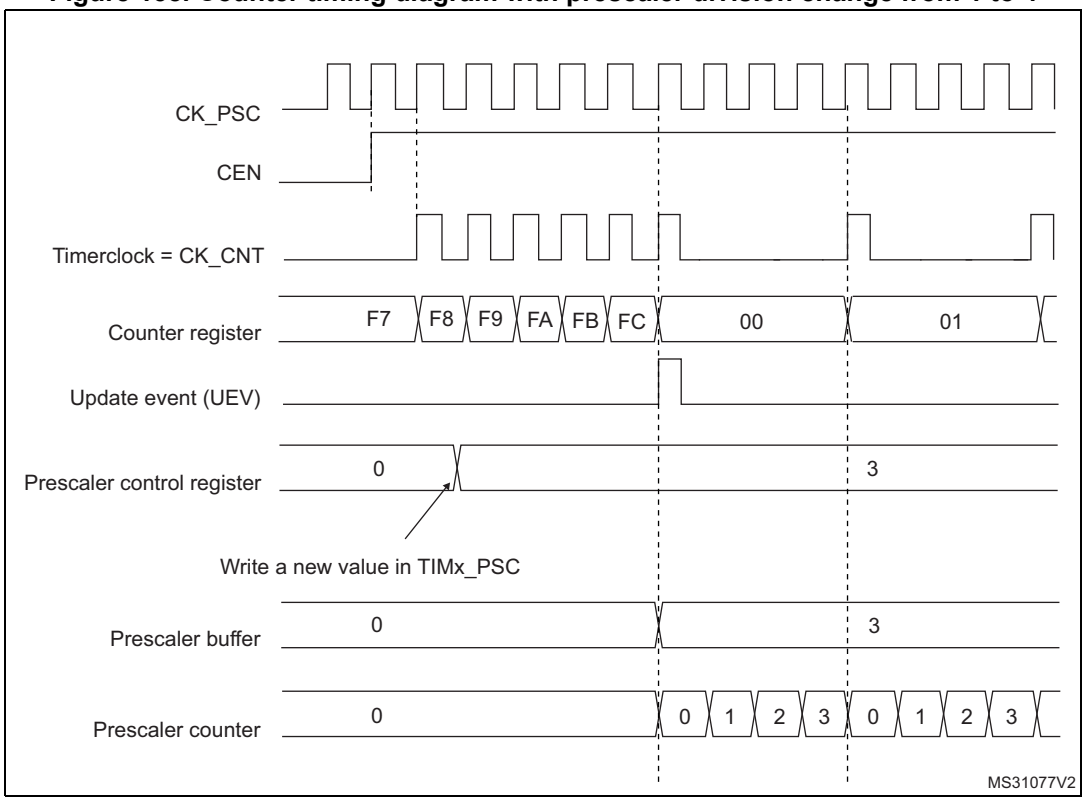

22.3.2 Counter modes

Upcounting mode

In upcounting mode, the counter counts from 0 to the auto-reload value (content of the TIMx_ARR register), then restarts from 0 and generates a counter overflow event.

An Update event can be generated at each counter overflow or by setting the UG bit in the TIMx_EGR register (by software or by using the slave mode controller).

The UEV event can be disabled by software by setting the UDIS bit in TIMx_CR1 register. This is to avoid updating the shadow registers while writing new values in the preload registers. Then no update event occurs until the UDIS bit has been written to 0. However, the counter restarts from 0, as well as the counter of the prescaler (but the prescale rate does not change). In addition, if the URS bit (update request selection) in TIMx_CR1 register is set, setting the UG bit generates an update event UEV but without setting the UIF flag (thus no interrupt or DMA request is sent). This is to avoid generating both update and capture interrupts when clearing the counter on the capture event.

When an update event occurs, all the registers are updated and the update flag (UIF bit in TIMx_SR register) is set (depending on the URS bit):

- The buffer of the prescaler is reloaded with the preload value (content of the TIMx_PSC register)
- The auto-reload shadow register is updated with the preload value (TIMx_ARR)

The following figures show some examples of the counter behavior for different clock frequencies when TIMx_ARR=0x36.

Figure 159. Counter timing diagram, internal clock divided by 1

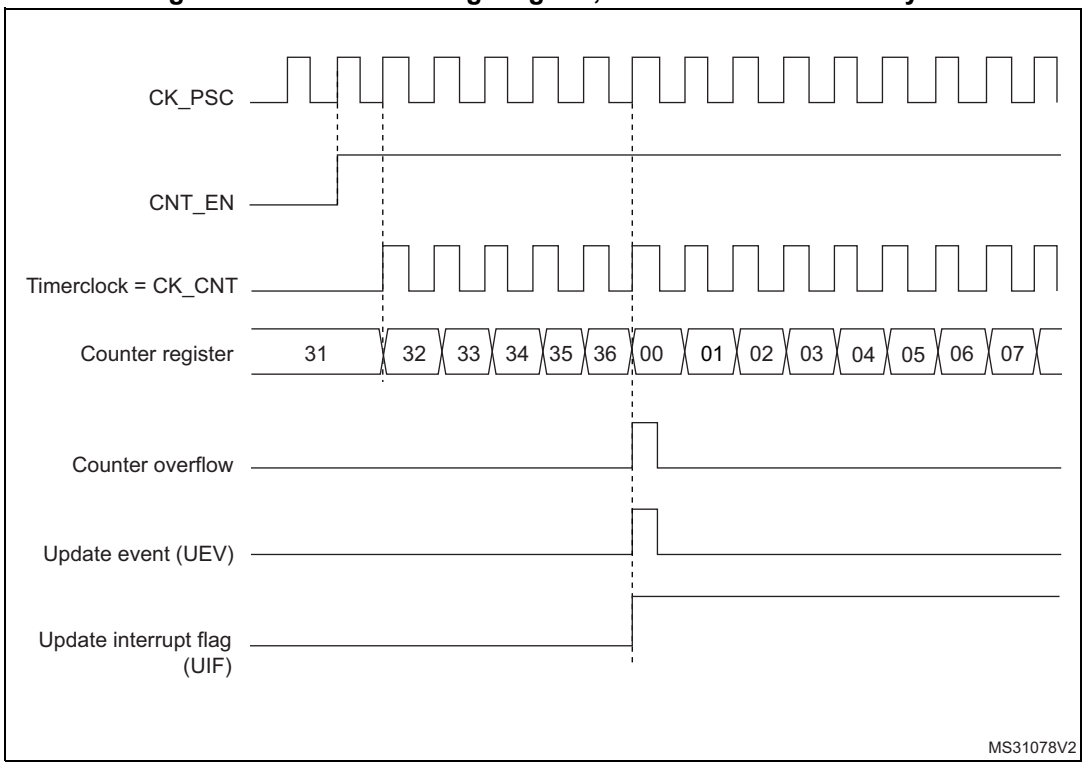

Figure 160. Counter timing diagram, internal clock divided by 2

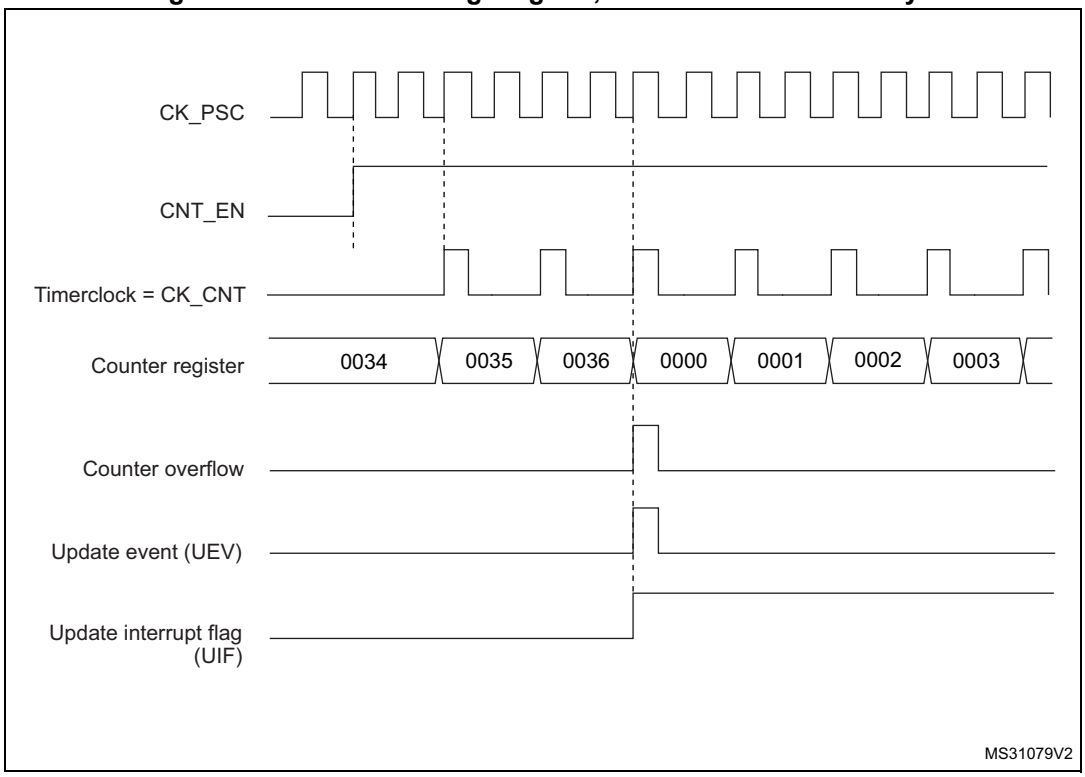

Figure 161. Counter timing diagram, internal clock divided by 4

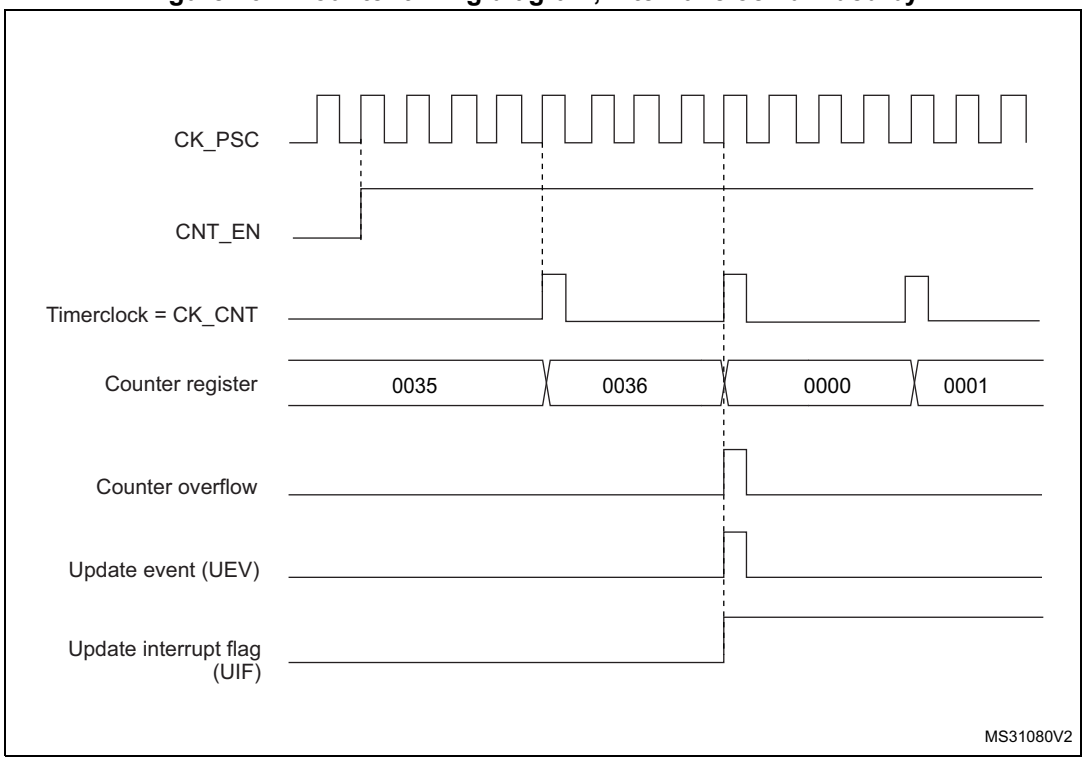

Figure 162. Counter timing diagram, internal clock divided by N

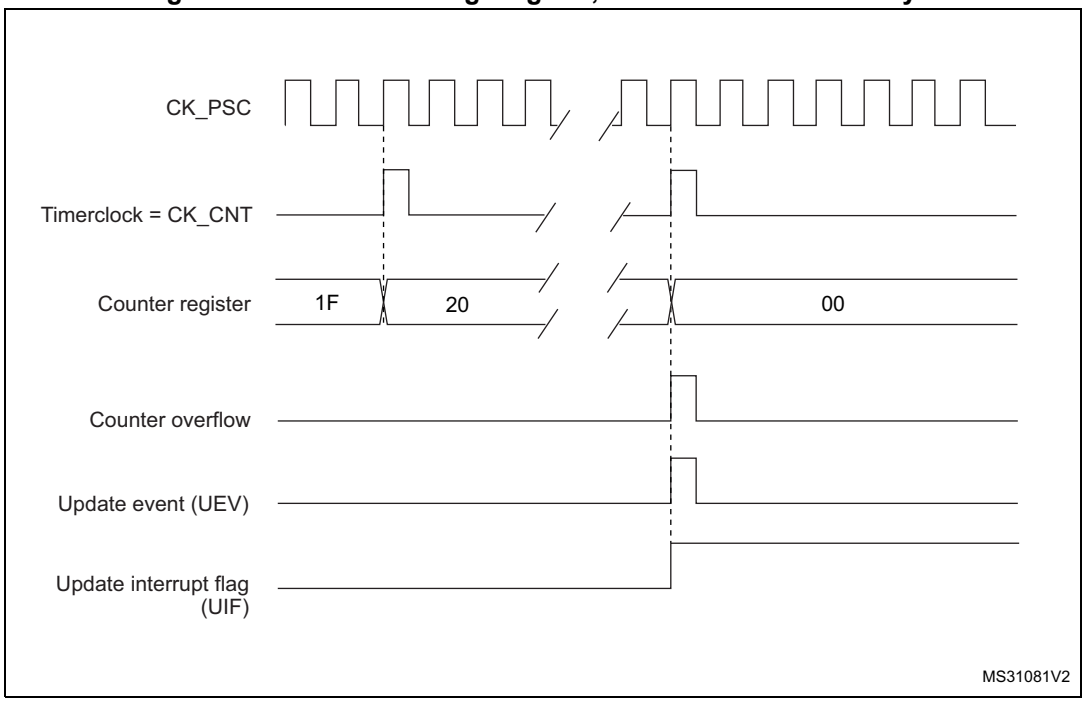

Figure 163. Counter timing diagram, Update event when ARPE=0 (TIMx_ARR not preloaded)

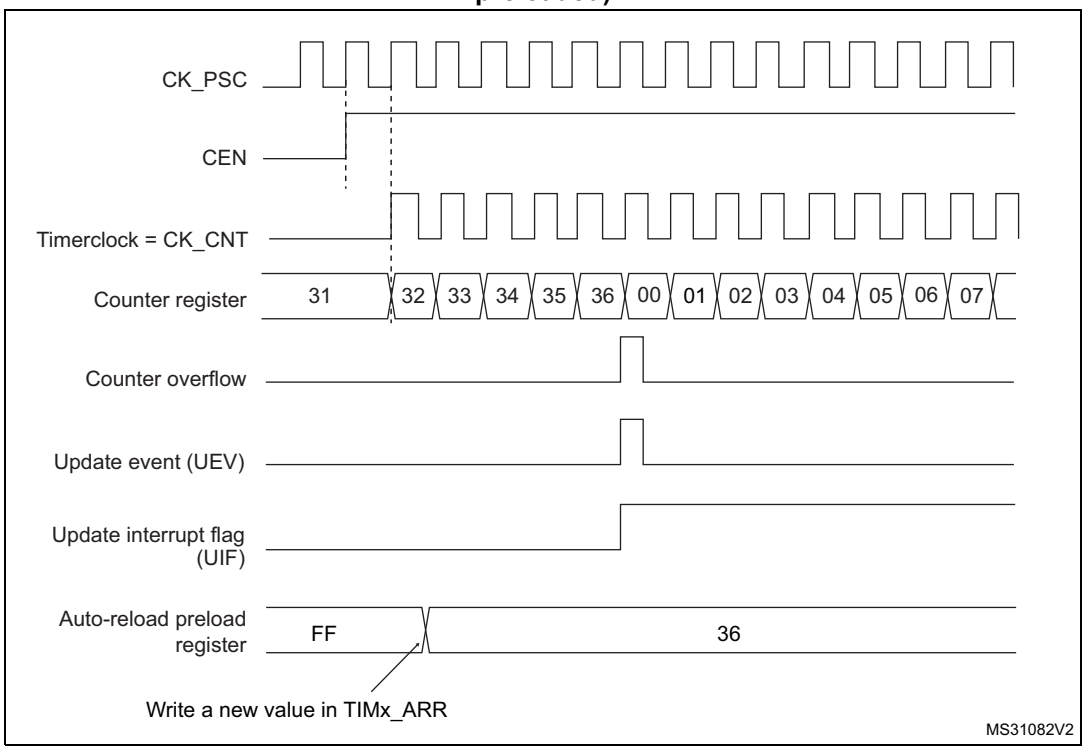

Figure 164. Counter timing diagram, Update event when ARPE=1 (TIMx_ARR preloaded)

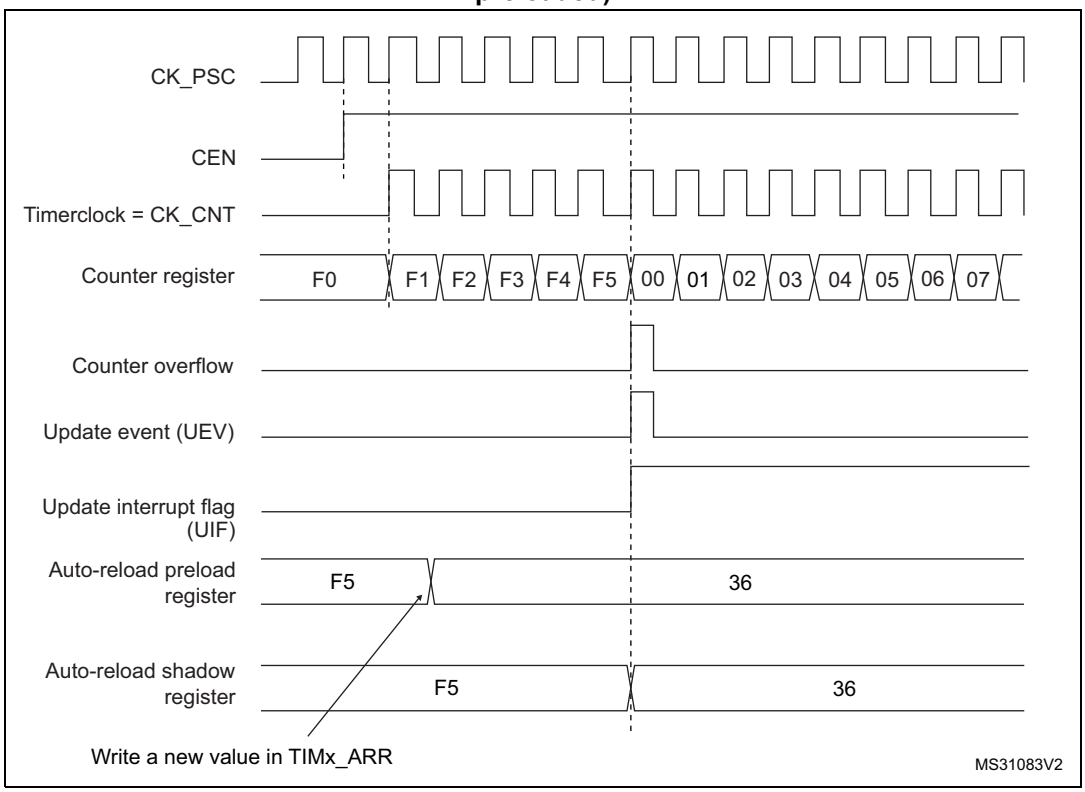

Downcounting mode

In downcounting mode, the counter counts from the auto-reload value (content of the TIMx_ARR register) down to 0, then restarts from the auto-reload value and generates a counter underflow event.

An Update event can be generate at each counter underflow or by setting the UG bit in the TIMx_EGR register (by software or by using the slave mode controller)

The UEV update event can be disabled by software by setting the UDIS bit in TIMx_CR1 register. This is to avoid updating the shadow registers while writing new values in the preload registers. Then no update event occurs until UDIS bit has been written to 0. However, the counter restarts from the current auto-reload value, whereas the counter of the prescaler restarts from 0 (but the prescale rate doesn't change).

In addition, if the URS bit (update request selection) in TIMx_CR1 register is set, setting the UG bit generates an update event UEV but without setting the UIF flag (thus no interrupt or DMA request is sent). This is to avoid generating both update and capture interrupts when clearing the counter on the capture event.

When an update event occurs, all the registers are updated and the update flag (UIF bit in TIMx_SR register) is set (depending on the URS bit):

- The buffer of the prescaler is reloaded with the preload value (content of the TIMx_PSC register).
- The auto-reload active register is updated with the preload value (content of the TIMx_ARR register). Note that the auto-reload is updated before the counter is reloaded, so that the next period is the expected one.

The following figures show some examples of the counter behavior for different clock frequencies when TIMx_ARR=0x36.

Figure 165. Counter timing diagram, internal clock divided by 1

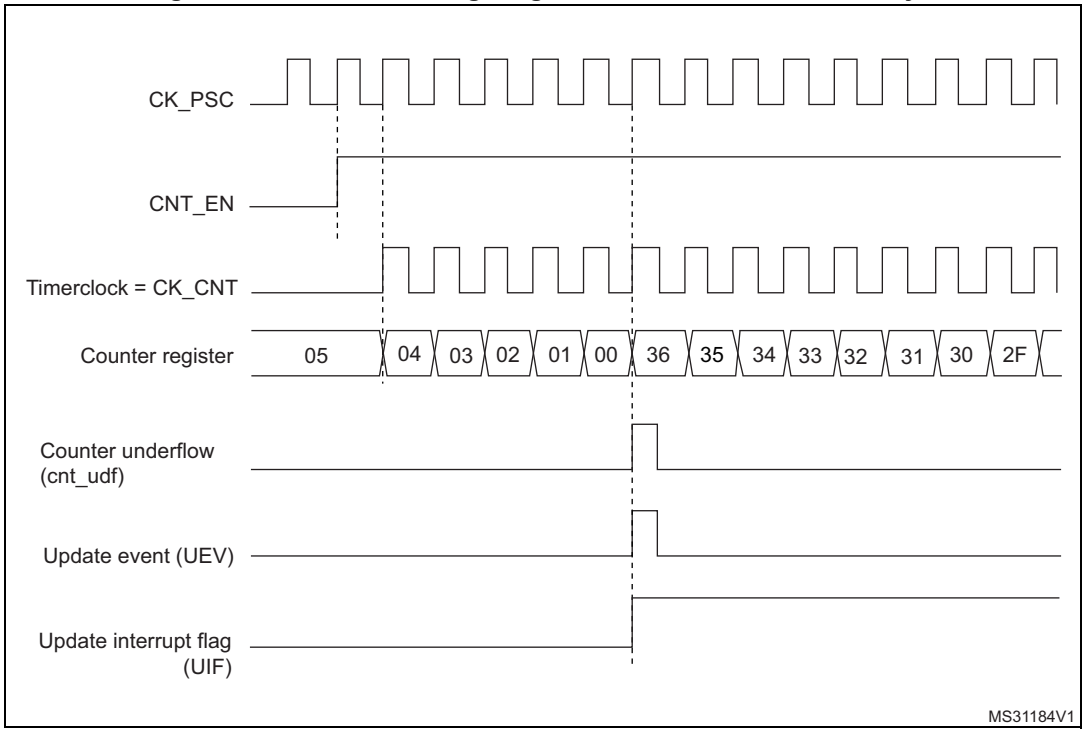

Figure 166. Counter timing diagram, internal clock divided by 2

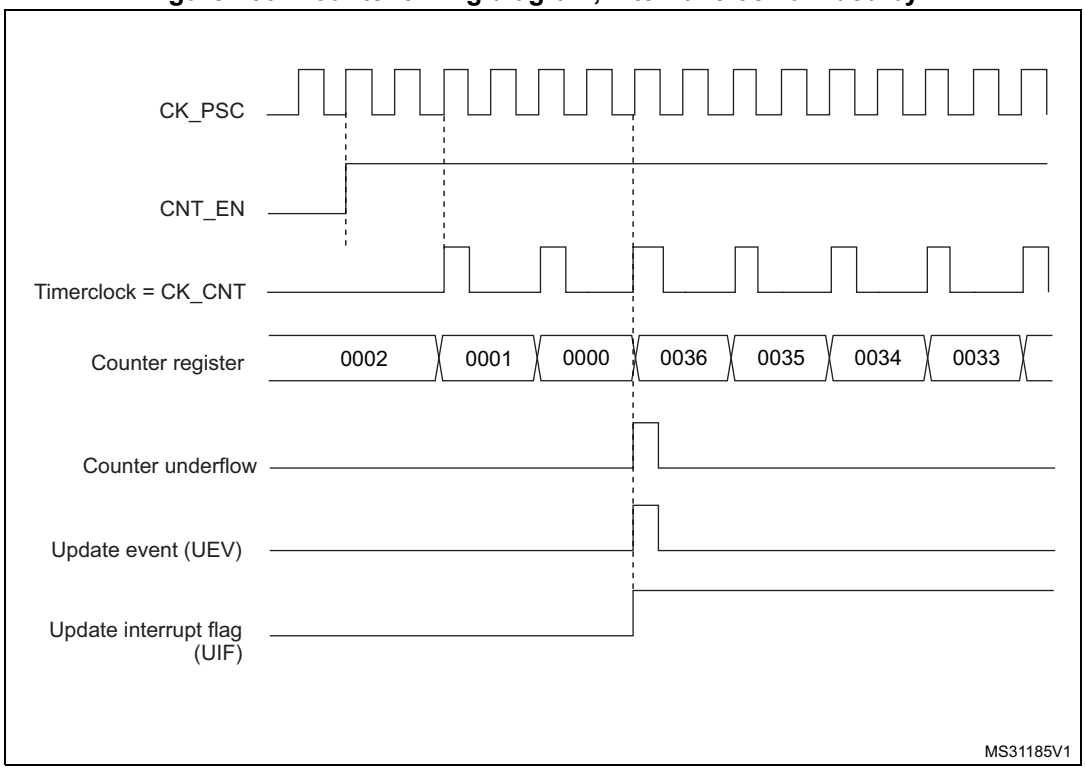

Figure 167. Counter timing diagram, internal clock divided by 4

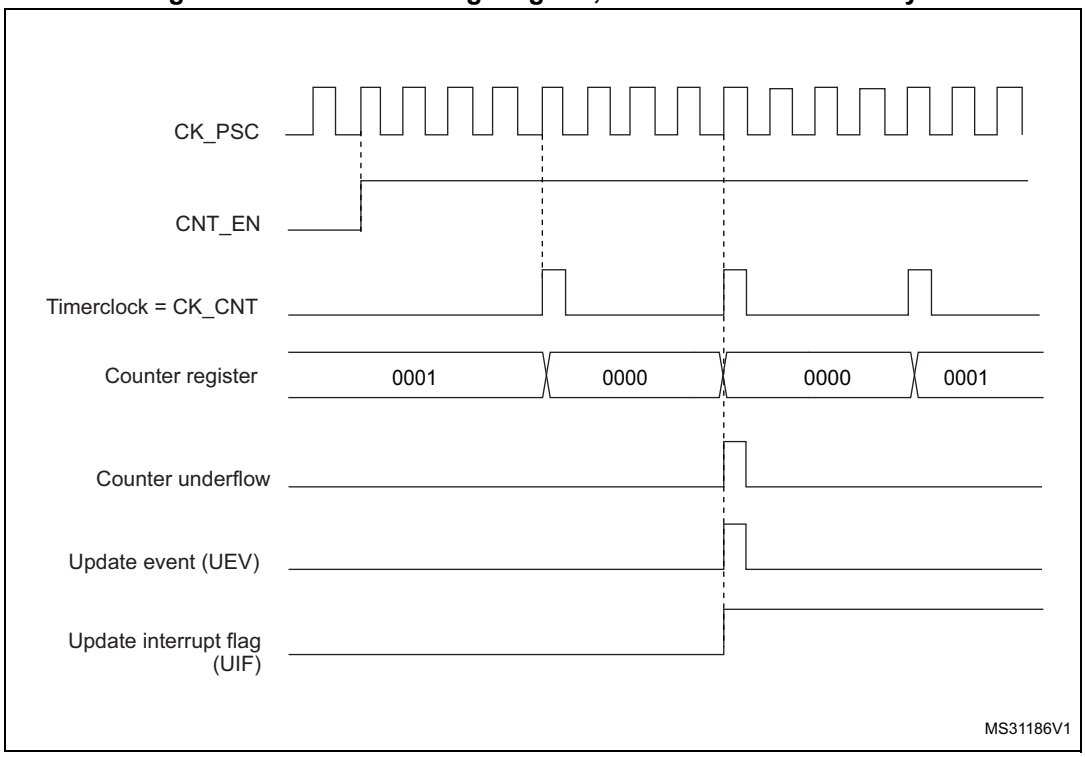

Figure 168. Counter timing diagram, internal clock divided by N

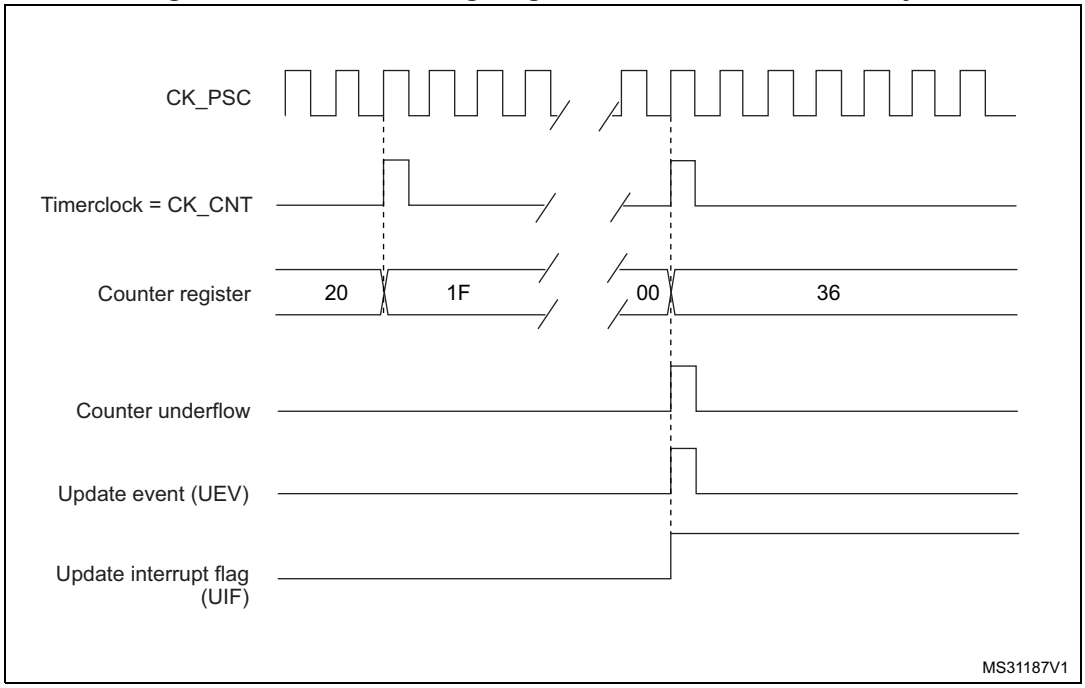

Figure 169. Counter timing diagram, Update event

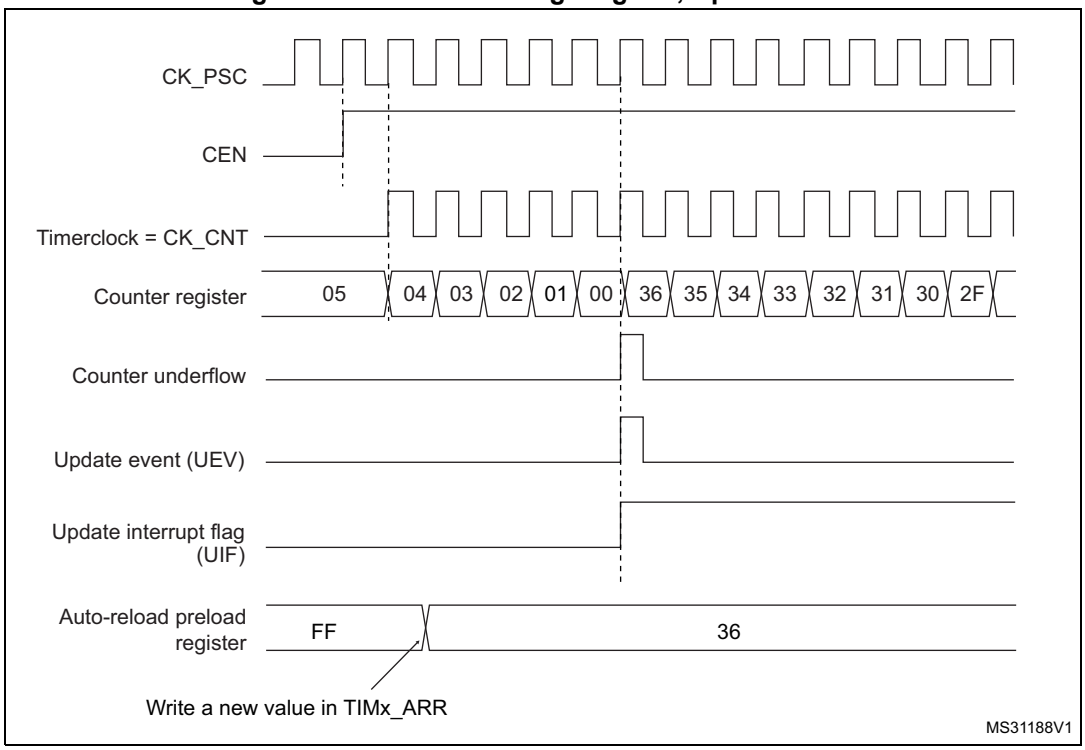

Center-aligned mode (up/down counting)

In center-aligned mode, the counter counts from 0 to the auto-reload value (content of the TIMx_ARR register) – 1, generates a counter overflow event, then counts from the auto-reload value down to 1 and generates a counter underflow event. Then it restarts counting from 0.

Center-aligned mode is active when the CMS bits in TIMx_CR1 register are not equal to '00'. The Output compare interrupt flag of channels configured in output is set when: the counter counts down (Center aligned mode 1, CMS = "01"), the counter counts up (Center aligned mode 2, CMS = "10") the counter counts up and down (Center aligned mode 3, CMS = "11").

In this mode, the direction bit (DIR from TIMx_CR1 register) cannot be written. It is updated by hardware and gives the current direction of the counter.

The update event can be generated at each counter overflow and at each counter underflow or by setting the UG bit in the TIMx_EGR register (by software or by using the slave mode controller) also generates an update event. In this case, the counter restarts counting from 0, as well as the counter of the prescaler.

The UEV update event can be disabled by software by setting the UDIS bit in TIMx_CR1 register. This is to avoid updating the shadow registers while writing new values in the preload registers. Then no update event occurs until the UDIS bit has been written to 0. However, the counter continues counting up and down, based on the current auto-reload value.

In addition, if the URS bit (update request selection) in TIMx_CR1 register is set, setting the UG bit generates an update event UEV but without setting the UIF flag (thus no interrupt or

DMA request is sent). This is to avoid generating both update and capture interrupt when clearing the counter on the capture event.

When an update event occurs, all the registers are updated and the update flag (UIF bit in TIMx_SR register) is set (depending on the URS bit):

- The buffer of the prescaler is reloaded with the preload value (content of the TIMx_PSC register).
- The auto-reload active register is updated with the preload value (content of the TIMx_ARR register). Note that if the update source is a counter overflow, the auto-reload is updated before the counter is reloaded, so that the next period is the expected one (the counter is loaded with the new value).

The following figures show some examples of the counter behavior for different clock frequencies.

Figure 170. Counter timing diagram, internal clock divided by 1, TIMx_ARR=0x6

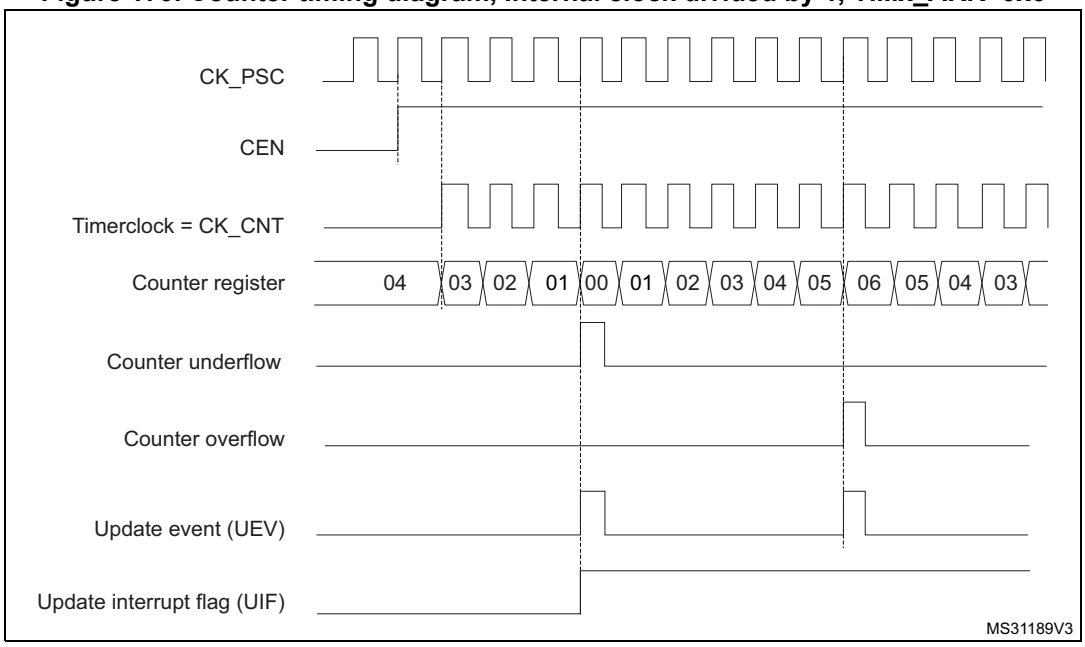

1. Here, center-aligned mode 1 is used (for more details refer to *Section 22.4.1: TIM2 control register 1 (TIM2_CR1) on page 666*).

Figure 171. Counter timing diagram, internal clock divided by 2

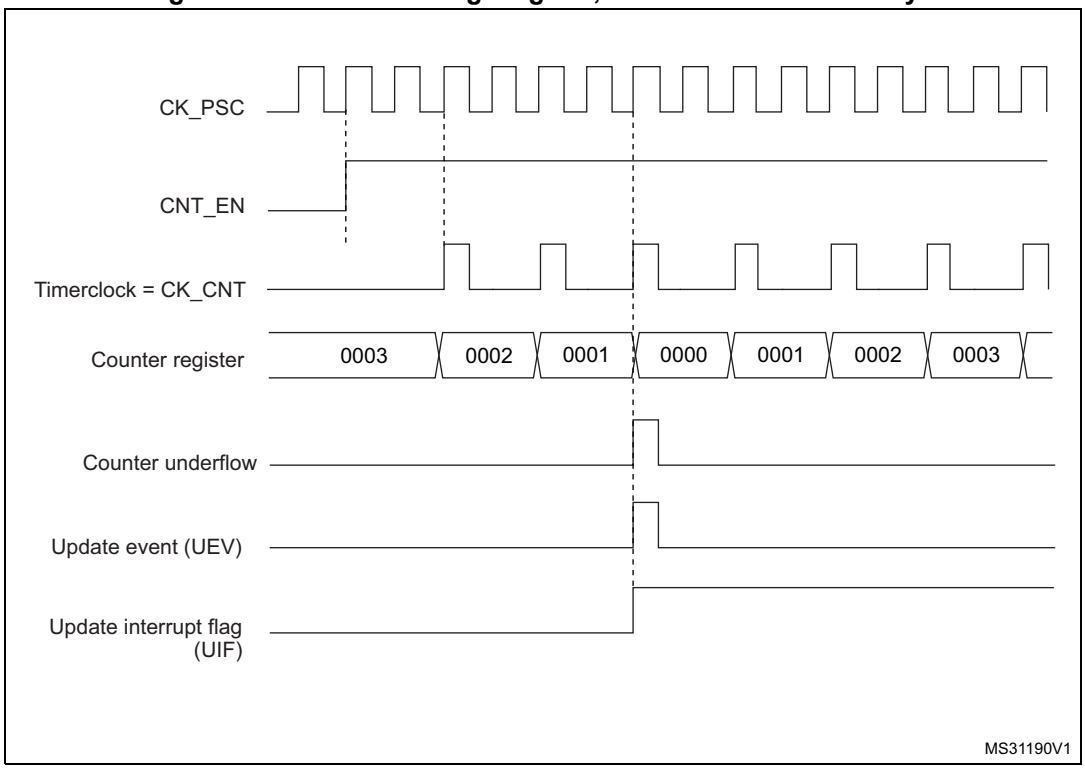

Figure 172. Counter timing diagram, internal clock divided by 4, TIMx_ARR=0x36

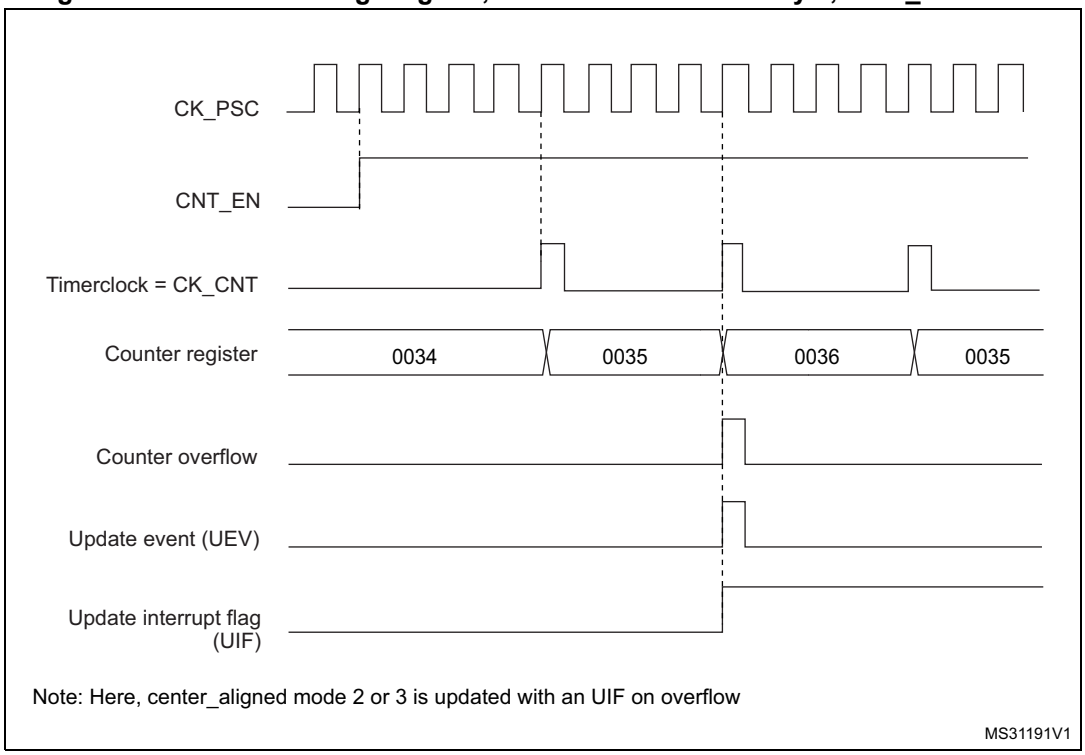

1. Center-aligned mode 2 or 3 is used with an UIF on overflow.

Figure 173. Counter timing diagram, internal clock divided by N

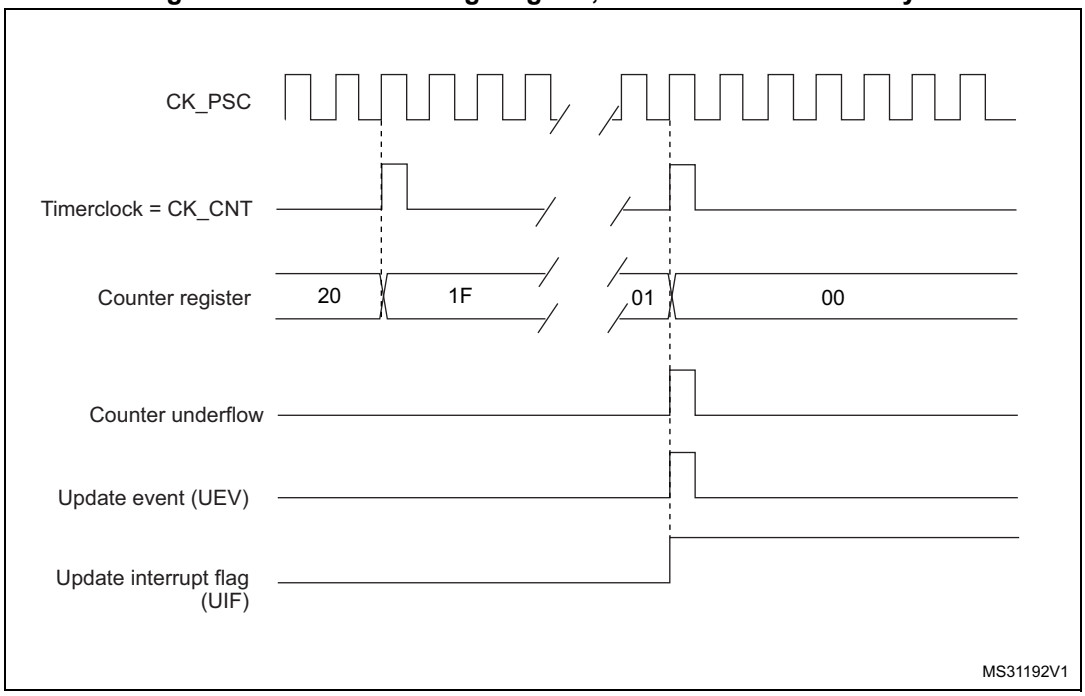

Figure 174. Counter timing diagram, Update event with ARPE=1 (counter underflow)

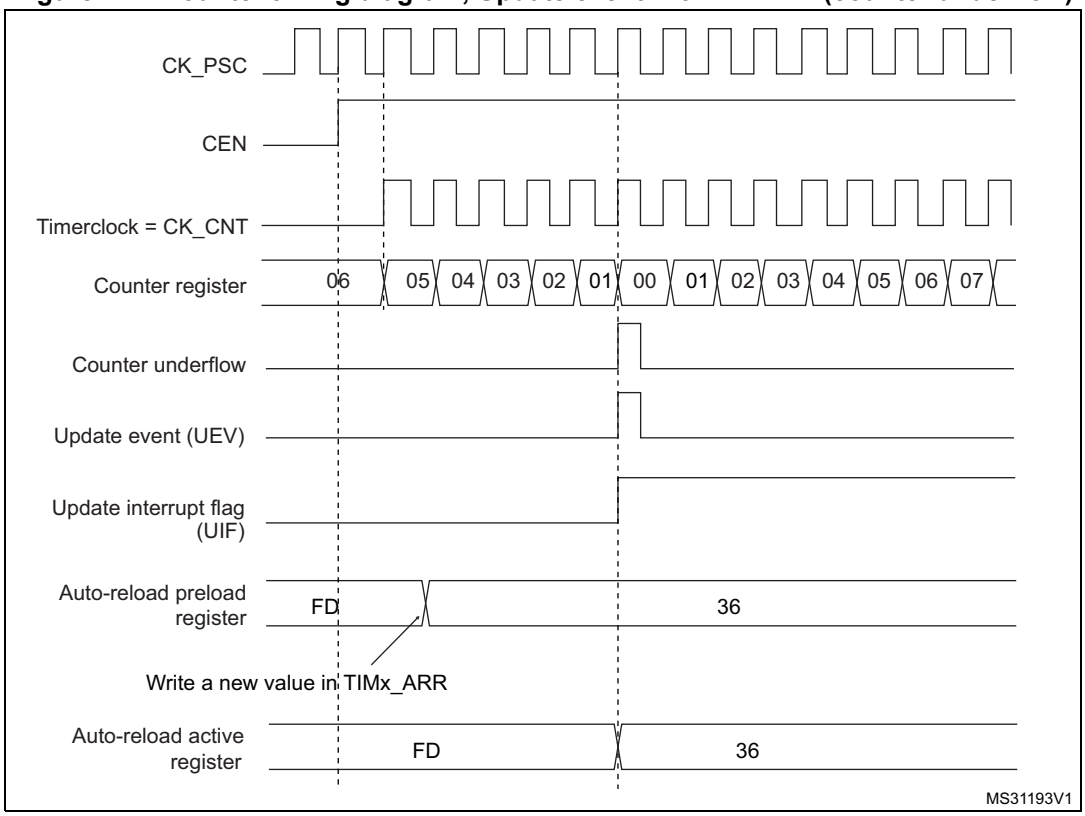

Figure 175. Counter timing diagram, Update event with ARPE=1 (counter overflow)

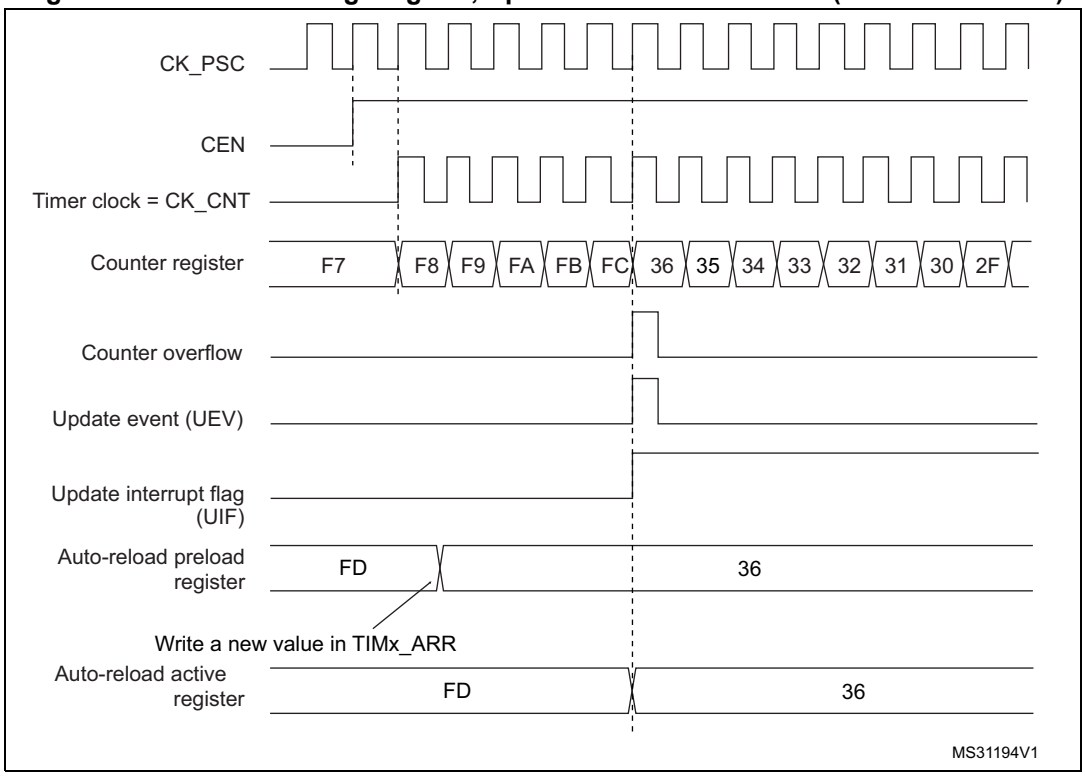

22.3.3 Clock selection

The counter clock can be provided by the following clock sources:

- Internal clock (CK_INT)
- External clock mode1: external input pin (TIx)
- External clock mode2: external trigger input (ETR)
- Internal trigger inputs (ITRx): using one timer as prescaler for another timer, for example, Timer X can be configured to act as a prescaler for Timer Y. Refer to *: Using one timer as prescaler for another timer on page 660* for more details.

Internal clock source (CK_INT)

If the slave mode controller is disabled (SMS=000 in the TIMx_SMCR register), then the CEN, DIR (in the TIMx_CR1 register) and UG bits (in the TIMx_EGR register) are actual control bits and can be changed only by software (except UG which remains cleared automatically). As soon as the CEN bit is written to 1, the prescaler is clocked by the internal clock CK_INT.

Figure 176 shows the behavior of the control circuit and the upcounter in normal mode, without prescaler.

Figure 176. Control circuit in normal mode, internal clock divided by 1

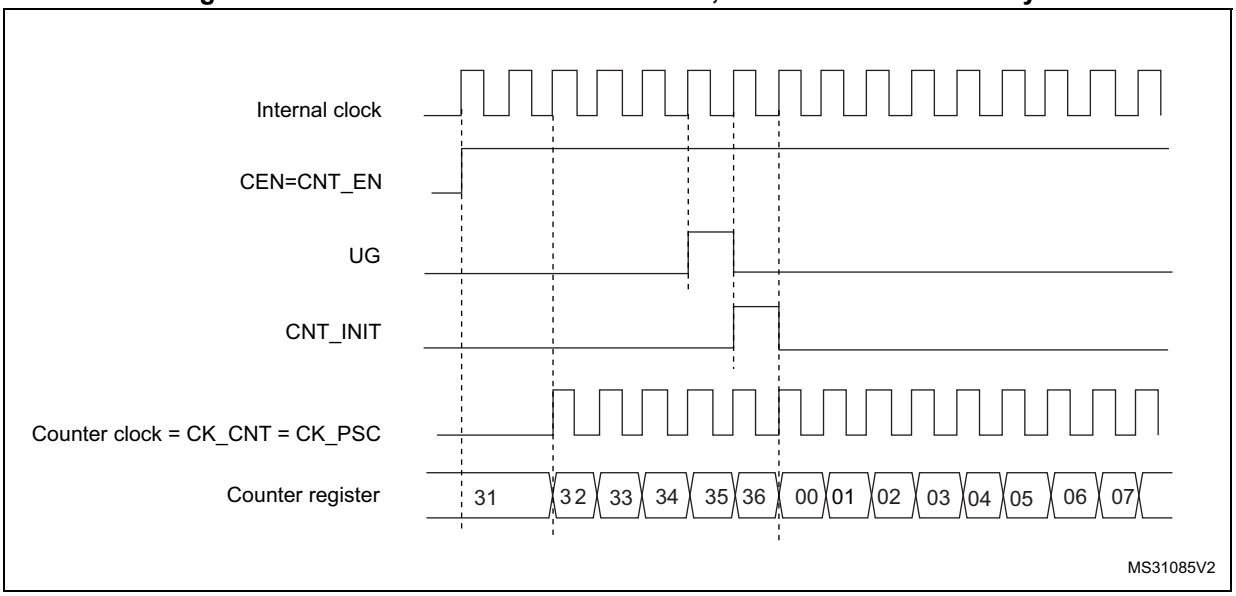

External clock source mode 1

This mode is selected when SMS=111 in the TIMx_SMCR register. The counter can count at each rising or falling edge on a selected input.

Figure 177. TI2 external clock connection example

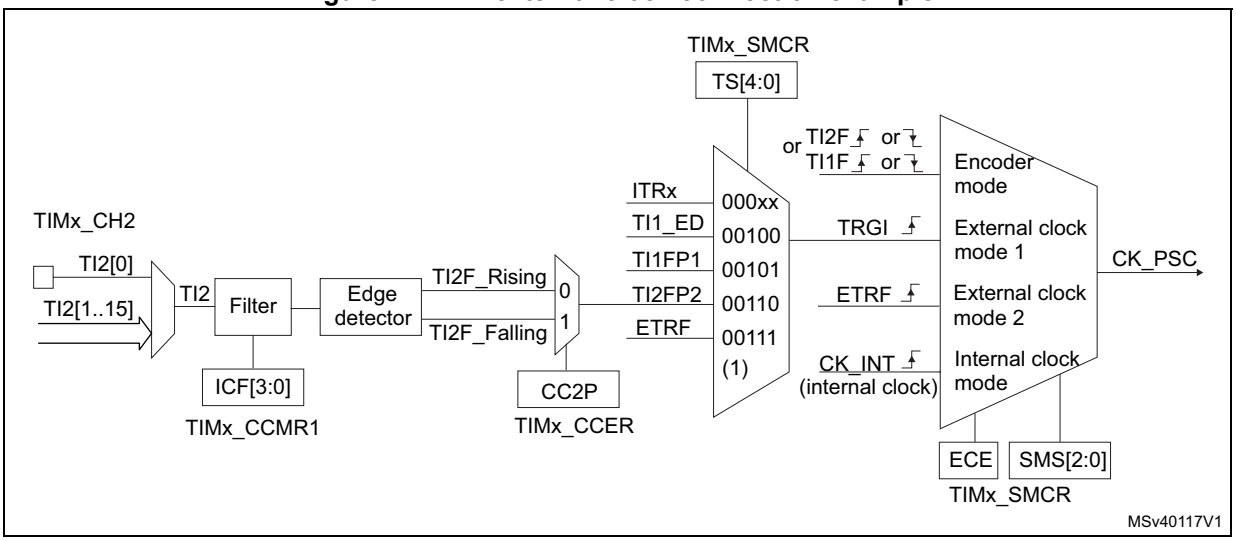

1. Codes ranging from 01000 to 11111: ITRy.

For example, to configure the upcounter to count in response to a rising edge on the TI2 input, use the following procedure:

1. Select the proper TI2x source (internal or external) with the TI2SEL[3:0] bits in the TIMx_TISEL register.
2. Configure channel 2 to detect rising edges on the TI2 input by writing CC2S= ‘01 in the TIMx_CCMR1 register.
3. Configure the input filter duration by writing the IC2F[3:0] bits in the TIMx_CCMR1 register (if no filter is needed, keep IC2F=0000).

Note: The capture prescaler is not used for triggering, so it does not need to be configured.

4. Select rising edge polarity by writing CC2P=0 and CC2NP=0 and CC2NP=0 in the TIMx_CCER register.
5. Configure the timer in external clock mode 1 by writing SMS=111 in the TIMx_SMCR register.
6. Select TI2 as the input source by writing TS=00110 in the TIMx_SMCR register.
7. Enable the counter by writing CEN=1 in the TIMx_CR1 register.

When a rising edge occurs on TI2, the counter counts once and the TIF flag is set.

The delay between the rising edge on TI2 and the actual clock of the counter is due to the resynchronization circuit on TI2 input.

Figure 178. Control circuit in external clock mode 1

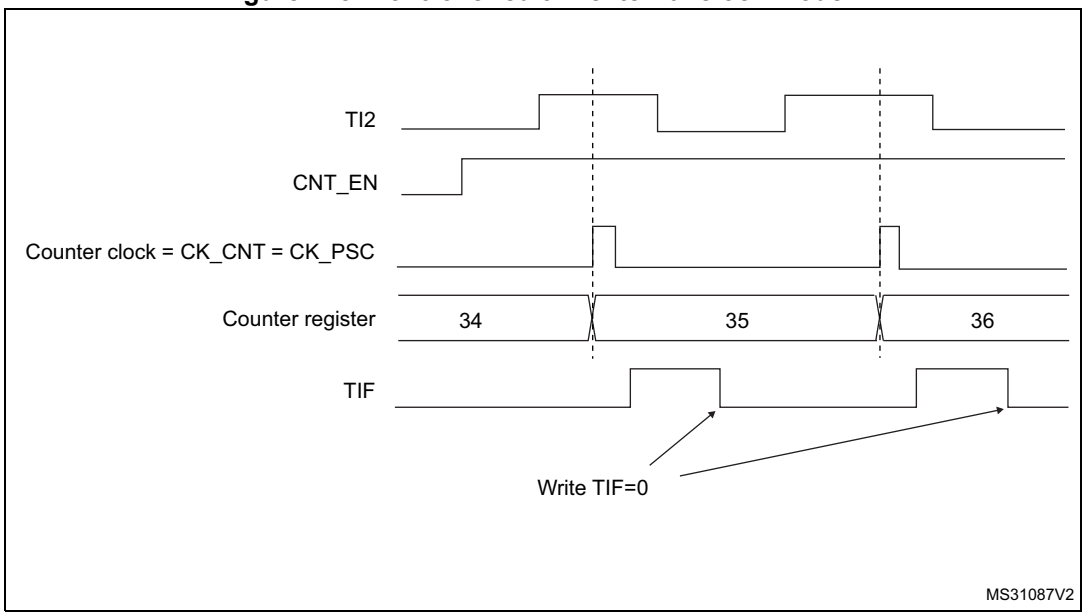

External clock source mode 2

This mode is selected by writing ECE=1 in the TIMx_SMCR register.

The counter can count at each rising or falling edge on the external trigger input ETR.

Figure 179 gives an overview of the external trigger input block.

Figure 179. External trigger input block

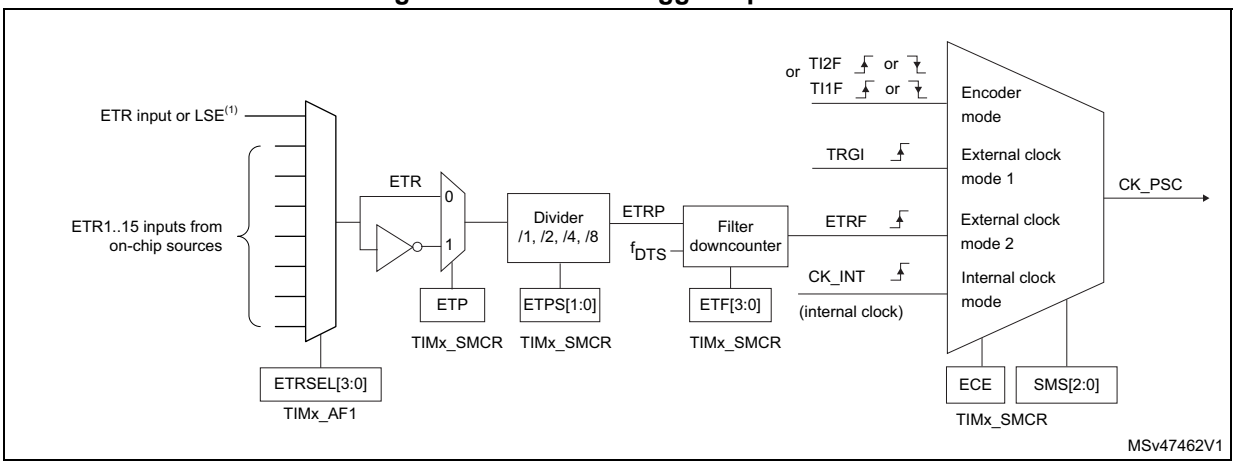

1. As per ETR_RMP bit programming.

For example, to configure the upcounter to count each 2 rising edges on ETR, use the following procedure:

1. Select the proper ETR source (internal or external) with the ETRSEL[3:0] bits in the TIMx_AF1 register and the ETR_RMP bit in the TIM2_OR1 register.
2. As no filter is needed in this example, write ETF[3:0]=0000 in the TIMx_SMCR register.
3. Set the prescaler by writing ETPS[1:0]=01 in the TIMx_SMCR register
4. Select rising edge detection on the ETR pin by writing ETP=0 in the TIMx_SMCR register
5. Enable external clock mode 2 by writing ECE=1 in the TIMx_SMCR register.
6. Enable the counter by writing CEN=1 in the TIMx_CR1 register.

The counter counts once each 2 ETR rising edges.

The delay between the rising edge on ETR and the actual clock of the counter is due to the resynchronization circuit on the ETRP signal. As a consequence, the maximum frequency which can be correctly captured by the counter is at most ¼ of TIMxCLK frequency. When the ETRP signal is faster, the user should apply a division of the external signal by a proper ETPS prescaler setting.

Figure 180. Control circuit in external clock mode 2

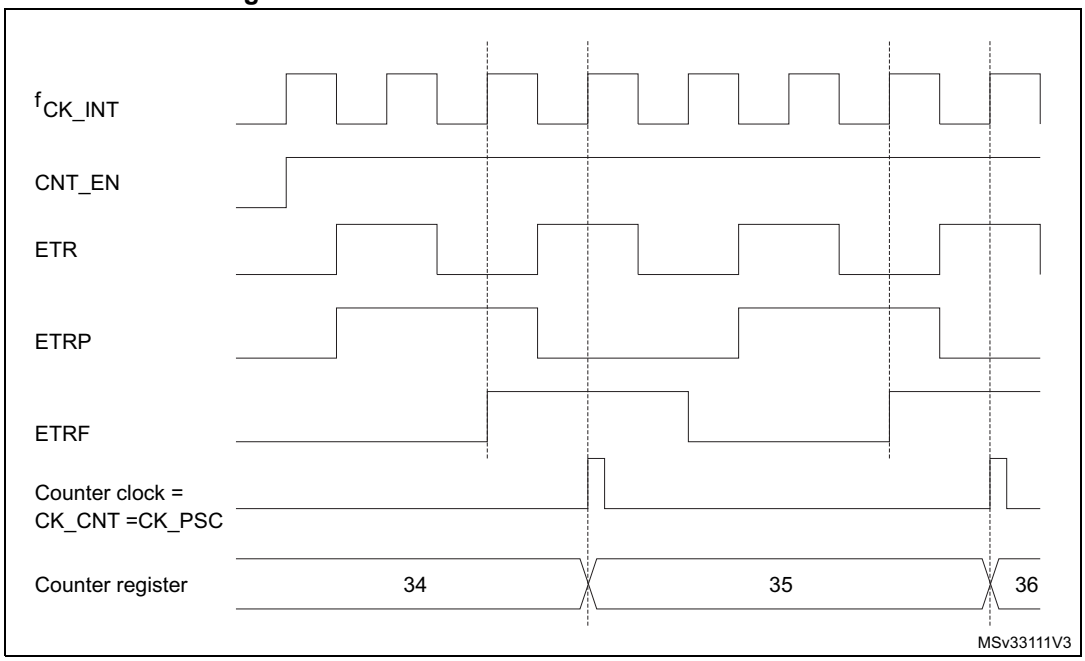

22.3.4 Capture/Compare channels

Each Capture/Compare channel is built around a capture/compare register (including a shadow register), a input stage for capture (with digital filter, multiplexing and prescaler) and an output stage (with comparator and output control).

The following figure gives an overview of one Capture/Compare channel.

The input stage samples the corresponding TIx input to generate a filtered signal TIxF. Then, an edge detector with polarity selection generates a signal (TIxFPx) which can be used as trigger input by the slave mode controller or as the capture command. It is prescaled before the capture register (ICxPS).

Figure 181. Capture/Compare channel (example: channel 1 input stage)

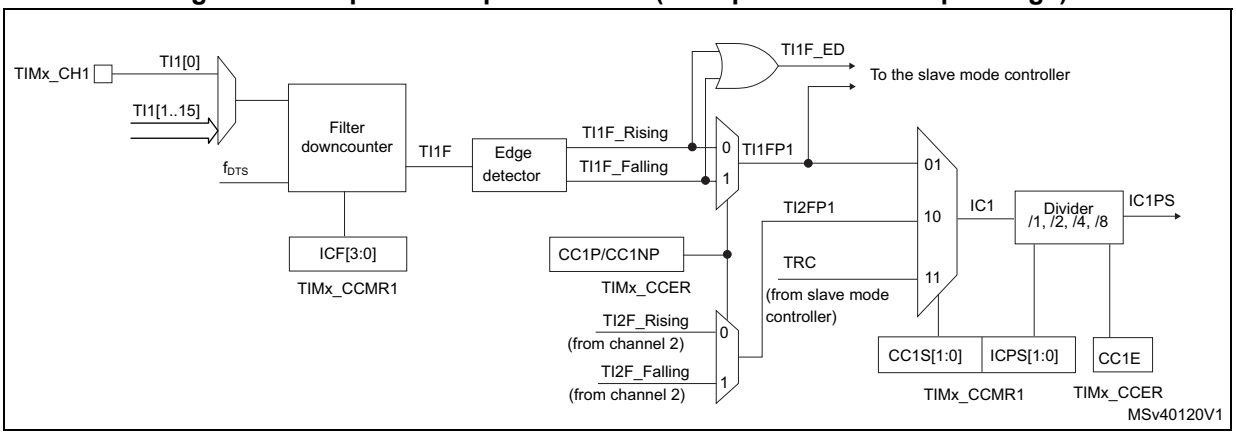

The output stage generates an intermediate waveform which is then used for reference: OCxRef (active high). The polarity acts at the end of the chain.

Figure 182. Capture/Compare channel 1 main circuit

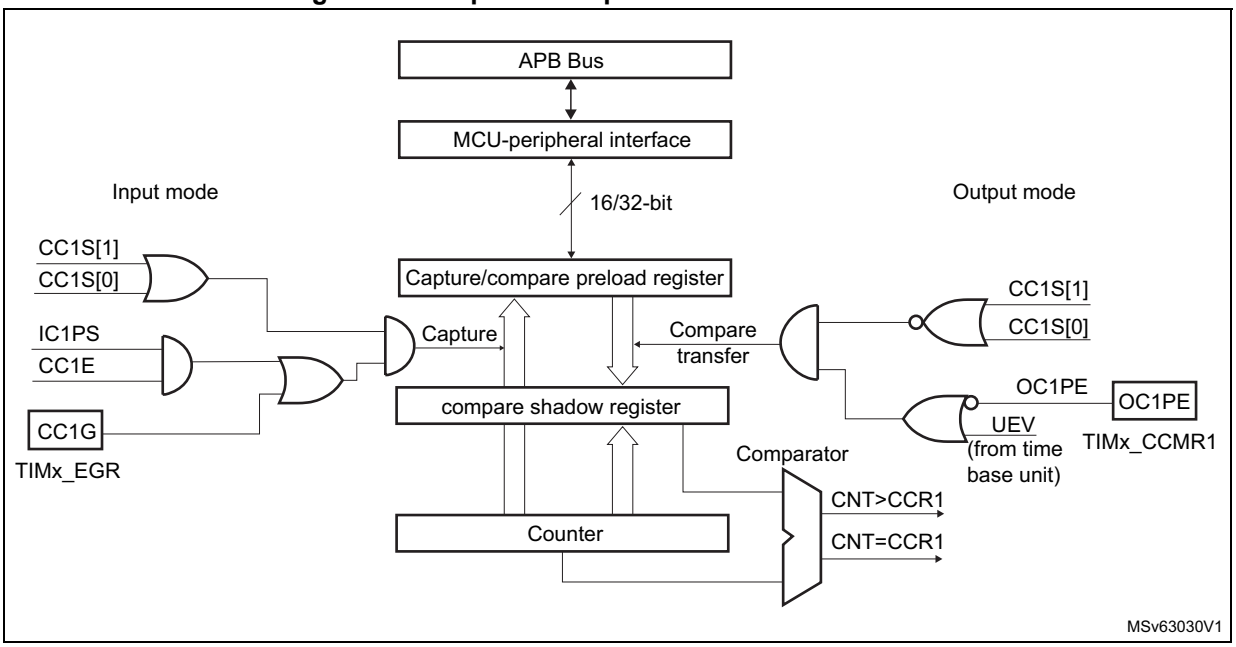

Figure 183. Output stage of Capture/Compare channel (channel 1)

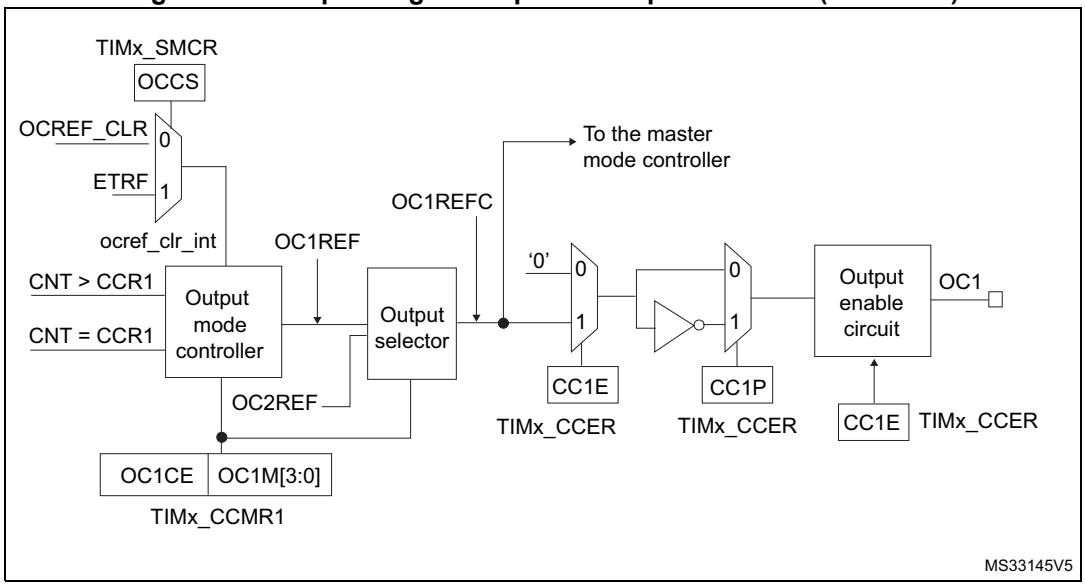

The capture/compare block is made of one preload register and one shadow register. Write and read always access the preload register.

In capture mode, captures are actually done in the shadow register, which is copied into the preload register.

In compare mode, the content of the preload register is copied into the shadow register which is compared to the counter.

22.3.5 Input capture mode

In Input capture mode, the Capture/Compare Registers (TIMx_CCRx) are used to latch the value of the counter after a transition detected by the corresponding ICx signal. When a capture occurs, the corresponding CCXIF flag (TIMx_SR register) is set and an interrupt or a DMA request can be sent if they are enabled. If a capture occurs while the CCxIF flag was already high, then the over-capture flag CCxOF (TIMx_SR register) is set. CCxIF can be cleared by software by writing it to 0 or by reading the captured data stored in the TIMx_CCRx register. CCxOF is cleared when it is written with 0.

The following example shows how to capture the counter value in TIMx_CCR1 when TI1 input rises. To do this, use the following procedure:

1. Select the proper TI1x source (internal or external) with the TI1SEL[3:0] bits in the TIMx_TISEL register.
2. Select the active input: TIMx_CCR1 must be linked to the TI1 input, so write the CC1S bits to 01 in the TIMx_CCMR1 register. As soon as CC1S becomes different from 00, the channel is configured in input and the TIMx_CCR1 register becomes read-only.
3. Program the appropriate input filter duration in relation with the signal connected to the timer (when the input is one of the TIx (ICxF bits in the TIMx_CCMRx register). Let's imagine that, when toggling, the input signal is not stable during at must 5 internal clock cycles. We must program a filter duration longer than these 5 clock cycles. We can validate a transition on TI1 when 8 consecutive samples with the new level have been detected (sampled at f_{DTS} frequency). Then write IC1F bits to 0011 in the TIMx_CCMR1 register.
4. Select the edge of the active transition on the TI1 channel by writing the CC1P and CC1NP and CC1NP bits to 000 in the TIMx_CCER register (rising edge in this case).
5. Program the input prescaler. In our example, we wish the capture to be performed at each valid transition, so the prescaler is disabled (write IC1PS bits to 00 in the TIMx_CCMR1 register).
6. Enable capture from the counter into the capture register by setting the CC1E bit in the TIMx_CCER register.
7. If needed, enable the related interrupt request by setting the CC1IE bit in the TIMx_DIER register, and/or the DMA request by setting the CC1DE bit in the TIMx_DIER register.

When an input capture occurs:

- The TIMx_CCR1 register gets the value of the counter on the active transition.
- CC1IF flag is set (interrupt flag). CC1OF is also set if at least two consecutive captures occurred whereas the flag was not cleared.
- An interrupt is generated depending on the CC1IE bit.
- A DMA request is generated depending on the CC1DE bit.

In order to handle the overcapture, it is recommended to read the data before the overcapture flag. This is to avoid missing an overcapture which could happen after reading the flag and before reading the data.

Note: IC interrupt and/or DMA requests can be generated by software by setting the corresponding CCxG bit in the TIMx_EGR register.

22.3.6 PWM input mode

This mode is a particular case of input capture mode. The procedure is the same except:

- Two ICx signals are mapped on the same TIx input.
- These 2 ICx signals are active on edges with opposite polarity.
- One of the two TIxFP signals is selected as trigger input and the slave mode controller is configured in reset mode.

For example, one can measure the period (in TIMx_CCR1 register) and the duty cycle (in TIMx_CCR2 register) of the PWM applied on TI1 using the following procedure (depending on CK_INT frequency and prescaler value):

1. Select the proper TI1x source (internal or external) with the TI1SEL[3:0] bits in the TIMx_TISEL register.
2. Select the active input for TIMx_CCR1: write the CC1S bits to 01 in the TIMx_CCMR1 register (TI1 selected).
3. Select the active polarity for TI1FP1 (used both for capture in TIMx_CCR1 and counter clear): write the CC1P to ‘0’ and the CC1NP bit to ‘0’ (active on rising edge).
4. Select the active input for TIMx_CCR2: write the CC2S bits to 10 in the TIMx_CCMR1 register (TI1 selected).
5. Select the active polarity for TI1FP2 (used for capture in TIMx_CCR2): write the CC2P bit to ‘1’ and the CC2NP bit to ’0’ (active on falling edge).
6. Select the valid trigger input: write the TS bits to 00101 in the TIMx_SMCR register (TI1FP1 selected).
7. Configure the slave mode controller in reset mode: write the SMS bits to 100 in the TIMx_SMCR register.
8. Enable the captures: write the CC1E and CC2E bits to ‘1 in the TIMx_CCER register.

Figure 184. PWM input mode timing

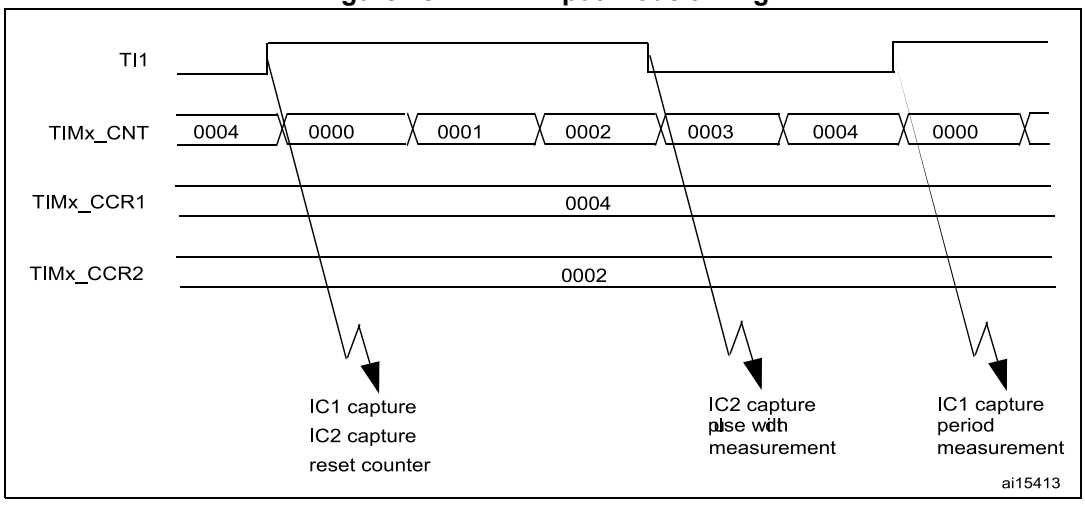

1. The PWM input mode can be used only with the TIMx_CH1/TIMx_CH2 signals due to the fact that only TI1FP1 and TI2FP2 are connected to the slave mode controller.

22.3.7 Forced output mode

In output mode (CCxS bits = 00 in the TIMx_CCMRx register), each output compare signal (OCxREF and then OCx) can be forced to active or inactive level directly by software, independently of any comparison between the output compare register and the counter.

To force an output compare signal (ocxref/OCx) to its active level, one just needs to write 101 in the OCxM bits in the corresponding TIMx_CCMRx register. Thus ocxref is forced high (OCxREF is always active high) and OCx get opposite value to CCxP polarity bit.

e.g.: CCxP=0 (OCx active high) => OCx is forced to high level.

ocxref signal can be forced low by writing the OCxM bits to 100 in the TIMx_CCMRx register.

Anyway, the comparison between the TIMx_CCRx shadow register and the counter is still performed and allows the flag to be set. Interrupt and DMA requests can be sent accordingly. This is described in the Output Compare Mode section.

22.3.8 Output compare mode

This function is used to control an output waveform or indicating when a period of time has elapsed.

When a match is found between the capture/compare register and the counter, the output compare function:

- Assigns the corresponding output pin to a programmable value defined by the output compare mode (OCxM bits in the TIMx_CCMRx register) and the output polarity (CCxP bit in the TIMx_CCER register). The output pin can keep its level (OCXM=000), be set active (OCxM=001), be set inactive (OCxM=010) or can toggle (OCxM=011) on match.
- Sets a flag in the interrupt status register (CCxIF bit in the TIMx_SR register).
- Generates an interrupt if the corresponding interrupt mask is set (CCXIE bit in the TIMx_DIER register).
- Sends a DMA request if the corresponding enable bit is set (CCxDE bit in the TIMx_DIER register, CCDS bit in the TIMx_CR2 register for the DMA request selection).

The TIMx_CCRx registers can be programmed with or without preload registers using the OCxPE bit in the TIMx_CCMRx register.

In output compare mode, the update event UEV has no effect on ocxref and OCx output. The timing resolution is one count of the counter. Output compare mode can also be used to output a single pulse (in One-pulse mode).

Procedure

1. Select the counter clock (internal, external, prescaler).
2. Write the desired data in the TIMx_ARR and TIMx_CCRx registers.
3. Set the CCxIE and/or CCxDE bits if an interrupt and/or a DMA request is to be generated.
4. Select the output mode. For example, one must write OCxM=011, OCxPE=0, CCxP=0 and CCxE=1 to toggle OCx output pin when CNT matches CCRx, CCRx preload is not used, OCx is enabled and active high.
5. Enable the counter by setting the CEN bit in the TIMx_CR1 register.

The TIMx_CCRx register can be updated at any time by software to control the output waveform, provided that the preload register is not enabled (OCxPE=0, else TIMx_CCRx shadow register is updated only at the next update event UEV). An example is given in *Figure 185*.

Figure 185. Output compare mode, toggle on OC1

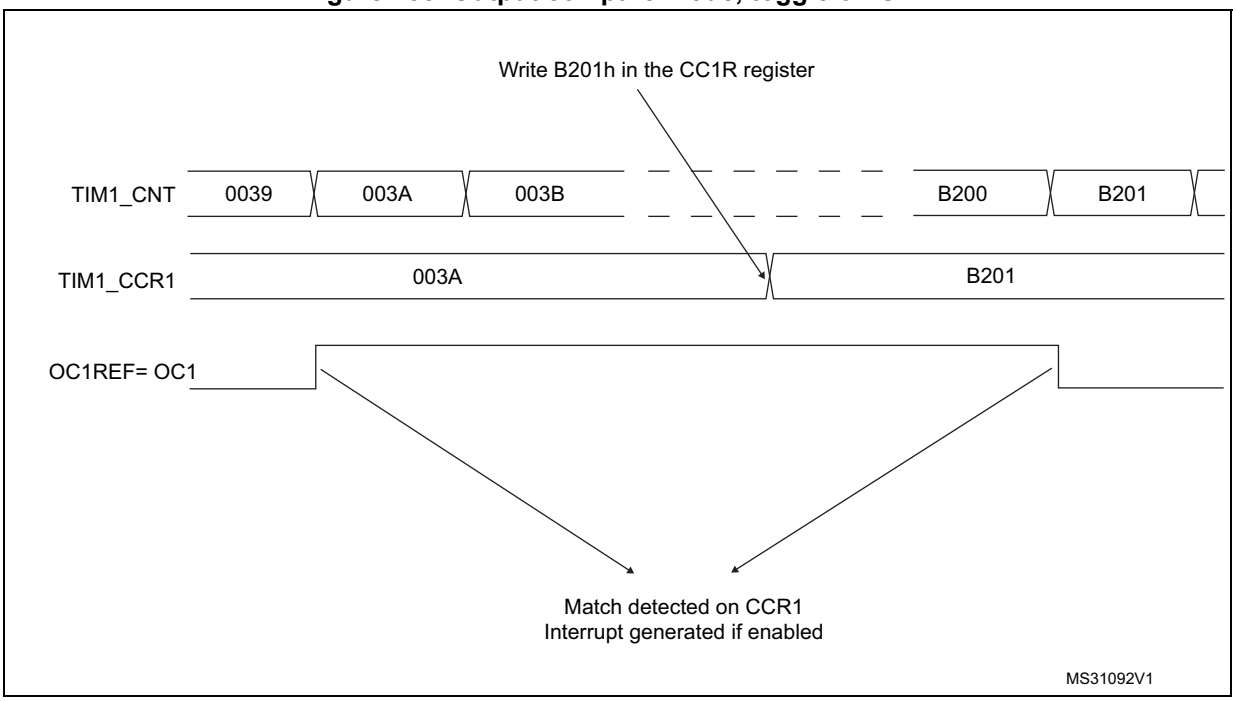

22.3.9 PWM mode

Pulse width modulation mode permits to generate a signal with a frequency determined by the value of the TIMx_ARR register and a duty cycle determined by the value of the TIMx_CCRx register.

The PWM mode can be selected independently on each channel (one PWM per OCx output) by writing 110 (PWM mode 1) or ‘111 (PWM mode 2) in the OCxM bits in the TIMx_CCMRx register. The corresponding preload register must be enabled by setting the OCxPE bit in the TIMx_CCMRx register, and eventually the auto-reload preload register (in upcounting or center-aligned modes) by setting the ARPE bit in the TIMx_CR1 register.

As the preload registers are transferred to the shadow registers only when an update event occurs, before starting the counter, all registers must be initialized by setting the UG bit in the TIMx_EGR register.

OCx polarity is software programmable using the CCxP bit in the TIMx_CCER register. It can be programmed as active high or active low. OCx output is enabled by the CCxE bit in the TIMx_CCER register. Refer to the TIMx_CCERx register description for more details.

In PWM mode (1 or 2), TIMx_CNT and TIMx_CCRx are always compared to determine whether TIMx_CCRx ≤ TIMx_CNT or TIMx_CNT ≤ TIMx_CCRx (depending on the direction of the counter). However, to comply with the OCREF_CLR functionality (OCREF can be

cleared by an external event through the ETR signal until the next PWM period), the OCREF signal is asserted only:

- When the result of the comparison or
- When the output compare mode (OCxM bits in TIMx_CCMRx register) switches from the “frozen” configuration (no comparison, OCxM=‘000) to one of the PWM modes (OCxM=‘110 or ‘111).

This forces the PWM by software while the timer is running.

The timer is able to generate PWM in edge-aligned mode or center-aligned mode depending on the CMS bits in the TIMx_CR1 register.

PWM edge-aligned mode

Upcounting configuration

Upcounting is active when the DIR bit in the TIMx_CR1 register is low. Refer to *Upcounting mode on page 625*.

In the following example, we consider PWM mode 1. The reference PWM signal OCxREF is high as long as TIMx_CNT <TIMx_CCRx else it becomes low. If the compare value in TIMx_CCRx is greater than the auto-reload value (in TIMx_ARR) then OCxREF is held at ‘1. If the compare value is 0 then OCxREF is held at ‘0. *Figure 186* shows some edge-aligned PWM waveforms in an example where TIMx_ARR=8.

Figure 186. Edge-aligned PWM waveforms (ARR=8)

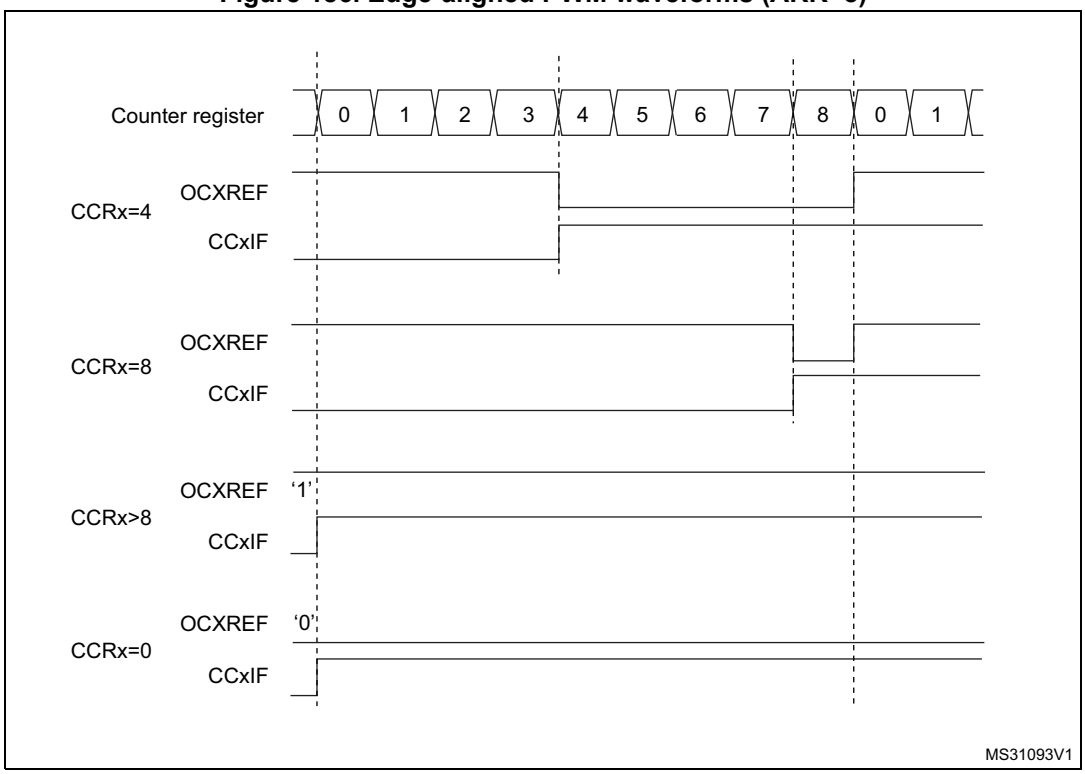

Downcounting configuration

Downcounting is active when DIR bit in TIMx_CR1 register is high. Refer to *Downcounting mode on page 628*.

In PWM mode 1, the reference signal ocxref is low as long as TIMx_CNT>TIMx_CCRx else it becomes high. If the compare value in TIMx_CCRx is greater than the auto-reload value in TIMx_ARR, then ocxref is held at 100%. PWM is not possible in this mode.

PWM center-aligned mode

Center-aligned mode is active when the CMS bits in TIMx_CR1 register are different from ‘00 (all the remaining configurations having the same effect on the ocxref/OCx signals). The compare flag is set when the counter counts up, when it counts down or both when it counts up and down depending on the CMS bits configuration. The direction bit (DIR) in the TIMx_CR1 register is updated by hardware and must not be changed by software. Refer to *Center-aligned mode (up/down counting) on page 631*.

Figure 187 shows some center-aligned PWM waveforms in an example where:

- TIMx_ARR=8,
- PWM mode is the PWM mode 1,
- The flag is set when the counter counts down corresponding to the center-aligned mode 1 selected for CMS=01 in TIMx_CR1 register.

Figure 187. Center-aligned PWM waveforms (ARR=8)

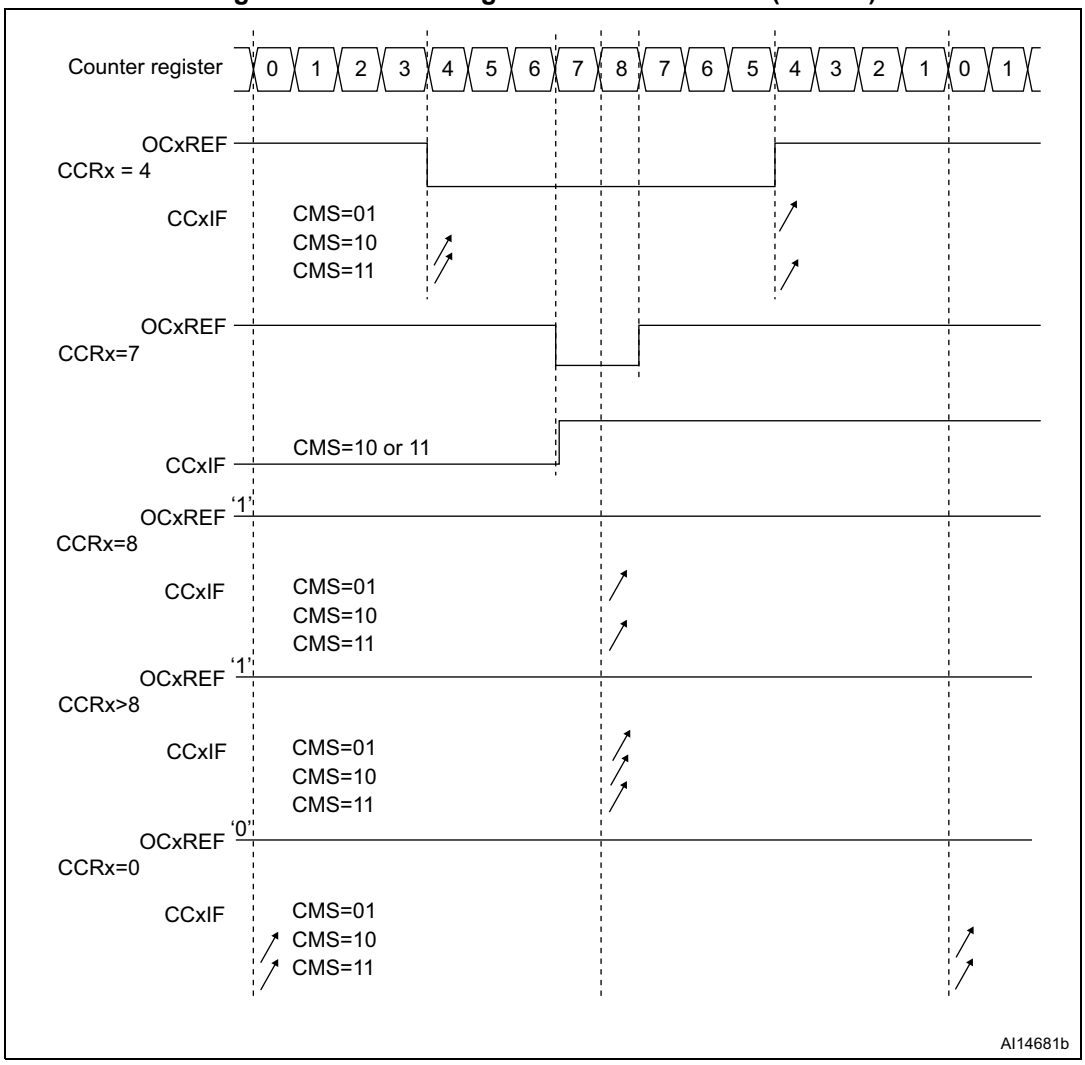

Hints on using center-aligned mode:

- When starting in center-aligned mode, the current up-down configuration is used. It means that the counter counts up or down depending on the value written in the DIR bit in the TIMx_CR1 register. Moreover, the DIR and CMS bits must not be changed at the same time by the software.
- Writing to the counter while running in center-aligned mode is not recommended as it can lead to unexpected results. In particular:
  - The direction is not updated if a value greater than the auto-reload value is written in the counter (TIMx_CNT>TIMx_ARR). For example, if the counter was counting up, it continues to count up.
  - The direction is updated if 0 or the TIMx_ARR value is written in the counter but no Update Event UEV is generated.
- The safest way to use center-aligned mode is to generate an update by software (setting the UG bit in the TIMx_EGR register) just before starting the counter and not to write the counter while it is running.

22.3.10 Asymmetric PWM mode

Asymmetric mode allows two center-aligned PWM signals to be generated with a programmable phase shift. While the frequency is determined by the value of the TIMx_ARR register, the duty cycle and the phase-shift are determined by a pair of TIMx_CCRx registers. One register controls the PWM during up-counting, the second during down counting, so that PWM is adjusted every half PWM cycle:

- OC1REFC (or OC2REFC) is controlled by TIMx_CCR1 and TIMx_CCR2
- OC3REFC (or OC4REFC) is controlled by TIMx_CCR3 and TIMx_CCR4

Asymmetric PWM mode can be selected independently on two channels (one OCx output per pair of CCR registers) by writing ‘1110’ (Asymmetric PWM mode 1) or ‘1111’ (Asymmetric PWM mode 2) in the OCxM bits in the TIMx_CCMRx register.

Note: The OCxM[3:0] bit field is split into two parts for compatibility reasons, the most significant bit is not contiguous with the 3 least significant ones.

When a given channel is used as asymmetric PWM channel, its secondary channel can also be used. For instance, if an OC1REFC signal is generated on channel 1 (Asymmetric PWM mode 1), it is possible to output either the OC2REF signal on channel 2, or an OC2REFC signal resulting from asymmetric PWM mode 2.

Figure 188 shows an example of signals that can be generated using Asymmetric PWM mode (channels 1 to 4 are configured in Asymmetric PWM mode 1).

Figure 188. Generation of 2 phase-shifted PWM signals with 50% duty cycle

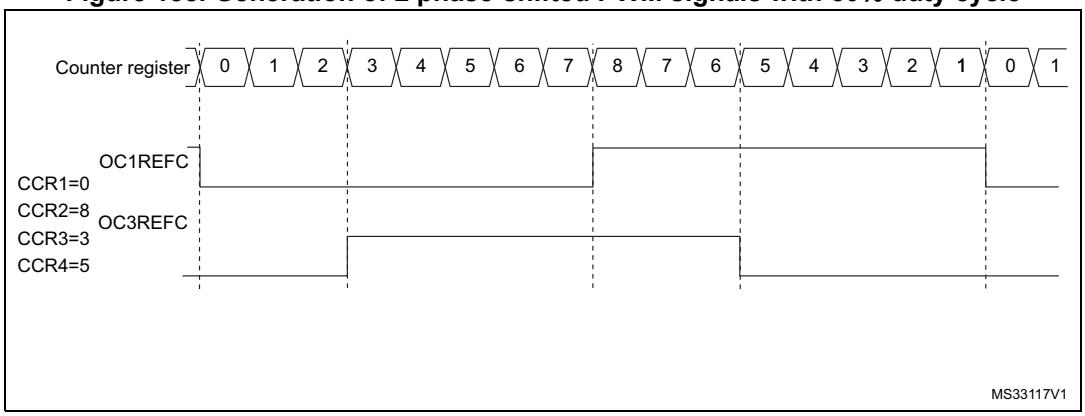

22.3.11 Combined PWM mode

Combined PWM mode allows two edge or center-aligned PWM signals to be generated with programmable delay and phase shift between respective pulses. While the frequency is determined by the value of the TIMx_ARR register, the duty cycle and delay are determined by the two TIMx_CCRx registers. The resulting signals, OCxREFC, are made of an OR or AND logical combination of two reference PWMs:

– OC1REFC (or OC2REFC) is controlled by TIMx_CCR1 and TIMx_CCR2

– OC3REFC (or OC4REFC) is controlled by TIMx_CCR3 and TIMx_CCR4

Combined PWM mode can be selected independently on two channels (one OCx output per pair of CCR registers) by writing ‘1100’ (Combined PWM mode 1) or ‘1101’ (Combined PWM mode 2) in the OCxM bits in the TIMx_CCMRx register.

When a given channel is used as combined PWM channel, its secondary channel must be configured in the opposite PWM mode (for instance, one in Combined PWM mode 1 and the other in Combined PWM mode 2).

Note: The OCxM[3:0] bit field is split into two parts for compatibility reasons, the most significant bit is not contiguous with the 3 least significant ones.

Figure 189 shows an example of signals that can be generated using Asymmetric PWM mode, obtained with the following configuration:

- Channel 1 is configured in Combined PWM mode 2,
- Channel 2 is configured in PWM mode 1,
- Channel 3 is configured in Combined PWM mode 2,
- Channel 4 is configured in PWM mode 1

Figure 189. Combined PWM mode on channels 1 and 3

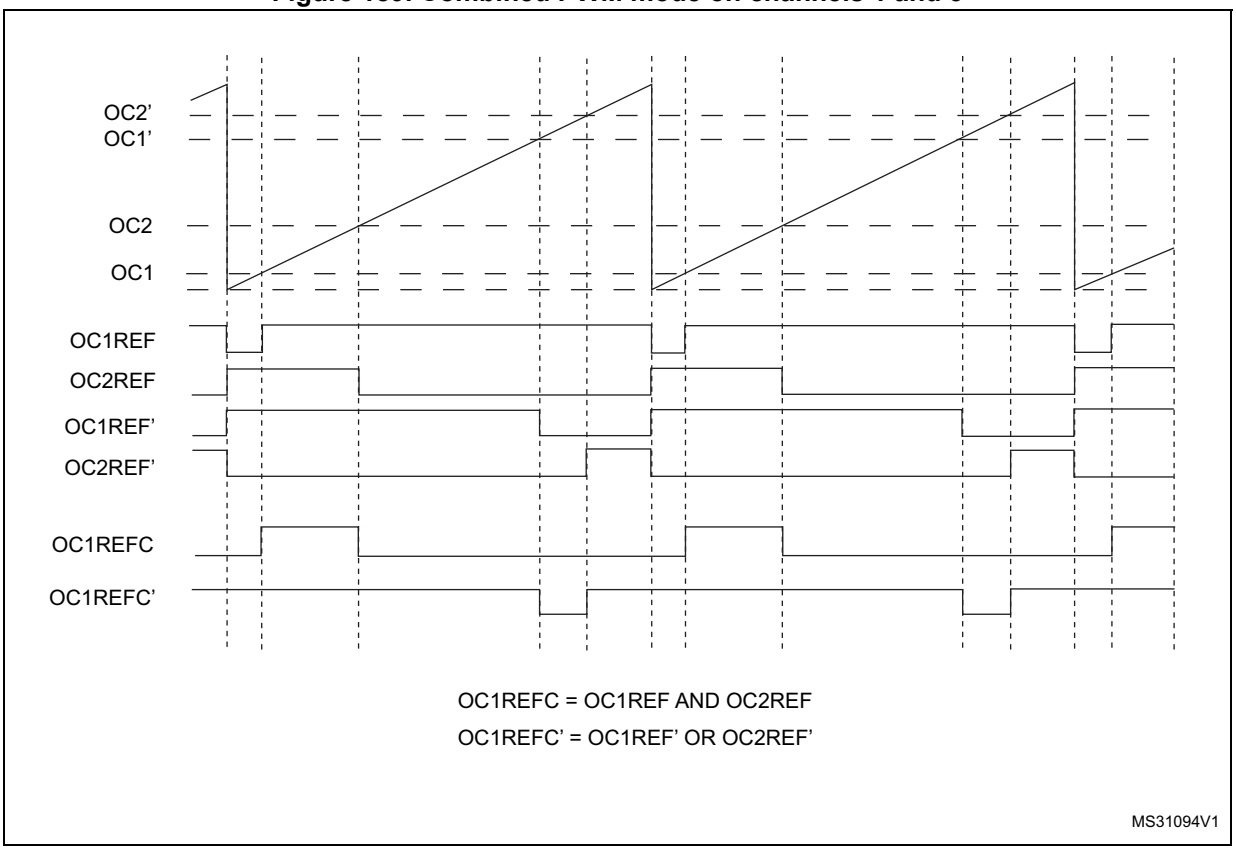

22.3.12 Clearing the OCxREF signal on an external event

The OCxREF signal of a given channel can be cleared when a high level is applied on the ocref_clr_int input (OCxCE enable bit in the corresponding TIMx_CCMRx register set to 1). OCxREF remains low until the next transition to the active state, on the following PWM cycle. This function can only be used in Output compare and PWM modes. It does not work in Forced mode.

OCREF_CLR_INPUT can be selected between the OCREF_CLR input and ETRF (ETR after the filter) by configuring the OCCS bit in the TIMx_SMCR register.

The OCxREF signal for a given channel can be reset by applying a high level on the ETRF input (OCxCE enable bit set to 1 in the corresponding TIMx_CCMRx register). OCxREF remains low until the next transition to the active state, on the following PWM cycle.

This function can be used only in the output compare and PWM modes. It does not work in forced mode.

For example, the OCxREF signal can be connected to the output of a comparator to be used for current handling. In this case, ETR must be configured as follows:

1. The external trigger prescaler should be kept off: bits ETPS[1:0] in the TIMx_SMCR register are cleared to 00.
2. The external clock mode 2 must be disabled: bit ECE in the TIM1_SMCR register is cleared to 0.
3. The external trigger polarity (ETP) and the external trigger filter (ETF) can be configured according to the application's needs.

Figure 190 shows the behavior of the OCxREF signal when the ETRF input becomes high, for both values of the OCxCE enable bit. In this example, the timer TIMx is programmed in PWM mode.

Figure 190. Clearing TIMx OCxREF

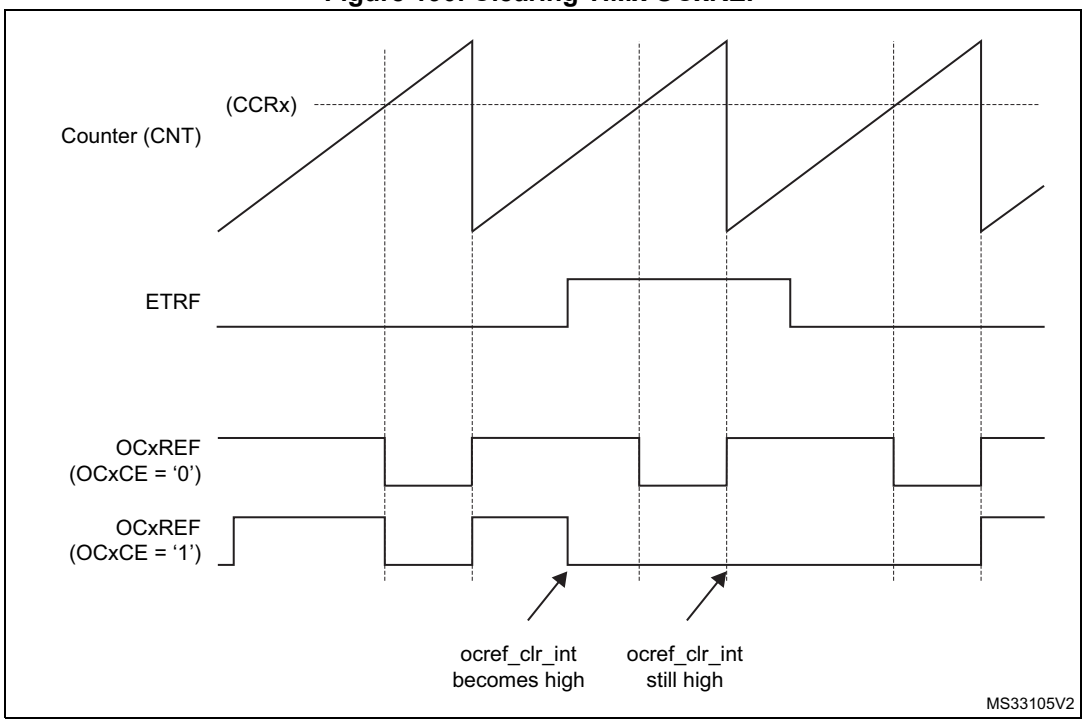

Note: In case of a PWM with a 100% duty cycle (if CCRx>ARR), OCxREF is enabled again at the next counter overflow.

22.3.13 One-pulse mode

One-pulse mode (OPM) is a particular case of the previous modes. It allows the counter to be started in response to a stimulus and to generate a pulse with a programmable length after a programmable delay.

Starting the counter can be controlled through the slave mode controller. Generating the waveform can be done in output compare mode or PWM mode. One-pulse mode is selected by setting the OPM bit in the TIMx_CR1 register. This makes the counter stop automatically at the next update event UEV.

A pulse can be correctly generated only if the compare value is different from the counter initial value. Before starting (when the timer is waiting for the trigger), the configuration must be:

- CNT<CCRx ≤ ARR (in particular, 0<CCRx),

Figure 191. Example of one-pulse mode.

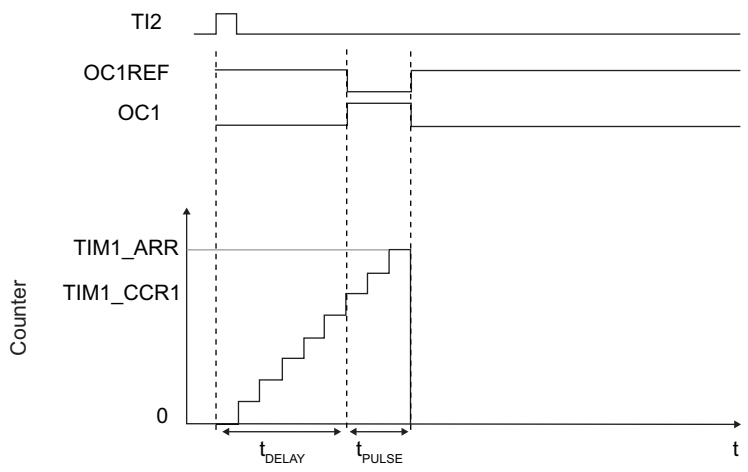

For example one may want to generate a positive pulse on OC1 with a length of t_{PULSE} and after a delay of t_{DELAY} as soon as a positive edge is detected on the TI2 input pin.

Let's use TI2FP2 as trigger 1:

1. Select the proper TI2x source (internal or external) with the TI2SEL[3:0] bits in the TIMx_TISEL register.
2. Map TI2FP2 on TI2 by writing CC2S=01 in the TIMx_CCMR1 register.
3. TI2FP2 must detect a rising edge, write CC2P=0 and CC2NP='0' in the TIMx_CCER register.
4. Configure TI2FP2 as trigger for the slave mode controller (TRGI) by writing TS=00110 in the TIMx_SMCR register.
5. TI2FP2 is used to start the counter by writing SMS to '110 in the TIMx_SMCR register (trigger mode).

The OPM waveform is defined by writing the compare registers (taking into account the clock frequency and the counter prescaler).

- The t_{DELAY} is defined by the value written in the TIMx_CCR1 register.
- The t_{PULSE} is defined by the difference between the auto-reload value and the compare value (TIMx_ARR - TIMx_CCR1).
- Let's say one want to build a waveform with a transition from '0 to '1 when a compare match occurs and a transition from '1 to '0 when the counter reaches the auto-reload value. To do this PWM mode 2 must be enabled by writing OC1M=111 in the TIMx_CCMR1 register. Optionally the preload registers can be enabled by writing OC1PE=1 in the TIMx_CCMR1 register and ARPE in the TIMx_CR1 register. In this case one has to write the compare value in the TIMx_CCR1 register, the auto-reload value in the TIMx_ARR register, generate an update by setting the UG bit and wait for external trigger event on TI2. CC1P is written to '0 in this example.

In our example, the DIR and CMS bits in the TIMx_CR1 register should be low.

Since only 1 pulse (Single mode) is needed, a 1 must be written in the OPM bit in the TIMx_CR1 register to stop the counter at the next update event (when the counter rolls over from the auto-reload value back to 0). When OPM bit in the TIMx_CR1 register is set to '0', so the Repetitive Mode is selected.

Particular case: OCx fast enable:

In One-pulse mode, the edge detection on TIx input set the CEN bit which enables the counter. Then the comparison between the counter and the compare value makes the output toggle. But several clock cycles are needed for these operations and it limits the minimum delay t_{DELAY} min we can get.

If one wants to output a waveform with the minimum delay, the OCxFE bit can be set in the TIMx_CCMRx register. Then OCxRef (and OCx) is forced in response to the stimulus, without taking in account the comparison. Its new level is the same as if a compare match had occurred. OCxFE acts only if the channel is configured in PWM1 or PWM2 mode.

22.3.14 Retriggerable one pulse mode

This mode allows the counter to be started in response to a stimulus and to generate a pulse with a programmable length, but with the following differences with Non-retriggerable one pulse mode described in *Section 22.3.13*:

- The pulse starts as soon as the trigger occurs (no programmable delay)
- The pulse is extended if a new trigger occurs before the previous one is completed

The timer must be in Slave mode, with the bits SMS[3:0] = '1000' (Combined Reset + trigger mode) in the TIMx_SMCR register, and the OCxM[3:0] bits set to '1000' or '1001' for Retriggerable OPM mode 1 or 2.

If the timer is configured in Up-counting mode, the corresponding CCRx must be set to 0 (the ARR register sets the pulse length). If the timer is configured in Down-counting mode CCRx must be above or equal to ARR.

Note: In retriggerable one pulse mode, the CCxIF flag is not significant.

The OCxM[3:0] and SMS[3:0] bit fields are split into two parts for compatibility reasons, the most significant bit is not contiguous with the 3 least significant ones.

This mode must not be used with center-aligned PWM modes. It is mandatory to have CMS[1:0] = 00 in TIMx_CR1.

Figure 192. Retriggerable one-pulse mode

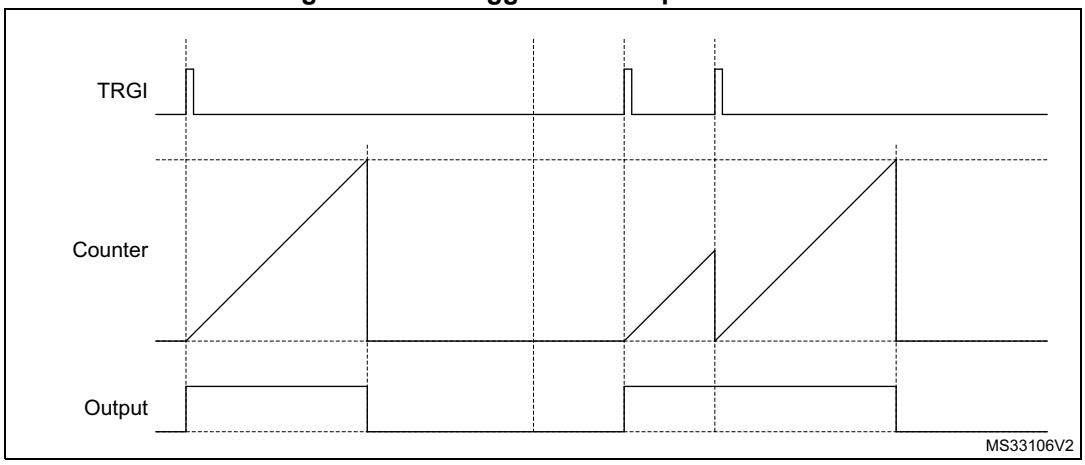

22.3.15 Encoder interface mode

To select Encoder Interface mode write SMS=‘001 in the TIMx_SMCR register if the counter is counting on TI2 edges only, SMS=010 if it is counting on TI1 edges only and SMS=011 if it is counting on both TI1 and TI2 edges.

Select the TI1 and TI2 polarity by programming the CC1P and CC2P bits in the TIMx_CCER register. CC1NP and CC2NP must be kept cleared. When needed, the input filter can be programmed as well. CC1NP and CC2NP must be kept low.

The two inputs TI1 and TI2 are used to interface to an incremental encoder. Refer to *Table 139*. The counter is clocked by each valid transition on TI1FP1 or TI2FP2 (TI1 and TI2 after input filter and polarity selection, TI1FP1=TI1 if not filtered and not inverted, TI2FP2=TI2 if not filtered and not inverted) assuming that it is enabled (CEN bit in TIMx_CR1 register written to ‘1). The sequence of transitions of the two inputs is evaluated and generates count pulses as well as the direction signal. Depending on the sequence the counter counts up or down, the DIR bit in the TIMx_CR1 register is modified by hardware accordingly. The DIR bit is calculated at each transition on any input (TI1 or TI2), whatever the counter is counting on TI1 only, TI2 only or both TI1 and TI2.

Encoder interface mode acts simply as an external clock with direction selection. This means that the counter just counts continuously between 0 and the auto-reload value in the TIMx_ARR register (0 to ARR or ARR down to 0 depending on the direction). So the TIMx_ARR must be configured before starting. In the same way, the capture, compare, prescaler, trigger output features continue to work as normal.

In this mode, the counter is modified automatically following the speed and the direction of the quadrature encoder and its content, therefore, always represents the encoder’s position. The count direction correspond to the rotation direction of the connected sensor. The table summarizes the possible combinations, assuming TI1 and TI2 do not switch at the same time.

Table 139. Counting direction versus encoder signals

Active edge	Level on opposite signal (TI1FP1 for TI2, TI2FP2 for TI1)	TI1FP1 signal		TI2FP2 signal	
		Rising	Falling	Rising	Falling
Counting on TI1 only	High	Down	Up	No Count	No Count
	Low	Up	Down	No Count	No Count
Counting on TI2 only	High	No Count	No Count	Up	Down
	Low	No Count	No Count	Down	Up
Counting on TI1 and TI2	High	Down	Up	Up	Down
	Low	Up	Down	Down	Up

An external incremental encoder can be connected directly to the MCU without external interface logic. However, comparators are normally be used to convert the encoder's differential outputs to digital signals. This greatly increases noise immunity. The third encoder output which indicate the mechanical zero position, may be connected to an external interrupt input and trigger a counter reset.

Figure 193 gives an example of counter operation, showing count signal generation and direction control. It also shows how input jitter is compensated where both edges are selected. This might occur if the sensor is positioned near to one of the switching points. For this example we assume that the configuration is the following:

- CC1S= 01 (TIMx_CCMR1 register, TI1FP1 mapped on TI1)
- CC2S= 01 (TIMx_CCMR1 register, TI2FP2 mapped on TI2)
- CC1P and CC1NP = '0' (TIMx_CCER register, TI1FP1 noninverted, TI1FP1=TI1)
- CC2P and CC2NP = '0' (TIMx_CCER register, TI2FP2 noninverted, TI2FP2=TI2)
- SMS= 011 (TIMx_SMCR register, both inputs are active on both rising and falling edges)
- CEN= 1 (TIMx_CR1 register, Counter is enabled)

Figure 193. Example of counter operation in encoder interface mode

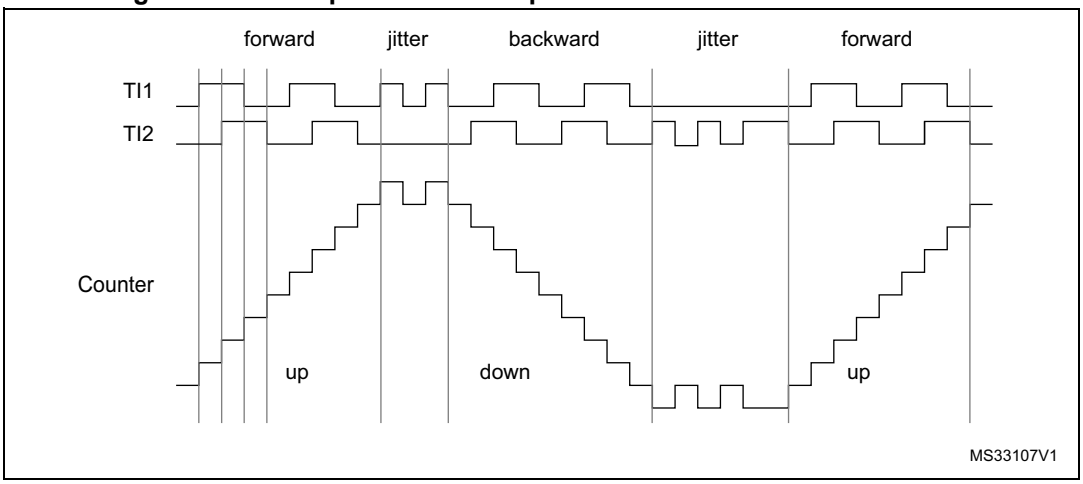

Figure 194 gives an example of counter behavior when TI1FP1 polarity is inverted (same configuration as above except CC1P=1).

Figure 194. Example of encoder interface mode with TI1FP1 polarity inverted

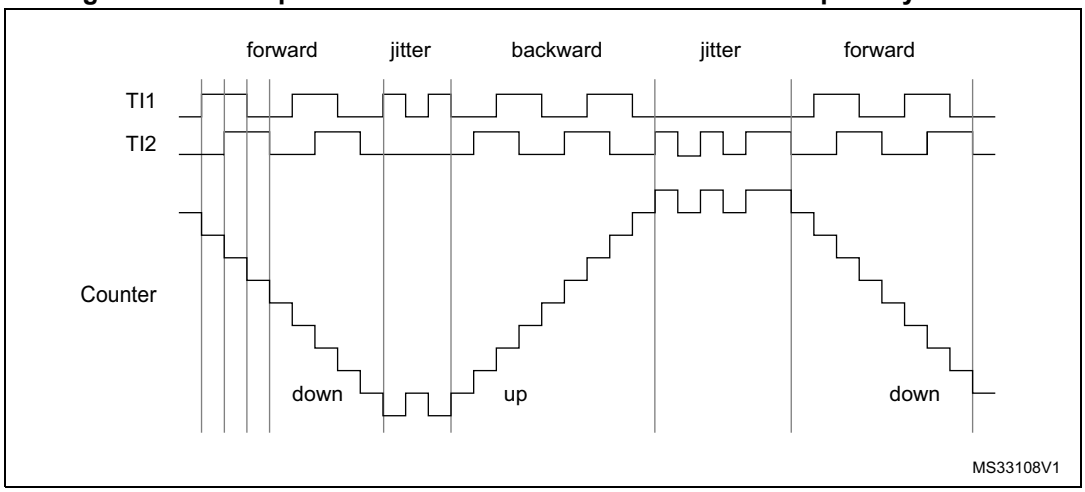

The timer, when configured in Encoder Interface mode provides information on the sensor's current position. Dynamic information can be obtained (speed, acceleration, deceleration) by measuring the period between two encoder events using a second timer configured in capture mode. The output of the encoder which indicates the mechanical zero can be used for this purpose. Depending on the time between two events, the counter can also be read at regular times. This can be done by latching the counter value into a third input capture register if available (then the capture signal must be periodic and can be generated by another timer). when available, it is also possible to read its value through a DMA request generated by a Real-Time clock.

22.3.16 UIF bit remapping

The IUFREMAP bit in the TIMx_CR1 register forces a continuous copy of the update interrupt flag (UIF) into bit 31 of the timer counter register's bit 31 (TIMxCNT[31]). This permits to atomically read both the counter value and a potential roll-over condition signaled by the UIFCPY flag. It eases the calculation of angular speed by avoiding race conditions caused, for instance, by a processing shared between a background task (counter reading) and an interrupt (update interrupt).

There is no latency between the UIF and UIFCPY flag assertions.

In 32-bit timer implementations, when the IUFREMAP bit is set, bit 31 of the counter is overwritten by the UIFCPY flag upon read access (the counter's most significant bit is only accessible in write mode).

22.3.17 Timer input XOR function

The TI1S bit in the TIM1xx_CR2 register, allows the input filter of channel 1 to be connected to the output of a XOR gate, combining the three input pins TIMx_CH1 to TIMx_CH3.

The XOR output can be used with all the timer input functions such as trigger or input capture.

An example of this feature used to interface Hall sensors is given in *Section 21.3.25: Interfacing with Hall sensors on page 573*.

22.3.18 Timers and external trigger synchronization

The TIMx Timers can be synchronized with an external trigger in several modes: Reset mode, Gated mode and Trigger mode.

Slave mode: Reset mode

The counter and its prescaler can be reinitialized in response to an event on a trigger input. Moreover, if the URS bit from the TIMx_CR1 register is low, an update event UEV is generated. Then all the preloaded registers (TIMx_ARR, TIMx_CCRx) are updated.

In the following example, the upcounter is cleared in response to a rising edge on TI1 input:

1. Configure the channel 1 to detect rising edges on TI1. Configure the input filter duration (in this example, we do not need any filter, so we keep IC1F=0000). The capture prescaler is not used for triggering, so it does not need to be configured. The CC1S bits select the input capture source only, CC1S = 01 in the TIMx_CCMR1 register. Write CC1P=0 and CC1NP=0 in TIMx_CCER register to validate the polarity (and detect rising edges only).
2. Configure the timer in reset mode by writing SMS=100 in TIMx_SMCR register. Select TI1 as the input source by writing TS=00101 in TIMx_SMCR register.
3. Start the counter by writing CEN=1 in the TIMx_CR1 register.

The counter starts counting on the internal clock, then behaves normally until TI1 rising edge. When TI1 rises, the counter is cleared and restarts from 0. In the meantime, the trigger flag is set (TIF bit in the TIMx_SR register) and an interrupt request can be sent if enabled (depending on the TIE bit in TIMx_DIER register).

The following figure shows this behavior when the auto-reload register TIMx_ARR=0x36. The delay between the rising edge on TI1 and the actual reset of the counter is due to the resynchronization circuit on TI1 input.

Figure 195. Control circuit in reset mode

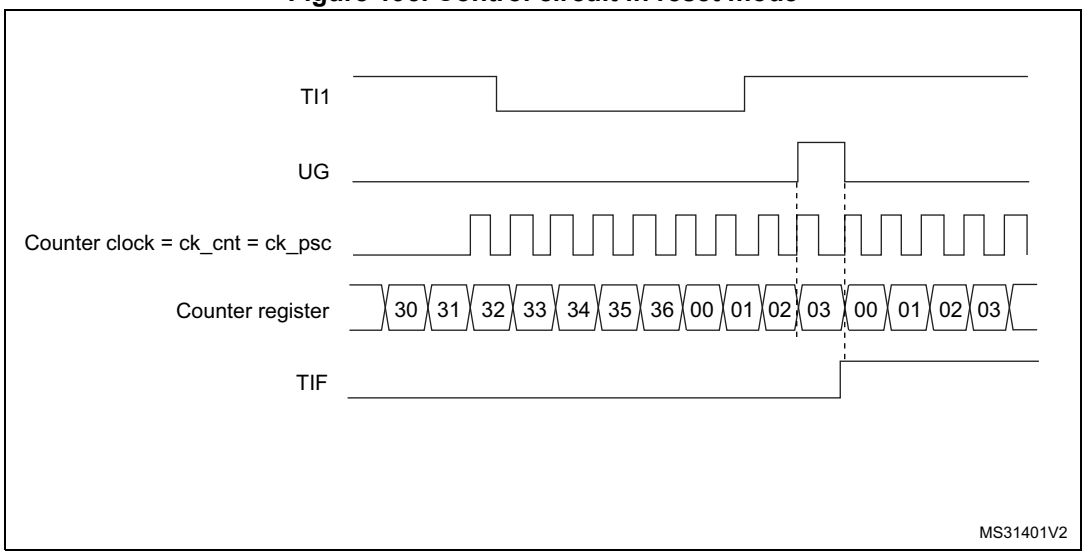

Slave mode: Gated mode

The counter can be enabled depending on the level of a selected input.

In the following example, the upcounter counts only when TI1 input is low:

1. Configure the channel 1 to detect low levels on TI1. Configure the input filter duration (in this example, we do not need any filter, so we keep IC1F=0000). The capture prescaler is not used for triggering, so it does not need to be configured. The CC1S bits select the input capture source only, CC1S=01 in TIMx_CCMR1 register. Write CC1P=1 and CC1NP=0 in TIMx_CCER register to validate the polarity (and detect low level only).
2. Configure the timer in gated mode by writing SMS=101 in TIMx_SMCR register. Select TI1 as the input source by writing TS=00101 in TIMx_SMCR register.
3. Enable the counter by writing CEN=1 in the TIMx_CR1 register (in gated mode, the counter doesn't start if CEN=0, whatever is the trigger input level).

The counter starts counting on the internal clock as long as TI1 is low and stops as soon as TI1 becomes high. The TIF flag in the TIMx_SR register is set both when the counter starts or stops.

The delay between the rising edge on TI1 and the actual stop of the counter is due to the resynchronization circuit on TI1 input.

Figure 196. Control circuit in gated mode

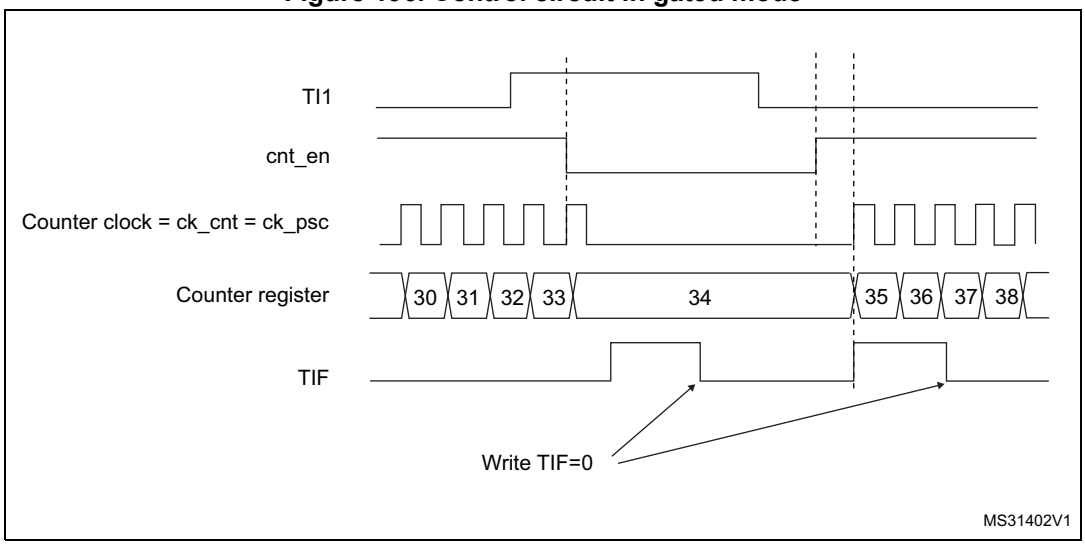

1. The configuration "CCxP=CCxNP=1" (detection of both rising and falling edges) does not have any effect in gated mode because gated mode acts on a level and not on an edge.

Note: The configuration "CCxP=CCxNP=1" (detection of both rising and falling edges) does not have any effect in gated mode because gated mode acts on a level and not on an edge.

Slave mode: Trigger mode

The counter can start in response to an event on a selected input.

In the following example, the upcounter starts in response to a rising edge on TI2 input:

1. Configure the channel 2 to detect rising edges on TI2. Configure the input filter duration (in this example, we do not need any filter, so we keep IC2F=0000). The capture prescaler is not used for triggering, so it does not need to be configured. CC2S bits are selecting the input capture source only, CC2S=01 in TIMx_CCMR1 register. Write

CC2P=1 and CC2NP=0 in TIMx_CCER register to validate the polarity (and detect low level only).

2. Configure the timer in trigger mode by writing SMS=110 in TIMx_SMCR register. Select TI2 as the input source by writing TS=00110 in TIMx_SMCR register.

When a rising edge occurs on TI2, the counter starts counting on the internal clock and the TIF flag is set.

The delay between the rising edge on TI2 and the actual start of the counter is due to the resynchronization circuit on TI2 input.

Figure 197. Control circuit in trigger mode

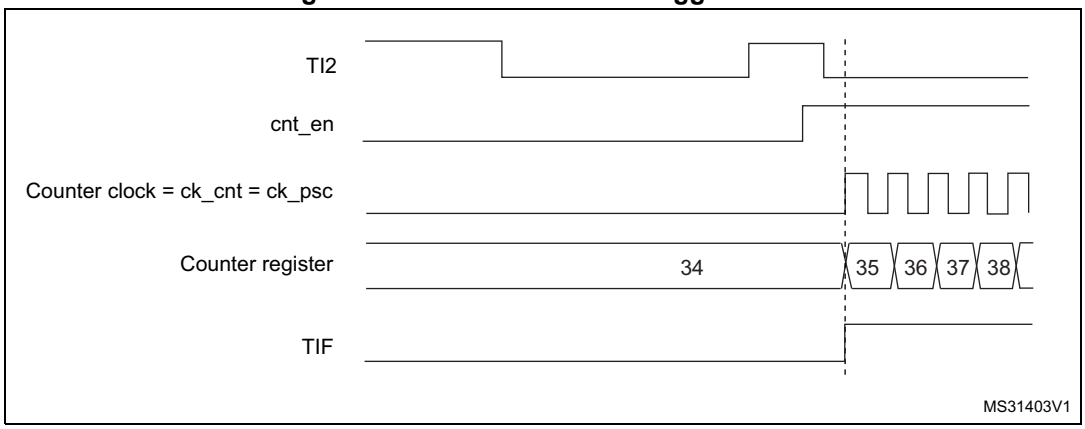

Slave mode: Combined reset + trigger mode

In this case, a rising edge of the selected trigger input (TRGI) reinitializes the counter, generates an update of the registers, and starts the counter.

This mode is used for one-pulse mode.

Slave mode: External Clock mode 2 + trigger mode

The external clock mode 2 can be used in addition to another slave mode (except external clock mode 1 and encoder mode). In this case, the ETR signal is used as external clock input, and another input can be selected as trigger input when operating in reset mode, gated mode or trigger mode. It is recommended not to select ETR as TRGI through the TS bits of TIMx_SMCR register.

In the following example, the upcounter is incremented at each rising edge of the ETR signal as soon as a rising edge of TI1 occurs:

1. Configure the external trigger input circuit by programming the TIMx_SMCR register as follows:
   - ETF = 0000: no filter
   - ETPS=00: prescaler disabled
   - ETP=0: detection of rising edges on ETR and ECE=1 to enable the external clock mode 2.
2. Configure the channel 1 as follows, to detect rising edges on TI:
   - IC1F=0000: no filter.
   - The capture prescaler is not used for triggering and does not need to be configured.
   - CC1S=01in TIMx_CCMR1 register to select only the input capture source
   - CC1P=0 and CC1NP=0 in TIMx_CCER register to validate the polarity (and detect rising edge only).
3. Configure the timer in trigger mode by writing SMS=110 in TIMx_SMCR register. Select TI1 as the input source by writing TS=00101 in TIMx_SMCR register.

A rising edge on TI1 enables the counter and sets the TIF flag. The counter then counts on ETR rising edges.

The delay between the rising edge of the ETR signal and the actual reset of the counter is due to the resynchronization circuit on ETRP input.

Figure 198. Control circuit in external clock mode 2 + trigger mode

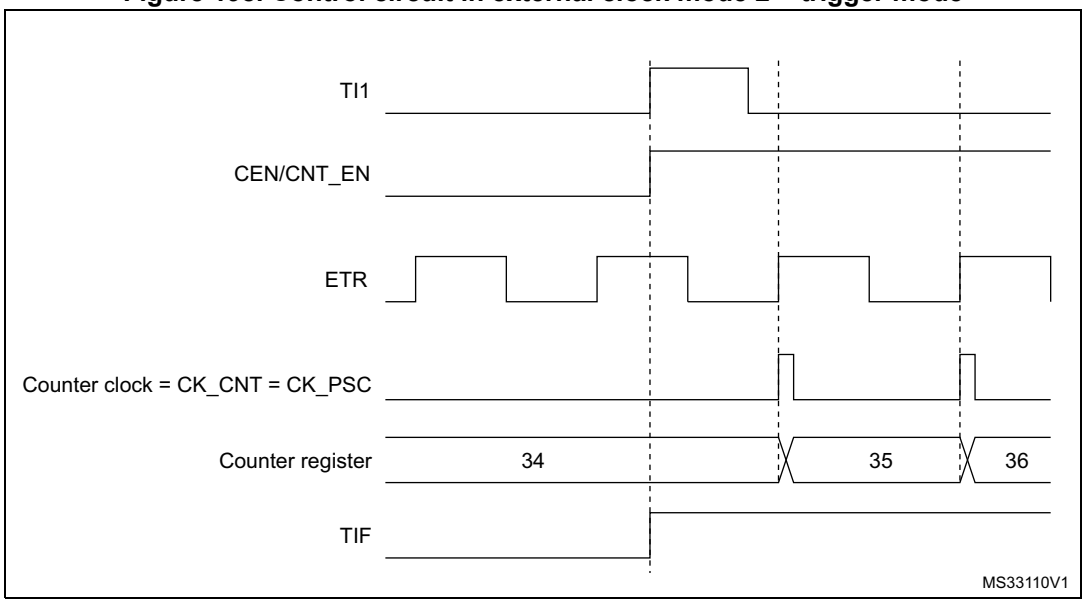

22.3.19 Timer synchronization

The TIMx timers are linked together internally for timer synchronization or chaining. When one Timer is configured in Master Mode, it can reset, start, stop or clock the counter of another Timer configured in Slave Mode.

Figure 199: Master/Slave timer example and *Figure 200: Master/slave connection example with 1 channel only timers* present an overview of the trigger selection and the master mode selection blocks.

Figure 199. Master/Slave timer example

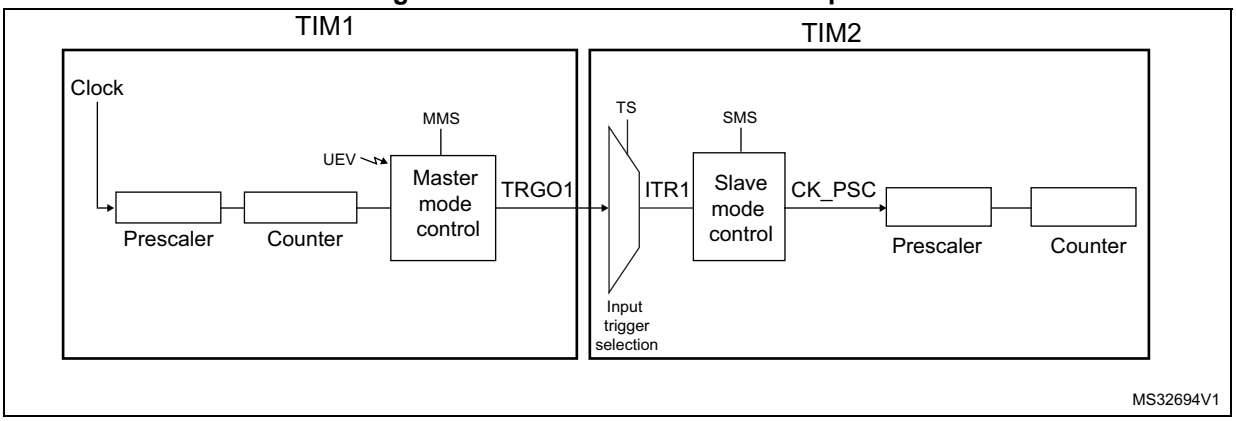

Figure 200. Master/slave connection example with 1 channel only timers

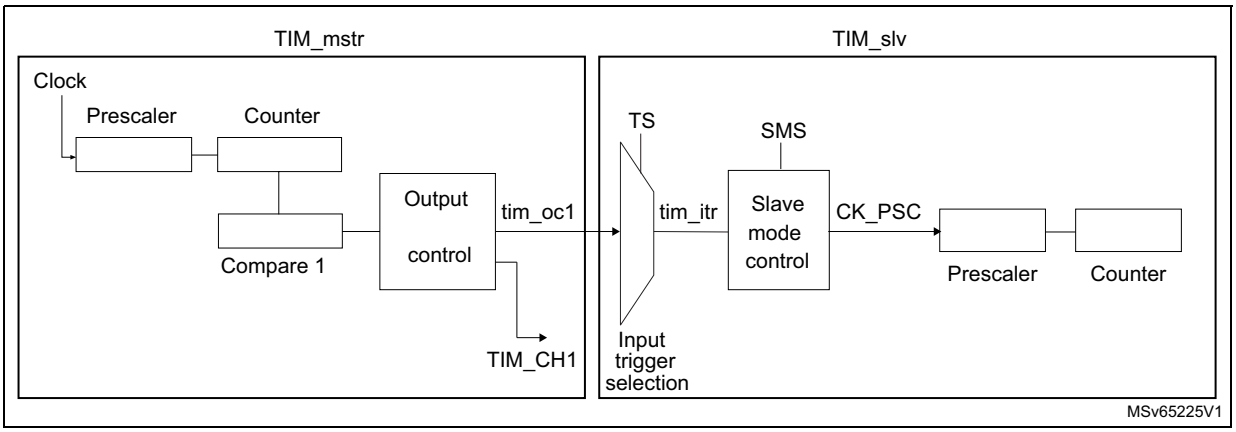

Note: The timers with one channel only (see Figure 200) do not feature a master mode. However, the OC1 output signal can be used to trigger some other timers (including timers described in other sections of this document). Check the "TIMx internal trigger connection" table of any TIMx_SMCR register on the device to identify which timers can be targeted as slave.
The OC1 signal pulse width must be programmed to be at least 2 clock cycles of the destination timer, to make sure the slave timer detects the trigger.
For instance, if the destination's timer CK_INT clock is 4 times slower than the source timer, the OC1 pulse width must be 8 clock cycles.

Using one timer as prescaler for another timer

For example, TIM1 can be configured to act as a prescaler for TIM2. Refer to *Figure 199*. To do this:

1. Configure TIM1 in master mode so that it outputs a periodic trigger signal on each update event UEV. If MMS=010 is written in the TIM1_CR2 register, a rising edge is output on TRGO each time an update event is generated.
2. To connect the TRGO output of TIM1 to TIM2, TIM2 must be configured in slave mode using ITR0 as internal trigger. This is selected through the TS bits in the TIM2_SMCR register (writing TS=00000).
3. Then the slave mode controller must be put in external clock mode 1 (write SMS=111 in the TIM2_SMCR register). This causes TIM2 to be clocked by the rising edge of the periodic TIM1 trigger signal (which correspond to the TIM1 counter overflow).
4. Finally both timers must be enabled by setting their respective CEN bits (TIMx_CR1 register).

Note: If OCx is selected on TIM1 as the trigger output (MMS=1xx), its rising edge is used to clock the counter of TIM2.

Using one timer to enable another timer

In this example, we control the enable of TIM2 with the output compare 1 of Timer 1. Refer to *Figure 199* for connections. TIM2 counts on the divided internal clock only when OC1REF of TIM1 is high. Both counter clock frequencies are divided by 3 by the prescaler compared to CK_INT ($f_{CK_CNT} = f_{CK_INT}/3$).

1. Configure TIM1 master mode to send its Output Compare 1 Reference (OC1REF) signal as trigger output (MMS=100 in the TIM1_CR2 register).
2. Configure the TIM1 OC1REF waveform (TIM1_CCMR1 register).
3. Configure TIM2 to get the input trigger from TIM1 (TS=00000 in the TIM2_SMCR register).
4. Configure TIM2 in gated mode (SMS=101 in TIM2_SMCR register).
5. Enable TIM2 by writing ‘1 in the CEN bit (TIM_CR1 register).
6. Start TIM by writing ‘1 in the CEN bit (TIM1_CR1 register).

Note: The counter 2 clock is not synchronized with counter 1, this mode only affects the TIM2 counter enable signal.

Figure 201. Gating TIM2 with OC1REF of TIM1

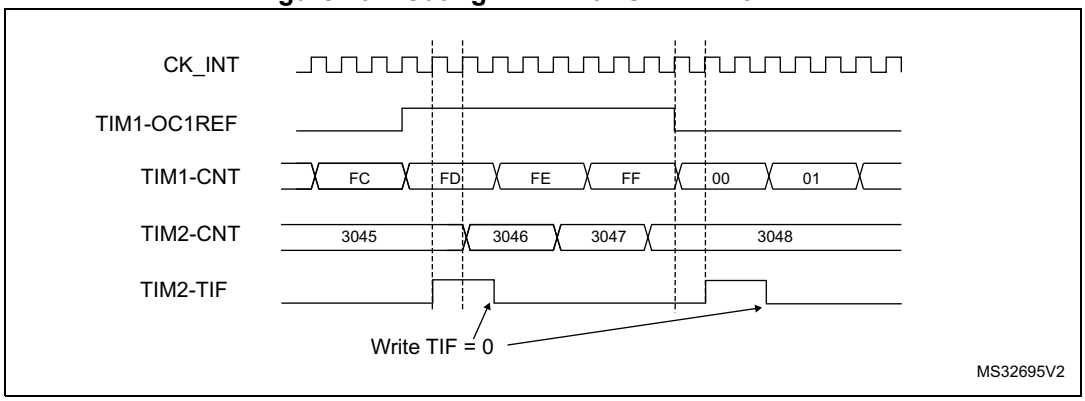

In the example in *Figure 201*, the TIM2 counter and prescaler are not initialized before being started. So they start counting from their current value. It is possible to start from a given value by resetting both timers before starting TIM1. Then any value can be written in the timer counters. The timers can easily be reset by software using the UG bit in the TIMx_EGR registers.

In the next example (refer to *Figure 202*), we synchronize TIM1 and TIM2. TIM1 is the master and starts from 0. TIM2 is the slave and starts from 0xE7. The prescaler ratio is the same for both timers. TIM2 stops when TIM1 is disabled by writing ‘0 to the CEN bit in the TIM1_CR1 register:

1. Configure TIM1 master mode to send its Output Compare 1 Reference (OC1REF) signal as trigger output (MMS=100 in the TIM1_CR2 register).
2. Configure the TIM1 OC1REF waveform (TIM1_CCMR1 register).
3. Configure TIM2 to get the input trigger from TIM1 (TS=00000 in the TIM2_SMCR register).
4. Configure TIM2 in gated mode (SMS=101 in TIM2_SMCR register).
5. Reset TIM1 by writing ‘1 in UG bit (TIM1_EGR register).
6. Reset TIM2 by writing ‘1 in UG bit (TIM2_EGR register).
7. Initialize TIM2 to 0xE7 by writing ‘0xE7’ in the TIM2 counter (TIM2_CNTL).
8. Enable TIM2 by writing ‘1 in the CEN bit (TIM2_CR1 register).
9. Start TIM1 by writing ‘1 in the CEN bit (TIM1_CR1 register).
10. Stop TIM1 by writing ‘0 in the CEN bit (TIM1_CR1 register).

Figure 202. Gating TIM2 with Enable of TIM1

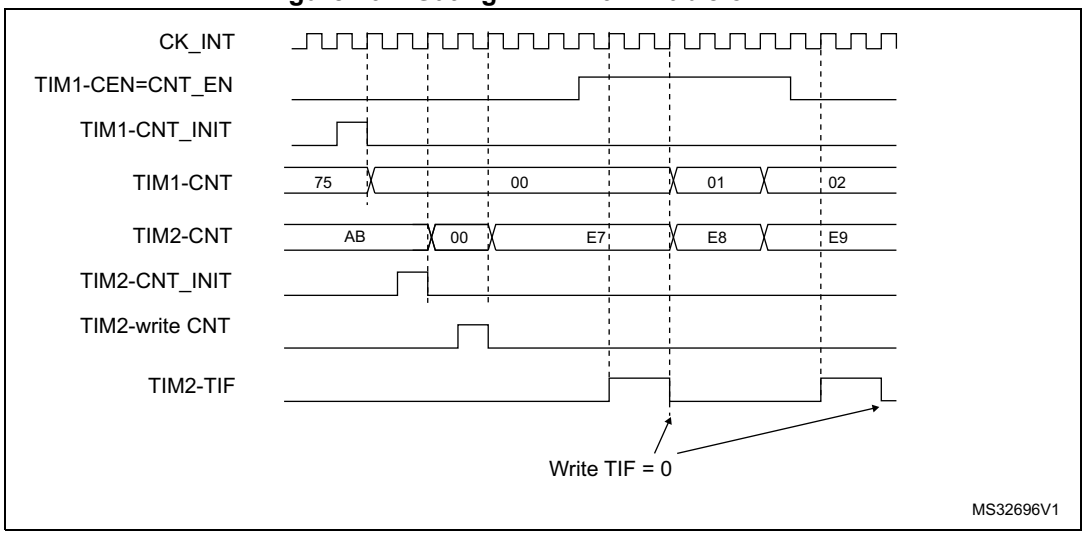

Using one timer to start another timer

In this example, we set the enable of Timer 2 with the update event of Timer 1. Refer to *Figure 199* for connections. Timer 2 starts counting from its current value (which can be non-zero) on the divided internal clock as soon as the update event is generated by Timer 1. When Timer 2 receives the trigger signal its CEN bit is automatically set and the counter counts until we write ‘0 to the CEN bit in the TIM2_CR1 register. Both counter clock frequencies are divided by 3 by the prescaler compared to CK_INT ($f_{CK_CNT} = f_{CK_INT}/3$).

1. Configure TIM1 master mode to send its Update Event (UEV) as trigger output (MMS=010 in the TIM1_CR2 register).
2. Configure the TIM1 period (TIM1_ARR registers).
3. Configure TIM2 to get the input trigger from TIM1 (TS=00000 in the TIM2_SMCR register).
4. Configure TIM2 in trigger mode (SMS=110 in TIM2_SMCR register).
5. Start TIM1 by writing ‘1 in the CEN bit (TIM1_CR1 register).

Figure 203. Triggering TIM2 with update of TIM1

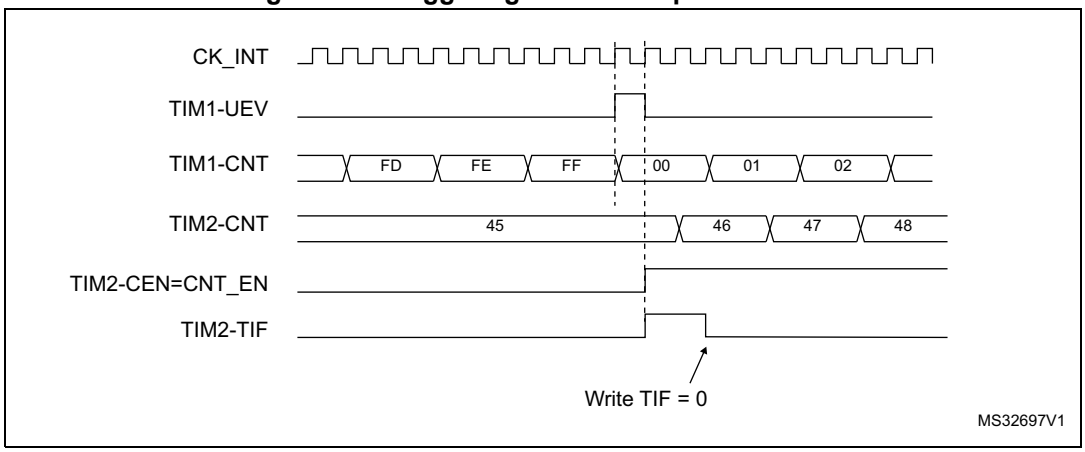

As in the previous example, both counters can be initialized before starting counting. *Figure 204* shows the behavior with the same configuration as in *Figure 203* but in trigger mode instead of gated mode (SMS=110 in the TIM2_SMCR register).

Figure 204. Triggering TIM2 with Enable of TIM1

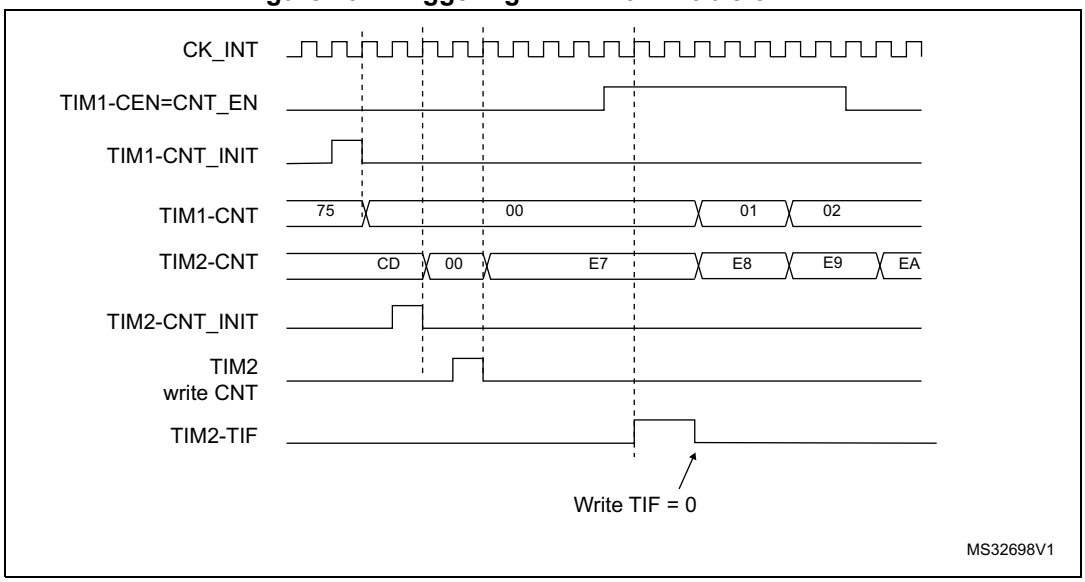

Note: The clock of the slave peripherals (timer, ADC, ...) receiving the TRGO signal must be enabled prior to receive events from the master timer, and the clock frequency (prescaler) must not be changed on-the-fly while triggers are received from the master timer.

22.3.20 DMA burst mode

The TIMx timers have the capability to generate multiple DMA requests upon a single event. The main purpose is to be able to re-program part of the timer multiple times without software overhead, but it can also be used to read several registers in a row, at regular intervals.

The DMA controller destination is unique and must point to the virtual register TIMx_DMAR. On a given timer event, the timer launches a sequence of DMA requests (burst). Each write into the TIMx_DMAR register is actually redirected to one of the timer registers.

The DBL[4:0] bits in the TIMx_DCR register set the DMA burst length. The timer recognizes a burst transfer when a read or a write access is done to the TIMx_DMAR address), i.e. the number of transfers (either in half-words or in bytes).

The DBA[4:0] bits in the TIMx_DCR registers define the DMA base address for DMA transfers (when read/write access are done through the TIMx_DMAR address). DBA is defined as an offset starting from the address of the TIMx_CR1 register:

Example:

00000: TIMx_CR1

00001: TIMx_CR2

00010: TIMx_SMCR

As an example, the timer DMA burst feature is used to update the contents of the CCRx registers (x = 2, 3, 4) upon an update event, with the DMA transferring half words into the CCRx registers.

This is done in the following steps:

1. Configure the corresponding DMA channel as follows:
   - DMA channel peripheral address is the DMAR register address
   - DMA channel memory address is the address of the buffer in the RAM containing the data to be transferred by DMA into CCRx registers.
   - Number of data to transfer = 3 (See note below).
   - Circular mode disabled.
2. Configure the DCR register by configuring the DBA and DBL bit fields as follows: DBL = 3 transfers, DBA = 0xE.
3. Enable the TIMx update DMA request (set the UDE bit in the DIER register).
4. Enable TIMx
5. Enable the DMA channel

This example is for the case where every CCRx register has to be updated once. If every CCRx register is to be updated twice for example, the number of data to transfer should be 6. Let's take the example of a buffer in the RAM containing data1, data2, data3, data4, data5 and data6. The data is transferred to the CCRx registers as follows: on the first update DMA request, data1 is transferred to CCR2, data2 is transferred to CCR3, data3 is transferred to CCR4 and on the second update DMA request, data4 is transferred to CCR2, data5 is transferred to CCR3 and data6 is transferred to CCR4.

Note: A null value can be written to the reserved registers.

22.3.21 Debug mode

When the system enters debug mode (processor core halted), the TIMx counter either continues to work normally or stops, depending on DBG_TIM2_STOP configuration bit in DBGMCU module. For more details, refer to *Section 33.8.3: DBGMCU CPU1 APB1 peripheral freeze register 1 (DBGMCU_APB1FZR1)*.

22.4 TIM2 registers

In this section, “TIMx” should be understood as “TIM2” since there is only one instance of this type of timer for the products to which this reference manual applies.

Refer to *Section 1.2* for a list of abbreviations used in register descriptions.

The peripheral registers can be accessed by half-words (16-bit) or words (32-bit).

22.4.1 TIM2 control register 1 (TIM2_CR1)

Address offset: 0x00

Reset value: 0x0000

15	14	13	12	11	10	9	8	7	6	5	4	3	2	1	0
Res.	Res.	Res.	Res.	UIFREMAP	Res.	CKD[1:0]		ARPE	CMS[1:0]		DIR	OPM	URS	UDIS	CEN
				rw		rw	rw	rw	rw	rw	rw	rw	rw	rw	rw

Bits 15:12 Reserved, must be kept at reset value.

Bit 11 **UIFREMAP**: UIF status bit remapping

0: No remapping. UIF status bit is not copied to TIMx_CNT register bit 31.
1: Remapping enabled. UIF status bit is copied to TIMx_CNT register bit 31.

Bit 10 Reserved, must be kept at reset value.

Bits 9:8 **CKD[1:0]**: Clock division

This bit-field indicates the division ratio between the timer clock (CK_INT) frequency and sampling clock used by the digital filters (ETR, TIx),

00: $t_{DTS} = t_{CK_INT}$
01: $t_{DTS} = 2 \times t_{CK_INT}$
10: $t_{DTS} = 4 \times t_{CK_INT}$
11: Reserved

Bit 7 **ARPE**: Auto-reload preload enable

0: TIMx_ARR register is not buffered
1: TIMx_ARR register is buffered

Bits 6:5 **CMS[1:0]**: Center-aligned mode selection

00: Edge-aligned mode. The counter counts up or down depending on the direction bit (DIR).
01: Center-aligned mode 1. The counter counts up and down alternatively. Output compare interrupt flags of channels configured in output (CCxS=00 in TIMx_CCMRx register) are set only when the counter is counting down.
10: Center-aligned mode 2. The counter counts up and down alternatively. Output compare interrupt flags of channels configured in output (CCxS=00 in TIMx_CCMRx register) are set only when the counter is counting up.
11: Center-aligned mode 3. The counter counts up and down alternatively. Output compare interrupt flags of channels configured in output (CCxS=00 in TIMx_CCMRx register) are set both when the counter is counting up or down.

Note: It is not allowed to switch from edge-aligned mode to center-aligned mode as long as the counter is enabled (CEN=1)

Bit 4 **DIR**: Direction

0: Counter used as upcounter
1: Counter used as downcounter

Note: This bit is read only when the timer is configured in Center-aligned mode or Encoder mode.

Bit 3 **OPM**: One-pulse mode

0: Counter is not stopped at update event
1: Counter stops counting at the next update event (clearing the bit CEN)

Bit 2 **URS**: Update request source

This bit is set and cleared by software to select the UEV event sources.
0: Any of the following events generate an update interrupt or DMA request if enabled. These events can be:
- Counter overflow/underflow
- Setting the UG bit
- Update generation through the slave mode controller

1: Only counter overflow/underflow generates an update interrupt or DMA request if enabled.

Bit 1 **UDIS**: Update disable

This bit is set and cleared by software to enable/disable UEV event generation.
0: UEV enabled. The Update (UEV) event is generated by one of the following events:
- Counter overflow/underflow
- Setting the UG bit
- Update generation through the slave mode controller

Buffered registers are then loaded with their preload values.
1: UEV disabled. The Update event is not generated, shadow registers keep their value (ARR, PSC, CCRx). However the counter and the prescaler are reinitialized if the UG bit is set or if a hardware reset is received from the slave mode controller.

Bit 0 **CEN**: Counter enable

0: Counter disabled
1: Counter enabled

Note: External clock, gated mode and encoder mode can work only if the CEN bit has been previously set by software. However trigger mode can set the CEN bit automatically by hardware.

CEN is cleared automatically in one-pulse mode, when an update event occurs.

22.4.2 TIM2 control register 2 (TIM2_CR2)

Address offset: 0x04

Reset value: 0x0000

15	14	13	12	11	10	9	8	7	6	5	4	3	2	1	0
Res.	Res.	Res.	Res.	Res.	Res.	Res.	Res.	TI1S	MMS[2:0]			CCDS	Res.	Res.	Res.
								rw	rw	rw	rw	rw			

Bits 15:8 Reserved, must be kept at reset value.

Bit 7 **TI1S**: TI1 selection

0: The TIMx_CH1 pin is connected to TI1 input
1: The TIMx_CH1, CH2 and CH3 pins are connected to the TI1 input (XOR combination)
See also *Section 21.3.25: Interfacing with Hall sensors on page 573*

Bits 6:4 **MMS[2:0]**: Master mode selection

These bits permit to select the information to be sent in master mode to slave timers for synchronization (TRGO). The combination is as follows:

000: **Reset** - the UG bit from the TIMx_EGR register is used as trigger output (TRGO). If the reset is generated by the trigger input (slave mode controller configured in reset mode) then the signal on TRGO is delayed compared to the actual reset.

001: **Enable** - the Counter enable signal, CNT_EN, is used as trigger output (TRGO). It is useful to start several timers at the same time or to control a window in which a slave timer is enabled. The Counter Enable signal is generated by a logic AND between CEN control bit and the trigger input when configured in gated mode.

When the Counter Enable signal is controlled by the trigger input, there is a delay on TRGO, except if the master/slave mode is selected (see the MSM bit description in TIMx_SMCR register).

010: **Update** - The update event is selected as trigger output (TRGO). For instance a master timer can then be used as a prescaler for a slave timer.

011: **Compare Pulse** - The trigger output send a positive pulse when the CC1IF flag is to be set (even if it was already high), as soon as a capture or a compare match occurred. (TRGO)

100: **Compare** - OC1REFC signal is used as trigger output (TRGO)

101: **Compare** - OC2REFC signal is used as trigger output (TRGO)

110: **Compare** - OC3REFC signal is used as trigger output (TRGO)

111: **Compare** - OC4REFC signal is used as trigger output (TRGO)

Note: The clock of the slave timer or ADC must be enabled prior to receive events from the master timer, and must not be changed on-the-fly while triggers are received from the master timer.

Bit 3 **CCDS**: Capture/compare DMA selection

0: CCx DMA request sent when CCx event occurs

1: CCx DMA requests sent when update event occurs

Bits 2:0 Reserved, must be kept at reset value.

22.4.3 TIM2 slave mode control register (TIM2_SMCR)

Address offset: 0x08

Reset value: 0x0000 0000

31	30	29	28	27	26	25	24	23	22	21	20	19	18	17	16
Res.	Res.	Res.	Res.	Res.	Res.	Res.	Res.	Res.	Res.	TS[4:3]		Res.	Res.	Res.	SMS[3]
										rw	rw				rw

15	14	13	12	11	10	9	8	7	6	5	4	3	2	1	0
ETP	ECE	ETPS[1:0]		ETF[3:0]				MSM	TS[2:0]			OCCS	SMS[2:0]		
rw	rw	rw	rw	rw	rw	rw	rw	rw	rw	rw	rw	rw	rw	rw	rw

Bits 31:22 Reserved, must be kept at reset value.

Bits 19:17 Reserved, must be kept at reset value.

Bit 15 **ETP**: External trigger polarity

This bit selects whether ETR or $\overline{ETR}$ is used for trigger operations

0: ETR is non-inverted, active at high level or rising edge

1: ETR is inverted, active at low level or falling edge

Bit 14 **ECE**: External clock enable

This bit enables External clock mode 2.

0: External clock mode 2 disabled

1: External clock mode 2 enabled. The counter is clocked by any active edge on the ETRF signal.

Note: Setting the ECE bit has the same effect as selecting external clock mode 1 with TRGI connected to ETRF (SMS=111 and TS=00111).

It is possible to simultaneously use external clock mode 2 with the following slave modes: reset mode, gated mode and trigger mode. Nevertheless, TRGI must not be connected to ETRF in this case (TS bits must not be 00111).

If external clock mode 1 and external clock mode 2 are enabled at the same time, the external clock input is ETRF.

Bits 13:12 **ETPS[1:0]**: External trigger prescaler

External trigger signal ETRP frequency must be at most 1/4 of CK_INT frequency. A prescaler can be enabled to reduce ETRP frequency. It is useful when inputting fast external clocks.

00: Prescaler OFF

01: ETRP frequency divided by 2

10: ETRP frequency divided by 4

11: ETRP frequency divided by 8

Bits 11:8 **ETF[3:0]**: External trigger filter

This bit-field then defines the frequency used to sample ETRP signal and the length of the digital filter applied to ETRP. The digital filter is made of an event counter in which N consecutive events are needed to validate a transition on the output:

0000: No filter, sampling is done at f_{DTS}
0001: $f_{SAMPLING}=f_{CK_INT}$, N=2
0010: $f_{SAMPLING}=f_{CK_INT}$, N=4
0011: $f_{SAMPLING}=f_{CK_INT}$, N=8
0100: $f_{SAMPLING}=f_{DTS}/2$, N=6
0101: $f_{SAMPLING}=f_{DTS}/2$, N=8
0110: $f_{SAMPLING}=f_{DTS}/4$, N=6
0111: $f_{SAMPLING}=f_{DTS}/4$, N=8
1000: $f_{SAMPLING}=f_{DTS}/8$, N=6
1001: $f_{SAMPLING}=f_{DTS}/8$, N=8
1010: $f_{SAMPLING}=f_{DTS}/16$, N=5
1011: $f_{SAMPLING}=f_{DTS}/16$, N=6
1100: $f_{SAMPLING}=f_{DTS}/16$, N=8
1101: $f_{SAMPLING}=f_{DTS}/32$, N=5
1110: $f_{SAMPLING}=f_{DTS}/32$, N=6
1111: $f_{SAMPLING}=f_{DTS}/32$, N=8

Bit 7 **MSM**: Master/Slave mode

0: No action
1: The effect of an event on the trigger input (TRGI) is delayed to allow a perfect synchronization between the current timer and its slaves (through TRGO). It is useful if we want to synchronize several timers on a single external event.

Bits 21, 20, 6, 5, 4 **TS[4:0]**: Trigger selection

This bit-field selects the trigger input to be used to synchronize the counter.
00000: Internal Trigger 0 (ITR0)
00001: Internal Trigger 1 (ITR1)
00010: Internal Trigger 2 (ITR2)
00011: Internal Trigger 3 (ITR3)
00100: TI1 Edge Detector (TI1F_ED)
00101: Filtered Timer Input 1 (TI1FP1)
00110: Filtered Timer Input 2 (TI2FP2)
00111: External Trigger input (ETRF)
01000: Internal Trigger 4 (ITR4)
01001: Internal Trigger 5 (ITR5)
01010: Internal Trigger 6 (ITR6)
01011: Internal Trigger 7 (ITR7)
01100: Internal Trigger 8 (ITR8)
Others: Reserved
See *Table 140: TIM2 internal trigger connection on page 672* for more details on ITRx meaning for each Timer.

Note: These bits must be changed only when they are not used (e.g. when SMS=000) to avoid wrong edge detections at the transition.

Bit 3 **OCCS**: OCREF clear selection

This bit is used to select the OCREF clear source
0: OCREF_CLR_INT is connected to the OCREF_CLR input
1: OCREF_CLR_INT is connected to ETRF

Bits 16, 2, 1, 0 **SMS[3:0]**: Slave mode selection

When external signals are selected the active edge of the trigger signal (TRGI) is linked to the polarity selected on the external input (see Input Control register and Control Register description.

0000: Slave mode disabled - if CEN = ‘1 then the prescaler is clocked directly by the internal clock.

0001: Encoder mode 1 - Counter counts up/down on TI1FP1 edge depending on TI2FP2 level.

0010: Encoder mode 2 - Counter counts up/down on TI2FP2 edge depending on TI1FP1 level.

0011: Encoder mode 3 - Counter counts up/down on both TI1FP1 and TI2FP2 edges depending on the level of the other input.

0100: Reset Mode - Rising edge of the selected trigger input (TRGI) reinitializes the counter and generates an update of the registers.

0101: Gated Mode - The counter clock is enabled when the trigger input (TRGI) is high. The counter stops (but is not reset) as soon as the trigger becomes low. Both start and stop of the counter are controlled.

0110: Trigger Mode - The counter starts at a rising edge of the trigger TRGI (but it is not reset). Only the start of the counter is controlled.

0111: External Clock Mode 1 - Rising edges of the selected trigger (TRGI) clock the counter.

1000: Combined reset + trigger mode - Rising edge of the selected trigger input (TRGI) reinitializes the counter, generates an update of the registers and starts the counter.

Note: The gated mode must not be used if TI1F_ED is selected as the trigger input (TS=00100). Indeed, TI1F_ED outputs 1 pulse for each transition on TI1F, whereas the gated mode checks the level of the trigger signal.

Note: The clock of the slave peripherals (timer, ADC, ...) receiving the TRGO signal must be enabled prior to receive events from the master timer, and the clock frequency (prescaler) must not be changed on-the-fly while triggers are received from the master timer.

Table 140. TIM2 internal trigger connection

Slave TIM	ITR0	ITR1	ITR2 - ITR8
TIM2	TIM1	-	-

22.4.4 TIM2 DMA/Interrupt enable register (TIM2_DIER)

Address offset: 0x0C

Reset value: 0x0000

15	14	13	12	11	10	9	8	7	6	5	4	3	2	1	0
Res.	Res.	Res.	CC4DE	CC3DE	CC2DE	CC1DE	UDE	Res.	TIE	Res.	CC4IE	CC3IE	CC2IE	CC1IE	UIE
			rw	rw	rw	rw	rw		rw		rw	rw	rw	rw	rw

Bits 15:14 Reserved, must be kept at reset value.

Bit 13 Reserved, must be kept at reset value.

Bit 12 **CC4DE**: Capture/Compare 4 DMA request enable

0: CC4 DMA request disabled.

1: CC4 DMA request enabled.

Bit 11 **CC3DE**: Capture/Compare 3 DMA request enable
0: CC3 DMA request disabled.
1: CC3 DMA request enabled.

Bit 10 **CC2DE**: Capture/Compare 2 DMA request enable
0: CC2 DMA request disabled.
1: CC2 DMA request enabled.

Bit 9 **CC1DE**: Capture/Compare 1 DMA request enable
0: CC1 DMA request disabled.
1: CC1 DMA request enabled.

Bit 8 **UDE**: Update DMA request enable
0: Update DMA request disabled.
1: Update DMA request enabled.

Bit 7 Reserved, must be kept at reset value.

Bit 6 **TIE**: Trigger interrupt enable
0: Trigger interrupt disabled.
1: Trigger interrupt enabled.

Bit 5 Reserved, must be kept at reset value.

Bit 4 **CC4IE**: Capture/Compare 4 interrupt enable
0: CC4 interrupt disabled.
1: CC4 interrupt enabled.

Bit 3 **CC3IE**: Capture/Compare 3 interrupt enable
0: CC3 interrupt disabled.
1: CC3 interrupt enabled.

Bit 2 **CC2IE**: Capture/Compare 2 interrupt enable
0: CC2 interrupt disabled.
1: CC2 interrupt enabled.

Bit 1 **CC1IE**: Capture/Compare 1 interrupt enable
0: CC1 interrupt disabled.
1: CC1 interrupt enabled.

Bit 0 **UIE**: Update interrupt enable
0: Update interrupt disabled.
1: Update interrupt enabled.

22.4.5 TIM2 status register (TIM2_SR)

Address offset: 0x10

Reset value: 0x0000

15	14	13	12	11	10	9	8	7	6	5	4	3	2	1	0
Res.	Res.	Res.	CC4OF	CC3OF	CC2OF	CC1OF	Res.	Res.	TIF	Res.	CC4IF	CC3IF	CC2IF	CC1IF	UIF
			rc_w0	rc_w0	rc_w0	rc_w0			rc_w0		rc_w0	rc_w0	rc_w0	rc_w0	rc_w0

Bits 15:13 Reserved, must be kept at reset value.

Bit 12 **CC4OF**: Capture/Compare 4 overcapture flag
refer to CC1OF description

Bit 11 **CC3OF**: Capture/Compare 3 overcapture flag
refer to CC1OF description

Bit 10 **CC2OF**: Capture/compare 2 overcapture flag
refer to CC1OF description

Bit 9 **CC1OF**: Capture/Compare 1 overcapture flag
This flag is set by hardware only when the corresponding channel is configured in input capture mode. It is cleared by software by writing it to ‘0’.
0: No overcapture has been detected.
1: The counter value has been captured in TIMx_CCR1 register while CC1IF flag was already set

Bits 8:7 Reserved, must be kept at reset value.

Bit 6 **TIF**: Trigger interrupt flag
This flag is set by hardware on the TRG trigger event (active edge detected on TRGI input when the slave mode controller is enabled in all modes but gated mode. It is set when the counter starts or stops when gated mode is selected. It is cleared by software.
0: No trigger event occurred.
1: Trigger interrupt pending.

Bit 5 Reserved, must be kept at reset value.

Bit 4 **CC4IF**: Capture/Compare 4 interrupt flag
Refer to CC1IF description

Bit 3 **CC3IF**: Capture/Compare 3 interrupt flag
Refer to CC1IF description

Bit 2 **CC2IF**: Capture/Compare 2 interrupt flag
Refer to CC1IF description

Bit 1 **CC1IF**: Capture/compare 1 interrupt flag
This flag is set by hardware. It is cleared by software (input capture or output compare mode) or by reading the TIMx_CCR1 register (input capture mode only).
0: No compare match / No input capture occurred
1: A compare match or an input capture occurred
If channel CC1 is configured as output: this flag is set when the content of the counter TIMx_CNT matches the content of the TIMx_CCR1 register. When the content of TIMx_CCR1 is greater than the content of TIMx_ARR, the CC1IF bit goes high on the counter overflow (in up-counting and up/down-counting modes) or underflow (in down-counting mode). There are 3 possible options for flag setting in center-aligned mode, refer to the CMS bits in the TIMx_CR1 register for the full description.
If channel CC1 is configured as input: this bit is set when counter value has been captured in TIMx_CCR1 register (an edge has been detected on IC1, as per the edge sensitivity defined with the CC1P and CC1NP bits setting, in TIMx_CCER).

Bit 0 **UIF**: Update interrupt flag
This bit is set by hardware on an update event. It is cleared by software.
0: No update occurred
1: Update interrupt pending. This bit is set by hardware when the registers are updated:
At overflow or underflow and if UDIS=0 in the TIMx_CR1 register.
When CNT is reinitialized by software using the UG bit in TIMx_EGR register, if URS=0 and UDIS=0 in the TIMx_CR1 register.
When CNT is reinitialized by a trigger event (refer to the synchro control register description), if URS=0 and UDIS=0 in the TIMx_CR1 register.

22.4.6 TIM2 event generation register (TIM2_EGR)

Address offset: 0x14

Reset value: 0x0000

15	14	13	12	11	10	9	8	7	6	5	4	3	2	1	0
Res.	Res.	Res.	Res.	Res.	Res.	Res.	Res.	Res.	TG	Res.	CC4G	CC3G	CC2G	CC1G	UG
									w		w	w	w	w	w

Bits 15:7 Reserved, must be kept at reset value.

Bit 6 **TG**: Trigger generation

This bit is set by software in order to generate an event, it is automatically cleared by hardware.

0: No action

1: The TIF flag is set in TIMx_SR register. Related interrupt or DMA transfer can occur if enabled.

Bit 5 Reserved, must be kept at reset value.

Bit 4 **CC4G**: Capture/compare 4 generation

Refer to CC1G description

Bit 3 **CC3G**: Capture/compare 3 generation

Refer to CC1G description

Bit 2 **CC2G**: Capture/compare 2 generation

Refer to CC1G description

Bit 1 **CC1G**: Capture/compare 1 generation

This bit is set by software in order to generate an event, it is automatically cleared by hardware.

0: No action

1: A capture/compare event is generated on channel 1:

If channel CC1 is configured as output:

CC1IF flag is set, Corresponding interrupt or DMA request is sent if enabled.

If channel CC1 is configured as input:

The current value of the counter is captured in TIMx_CCR1 register. The CC1IF flag is set, the corresponding interrupt or DMA request is sent if enabled. The CC1OF flag is set if the CC1IF flag was already high.

Bit 0 **UG**: Update generation

This bit can be set by software, it is automatically cleared by hardware.

0: No action

1: Re-initialize the counter and generates an update of the registers. Note that the prescaler counter is cleared too (anyway the prescaler ratio is not affected). The counter is cleared if the center-aligned mode is selected or if DIR=0 (upcounting), else it takes the auto-reload value (TIMx_ARR) if DIR=1 (downcounting).

22.4.7 TIM2 capture/compare mode register 1 (TIM2_CCMR1)

Address offset: 0x18

Reset value: 0x0000 0000

The same register can be used for input capture mode (this section) or for output compare mode (next section). The direction of a channel is defined by configuring the corresponding CCxS bits. All the other bits of this register have a different function in input and in output mode.

Input capture mode:

31	30	29	28	27	26	25	24	23	22	21	20	19	18	17	16
Res.	Res.	Res.	Res.	Res.	Res.	Res.	Res.	Res.	Res.	Res.	Res.	Res.	Res.	Res.	Res.

15	14	13	12	11	10	9	8	7	6	5	4	3	2	1	0
IC2F[3:0]				IC2PSC[1:0]		CC2S[1:0]		IC1F[3:0]				IC1PSC[1:0]		CC1S[1:0]	
rw	rw	rw	rw	rw	rw	rw	rw	rw	rw	rw	rw	rw	rw	rw	rw

Bits 31:16 Reserved, must be kept at reset value.

Bits 15:12 **IC2F[3:0]**: Input capture 2 filter

Bits 11:10 **IC2PSC[1:0]**: Input capture 2 prescaler

Bits 9:8 **CC2S[1:0]**: Capture/compare 2 selection

This bit-field defines the direction of the channel (input/output) as well as the used input.
00: CC2 channel is configured as output.
01: CC2 channel is configured as input, IC2 is mapped on TI2.
10: CC2 channel is configured as input, IC2 is mapped on TI1.
11: CC2 channel is configured as input, IC2 is mapped on TRC. This mode is working only if an internal trigger input is selected through TS bit (TIMx_SMCR register)

Note: CC2S bits are writable only when the channel is OFF (CC2E = 0 in TIMx_CCER).

Bits 7:4 **IC1F[3:0]**: Input capture 1 filter

This bit-field defines the frequency used to sample TI1 input and the length of the digital filter applied to TI1. The digital filter is made of an event counter in which N consecutive events are needed to validate a transition on the output:
0000: No filter, sampling is done at f_{DTS}
0001: $f_{SAMPLING}=f_{CK_INT}$, N=2
0010: $f_{SAMPLING}=f_{CK_INT}$, N=4
0011: $f_{SAMPLING}=f_{CK_INT}$, N=8
0100: $f_{SAMPLING}=f_{DTS}/2$, N=6
0101: $f_{SAMPLING}=f_{DTS}/2$, N=8
0110: $f_{SAMPLING}=f_{DTS}/4$, N=6
0111: $f_{SAMPLING}=f_{DTS}/4$, N=8
1000: $f_{SAMPLING}=f_{DTS}/8$, N=6
1001: $f_{SAMPLING}=f_{DTS}/8$, N=8
1010: $f_{SAMPLING}=f_{DTS}/16$, N=5
1011: $f_{SAMPLING}=f_{DTS}/16$, N=6
1100: $f_{SAMPLING}=f_{DTS}/16$, N=8
1101: $f_{SAMPLING}=f_{DTS}/32$, N=5
1110: $f_{SAMPLING}=f_{DTS}/32$, N=6
1111: $f_{SAMPLING}=f_{DTS}/32$, N=8

Bits 3:2 **IC1PSC[1:0]**: Input capture 1 prescaler

This bit-field defines the ratio of the prescaler acting on CC1 input (IC1). The prescaler is reset as soon as CC1E=0 (TIMx_CCER register).

00: no prescaler, capture is done each time an edge is detected on the capture input
01: capture is done once every 2 events
10: capture is done once every 4 events
11: capture is done once every 8 events

Bits 1:0 **CC1S[1:0]**: Capture/Compare 1 selection

This bit-field defines the direction of the channel (input/output) as well as the used input.

00: CC1 channel is configured as output
01: CC1 channel is configured as input, IC1 is mapped on TI1
10: CC1 channel is configured as input, IC1 is mapped on TI2
11: CC1 channel is configured as input, IC1 is mapped on TRC. This mode is working only if an internal trigger input is selected through TS bit (TIMx_SMCR register)

Note: CC1S bits are writable only when the channel is OFF (CC1E = 0 in TIMx_CCER).

22.4.8 TIM2 capture/compare mode register 1 [alternate] (TIM2_CCMR1)

Address offset: 0x18

Reset value: 0x0000 0000

The same register can be used for output compare mode (this section) or for input capture mode (previous section). The direction of a channel is defined by configuring the corresponding CCxS bits. All the other bits of this register have a different function in input and in output mode.

Output compare mode:

31	30	29	28	27	26	25	24	23	22	21	20	19	18	17	16
Res.	Res.	Res.	Res.	Res.	Res.	Res.	OC2M [3]	Res.	Res.	Res.	Res.	Res.	Res.	Res.	OC1M [3]
							rw								rw

15	14	13	12	11	10	9	8	7	6	5	4	3	2	1	0
OC2CE	OC2M[2:0]			OC2PE	OC2FE	CC2S[1:0]		OC1CE	OC1M[2:0]			OC1PE	OC1FE	CC1S[1:0]	
rw	rw	rw	rw	rw	rw	rw	rw	rw	rw	rw	rw	rw	rw	rw	rw

Bits 31:25 Reserved, must be kept at reset value.

Bits 23:17 Reserved, must be kept at reset value.

Bit 15 **OC2CE**: Output compare 2 clear enable

Bits 24, 14:12 **OC2M[3:0]**: Output compare 2 mode

refer to OC1M description on bits 6:4

Bit 11 **OC2PE**: Output compare 2 preload enable

Bit 10 **OC2FE**: Output compare 2 fast enable

Bits 9:8 **CC2S[1:0]**: Capture/Compare 2 selection

This bit-field defines the direction of the channel (input/output) as well as the used input.

00: CC2 channel is configured as output

01: CC2 channel is configured as input, IC2 is mapped on TI2

10: CC2 channel is configured as input, IC2 is mapped on TI1

11: CC2 channel is configured as input, IC2 is mapped on TRC. This mode is working only if an internal trigger input is selected through the TS bit (TIMx_SMCR register)

Note: CC2S bits are writable only when the channel is OFF (CC2E = 0 in TIMx_CCER).

Bit 7 **OC1CE**: Output compare 1 clear enable

0: OC1Ref is not affected by the ETRF input

1: OC1Ref is cleared as soon as a High level is detected on ETRF input

Bits 16, 6:4 **OC1M[3:0]**: Output compare 1 mode

These bits define the behavior of the output reference signal OC1REF from which OC1 and OC1N are derived. OC1REF is active high whereas OC1 and OC1N active level depends on CC1P and CC1NP bits.

0000: Frozen - The comparison between the output compare register TIMx_CCR1 and the counter TIMx_CNT has no effect on the outputs. This mode can be used when the timer serves as a software timebase. When the frozen mode is enabled during timer operation, the output keeps the state (active or inactive) it had before entering the frozen state.

0001: Set channel 1 to active level on match. OC1REF signal is forced high when the counter TIMx_CNT matches the capture/compare register 1 (TIMx_CCR1).

0010: Set channel 1 to inactive level on match. OC1REF signal is forced low when the counter TIMx_CNT matches the capture/compare register 1 (TIMx_CCR1).

0011: Toggle - OC1REF toggles when TIMx_CNT=TIMx_CCR1.

0100: Force inactive level - OC1REF is forced low.

0101: Force active level - OC1REF is forced high.

0110: PWM mode 1 - In upcounting, channel 1 is active as long as TIMx_CNT<TIMx_CCR1 else inactive. In downcounting, channel 1 is inactive (OC1REF=‘0) as long as TIMx_CNT>TIMx_CCR1 else active (OC1REF=1).

0111: PWM mode 2 - In upcounting, channel 1 is inactive as long as TIMx_CNT<TIMx_CCR1 else active. In downcounting, channel 1 is active as long as TIMx_CNT>TIMx_CCR1 else inactive.

1000: Retriggerable OPM mode 1 - In up-counting mode, the channel is active until a trigger event is detected (on TRGI signal). Then, a comparison is performed as in PWM mode 1 and the channels becomes inactive again at the next update. In down-counting mode, the channel is inactive until a trigger event is detected (on TRGI signal). Then, a comparison is performed as in PWM mode 1 and the channels becomes inactive again at the next update.

1001: Retriggerable OPM mode 2 - In up-counting mode, the channel is inactive until a trigger event is detected (on TRGI signal). Then, a comparison is performed as in PWM mode 2 and the channels becomes inactive again at the next update. In down-counting mode, the channel is active until a trigger event is detected (on TRGI signal). Then, a comparison is performed as in PWM mode 1 and the channels becomes active again at the next update.

1010: Reserved,

1011: Reserved,

1100: Combined PWM mode 1 - OC1REF has the same behavior as in PWM mode 1. OC1REFC is the logical OR between OC1REF and OC2REF.

1101: Combined PWM mode 2 - OC1REF has the same behavior as in PWM mode 2. OC1REFC is the logical AND between OC1REF and OC2REF.

1110: Asymmetric PWM mode 1 - OC1REF has the same behavior as in PWM mode 1. OC1REFC outputs OC1REF when the counter is counting up, OC2REF when it is counting down.

1111: Asymmetric PWM mode 2 - OC1REF has the same behavior as in PWM mode 2. OC1REFC outputs OC1REF when the counter is counting up, OC2REF when it is counting down.

Note: In PWM mode, the OCREF level changes only when the result of the comparison changes or when the output compare mode switches from “frozen” mode to “PWM” mode.

Note: The OC1M[3] bit is not contiguous, located in bit 16.

Bit 3 **OC1PE**: Output compare 1 preload enable

0: Preload register on TIMx_CCR1 disabled. TIMx_CCR1 can be written at anytime, the new value is taken in account immediately.

1: Preload register on TIMx_CCR1 enabled. Read/Write operations access the preload register. TIMx_CCR1 preload value is loaded in the active register at each update event.

Bit 2 **OC1FE**: Output compare 1 fast enable

This bit decreases the latency between a trigger event and a transition on the timer output. It must be used in one-pulse mode (OPM bit set in TIMx_CR1 register), to have the output pulse starting as soon as possible after the starting trigger.

0: CC1 behaves normally depending on counter and CCR1 values even when the trigger is ON. The minimum delay to activate CC1 output when an edge occurs on the trigger input is 5 clock cycles.

1: An active edge on the trigger input acts like a compare match on CC1 output. Then, OC is set to the compare level independently from the result of the comparison. Delay to sample the trigger input and to activate CC1 output is reduced to 3 clock cycles. OCFE acts only if the channel is configured in PWM1 or PWM2 mode.

Bits 1:0 **CC1S[1:0]**: Capture/Compare 1 selection

This bit-field defines the direction of the channel (input/output) as well as the used input.

00: CC1 channel is configured as output.

01: CC1 channel is configured as input, IC1 is mapped on TI1.

10: CC1 channel is configured as input, IC1 is mapped on TI2.

11: CC1 channel is configured as input, IC1 is mapped on TRC. This mode is working only if an internal trigger input is selected through TS bit (TIMx_SMCR register)

Note: CC1S bits are writable only when the channel is OFF (CC1E = 0 in TIMx_CCER).

22.4.9 TIM2 capture/compare mode register 2 (TIM2_CCMR2)

Address offset: 0x1C

Reset value: 0x0000 0000

The same register can be used for input capture mode (this section) or for output compare mode (next section). The direction of a channel is defined by configuring the corresponding CCxS bits. All the other bits of this register have a different function in input and in output mode.

Input capture mode:

31	30	29	28	27	26	25	24	23	22	21	20	19	18	17	16
Res.	Res.	Res.	Res.	Res.	Res.	Res.	Res.	Res.	Res.	Res.	Res.	Res.	Res.	Res.	Res.

15	14	13	12	11	10	9	8	7	6	5	4	3	2	1	0
IC4F[3:0]				IC4PSC[1:0]		CC4S[1:0]		IC3F[3:0]				IC3PSC[1:0]		CC3S[1:0]	
rw	rw	rw	rw	rw	rw	rw	rw	rw	rw	rw	rw	rw	rw	rw	rw

Bits 31:16 Reserved, must be kept at reset value.

Bits 15:12 **IC4F[3:0]**: Input capture 4 filter

Bits 11:10 **IC4PSC[1:0]**: Input capture 4 prescaler

Bits 9:8 **CC4S[1:0]**: Capture/Compare 4 selection

This bit-field defines the direction of the channel (input/output) as well as the used input.

00: CC4 channel is configured as output

01: CC4 channel is configured as input, IC4 is mapped on TI4

10: CC4 channel is configured as input, IC4 is mapped on TI3

11: CC4 channel is configured as input, IC4 is mapped on TRC. This mode is working only if an internal trigger input is selected through TS bit (TIMx_SMCR register)

Note: CC4S bits are writable only when the channel is OFF (CC4E = 0 in TIMx_CCER).

Bits 7:4 **IC3F[3:0]**: Input capture 3 filter

Bits 3:2 **IC3PSC[1:0]**: Input capture 3 prescaler

Bits 1:0 **CC3S[1:0]**: Capture/Compare 3 selection

This bit-field defines the direction of the channel (input/output) as well as the used input.
00: CC3 channel is configured as output
01: CC3 channel is configured as input, IC3 is mapped on TI3
10: CC3 channel is configured as input, IC3 is mapped on TI4
11: CC3 channel is configured as input, IC3 is mapped on TRC. This mode is working only if an internal trigger input is selected through TS bit (TIMx_SMCR register)

Note: CC3S bits are writable only when the channel is OFF (CC3E = 0 in TIMx_CCER).

22.4.10 TIM2 capture/compare mode register 2 [alternate] (TIM2_CCMR2)

Address offset: 0x1C

Reset value: 0x0000 0000

The same register can be used for output compare mode (this section) or for input capture mode (previous section). The direction of a channel is defined by configuring the corresponding CCxS bits. All the other bits of this register have a different function in input and in output mode.

Output compare mode:

31	30	29	28	27	26	25	24	23	22	21	20	19	18	17	16
Res.	Res.	Res.	Res.	Res.	Res.	Res.	OC4M [3]	Res.	Res.	Res.	Res.	Res.	Res.	Res.	OC3M [3]
							rw								rw

15	14	13	12	11	10	9	8	7	6	5	4	3	2	1	0
OC4CE	OC4M[2:0]			OC4PE	OC4FE	CC4S[1:0]		OC3CE	OC3M[2:0]			OC3PE	OC3FE	CC3S[1:0]	
rw	rw	rw	rw	rw	rw	rw	rw	rw	rw	rw	rw	rw	rw	rw	rw

Bits 31:25 Reserved, must be kept at reset value.

Bits 23:17 Reserved, must be kept at reset value.

Bit 15 **OC4CE**: Output compare 4 clear enable

Bits 24, 14:12 **OC4M[3:0]**: Output compare 4 mode

Refer to OC1M description (bits 6:4 in TIMx_CCMR1 register)

Bit 11 **OC4PE**: Output compare 4 preload enable

Bit 10 **OC4FE**: Output compare 4 fast enable

Bits 9:8 **CC4S[1:0]**: Capture/Compare 4 selection

This bit-field defines the direction of the channel (input/output) as well as the used input.
00: CC4 channel is configured as output
01: CC4 channel is configured as input, IC4 is mapped on TI4
10: CC4 channel is configured as input, IC4 is mapped on TI3
11: CC4 channel is configured as input, IC4 is mapped on TRC. This mode is working only if an internal trigger input is selected through TS bit (TIMx_SMCR register)

Note: CC4S bits are writable only when the channel is OFF (CC4E = 0 in TIMx_CCER).

Bit 7 **OC3CE**: Output compare 3 clear enable

Bits 16, 6:4 **OC3M[3:0]**: Output compare 3 mode
Refer to OC1M description (bits 6:4 in TIMx_CCMR1 register)

Bit 3 **OC3PE**: Output compare 3 preload enable

Bit 2 **OC3FE**: Output compare 3 fast enable

Bits 1:0 **CC3S[1:0]**: Capture/Compare 3 selection
This bit-field defines the direction of the channel (input/output) as well as the used input.
00: CC3 channel is configured as output
01: CC3 channel is configured as input, IC3 is mapped on TI3
10: CC3 channel is configured as input, IC3 is mapped on TI4
11: CC3 channel is configured as input, IC3 is mapped on TRC. This mode is working only if an internal trigger input is selected through TS bit (TIMx_SMCR register)

Note: CC3S bits are writable only when the channel is OFF (CC3E = 0 in TIMx_CCER).

22.4.11 TIM2 capture/compare enable register (TIM2_CCER)

Address offset: 0x20

Reset value: 0x0000

15	14	13	12	11	10	9	8	7	6	5	4	3	2	1	0
CC4NP	Res.	CC4P	CC4E	CC3NP	Res.	CC3P	CC3E	CC2NP	Res.	CC2P	CC2E	CC1NP	Res.	CC1P	CC1E
rw		rw	rw	rw		rw	rw	rw		rw	rw	rw		rw	rw

Bit 15 **CC4NP**: *Capture/Compare 4 output Polarity.*
Refer to CC1NP description

Bit 14 Reserved, must be kept at reset value.

Bit 13 **CC4P**: *Capture/Compare 4 output Polarity.*
Refer to CC1P description

Bit 12 **CC4E**: *Capture/Compare 4 output enable.*
refer to CC1E description

Bit 11 **CC3NP**: *Capture/Compare 3 output Polarity.*
Refer to CC1NP description

Bit 10 Reserved, must be kept at reset value.

Bit 9 **CC3P**: *Capture/Compare 3 output Polarity.*
Refer to CC1P description

Bit 8 **CC3E**: *Capture/Compare 3 output enable.*
Refer to CC1E description

Bit 7 **CC2NP**: *Capture/Compare 2 output Polarity.*
Refer to CC1NP description

Bit 6 Reserved, must be kept at reset value.

Bit 5 **CC2P**: *Capture/Compare 2 output Polarity.*
refer to CC1P description

Bit 4 **CC2E**: *Capture/Compare 2 output enable.*
Refer to CC1E description

Bit 3 **CC1NP**: *Capture/Compare 1 output Polarity.*

CC1 channel configured as output: CC1NP must be kept cleared in this case.

CC1 channel configured as input: This bit is used in conjunction with CC1P to define TI1FP1/TI2FP1 polarity. refer to CC1P description.

Bit 2 Reserved, must be kept at reset value.

Bit 1 **CC1P**: *Capture/Compare 1 output Polarity.*

0: OC1 active high (output mode) / Edge sensitivity selection (input mode, see below)

1: OC1 active low (output mode) / Edge sensitivity selection (input mode, see below)

When CC1 channel is configured as input, both CC1NP/CC1P bits select the active polarity of TI1FP1 and TI2FP1 for trigger or capture operations.

CC1NP=0, CC1P=0: non-inverted/rising edge. The circuit is sensitive to TIxFP1 rising edge (capture or trigger operations in reset, external clock or trigger mode), TIxFP1 is not inverted (trigger operation in gated mode or encoder mode).

CC1NP=0, CC1P=1: inverted/falling edge. The circuit is sensitive to TIxFP1 falling edge (capture or trigger operations in reset, external clock or trigger mode), TIxFP1 is inverted (trigger operation in gated mode or encoder mode).

CC1NP=1, CC1P=1: non-inverted/both edges. The circuit is sensitive to both TIxFP1 rising and falling edges (capture or trigger operations in reset, external clock or trigger mode), TIxFP1is not inverted (trigger operation in gated mode). This configuration must not be used in encoder mode.

CC1NP=1, CC1P=0: This configuration is reserved, it must not be used.

Bit 0 **CC1E**: *Capture/Compare 1 output enable.*

0: Capture mode disabled / OC1 is not active

1: Capture mode enabled / OC1 signal is output on the corresponding output pin

Table 141. Output control bit for standard OCx channels

CCxE bit	OCx output state
0	Output disabled (not driven by the timer: Hi-Z)
1	Output enabled (tim_ocx = tim_ocxref + Polarity)

Note: The state of the external IO pins connected to the standard OCx channels depends on the OCx channel state and the GPIO control and alternate function registers.

22.4.12 TIM2 counter (TIM2_CNT)

Bit 31 of this register has two possible definitions depending on the value of UIFREMAP in TIMx_CR1 register:

- This section is for UIFREMAP = 0
- Next section is for UIFREMAP = 1

Address offset: 0x24

Reset value: 0x0000 0000

31	30	29	28	27	26	25	24	23	22	21	20	19	18	17	16
CNT[31:16]															
rw	rw	rw	rw	rw	rw	rw	rw	rw	rw	rw	rw	rw	rw	rw	rw
15	14	13	12	11	10	9	8	7	6	5	4	3	2	1	0
CNT[15:0]															
rw	rw	rw	rw	rw	rw	rw	rw	rw	rw	rw	rw	rw	rw	rw	rw

Bits 31:0 **CNT[31:0]**: counter value

22.4.13 TIM2 counter [alternate] (TIM2_CNT)

Bit 31 of this register has two possible definitions depending on the value of UIFREMAP in TIMx_CR1 register:

- Previous section is for UIFREMAP = 0
- This section is for UIFREMAP = 1

Address offset: 0x24

Reset value: 0x0000 0000

31	30	29	28	27	26	25	24	23	22	21	20	19	18	17	16
UIFCPY	CNT[30:16]														
rw	rw	rw	rw	rw	rw	rw	rw	rw	rw	rw	rw	rw	rw	rw	rw
15	14	13	12	11	10	9	8	7	6	5	4	3	2	1	0
CNT[15:0]															
rw	rw	rw	rw	rw	rw	rw	rw	rw	rw	rw	rw	rw	rw	rw	rw

Bit 31 **UIFCPY**: UIF Copy

This bit is a read-only copy of the UIF bit of the TIMx_ISR register

Bits 30:0 **CNT[30:0]**: counter value

22.4.14 TIM2 prescaler (TIM2_PSC)

Address offset: 0x28

Reset value: 0x0000

15	14	13	12	11	10	9	8	7	6	5	4	3	2	1	0
PSC[15:0]															
rw	rw	rw	rw	rw	rw	rw	rw	rw	rw	rw	rw	rw	rw	rw	rw

Bits 15:0 **PSC[15:0]**: Prescaler value

The counter clock frequency CK_CNT is equal to f_{CK_PSC} / (PSC[15:0] + 1).

PSC contains the value to be loaded in the active prescaler register at each update event (including when the counter is cleared through UG bit of TIMx_EGR register or through trigger controller when configured in “reset mode”).

22.4.15 TIM2 auto-reload register (TIM2_ARR)

Address offset: 0x2C

Reset value: 0xFFFF FFFF

31	30	29	28	27	26	25	24	23	22	21	20	19	18	17	16
ARR[31:16]															
rw	rw	rw	rw	rw	rw	rw	rw	rw	rw	rw	rw	rw	rw	rw	rw
15	14	13	12	11	10	9	8	7	6	5	4	3	2	1	0
ARR[15:0]															
rw	rw	rw	rw	rw	rw	rw	rw	rw	rw	rw	rw	rw	rw	rw	rw

Bits 31:0 **ARR[31:0]**: Auto-reload value

ARR is the value to be loaded in the actual auto-reload register.

Refer to the *Section 22.3.1: Time-base unit on page 623* for more details about ARR update and behavior.

The counter is blocked while the auto-reload value is null.

22.4.16 TIM2 capture/compare register 1 (TIM2_CCR1)

Address offset: 0x34

Reset value: 0x0000 0000

31	30	29	28	27	26	25	24	23	22	21	20	19	18	17	16
CCR1[31:16]															
rw	rw	rw	rw	rw	rw	rw	rw	rw	rw	rw	rw	rw	rw	rw	rw
15	14	13	12	11	10	9	8	7	6	5	4	3	2	1	0
CCR1[15:0]															
rw	rw	rw	rw	rw	rw	rw	rw	rw	rw	rw	rw	rw	rw	rw	rw

Bits 31:0 **CCR1[31:0]**: Capture/Compare 1 value

If channel CC1 is configured as output:

CCR1 is the value to be loaded in the actual capture/compare 1 register (preload value).

It is loaded permanently if the preload feature is not selected in the TIMx_CCMR1 register (bit OC1PE). Else the preload value is copied in the active capture/compare 1 register when an update event occurs.

The active capture/compare register contains the value to be compared to the counter TIMx_CNT and signaled on OC1 output.

If channel CC1is configured as input:

CCR1 is the counter value transferred by the last input capture 1 event (IC1). The TIMx_CCR1 register is read-only and cannot be programmed.

22.4.17 TIM2 capture/compare register 2 (TIM2_CCR2)

Address offset: 0x38

Reset value: 0x0000 0000

31	30	29	28	27	26	25	24	23	22	21	20	19	18	17	16
CCR2[31:16]															
rw	rw	rw	rw	rw	rw	rw	rw	rw	rw	rw	rw	rw	rw	rw	rw
15	14	13	12	11	10	9	8	7	6	5	4	3	2	1	0
CCR2[15:0]															
rw	rw	rw	rw	rw	rw	rw	rw	rw	rw	rw	rw	rw	rw	rw	rw

Bits 31:0 **CCR2[31:0]**: Capture/Compare 2 value

If channel CC2 is configured as output:
CCR2 is the value to be loaded in the actual capture/compare 2 register (preload value).
It is loaded permanently if the preload feature is not selected in the TIMx_CCMR1 register (bit OC2PE). Else the preload value is copied in the active capture/compare 2 register when an update event occurs.
The active capture/compare register contains the value to be compared to the counter TIMx_CNT and signalled on OC2 output.
If channel CC2 is configured as input:
CCR2 is the counter value transferred by the last input capture 2 event (IC2). The TIMx_CCR2 register is read-only and cannot be programmed.

22.4.18 TIM2 capture/compare register 3 (TIM2_CCR3)

Address offset: 0x3C

Reset value: 0x0000 0000

31	30	29	28	27	26	25	24	23	22	21	20	19	18	17	16
CCR3[31:16]															
rw	rw	rw	rw	rw	rw	rw	rw	rw	rw	rw	rw	rw	rw	rw	rw
15	14	13	12	11	10	9	8	7	6	5	4	3	2	1	0
CCR3[15:0]															
rw	rw	rw	rw	rw	rw	rw	rw	rw	rw	rw	rw	rw	rw	rw	rw

Bits 31:0 **CCR3[31:0]**: Capture/Compare value

If channel CC3 is configured as output:
CCR3 is the value to be loaded in the actual capture/compare 3 register (preload value).
It is loaded permanently if the preload feature is not selected in the TIMx_CCMR2 register (bit OC3PE). Else the preload value is copied in the active capture/compare 3 register when an update event occurs.
The active capture/compare register contains the value to be compared to the counter TIMx_CNT and signalled on OC3 output.
If channel CC3is configured as input:
CCR3 is the counter value transferred by the last input capture 3 event (IC3). The TIMx_CCR3 register is read-only and cannot be programmed.

22.4.19 TIM2 capture/compare register 4 (TIM2_CCR4)

Address offset: 0x40

Reset value: 0x0000 0000

31	30	29	28	27	26	25	24	23	22	21	20	19	18	17	16
CCR4[31:16]															
rw	rw	rw	rw	rw	rw	rw	rw	rw	rw	rw	rw	rw	rw	rw	rw
15	14	13	12	11	10	9	8	7	6	5	4	3	2	1	0
CCR4[15:0]															
rw	rw	rw	rw	rw	rw	rw	rw	rw	rw	rw	rw	rw	rw	rw	rw

Bits 31:0 **CCR4[31:0]**: Capture/Compare value

1. if CC4 channel is configured as output (CC4S bits):
   CCR4 is the value to be loaded in the actual capture/compare 4 register (preload value). It is loaded permanently if the preload feature is not selected in the TIMx_CCMR2 register (bit OC4PE). Else the preload value is copied in the active capture/compare 4 register when an update event occurs.
   The active capture/compare register contains the value to be compared to the counter TIMx_CNT and signalled on OC4 output.
2. if CC4 channel is configured as input (CC4S bits in TIMx_CCMR4 register):
   CCR4 is the counter value transferred by the last input capture 4 event (IC4). The TIMx_CCR4 register is read-only and cannot be programmed.

22.4.20 TIM2 DMA control register (TIM2_DCR)

Address offset: 0x48

Reset value: 0x0000

15	14	13	12	11	10	9	8	7	6	5	4	3	2	1	0
Res.	Res.	Res.	DBL[4:0]					Res.	Res.	Res.	DBA[4:0]				
			rw	rw	rw	rw	rw				rw	rw	rw	rw	rw

Bits 15:13 Reserved, must be kept at reset value.

Bits 12:8 **DBL[4:0]**: DMA burst length

This 5-bit vector defines the number of DMA transfers (the timer recognizes a burst transfer when a read or a write access is done to the TIMx_DMAR address).
00000: 1 transfer,
00001: 2 transfers,
00010: 3 transfers,
...
10001: 18 transfers.

Bits 7:5 Reserved, must be kept at reset value.

Bits 4:0 **DBA[4:0]**: DMA base address

This 5-bit vector defines the base-address for DMA transfers (when read/write access are done through the TIMx_DMAR address). DBA is defined as an offset starting from the address of the TIMx_CR1 register.
Example:
00000: TIMx_CR1
00001: TIMx_CR2
00010: TIMx_SMCR
...
Example: Let us consider the following transfer: DBL = 7 transfers & DBA = TIMx_CR1. In this case the transfer is done to/from 7 registers starting from the TIMx_CR1 address.

22.4.21 TIM2 DMA address for full transfer (TIM2_DMAR)

Address offset: 0x4C

Reset value: 0x0000

15	14	13	12	11	10	9	8	7	6	5	4	3	2	1	0
DMAB[15:0]															
rw	rw	rw	rw	rw	rw	rw	rw	rw	rw	rw	rw	rw	rw	rw	rw

Bits 15:0 **DMAB[15:0]**: DMA register for burst accesses

A read or write operation to the DMAR register accesses the register located at the address

(TIMx_CR1 address) + (DBA + DMA index) x 4

where TIMx_CR1 address is the address of the control register 1, DBA is the DMA base address configured in TIMx_DCR register, DMA index is automatically controlled by the DMA transfer, and ranges from 0 to DBL (DBL configured in TIMx_DCR).

22.4.22 TIM2 option register 1 (TIM2_OR1)

Address offset: 0x50

Reset value: 0x0000 0000

31	30	29	28	27	26	25	24	23	22	21	20	19	18	17	16
Res.	Res.	Res.	Res.	Res.	Res.	Res.	Res.	Res.	Res.	Res.	Res.	Res.	Res.	Res.	Res.

15	14	13	12	11	10	9	8	7	6	5	4	3	2	1	0
Res.	Res.	Res.	Res.	Res.	Res.	Res.	Res.	Res.	Res.	Res.	Res.	Res.	TI4_ RMP	ETR_ RMP	Res.
													rw	rw	

Bits 31:3 Reserved, must be kept at reset value.

Bit 2 **TI4_RMP**: Timer input 4 remap

Set and cleared by software.

0: TIM2 TI4 is connected to GPIO: Refer to Alternate Function mapping

1: TIM2 TI4 is connected to COMP1_OUT

Bit 1 **ETR_RMP**: External trigger 1 remap

Set and cleared by software.

0: TIM2 ETR is connected to GPIO: Refer to Alternate Function mapping

1: LSE internal clock is connected to TIM2_ETR input

Bit 0 Reserved, must be kept at reset value.

22.4.23 TIM2 alternate function option register 1 (TIM2_AF1)

Address offset: 0x60

Reset value: 0x0000 0000

31	30	29	28	27	26	25	24	23	22	21	20	19	18	17	16
Res.	Res.	Res.	Res.	Res.	Res.	Res.	Res.	Res.	Res.	Res.	Res.	Res.	Res.	ETRSEL[3:2]	
														rw	rw

15	14	13	12	11	10	9	8	7	6	5	4	3	2	1	0
ETRSEL[1:0]		Res.	Res.	Res.	Res.	Res.	Res.	Res.	Res.	Res.	Res.	Res.	Res.	Res.	Res.
rw	rw														

Bits 31:18 Reserved, must be kept at reset value.

Bits 17:14 **ETRSEL[3:0]**: ETR source selection
These bits select the ETR input source.
0000: GPIO or LSE internal clock, as per ETR_RMP bit in TIM2_OR1
0001: COMP1
Others: Reserved

Bits 13:0 Reserved, must be kept at reset value.

22.4.24 TIM2 timer input selection register (TIM2_TISEL)

Address offset: 0x68

Reset value: 0x0000 0000

31	30	29	28	27	26	25	24	23	22	21	20	19	18	17	16
Res.	Res.	Res.	Res.	Res.	Res.	Res.	Res.	Res.	Res.	Res.	Res.	Res.	Res.	Res.	Res.

15	14	13	12	11	10	9	8	7	6	5	4	3	2	1	0
Res.	Res.	Res.	Res.	TI2SEL[3:0]				Res.	Res.	Res.	Res.	TI1SEL[3:0]			
				rw	rw	rw	rw					rw	rw	rw	rw

Bits 31:12 Reserved, must be kept at reset value.

Bits 11:8 **TI2SEL[3:0]**: TI2[0] to TI2[15] input selection
These bits select the TI2[0] to TI2[15] input source.
0000: TIM2_CH2 input
Others: Reserved

Bits 7:4 Reserved, must be kept at reset value.

Bits 3:0 **TI1SEL[3:0]**: TI1[0] to TI1[15] input selection
These bits select the TI1[0] to TI1[15] input source.
0000: TIM2_CH1 input
Others: Reserved

22.4.25 TIMx register map

TIMx registers are mapped as described in the table below:

Table 142. TIM2 register map and reset values

Offset	Register name	31	30	29	28	27	26	25	24	23	22	21	20	19	18	17	16	15	14	13	12	11	10	9	8	7	6	5	4	3	2	1	0
0x00	**TIMx_CR1**	Res.	Res.	Res.	Res.	Res.	Res.	Res.	Res.	Res.	Res.	Res.	Res.	Res.	Res.	Res.	Res.	Res.	Res.	Res.	Res.	UIFREMA	Res.	CKD [1:0]		ARPE	CMS [1:0]		DIR	OPM	URS	UDIS	CEN
	Reset value																					0		0	0	0	0	0	0	0	0	0	0
0x04	**TIMx_CR2**	Res.	Res.	Res.	Res.	Res.	Res.	Res.	Res.	Res.	Res.	Res.	Res.	Res.	Res.	Res.	Res.	Res.	Res.	Res.	Res.	Res.	Res.	Res.	Res.	TI1S	MMS[2:0]			CCDS	Res.	Res.	Res.
	Reset value																									0	0	0	0	0			
0x08	**TIMx_SMCR**	Res.	Res.	Res.	Res.	Res.	Res.	Res.	Res.	Res.	Res.	TS [4:3]		Res.	Res.	Res.	SMS[3]	ETP	ECE	ETPS [1:0]		ETF[3:0]				MSM	TS[2:0]			Res.	SMS[2:0]		
	Reset value											0	0				0	0	0	0	0	0	0	0	0	0	0	0	0		0	0	0
0x0C	**TIMx_DIER**	Res.	Res.	Res.	Res.	Res.	Res.	Res.	Res.	Res.	Res.	Res.	Res.	Res.	Res.	Res.	Res.	Res.	Res.	Res.	CC4DE	CC3DE	CC2DE	CC1DE	UDE	Res.	TIE	Res.	CC4IE	CC3IE	CC2IE	CC1IE	UIE
	Reset value																				0	0	0	0	0		0		0	0	0	0	0
0x10	**TIMx_SR**	Res.	Res.	Res.	Res.	Res.	Res.	Res.	Res.	Res.	Res.	Res.	Res.	Res.	Res.	Res.	Res.	Res.	Res.	Res.	CC4OF	CC3OF	CC2OF	CC1OF	Res.	Res.	TIF	Res.	CC4IF	CC3IF	CC2IF	CC1IF	UIF
	Reset value																				0	0	0	0			0		0	0	0	0	0
0x14	**TIMx_EGR**	Res.	Res.	Res.	Res.	Res.	Res.	Res.	Res.	Res.	Res.	Res.	Res.	Res.	Res.	Res.	Res.	Res.	Res.	Res.	Res.	Res.	Res.	Res.	Res.	Res.	TG	Res.	CC4G	CC3G	CC2G	CC1G	UG
	Reset value																										0		0	0	0	0	0
0x18	**TIMx_CCMR1** Output Compare mode	Res.	Res.	Res.	Res.	Res.	Res.	Res.	OC2M[3]	Res.	Res.	Res.	Res.	Res.	Res.	Res.	OC1M[3]	OC2CE	OC2M [2:0]			OC2PE	OC2FE	CC2S [1:0]		OC1CE	OC1M [2:0]			OC1PE	OC1FE	CC1S [1:0]	
	Reset value								0								0	0	0	0	0	0	0	0	0	0	0	0	0	0	0	0	0
	TIMx_CCMR1 Input Capture mode	Res.	Res.	Res.	Res.	Res.	Res.	Res.	Res.	Res.	Res.	Res.	Res.	Res.	Res.	Res.	Res.	IC2F[3:0]				IC2 PSC [1:0]		CC2S [1:0]		IC1F[3:0]				IC1 PSC [1:0]	CC1S [1:0]		
	Reset value																	0	0	0	0	0	0	0	0	0	0	0	0	0	0	0	0
0x1C	**TIMx_CCMR2** Output Compare mode	Res.	Res.	Res.	Res.	Res.	Res.	Res.	OC4M[3]	Res.	Res.	Res.	Res.	Res.	Res.	Res.	OC3M[3]	O24CE	OC4M [2:0]			OC4PE	OC4FE	CC4S [1:0]		OC3CE	OC3M [2:0]			OC3PE	OC3FE	CC3S [1:0]	
	Reset value								0								0	0	0	0	0	0	0	0	0	0	0	0	0	0	0	0	0
	TIMx_CCMR2 Input Capture mode	Res.	Res.	Res.	Res.	Res.	Res.	Res.	Res.	Res.	Res.	Res.	Res.	Res.	Res.	Res.	Res.	IC4F[3:0]				IC4 PSC [1:0]		CC4S [1:0]		IC3F[3:0]				IC3 PSC [1:0]	CC3S [1:0]		
	Reset value																	0	0	0	0	0	0	0	0	0	0	0	0	0	0	0	0
0x20	**TIMx_CCER**	Res.	Res.	Res.	Res.	Res.	Res.	Res.	Res.	Res.	Res.	Res.	Res.	Res.	Res.	Res.	Res.	CC4NP	Res.	CC4P	CC4E	CC3NP	Res.	CC3P	CC3E	CC2NP	Res.	CC2P	CC2E	CC1NP	Res.	CC1P	CC1E
	Reset value																	0		0	0	0		0	0	0		0	0	0		0	0

Table 142. TIM2 register map and reset values (continued)

Offset	Register name	31	30	29	28	27	26	25	24	23	22	21	20	19	18	17	16	15	14	13	12	11	10	9	8	7	6	5	4	3	2	1	0
0x24	**TIMx_CNT**	CNT[31] or UIFCPY	CNT[30:0]																														
	Reset value	0	0	0	0	0	0	0	0	0	0	0	0	0	0	0	0	0	0	0	0	0	0	0	0	0	0	0	0	0	0	0	0
0x28	**TIMx_PSC**	Res.	Res.	Res.	Res.	Res.	Res.	Res.	Res.	Res.	Res.	Res.	Res.	Res.	Res.	Res.	Res.	PSC[15:0]															
	Reset value																	0	0	0	0	0	0	0	0	0	0	0	0	0	0	0	0
0x2C	**TIMx_ARR**	ARR[31:0]																															
	Reset value	1	1	1	1	1	1	1	1	1	1	1	1	1	1	1	1	1	1	1	1	1	1	1	1	1	1	1	1	1	1	1	1
0x30	Reserved																																
0x34	**TIMx_CCR1**	CCR1[31:0]																															
	Reset value	0	0	0	0	0	0	0	0	0	0	0	0	0	0	0	0	0	0	0	0	0	0	0	0	0	0	0	0	0	0	0	0
0x38	**TIMx_CCR2**	CCR2[31:0]																															
	Reset value	0	0	0	0	0	0	0	0	0	0	0	0	0	0	0	0	0	0	0	0	0	0	0	0	0	0	0	0	0	0	0	0
0x3C	**TIMx_CCR3**	CCR3[31:0]																															
	Reset value	0	0	0	0	0	0	0	0	0	0	0	0	0	0	0	0	0	0	0	0	0	0	0	0	0	0	0	0	0	0	0	0
0x40	**TIMx_CCR4**	CCR4[31:0]																															
	Reset value	0	0	0	0	0	0	0	0	0	0	0	0	0	0	0	0	0	0	0	0	0	0	0	0	0	0	0	0	0	0	0	0
0x44	Reserved																																
0x48	**TIMx_DCR**	Res.	Res.	Res.	Res.	Res.	Res.	Res.	Res.	Res.	Res.	Res.	Res.	Res.	Res.	Res.	Res.	Res.	Res.	Res.	DBL[4:0]					Res.	Res.	Res.	DBA[4:0]				
	Reset value																				0	0	0	0	0				0	0	0	0	0
0x4C	**TIMx_DMAR**	Res.	Res.	Res.	Res.	Res.	Res.	Res.	Res.	Res.	Res.	Res.	Res.	Res.	Res.	Res.	Res.	DMAB[15:0]															
	Reset value																	0	0	0	0	0	0	0	0	0	0	0	0	0	0	0	0
0x50	**TIM2_OR1**	Res.	Res.	Res.	Res.	Res.	Res.	Res.	Res.	Res.	Res.	Res.	Res.	Res.	Res.	Res.	Res.	Res.	Res.	Res.	Res.	Res.	Res.	Res.	Res.	Res.	Res.	Res.	Res.	Res.	TI4_RMP	ETR_RMP	Res.
	Reset value																														0	0	
0x60	**TIM2_AF1**	Res.	Res.	Res.	Res.	Res.	Res.	Res.	Res.	Res.	Res.	Res.	Res.	Res.	Res.	ETRSEL [3:0]				Res.	Res.	Res.	Res.	Res.	Res.	Res.	Res.	Res.	Res.	Res.	Res.	Res.	Res.
	Reset value															0	0	0	0														

Table 142. TIM2 register map and reset values (continued)

Offset	Register name	31	30	29	28	27	26	25	24	23	22	21	20	19	18	17	16	15	14	13	12	11	10	9	8	7	6	5	4	3	2	1	0
0x68	TIM2_TISEL	Res.	Res.	Res.	Res.	Res.	Res.	Res.	Res.	Res.	Res.	Res.	Res.	Res.	Res.	Res.	Res.	Res.	Res.	Res.	Res.	TI2SEL[3:0]				Res.	Res.	Res.	Res.	TI1SEL[3:0]			
	Reset value																					0	0	0	0					0	0	0	0

Refer to *Section 2.2 on page 55* for the register boundary addresses.

23 Low-power timer (LPTIM)

23.1 Introduction

The LPTIM is a 16-bit timer that benefits from the ultimate developments in power consumption reduction. Thanks to its diversity of clock sources, the LPTIM is able to keep running in all power modes except for Standby mode. Given its capability to run even with no internal clock source, the LPTIM can be used as a “Pulse Counter” which can be useful in some applications. Also, the LPTIM capability to wake up the system from low-power modes, makes it suitable to realize “Timeout functions” with extremely low power consumption.

The LPTIM introduces a flexible clock scheme that provides the needed functionalities and performance, while minimizing the power consumption.

23.2 LPTIM main features

- 16 bit upcounter
- 3-bit prescaler with 8 possible dividing factors (1,2,4,8,16,32,64,128)
- Selectable clock
  - Internal clock sources: configurable internal clock source (see RCC section)
  - External clock source over LPTIM input (working with no embedded oscillator running, used by Pulse Counter application)
- 16 bit ARR autoreload register
- 16 bit compare register
- Continuous/One-shot mode
- Selectable software/hardware input trigger
- Programmable Digital Glitch filter
- Configurable output: Pulse, PWM
- Configurable I/O polarity
- Encoder mode

23.3 LPTIM implementation

Table 143 describes LPTIM implementation: the full set of features is implemented in LPTIM1. LPTIM2 supports a smaller set of features, but is otherwise identical to LPTIM1.

Table 143. LPTIM features

LPTIM modes/features(1)	LPTIM1	LPTIM2
Encoder mode	X	-
External input clock	X	X
Wake-up from Stop	(2)	(2)

1. X = supported.
2. Wake-up supported from Stop 0 and Stop 1 modes.

23.4 LPTIM functional description

23.4.1 LPTIM block diagram

Figure 205. Low-power timer block diagram

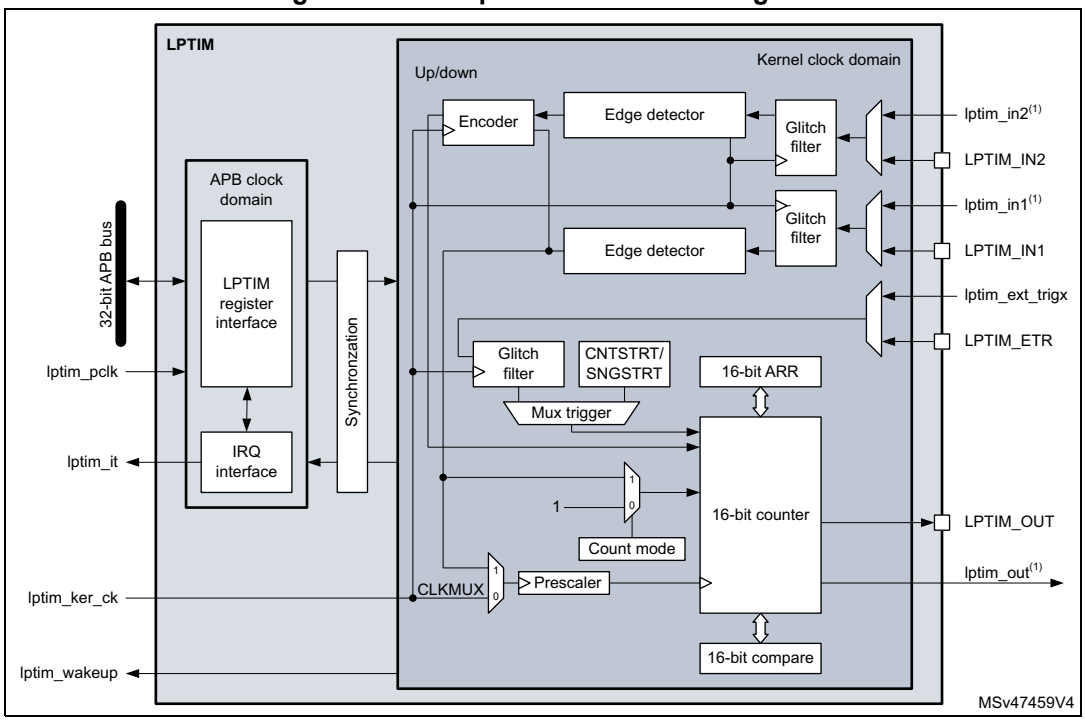

1. lptim_in1 and lptim_in2 are respectively internal LPTIM input 1 and input 2 signals that can be connected to internal peripherals. lptim_out is the internal LPTIM output signal that can be connected to internal peripherals.

23.4.2 LPTIM trigger mapping

The LPTIM external trigger connections are detailed hereafter:

Table 144. LPTIM1 external trigger connection

TRIGSEL	External trigger
lptim_ext_trig0	GPIO
lptim_ext_trig1	RTC alarm A
lptim_ext_trig2	RTC alarm B
lptim_ext_trig3	-
lptim_ext_trig4	RTC_TAMP2 input detection
lptim_ext_trig5	-
lptim_ext_trig6	COMP1_OUT
lptim_ext_trig7	Not connected

Table 145. LPTIM2 external trigger connection

TRIGSEL	External trigger
lptim_ext_trig0	GPIO
lptim_ext_trig1	RTC alarm A
lptim_ext_trig2	RTC alarm B
lptim_ext_trig3	-
lptim_ext_trig4	RTC_TAMP2 input detection
lptim_ext_trig5	-
lptim_ext_trig6	COMP1_OUT
lptim_ext_trig7	Not connected

23.4.3 LPTIM reset and clocks

The LPTIM can be clocked using several clock sources. It can be clocked using an internal clock signal which can be any configurable internal clock source selectable through the RCC (see RCC section for more details). Also, the LPTIM can be clocked using an external clock signal injected on its external Input1. When clocked with an external clock source, the LPTIM may run in one of these two possible configurations:

- The first configuration is when the LPTIM is clocked by an external signal but in the same time an internal clock signal is provided to the LPTIM from configurable internal clock source (see RCC section).
- The second configuration is when the LPTIM is solely clocked by an external clock source through its external Input1. This configuration is the one used to realize Timeout function or Pulse counter function when all the embedded oscillators are turned off after entering a low-power mode.

Programming the CKSEL and COUNTMODE bits allows controlling whether the LPTIM will use an external clock source or an internal one.

When configured to use an external clock source, the CKPOL bits are used to select the external clock signal active edge. If both edges are configured to be active ones, an internal clock signal should also be provided (first configuration). In this case, the internal clock signal frequency should be at least four times higher than the external clock signal frequency.

23.4.4 Glitch filter

The LPTIM inputs, either external (mapped to GPIOs) or internal (mapped on the chip-level to other embedded peripherals), are protected with digital filters that prevent any glitches and noise perturbations to propagate inside the LPTIM. This is in order to prevent spurious counts or triggers.

Before activating the digital filters, an internal clock source should first be provided to the LPTIM. This is necessary to guarantee the proper operation of the filters.

The digital filters are divided into two groups:

- The first group of digital filters protects the LPTIM external inputs. The digital filters sensitivity is controlled by the CKFLT bits
- The second group of digital filters protects the LPTIM internal trigger inputs. The digital filters sensitivity is controlled by the TRGFLT bits.

Note: The digital filters sensitivity is controlled by groups. It is not possible to configure each digital filter sensitivity separately inside the same group.

The filter sensitivity acts on the number of consecutive equal samples that should be detected on one of the LPTIM inputs to consider a signal level change as a valid transition. *Figure 206* shows an example of glitch filter behavior in case of a 2 consecutive samples programmed.

Figure 206. Glitch filter timing diagram

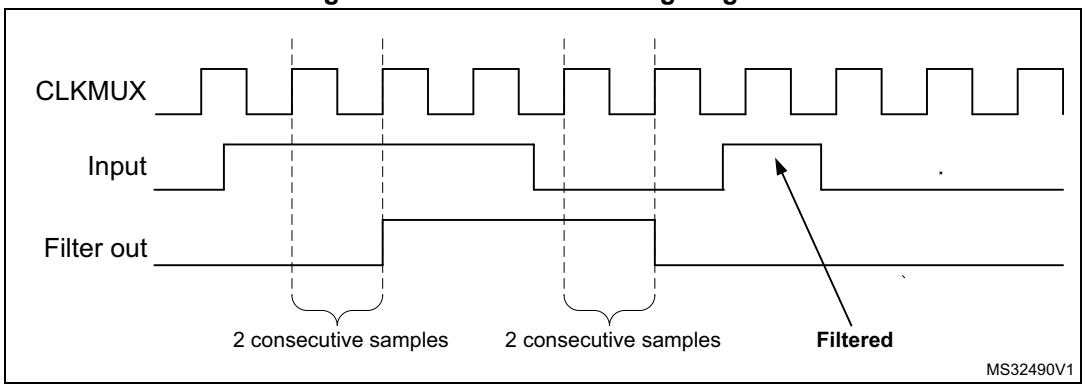

Note: In case no internal clock signal is provided, the digital filter must be deactivated by setting the CKFLT and TRGFLT bits to ‘0’. In that case, an external analog filter may be used to protect the LPTIM external inputs against glitches.

23.4.5 Prescaler

The LPTIM 16-bit counter is preceded by a configurable power-of-2 prescaler. The prescaler division ratio is controlled by the PRESC[2:0] 3-bit field. The table below lists all the possible division ratios:

Table 146. Prescaler division ratios

programming	dividing factor
000	/1
001	/2
010	/4
011	/8
100	/16
101	/32
110	/64
111	/128

23.4.6 Trigger multiplexer

The LPTIM counter may be started either by software or after the detection of an active edge on one of the 8 trigger inputs.

TRIGEN[1:0] is used to determine the LPTIM trigger source:

- When TRIGEN[1:0] equals ‘00’, The LPTIM counter is started as soon as one of the CNTSTRT or the SNGSTRT bits is set by software. The three remaining possible values for the TRIGEN[1:0] are used to configure the active edge used by the trigger inputs. The LPTIM counter starts as soon as an active edge is detected.
- When TRIGEN[1:0] is different than ‘00’, TRIGSEL[2:0] is used to select which of the 8 trigger inputs is used to start the counter.

The external triggers are considered asynchronous signals for the LPTIM. So after a trigger detection, a two-counter-clock period latency is needed before the timer starts running due to the synchronization.

If a new trigger event occurs when the timer is already started it will be ignored (unless timeout function is enabled).

Note: The timer must be enabled before setting the SNGSTRT/CNTSTRT bits. Any write on these bits when the timer is disabled will be discarded by hardware.

Note: When starting the counter by software (TRIGEN[1:0] = 00), there is a delay of 3 kernel clock cycles between the LPTIM_CR register update (set one of SNGSTRT or CNTSTRT bits) and the effective start of the counter.

23.4.7 Operating mode

The LPTIM features two operating modes:

- The Continuous mode: the timer is free running, the timer is started from a trigger event and never stops until the timer is disabled
- One-shot mode: the timer is started from a trigger event and stops when reaching the ARR value.

One-shot mode

To enable the one-shot counting, the SNGSTRT bit must be set.

A new trigger event will re-start the timer. Any trigger event occurring after the counter starts and before the counter reaches ARR will be discarded.

In case an external trigger is selected, each external trigger event arriving after the SNGSTRT bit is set, and after the counter register has stopped (contains zero value), will start the counter for a new one-shot counting cycle as shown in *Figure 207*.

Figure 207. LPTIM output waveform, single counting mode configuration

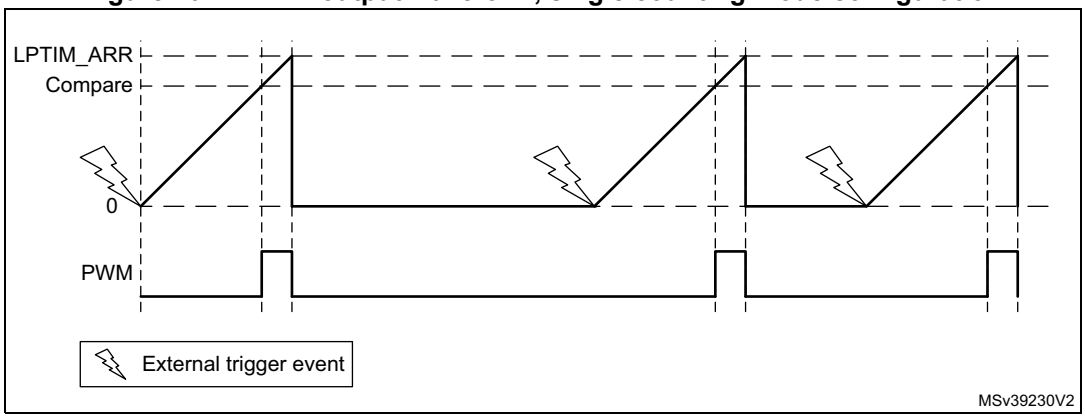

Set-once mode activated:

It should be noted that when the WAVE bit-field in the LPTIM_CFGR register is set, the Set-once mode is activated. In this case, the counter is only started once following the first trigger, and any subsequent trigger event is discarded as shown in *Figure 208*.

Figure 208. LPTIM output waveform, Single counting mode configuration and Set-once mode activated (WAVE bit is set)

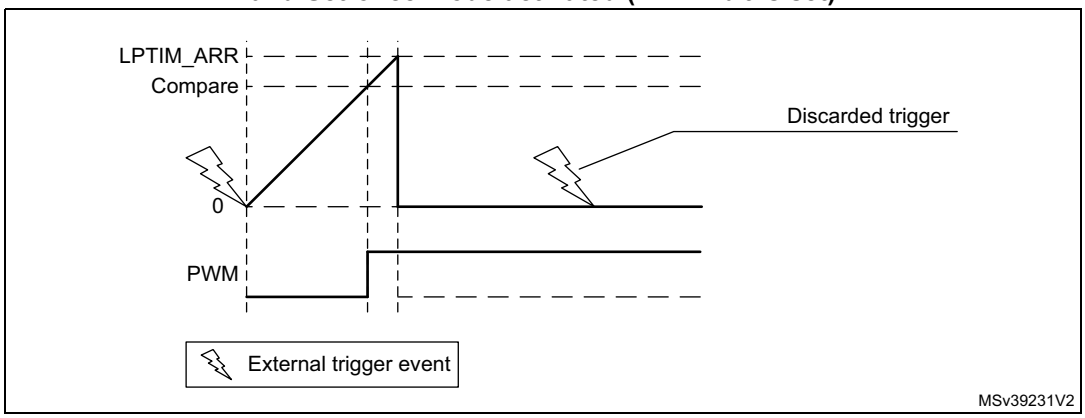

In case of software start (TRIGEN[1:0] = ‘00’), the SNGSTRT setting will start the counter for one-shot counting.

Continous mode

To enable the continuous counting, the CNTSTRT bit must be set.

In case an external trigger is selected, an external trigger event arriving after CNTSTRT is set will start the counter for continuous counting. Any subsequent external trigger event will be discarded as shown in *Figure 209*.

In case of software start (TRIGEN[1:0] = ‘00’), setting CNTSTRT will start the counter for continuous counting.

Figure 209. LPTIM output waveform, Continuous counting mode configuration

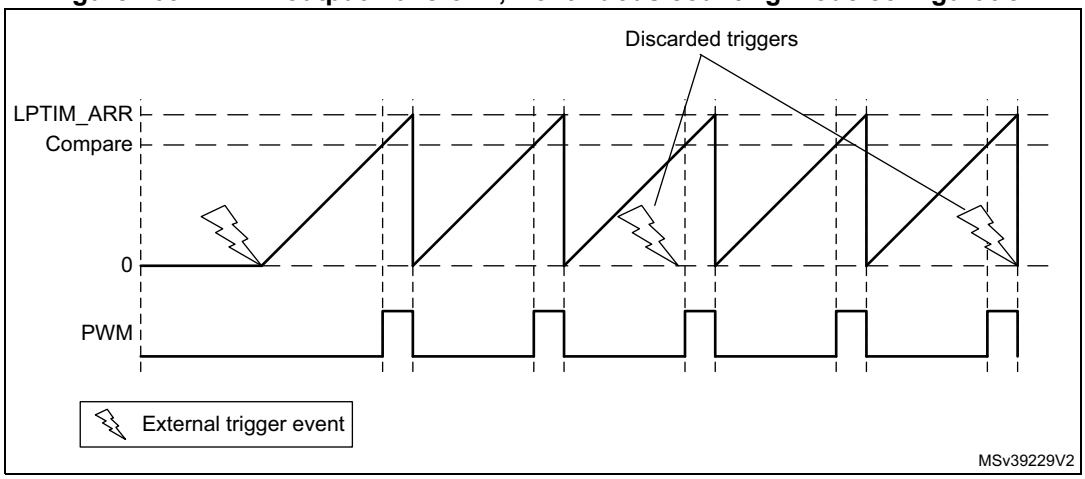

SNGSTRT and CNTSTRT bits can only be set when the timer is enabled (The ENABLE bit is set to ‘1’). It is possible to change “on the fly” from One-shot mode to Continuous mode.

If the Continuous mode was previously selected, setting SNGSTRT will switch the LPTIM to the One-shot mode. The counter (if active) will stop as soon as it reaches ARR.

If the One-shot mode was previously selected, setting CNTSTRT will switch the LPTIM to the Continuous mode. The counter (if active) will restart as soon as it reaches ARR.

23.4.8 Timeout function

The detection of an active edge on one selected trigger input can be used to reset the LPTIM counter. This feature is controlled through the TIMOUT bit.

The first trigger event will start the timer, any successive trigger event will reset the counter and the timer will restart.

A low-power timeout function can be realized. The timeout value corresponds to the compare value; if no trigger occurs within the expected time frame, the MCU is waked-up by the compare match event.

23.4.9 Waveform generation

Two 16-bit registers, the LPTIM_ARR (autoreload register) and LPTIM_CMP (compare register), are used to generate several different waveforms on LPTIM output

The timer can generate the following waveforms:

- The PWM mode: the LPTIM output is set as soon as the counter value in LPTIM_CNT exceeds the compare value in LPTIM_CMP. The LPTIM output is reset as soon as a match occurs between the LPTIM_ARR and the LPTIM_CNT registers.
- The One-pulse mode: the output waveform is similar to the one of the PWM mode for the first pulse, then the output is permanently reset
- The Set-once mode: the output waveform is similar to the One-pulse mode except that the output is kept to the last signal level (depends on the output configured polarity).

The above described modes require that the LPTIM_ARR register value be strictly greater than the LPTIM_CMP register value.

The LPTIM output waveform can be configured through the WAVE bit as follow:

- Resetting the WAVE bit to ‘0’ forces the LPTIM to generate either a PWM waveform or a One pulse waveform depending on which bit is set: CNTSTRT or SNGSTRT.
- Setting the WAVE bit to ‘1’ forces the LPTIM to generate a Set-once mode waveform.

The WAVPOL bit controls the LPTIM output polarity. The change takes effect immediately, so the output default value will change immediately after the polarity is re-configured, even before the timer is enabled.

Signals with frequencies up to the LPTIM clock frequency divided by 2 can be generated. *Figure 210* below shows the three possible waveforms that can be generated on the LPTIM output. Also, it shows the effect of the polarity change using the WAVPOL bit.

Figure 210. Waveform generation

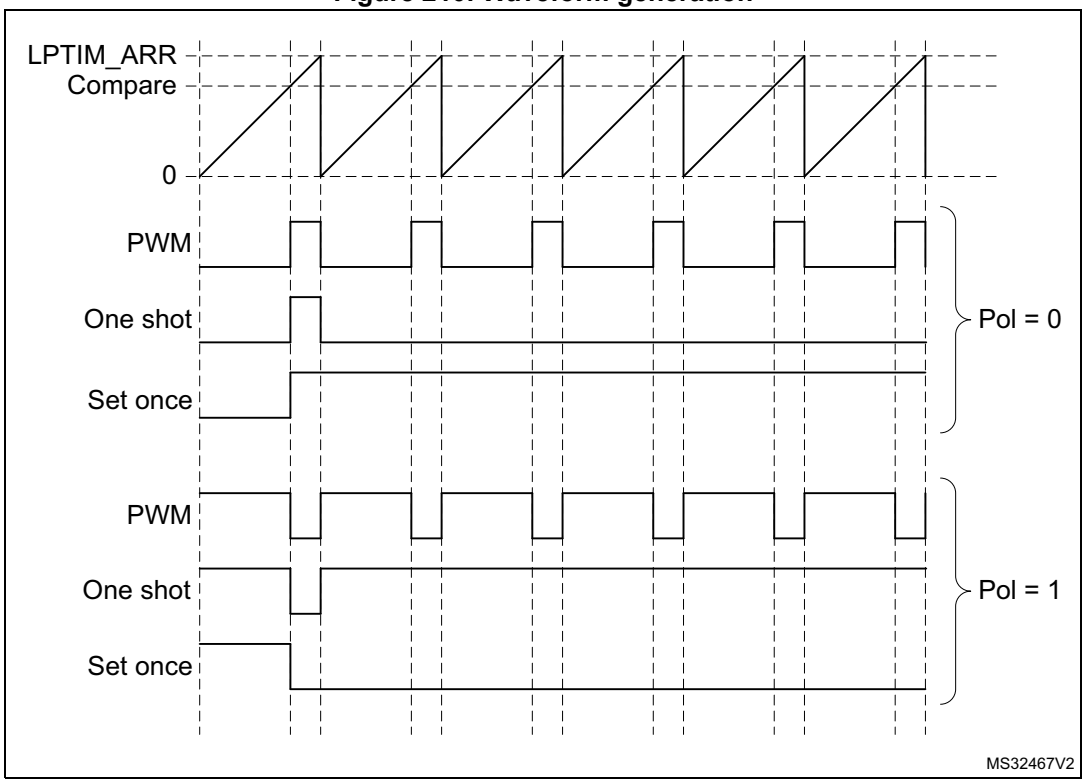

23.4.10 Register update

The LPTIM_ARR register and LPTIM_CMP register are updated immediately after the APB bus write operation, or at the end of the current period if the timer is already started.

The PRELOAD bit controls how the LPTIM_ARR and the LPTIM_CMP registers are updated:

- When the PRELOAD bit is reset to ‘0’, the LPTIM_ARR and the LPTIM_CMP registers are immediately updated after any write access.
- When the PRELOAD bit is set to ‘1’, the LPTIM_ARR and the LPTIM_CMP registers are updated at the end of the current period, if the timer has been already started.

The LPTIM APB interface and the LPTIM kernel logic use different clocks, so there is some latency between the APB write and the moment when these values are available to the counter comparator. Within this latency period, any additional write into these registers must be avoided.

The ARROK flag and the CMPOK flag in the LPTIM_ISR register indicate when the write operation is completed to respectively the LPTIM_ARR register and the LPTIM_CMP register.

After a write to the LPTIM_ARR register or the LPTIM_CMP register, a new write operation to the same register can only be performed when the previous write operation is completed. Any successive write before respectively the ARROK flag or the CMPOK flag be set, will lead to unpredictable results.

23.4.11 Counter mode

The LPTIM counter can be used to count external events on the LPTIM Input1 or it can be used to count internal clock cycles. The CKSEL and COUNTMODE bits control which source will be used for updating the counter.

In case the LPTIM is configured to count external events on Input1, the counter can be updated following a rising edge, falling edge or both edges depending on the value written to the CKPOL[1:0] bits.

The count modes below can be selected, depending on CKSEL and COUNTMODE values:

- CKSEL = 0: the LPTIM is clocked by an internal clock source
  - COUNTMODE = 0

    The LPTIM is configured to be clocked by an internal clock source and the LPTIM counter is configured to be updated following each internal clock pulse.
  - COUNTMODE = 1

    The LPTIM external Input1 is sampled with the internal clock provided to the LPTIM.

    Consequently, in order not to miss any event, the frequency of the changes on the external Input1 signal should never exceed the frequency of the internal clock provided to the LPTIM. Also, the internal clock provided to the LPTIM must not be prescaled (PRESC[2:0] = 000).
- CKSEL = 1: the LPTIM is clocked by an external clock source

  COUNTMODE value is don’t care.

  In this configuration, the LPTIM has no need for an internal clock source (except if the glitch filters are enabled). The signal injected on the LPTIM external Input1 is used as

system clock for the LPTIM. This configuration is suitable for operation modes where no embedded oscillator is enabled.

For this configuration, the LPTIM counter can be updated either on rising edges or falling edges of the input1 clock signal but not on both rising and falling edges.

Since the signal injected on the LPTIM external Input1 is also used to clock the LPTIM kernel logic, there is some initial latency (after the LPTIM is enabled) before the counter is incremented. More precisely, the first five active edges on the LPTIM external Input1 (after LPTIM is enable) are lost.

23.4.12 Timer enable

The ENABLE bit located in the LPTIM_CR register is used to enable/disable the LPTIM kernel logic. After setting the ENABLE bit, a delay of two counter clock is needed before the LPTIM is actually enabled.

The LPTIM_CFGR and LPTIM_IER registers must be modified only when the LPTIM is disabled.

23.4.13 Timer counter reset

In order to reset the content of LPTIM_CNT register to zero, two reset mechanisms are implemented:

- The synchronous reset mechanism: the synchronous reset is controlled by the COUNTRST bit in the LPTIM_CR register. After setting the COUNTRST bit-field to '1', the reset signal is propagated in the LPTIM kernel clock domain. So it is important to note that a few clock pulses of the LPTIM kernel logic will elapse before the reset is taken into account. This will make the LPTIM counter count few extra pluses between the time when the reset is trigger and it become effective. Since the COUNTRST bit is located in the APB clock domain and the LPTIM counter is located in the LPTIM kernel clock domain, a delay of 3 clock cycles of the kernel clock is needed to synchronize the reset signal issued by the APB clock domain when writing '1' to the COUNTRST bit.
- The asynchronous reset mechanism: the asynchronous reset is controlled by the RSTARE bit located in the LPTIM_CR register. When this bit is set to '1', any read access to the LPTIM_CNT register will reset its content to zero. Asynchronous reset should be triggered within a timeframe in which no LPTIM core clock is provided. For example when LPTIM Input1 is used as external clock source, the asynchronous reset should be applied only when there is enough insurance that no toggle will occur on the LPTIM Input1.
  It should be noted that to read reliably the content of the LPTIM_CNT register two successive read accesses must be performed and compared. A read access can be considered reliable when the value of the two read accesses is equal. Unfortunately when asynchronous reset is enabled there is no possibility to read twice the LPTIM_CNT register.

Warning: There is no mechanism inside the LPTIM that prevents the two reset mechanisms from being used simultaneously. So developer should make sure that these two mechanisms are used exclusively.

23.4.14 Encoder mode

This mode allows handling signals from quadrature encoders used to detect angular position of rotary elements. Encoder interface mode acts simply as an external clock with direction selection. This means that the counter just counts continuously between 0 and the auto-reload value programmed into the LPTIM_ARR register (0 up to ARR or ARR down to 0 depending on the direction). Therefore LPTIM_ARR must be configured before starting the counter. From the two external input signals, Input1 and Input2, a clock signal is generated to clock the LPTIM counter. The phase between those two signals determines the counting direction.

The Encoder mode is only available when the LPTIM is clocked by an internal clock source. The signals frequency on both Input1 and Input2 inputs must not exceed the LPTIM internal clock frequency divided by 4. This is mandatory in order to guarantee a proper operation of the LPTIM.

Direction change is signalized by the two Down and Up flags in the LPTIM_ISR register. Also, an interrupt can be generated for both direction change events if enabled through the DOWNIE bit.

To activate the Encoder mode the ENC bit has to be set to ‘1’. The LPTIM must first be configured in Continuous mode.

When Encoder mode is active, the LPTIM counter is modified automatically following the speed and the direction of the incremental encoder. Therefore, its content always represents the encoder’s position. The count direction, signaled by the Up and Down flags, correspond to the rotation direction of the encoder rotor.

According to the edge sensitivity configured using the CKPOL[1:0] bits, different counting scenarios are possible. The following table summarizes the possible combinations, assuming that Input1 and Input2 do not switch at the same time.

Table 147. Encoder counting scenarios

Active edge	Level on opposite signal (Input1 for Input2, Input2 for Input1)	Input1 signal		Input2 signal	
		Rising	Falling	Rising	Falling
Rising Edge	High	Down	No count	Up	No count
	Low	Up	No count	Down	No count
Falling Edge	High	No count	Up	No count	Down
	Low	No count	Down	No count	Up
Both Edges	High	Down	Up	Up	Down
	Low	Up	Down	Down	Up

The following figure shows a counting sequence for Encoder mode where both-edge sensitivity is configured.

Caution: In this mode the LPTIM must be clocked by an internal clock source, so the CKSEL bit must be maintained to its reset value which is equal to ‘0’. Also, the prescaler division ratio must be equal to its reset value which is 1 (PRESC[2:0] bits must be ‘000’).

Figure 211. Encoder mode counting sequence

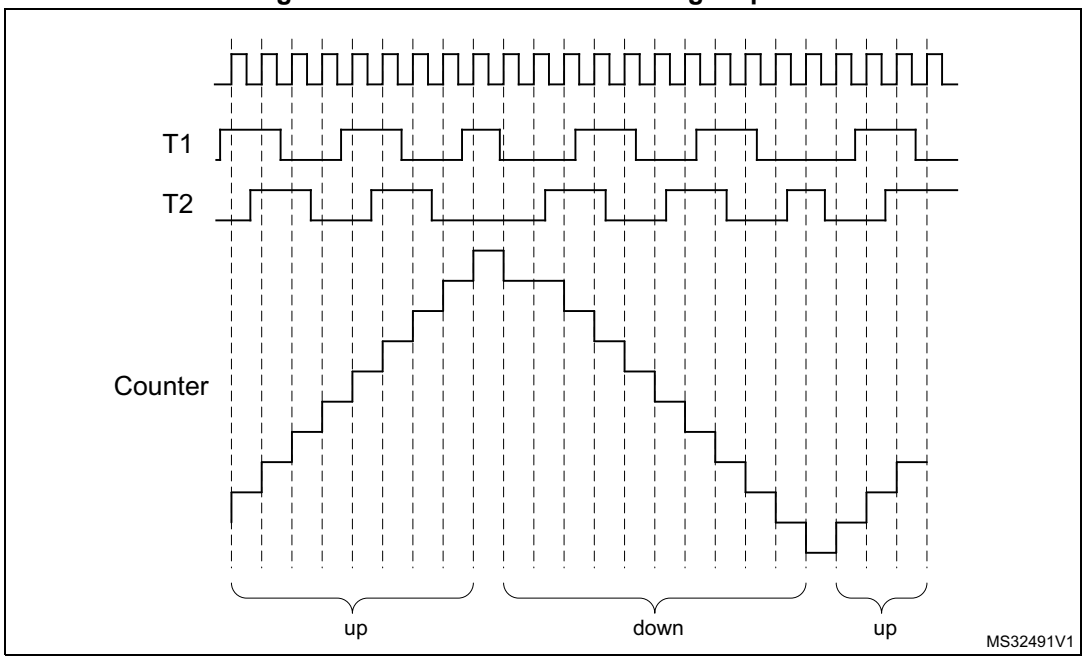

23.4.15 Debug mode

When the microcontroller enters debug mode (core halted), the LPTIM counter either continues to work normally or stops, depending on the DBG_LPTIM_STOP configuration bit in the DBG module.

23.5 LPTIM low-power modes

Table 148. Effect of low-power modes on the LPTIM

Mode	Description
Sleep	No effect. LPTIM interrupts cause the device to exit Sleep mode.
Stop	If the LPTIM is clocked by an oscillator available in Stop mode, LPTIM is functional and the interrupts cause the device to exit the Stop mode (refer to *Section 23.3: LPTIM implementation*).
Standby	The LPTIM peripheral is powered down and must be reinitialized after exiting Standby mode.

23.6 LPTIM interrupts

The following events generate an interrupt/wake-up event, if they are enabled through the LPTIM_IER register:

- Compare match
- Auto-reload match (whatever the direction if encoder mode)
- External trigger event
- Autoreload register write completed
- Compare register write completed
- Direction change (encoder mode), programmable (up / down / both).

Note: If any bit in the LPTIM_IER register (Interrupt Enable Register) is set after that its corresponding flag in the LPTIM_ISR register (Status Register) is set, the interrupt is not asserted.

Table 149. Interrupt events

Interrupt event	Description
Compare match	Interrupt flag is raised when the content of the Counter register (LPTIM_CNT) matches the content of the compare register (LPTIM_CMP).
Auto-reload match	Interrupt flag is raised when the content of the Counter register (LPTIM_CNT) matches the content of the Auto-reload register (LPTIM_ARR).
External trigger event	Interrupt flag is raised when an external trigger event is detected
Auto-reload register update OK	Interrupt flag is raised when the write operation to the LPTIM_ARR register is complete.
Compare register update OK	Interrupt flag is raised when the write operation to the LPTIM_CMP register is complete.
Direction change	Used in Encoder mode. Two interrupt flags are embedded to signal direction change: – UP flag signals up-counting direction change – DOWN flag signals down-counting direction change.

23.7 LPTIM registers

Refer to *Section 1.2: List of abbreviations for registers* for a list of abbreviations used in register descriptions.

The peripheral registers can only be accessed by words (32-bit).

23.7.1 LPTIM interrupt and status register (LPTIM_ISR)

Address offset: 0x000

Reset value: 0x0000 0000

31	30	29	28	27	26	25	24	23	22	21	20	19	18	17	16
Res.	Res.	Res.	Res.	Res.	Res.	Res.	Res.	Res.	Res.	Res.	Res.	Res.	Res.	Res.	Res.

15	14	13	12	11	10	9	8	7	6	5	4	3	2	1	0
Res.	Res.	Res.	Res.	Res.	Res.	Res.	Res.	Res.	DOWN	UP	ARR OK	CMP OK	EXT TRIG	ARRM	CMPM
									r	r	r	r	r	r	r

Bits 31:7 Reserved, must be kept at reset value.

Bit 6 **DOWN**: Counter direction change up to down

In Encoder mode, DOWN bit is set by hardware to inform application that the counter direction has changed from up to down. DOWN flag can be cleared by writing 1 to the DOWNCF bit in the LPTIM_ICR register.

Note: If the LPTIM does not support encoder mode feature, this bit is reserved. Please refer to Section 23.3: LPTIM implementation.

Bit 5 **UP**: Counter direction change down to up

In Encoder mode, UP bit is set by hardware to inform application that the counter direction has changed from down to up. UP flag can be cleared by writing 1 to the UPCF bit in the LPTIM_ICR register.

Note: If the LPTIM does not support encoder mode feature, this bit is reserved. Please refer to Section 23.3: LPTIM implementation.

Bit 4 **ARROK**: Autoreload register update OK

ARROK is set by hardware to inform application that the APB bus write operation to the LPTIM_ARR register has been successfully completed. ARROK flag can be cleared by writing 1 to the ARROKCF bit in the LPTIM_ICR register.

Bit 3 **CMPOK**: Compare register update OK

CMPOK is set by hardware to inform application that the APB bus write operation to the LPTIM_CMP register has been successfully completed. CMPOK flag can be cleared by writing 1 to the CMPOKCF bit in the LPTIM_ICR register.

Bit 2 **EXTTRIG**: External trigger edge event

EXTTRIG is set by hardware to inform application that a valid edge on the selected external trigger input has occurred. If the trigger is ignored because the timer has already started, then this flag is not set. EXTTRIG flag can be cleared by writing 1 to the EXTTRIGCF bit in the LPTIM_ICR register.

Bit 1 **ARRM**: Autoreload match

ARRM is set by hardware to inform application that LPTIM_CNT register's value reached the LPTIM_ARR register's value. ARRM flag can be cleared by writing 1 to the ARRMCF bit in the LPTIM_ICR register.

Bit 0 **CMPM**: Compare match

The CMPM bit is set by hardware to inform application that LPTIM_CNT register value reached the LPTIM_CMP register's value. CMPM flag can be cleared by writing 1 to the CMPMCF bit in the LPTIM_ICR register.

23.7.2 LPTIM interrupt clear register (LPTIM_ICR)

Address offset: 0x004

Reset value: 0x0000 0000

31	30	29	28	27	26	25	24	23	22	21	20	19	18	17	16
Res.	Res.	Res.	Res.	Res.	Res.	Res.	Res.	Res.	Res.	Res.	Res.	Res.	Res.	Res.	Res.

15	14	13	12	11	10	9	8	7	6	5	4	3	2	1	0
Res.	Res.	Res.	Res.	Res.	Res.	Res.	Res.	Res.	DOWNCF	UPCF	ARROKCF	CMPOKCF	EXTTRIGCF	ARRMCF	CMPMCF
									w	w	w	w	w	w	w

Bits 31:7 Reserved, must be kept at reset value.

Bit 6 **DOWNCF**: Direction change to down clear flag

Writing 1 to this bit clear the DOWN flag in the LPTIM_ISR register.

Note: If the LPTIM does not support encoder mode feature, this bit is reserved. Please refer to Section 23.3: LPTIM implementation.

Bit 5 **UPCF**: Direction change to UP clear flag

Writing 1 to this bit clear the UP flag in the LPTIM_ISR register.

Note: If the LPTIM does not support encoder mode feature, this bit is reserved. Please refer to Section 23.3: LPTIM implementation.

Bit 4 **ARROKCF**: Autoreload register update OK clear flag

Writing 1 to this bit clears the ARROK flag in the LPTIM_ISR register

Bit 3 **CMPOKCF**: Compare register update OK clear flag

Writing 1 to this bit clears the CMPOK flag in the LPTIM_ISR register

Bit 2 **EXTTRIGCF**: External trigger valid edge clear flag

Writing 1 to this bit clears the EXTTRIG flag in the LPTIM_ISR register

Bit 1 **ARRMCF**: Autoreload match clear flag

Writing 1 to this bit clears the ARRM flag in the LPTIM_ISR register

Bit 0 **CMPMCF**: Compare match clear flag

Writing 1 to this bit clears the CMPM flag in the LPTIM_ISR register

23.7.3 LPTIM interrupt enable register (LPTIM_IER)

Address offset: 0x008

Reset value: 0x0000 0000

31	30	29	28	27	26	25	24	23	22	21	20	19	18	17	16
Res.	Res.	Res.	Res.	Res.	Res.	Res.	Res.	Res.	Res.	Res.	Res.	Res.	Res.	Res.	Res.

15	14	13	12	11	10	9	8	7	6	5	4	3	2	1	0
Res.	Res.	Res.	Res.	Res.	Res.	Res.	Res.	Res.	DOWNIE	UPIE	ARROKIE	CMPOKIE	EXTTRIGIE	ARRMIE	CMPMIE
									rw	rw	rw	rw	rw	rw	rw

Bits 31:7 Reserved, must be kept at reset value.

Bit 6 **DOWNIE**: Direction change to down Interrupt Enable
- 0: DOWN interrupt disabled
- 1: DOWN interrupt enabled

Note: If the LPTIM does not support encoder mode feature, this bit is reserved. Please refer to Section 23.3: LPTIM implementation.

Bit 5 **UPIE**: Direction change to UP Interrupt Enable
- 0: UP interrupt disabled
- 1: UP interrupt enabled

Note: If the LPTIM does not support encoder mode feature, this bit is reserved. Please refer to Section 23.3: LPTIM implementation.

Bit 4 **ARROKIE**: Autoreload register update OK Interrupt Enable
- 0: ARROK interrupt disabled
- 1: ARROK interrupt enabled

Bit 3 **CMPOKIE**: Compare register update OK Interrupt Enable
- 0: CMPOK interrupt disabled
- 1: CMPOK interrupt enabled

Bit 2 **EXTTRIGIE**: External trigger valid edge Interrupt Enable
- 0: EXTTRIG interrupt disabled
- 1: EXTTRIG interrupt enabled

Bit 1 **ARRMIE**: Autoreload match Interrupt Enable
- 0: ARRM interrupt disabled
- 1: ARRM interrupt enabled

Bit 0 **CMPMIE**: Compare match Interrupt Enable
- 0: CMPM interrupt disabled
- 1: CMPM interrupt enabled

Caution: The LPTIM_IER register must only be modified when the LPTIM is disabled (ENABLE bit reset to ‘0’)

23.7.4 LPTIM configuration register (LPTIM_CFGR)

Address offset: 0x00C

Reset value: 0x0000 0000

31	30	29	28	27	26	25	24	23	22	21	20	19	18	17	16
Res.	Res.	Res.	Res.	Res.	Res.	Res.	ENC	COUNT MODE	PRELOAD	WAVPOL	WAVE	TIMOUT	TRIGEN[1:0]		Res.
							rw	rw	rw	rw	rw	rw	rw	rw	

15	14	13	12	11	10	9	8	7	6	5	4	3	2	1	0
TRIGSEL[2:0]			Res.	PRESC[2:0]			Res.	TRGFLT[1:0]		Res.	CKFLT[1:0]		CKPOL[1:0]		CKSEL
rw	rw	rw		rw	rw	rw		rw	rw		rw	rw	rw	rw	rw

Bits 31:30 Reserved, must be kept at reset value.

Bit 29 Reserved, must be kept at reset value.

Bits 28:25 Reserved, must be kept at reset value.

Bit 24 **ENC**: Encoder mode enable

The ENC bit controls the Encoder mode

0: Encoder mode disabled

1: Encoder mode enabled

Note: If the LPTIM does not support encoder mode feature, this bit is reserved. Please refer to Section 23.3: LPTIM implementation.

Bit 23 **COUNTMODE**: counter mode enabled

The COUNTMODE bit selects which clock source is used by the LPTIM to clock the counter:

0: the counter is incremented following each internal clock pulse

1: the counter is incremented following each valid clock pulse on the LPTIM external Input1

Bit 22 **PRELOAD**: Registers update mode

The PRELOAD bit controls the LPTIM_ARR and the LPTIM_CMP registers update modality

0: Registers are updated after each APB bus write access

1: Registers are updated at the end of the current LPTIM period

Bit 21 **WAVPOL**: Waveform shape polarity

The WAVEPOL bit controls the output polarity

0: The LPTIM output reflects the compare results between LPTIM_CNT and LPTIM_CMP registers

1: The LPTIM output reflects the inverse of the compare results between LPTIM_CNT and LPTIM_CMP registers

Bit 20 **WAVE**: Waveform shape

The WAVE bit controls the output shape

0: Deactivate Set-once mode

1: Activate the Set-once mode

Bit 19 **TIMOUT**: Timeout enable

The TIMOUT bit controls the Timeout feature

0: A trigger event arriving when the timer is already started will be ignored

1: A trigger event arriving when the timer is already started will reset and restart the counter

Bits 18:17 **TRIGEN[1:0]**: Trigger enable and polarity

The TRIGEN bits controls whether the LPTIM counter is started by an external trigger or not. If the external trigger option is selected, three configurations are possible for the trigger active edge:

00: software trigger (counting start is initiated by software)

01: rising edge is the active edge

10: falling edge is the active edge

11: both edges are active edges

Bit 16 Reserved, must be kept at reset value.

Bits 15:13 **TRIGSEL[2:0]**: Trigger selector

The TRIGSEL bits select the trigger source that will serve as a trigger event for the LPTIM among the below 8 available sources:

000: lptim_ext_trig0
001: lptim_ext_trig1
010: lptim_ext_trig2
011: lptim_ext_trig3
100: lptim_ext_trig4
101: lptim_ext_trig5
110: lptim_ext_trig6
111: lptim_ext_trig7

See *Section 23.4.2: LPTIM trigger mapping* for details.

Bit 12 Reserved, must be kept at reset value.

Bits 11:9 **PRESC[2:0]:** Clock prescaler

The PRESC bits configure the prescaler division factor. It can be one among the following division factors:

000: /1
001: /2
010: /4
011: /8
100: /16
101: /32
110: /64
111: /128

Bit 8 Reserved, must be kept at reset value.

Bits 7:6 **TRGFLT[1:0]:** Configurable digital filter for trigger

The TRGFLT value sets the number of consecutive equal samples that should be detected when a level change occurs on an internal trigger before it is considered as a valid level transition. An internal clock source must be present to use this feature

00: any trigger active level change is considered as a valid trigger
01: trigger active level change must be stable for at least 2 clock periods before it is considered as valid trigger.
10: trigger active level change must be stable for at least 4 clock periods before it is considered as valid trigger.
11: trigger active level change must be stable for at least 8 clock periods before it is considered as valid trigger.

Bit 5 Reserved, must be kept at reset value.

Bits 4:3 **CKFLT[1:0]:** Configurable digital filter for external clock

The CKFLT value sets the number of consecutive equal samples that should be detected when a level change occurs on an external clock signal before it is considered as a valid level transition. An internal clock source must be present to use this feature

00: any external clock signal level change is considered as a valid transition

01: external clock signal level change must be stable for at least 2 clock periods before it is considered as valid transition.

10: external clock signal level change must be stable for at least 4 clock periods before it is considered as valid transition.

11: external clock signal level change must be stable for at least 8 clock periods before it is considered as valid transition.

Bits 2:1 **CKPOL[1:0]:** Clock polarity

If LPTIM is clocked by an external clock source:

When the LPTIM is clocked by an external clock source, CKPOL bits is used to configure the active edge or edges used by the counter:

00:the rising edge is the active edge used for counting.
If the LPTIM is configured in Encoder mode (ENC bit is set), the encoder sub-mode 1 is active.

01:the falling edge is the active edge used for counting
If the LPTIM is configured in Encoder mode (ENC bit is set), the encoder sub-mode 2 is active.

10:both edges are active edges. When both external clock signal edges are considered active ones, the LPTIM must also be clocked by an internal clock source with a frequency equal to at least four times the external clock frequency.
If the LPTIM is configured in Encoder mode (ENC bit is set), the encoder sub-mode 3 is active.

11:not allowed

Refer to *Section 23.4.14: Encoder mode* for more details about Encoder mode sub-modes.

Bit 0 **CKSEL:** Clock selector

The CKSEL bit selects which clock source the LPTIM will use:

0: LPTIM is clocked by internal clock source (APB clock or any of the embedded oscillators)

1: LPTIM is clocked by an external clock source through the LPTIM external Input1

Caution: The LPTIM_CFGR register must only be modified when the LPTIM is disabled (ENABLE bit reset to ‘0’).

23.7.5 LPTIM control register (LPTIM_CR)

Address offset: 0x010

Reset value: 0x0000 0000

31	30	29	28	27	26	25	24	23	22	21	20	19	18	17	16
Res.	Res.	Res.	Res.	Res.	Res.	Res.	Res.	Res.	Res.	Res.	Res.	Res.	Res.	Res.	Res.

15	14	13	12	11	10	9	8	7	6	5	4	3	2	1	0
Res.	Res.	Res.	Res.	Res.	Res.	Res.	Res.	Res.	Res.	Res.	RST ARE	COUN TRST	CNT STRT	SNG STRT	ENA BLE
											rw	rs	rw	rw	rw

Bits 31:5 Reserved, must be kept at reset value.

Bit 4 **RSTARE:** Reset after read enable

This bit is set and cleared by software. When RSTARE is set to '1', any read access to LPTIM_CNT register will asynchronously reset LPTIM_CNT register content.

This bit can be set only when the LPTIM is enabled.

Bit 3 **COUNTRST:** Counter reset

This bit is set by software and cleared by hardware. When set to '1' this bit will trigger a synchronous reset of the LPTIM_CNT counter register. Due to the synchronous nature of this reset, it only takes place after a synchronization delay of 3 LPTimer core clock cycles (LPTimer core clock may be different from APB clock).

This bit can be set only when the LPTIM is enabled. It is automatically reset by hardware.

Caution: COUNTRST must never be set to '1' by software before it is already cleared to '0' by hardware. Software should consequently check that COUNTRST bit is already cleared to '0' before attempting to set it to '1'.

Bit 2 **CNTSTRT:** Timer start in Continuous mode

This bit is set by software and cleared by hardware.

In case of software start (TRIGEN[1:0] = ‘00’), setting this bit starts the LPTIM in Continuous mode.

If the software start is disabled (TRIGEN[1:0] different than ‘00’), setting this bit starts the timer in Continuous mode as soon as an external trigger is detected.

If this bit is set when a single pulse mode counting is ongoing, then the timer will not stop at the next match between the LPTIM_ARR and LPTIM_CNT registers and the LPTIM counter keeps counting in Continuous mode.

This bit can be set only when the LPTIM is enabled. It will be automatically reset by hardware.

Bit 1 **SNGSTRT:** LPTIM start in Single mode

This bit is set by software and cleared by hardware.

In case of software start (TRIGEN[1:0] = ‘00’), setting this bit starts the LPTIM in single pulse mode.

If the software start is disabled (TRIGEN[1:0] different than ‘00’), setting this bit starts the LPTIM in single pulse mode as soon as an external trigger is detected.

If this bit is set when the LPTIM is in continuous counting mode, then the LPTIM will stop at the following match between LPTIM_ARR and LPTIM_CNT registers.

This bit can only be set when the LPTIM is enabled. It will be automatically reset by hardware.

Bit 0 **ENABLE:** LPTIM enable

The ENABLE bit is set and cleared by software.

0:LPTIM is disabled

1:LPTIM is enabled

23.7.6 LPTIM compare register (LPTIM_CMP)

Address offset: 0x014

Reset value: 0x0000 0000

31	30	29	28	27	26	25	24	23	22	21	20	19	18	17	16
Res.	Res.	Res.	Res.	Res.	Res.	Res.	Res.	Res.	Res.	Res.	Res.	Res.	Res.	Res.	Res.

15	14	13	12	11	10	9	8	7	6	5	4	3	2	1	0
CMP[15:0]															
rw	rw	rw	rw	rw	rw	rw	rw	rw	rw	rw	rw	rw	rw	rw	rw

Bits 31:16 Reserved, must be kept at reset value.

Bits 15:0 **CMP[15:0]:** Compare value
CMP is the compare value used by the LPTIM.

Caution: The LPTIM_CMP register must only be modified when the LPTIM is enabled (ENABLE bit set to ‘1’).

23.7.7 LPTIM autoreload register (LPTIM_ARR)

Address offset: 0x018

Reset value: 0x0000 0001

31	30	29	28	27	26	25	24	23	22	21	20	19	18	17	16
Res.	Res.	Res.	Res.	Res.	Res.	Res.	Res.	Res.	Res.	Res.	Res.	Res.	Res.	Res.	Res.

15	14	13	12	11	10	9	8	7	6	5	4	3	2	1	0
ARR[15:0]															
rw	rw	rw	rw	rw	rw	rw	rw	rw	rw	rw	rw	rw	rw	rw	rw

Bits 31:16 Reserved, must be kept at reset value.

Bits 15:0 **ARR[15:0]:** Auto reload value
ARR is the autoreload value for the LPTIM.
This value must be strictly greater than the CMP[15:0] value.

Caution: The LPTIM_ARR register must only be modified when the LPTIM is enabled (ENABLE bit set to ‘1’).

23.7.8 LPTIM counter register (LPTIM_CNT)

Address offset: 0x01C

Reset value: 0x0000 0000

31	30	29	28	27	26	25	24	23	22	21	20	19	18	17	16
Res.	Res.	Res.	Res.	Res.	Res.	Res.	Res.	Res.	Res.	Res.	Res.	Res.	Res.	Res.	Res.

15	14	13	12	11	10	9	8	7	6	5	4	3	2	1	0
CNT[15:0]															
r	r	r	r	r	r	r	r	r	r	r	r	r	r	r	r

Bits 31:16 Reserved, must be kept at reset value.

Bits 15:0 **CNT[15:0]:** Counter value

When the LPTIM is running with an asynchronous clock, reading the LPTIM_CNT register may return unreliable values. So in this case it is necessary to perform two consecutive read accesses and verify that the two returned values are identical.

It should be noted that for a reliable LPTIM_CNT register read access, two consecutive read accesses must be performed and compared. A read access can be considered reliable when the values of the two consecutive read accesses are equal.

23.7.9 LPTIM1 option register (LPTIM1_OR)

Address offset: 0x020

Reset value: 0x0000 0000

31	30	29	28	27	26	25	24	23	22	21	20	19	18	17	16
Res.	Res.	Res.	Res.	Res.	Res.	Res.	Res.	Res.	Res.	Res.	Res.	Res.	Res.	Res.	Res.

15	14	13	12	11	10	9	8	7	6	5	4	3	2	1	0
Res.	Res.	Res.	Res.	Res.	Res.	Res.	Res.	Res.	Res.	Res.	Res.	Res.	Res.	Res.	OR_0
															rw

Bits 31:1 Reserved, must be kept at reset value.

Bit 0 **OR_0**: Option register bit 0

0: LPTIM1 input 1 is connected to I/O

1: LPTIM1 input 1 is connected to COMP1_OUT

23.7.10 LPTIM2 option register (LPTIM2_OR)

Address offset: 0x020

Reset value: 0x0000 0000

31	30	29	28	27	26	25	24	23	22	21	20	19	18	17	16
Res.	Res.	Res.	Res.	Res.	Res.	Res.	Res.	Res.	Res.	Res.	Res.	Res.	Res.	Res.	Res.

15	14	13	12	11	10	9	8	7	6	5	4	3	2	1	0
Res.	Res.	Res.	Res.	Res.	Res.	Res.	Res.	Res.	Res.	Res.	Res.	Res.	Res.	Res.	OR_0
															rw

Bits 31:1 Reserved, must be kept at reset value.

Bit 0 **OR_0**: Option register bit 0

0: LPTIM2 input 1 is connected to I/O

1: LPTIM2 input 1 is connected to COMP1_OUT

23.7.11 LPTIM register map

The following table summarizes the LPTIM registers.

Table 150. LPTIM register map and reset values

Offset	Register name	31	30	29	28	27	26	25	24	23	22	21	20	19	18	17	16	15	14	13	12	11	10	9	8	7	6	5	4	3	2	1	0
0x000	LPTIM_ISR	Res.	Res.	Res.	Res.	Res.	Res.	Res.	Res.	Res.	Res.	Res.	Res.	Res.	Res.	Res.	Res.	Res.	Res.	Res.	Res.	Res.	Res.	Res.	Res.	Res.	DOWN(1)	UP(1)	ARROK	CMPOK	EXTTRIG	ARRM	CMPM
	Reset value																										0	0	0	0	0	0	0
0x004	LPTIM_ICR	Res.	Res.	Res.	Res.	Res.	Res.	Res.	Res.	Res.	Res.	Res.	Res.	Res.	Res.	Res.	Res.	Res.	Res.	Res.	Res.	Res.	Res.	Res.	Res.	Res.	DOWNCF(1)	UPCF(1)	ARROKCF	CMPOKCF	EXTTRIGCF	ARRMCF	CMPMCF
	Reset value																										0	0	0	0	0	0	0
0x008	LPTIM_IER	Res.	Res.	Res.	Res.	Res.	Res.	Res.	Res.	Res.	Res.	Res.	Res.	Res.	Res.	Res.	Res.	Res.	Res.	Res.	Res.	Res.	Res.	Res.	Res.	Res.	DOWNIE(1)	UPIE(1)	ARROKIE	CMPOKIE	EXTTRIGIE	ARRMIE	CMPMIE
	Reset value																										0	0	0	0	0	0	0
0x00C	LPTIM_CFGR	Res.	Res.	Res.	Res.	Res.	Res.	Res.	ENC(1)	COUNTMODE	PRELOAD	WAVEPOL	WAVE	TIMOUT	TRIGEN		Res.	TRIGSEL[2:0]			Res.	PRESC			Res.	TRGFLT		Res.	CKFLT		CKPOL		CKSEL
	Reset value								0	0	0	0	0	0	0	0		0	0	0		0	0	0		0	0		0	0	0	0	0
0x010	LPTIM_CR	Res.	Res.	Res.	Res.	Res.	Res.	Res.	Res.	Res.	Res.	Res.	Res.	Res.	Res.	Res.	Res.	Res.	Res.	Res.	Res.	Res.	Res.	Res.	Res.	Res.	Res.	Res.	RSTARE	COUNTRST	CNTSTRT	SNGSTRT	ENABLE
	Reset value																												0	0	0	0	0
0x014	LPTIM_CMP	Res.	Res.	Res.	Res.	Res.	Res.	Res.	Res.	Res.	Res.	Res.	Res.	Res.	Res.	Res.	Res.	CMP[15:0]															
	Reset value																	0	0	0	0	0	0	0	0	0	0	0	0	0	0	0	0
0x018	LPTIM_ARR	Res.	Res.	Res.	Res.	Res.	Res.	Res.	Res.	Res.	Res.	Res.	Res.	Res.	Res.	Res.	Res.	ARR[15:0]															
	Reset value																	0	0	0	0	0	0	0	0	0	0	0	0	0	0	0	1
0x01C	LPTIM_CNT	Res.	Res.	Res.	Res.	Res.	Res.	Res.	Res.	Res.	Res.	Res.	Res.	Res.	Res.	Res.	Res.	CNT[15:0]															
	Reset value																	0	0	0	0	0	0	0	0	0	0	0	0	0	0	0	0
0x020	LPTIM1_OR	Res.	Res.	Res.	Res.	Res.	Res.	Res.	Res.	Res.	Res.	Res.	Res.	Res.	Res.	Res.	Res.	Res.	Res.	Res.	Res.	Res.	Res.	Res.	Res.	Res.	Res.	Res.	Res.	Res.	Res.	Res.	OR_0
	Reset value																																0
0x020	LPTIM2_OR	Res.	Res.	Res.	Res.	Res.	Res.	Res.	Res.	Res.	Res.	Res.	Res.	Res.	Res.	Res.	Res.	Res.	Res.	Res.	Res.	Res.	Res.	Res.	Res.	Res.	Res.	Res.	Res.	Res.	Res.	Res.	OR_0
	Reset value																																0

1. If LPTIM does not support encoder mode feature, this bit is reserved. Please refer to *Section 23.3: LPTIM implementation*.

Refer to *Section 2.2 on page 55* for the register boundary addresses.

24 Real-time clock (RTC)

24.1 Introduction

The RTC provides an automatic wake-up to manage all low-power modes.

The real-time clock (RTC) is an independent BCD timer/counter. The RTC provides a time-of-day clock/calendar with programmable alarm interrupts.

The RTC includes also a periodic programmable wake-up flag with interrupt capability.

Two 32-bit registers contain the seconds, minutes, hours (12- or 24-hour format), day (day of week), date (day of month), month, and year, expressed in binary coded decimal format (BCD). The sub-seconds value is also available in binary format.

Compensations for 28-, 29- (leap year), 30-, and 31-day months are performed automatically. Daylight saving time compensation can also be performed.

Additional 32-bit registers contain the programmable alarm subseconds, seconds, minutes, hours, day, and date.

A digital calibration feature is available to compensate for any deviation in crystal oscillator accuracy.

After Backup domain reset, all RTC registers are protected against possible parasitic write accesses.

As long as the supply voltage remains in the operating range, the RTC never stops, regardless of the device status (Run mode, low-power mode or under reset).

24.2 RTC main features

The RTC unit main features are the following (see *Figure 212: RTC block diagram*):

- Calendar with subseconds, seconds, minutes, hours (12 or 24 format), day (day of week), date (day of month), month, and year.
- Daylight saving compensation programmable by software.
- Programmable alarm with interrupt function. The alarm can be triggered by any combination of the calendar fields.
- Automatic wake-up unit generating a periodic flag that triggers an automatic wake-up interrupt.
- Reference clock detection: a more precise second source clock (50 or 60 Hz) can be used to enhance the calendar precision.
- Accurate synchronization with an external clock using the subsecond shift feature.
- Digital calibration circuit (periodic counter correction): 0.95 ppm accuracy, obtained in a calibration window of several seconds
- Time-stamp function for event saving
- Tamper detection event with configurable filter and internal pull-up
- Maskable interrupts/events:
  - Alarm A
  - Alarm B
  - Wake-up interrupt
  - Time-stamp
  - Tamper detection
- 20 backup registers.

24.3 RTC functional description

24.3.1 RTC block diagram

Figure 212. RTC block diagram

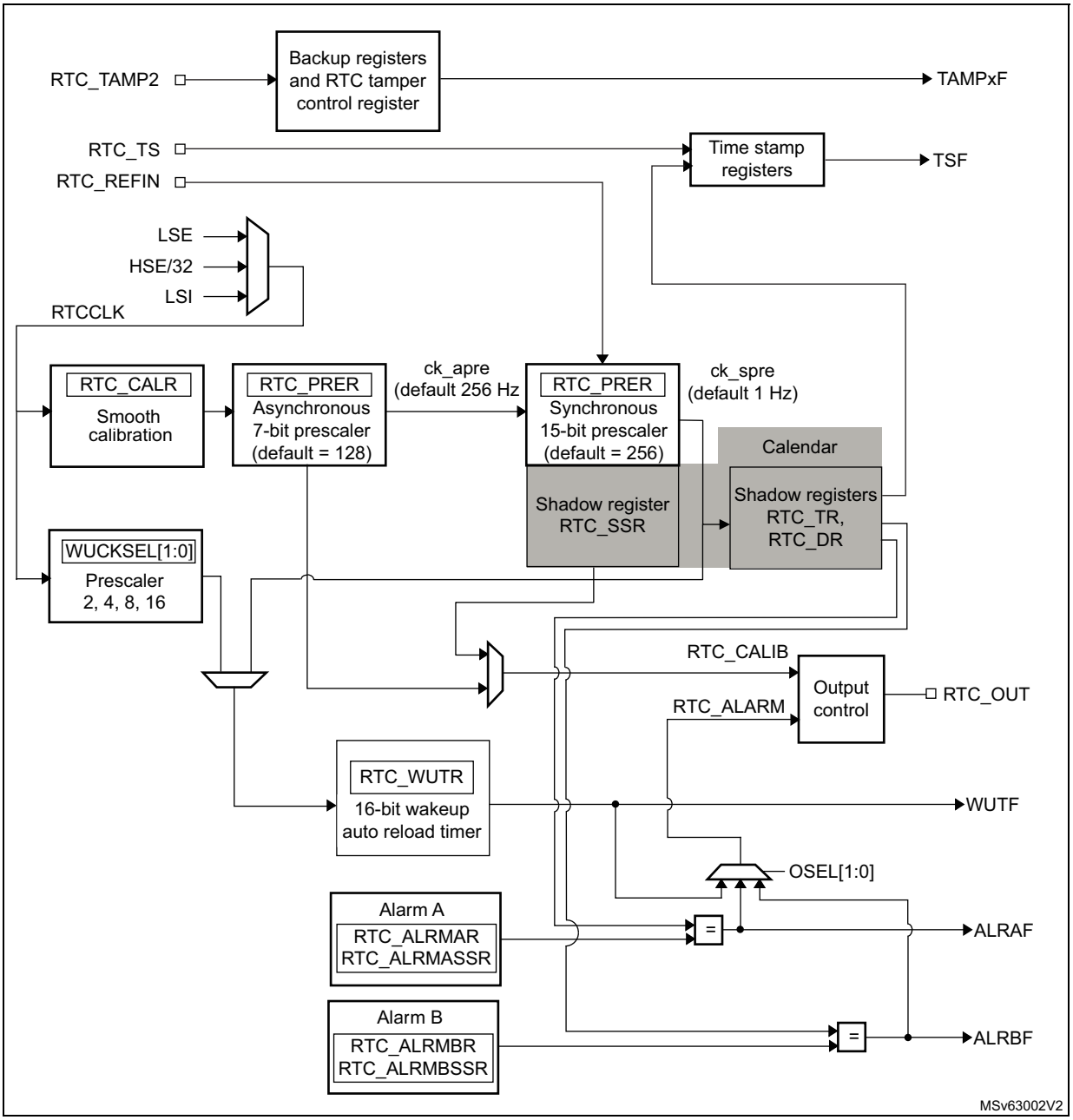

The RTC includes:

- Tamper detection erases the backup registers.
- One timestamp event from I/O
- Tamper event detection can generate a timestamp event
- Timestamp can be generated when a switch to V_{BAT} occurs

24.3.2 Clock and prescalers

The RTC clock source (RTCCLK) is selected through the clock controller among the LSE clock, the LSI oscillator clock, and the HSE clock. For more information on the RTC clock source configuration, refer to *Section 8: Reset and clock control (RCC)*.

A programmable prescaler stage generates a 1 Hz clock which is used to update the calendar. To minimize power consumption, the prescaler is split into 2 programmable prescalers (see *Figure 212: RTC block diagram*):

- A 7-bit asynchronous prescaler configured through the PREDIV_A bits of the RTC_PRER register.
- A 15-bit synchronous prescaler configured through the PREDIV_S bits of the RTC_PRER register.

Note: When both prescalers are used, it is recommended to configure the asynchronous prescaler to a high value to minimize consumption.

The asynchronous prescaler division factor is set to 128, and the synchronous division factor to 256, to obtain an internal clock frequency of 1 Hz (ck_spre) with an LSE frequency of 32.768 kHz.

The minimum division factor is 1 and the maximum division factor is 2^{22}.

This corresponds to a maximum input frequency of around 4 MHz.

f_{ck_apre} is given by the following formula:

$$f_{CK_APRE} = \frac{f_{RTCCLK}}{PREDIV_A + 1}$$

The ck_apre clock is used to clock the binary RTC_SSR subseconds downcounter. When it reaches 0, RTC_SSR is reloaded with the content of PREDIV_S.

f_{ck_spre} is given by the following formula:

$$f_{CK_SPRE} = \frac{f_{RTCCLK}}{(PREDIV_S + 1) \times (PREDIV_A + 1)}$$

The ck_spre clock can be used either to update the calendar or as timebase for the 16-bit wake-up auto-reload timer. To obtain short timeout periods, the 16-bit wake-up auto-reload timer can also run with the RTCCLK divided by the programmable 4-bit asynchronous prescaler (see *Section 24.3.5: Periodic auto-wake-up* for details).

24.3.3 Real-time clock and calendar

The RTC calendar time and date registers are accessed through shadow registers which are synchronized with PCLK (APB clock). They can also be accessed directly in order to avoid waiting for the synchronization duration.

- RTC_SSR for the subseconds
- RTC_TR for the time
- RTC_DR for the date

Every RTCCLK period, the current calendar value is copied into the shadow registers, and the RSF bit of RTC_ISR register is set (see *Section 24.6.4: RTC initialization and status*

register (RTC_ISR)). The copy is not performed in Stop and Standby mode. When exiting these modes, the shadow registers are updated after up to 1 RTCCLK period.

When the application reads the calendar registers, it accesses the content of the shadow registers. It is possible to make a direct access to the calendar registers by setting the BYPSHAD control bit in the RTC_CR register. By default, this bit is cleared, and the user accesses the shadow registers.

When reading the RTC_SSR, RTC_TR or RTC_DR registers in BYPSHAD=0 mode, the frequency of the APB clock (f_{APB}) must be at least 7 times the frequency of the RTC clock (f_{RTCCLK}).

The shadow registers are reset by system reset.

24.3.4 Programmable alarms

The RTC unit provides programmable alarm: Alarm A and Alarm B. The description below is given for Alarm A, but can be translated in the same way for Alarm B.

The programmable alarm function is enabled through the ALRAE bit in the RTC_CR register. The ALRAF is set to 1 if the calendar subseconds, seconds, minutes, hours, date or day match the values programmed in the alarm registers RTC_ALRMASSR and RTC_ALRMAR. Each calendar field can be independently selected through the MSKx bits of the RTC_ALRMAR register, and through the MASKSSx bits of the RTC_ALRMASSR register. The alarm interrupt is enabled through the ALRAIE bit in the RTC_CR register.

Caution: If the seconds field is selected (MSK1 bit reset in RTC_ALRMAR), the synchronous prescaler division factor set in the RTC_PRER register must be at least 3 to ensure correct behavior.

Alarm A and Alarm B (if enabled by bits OSEL[1:0] in RTC_CR register) can be routed to the RTC_ALARM output. RTC_ALARM output polarity can be configured through bit POL the RTC_CR register.

24.3.5 Periodic auto-wake-up

The periodic wake-up flag is generated by a 16-bit programmable auto-reload down-counter. The wake-up timer range can be extended to 17 bits.

The wake-up function is enabled through the WUTE bit in the RTC_CR register.

The wake-up timer clock input can be:

- RTC clock (RTCCLK) divided by 2, 4, 8, or 16.

  When RTCCLK is LSE(32.768 kHz), this allows to configure the wake-up interrupt period from 122 µs to 32 s, with a resolution down to 61 µs.
- ck_spre (usually 1 Hz internal clock)

  When ck_spre frequency is 1Hz, this allows to achieve a wake-up time from 1 s to around 36 hours with one-second resolution. This large programmable time range is divided in 2 parts:
  - from 1s to 18 hours when WUCKSEL [2:1] = 10
  - and from around 18h to 36h when WUCKSEL[2:1] = 11. In this last case 2^{16} is added to the 16-bit counter current value.When the initialization sequence is complete (see *Programming the wake-up timer on page 723*), the timer starts counting down.When the wake-up function is enabled, the down-counting remains active in low-power modes. In addition, when it reaches 0, the WUTF flag is set in

the RTC_ISR register, and the wake-up counter is automatically reloaded with its reload value (RTC_WUTR register value).

The WUTF flag must then be cleared by software.

When the periodic wake-up interrupt is enabled by setting the WUTIE bit in the RTC_CR register, it can exit the device from low-power modes.

The periodic wake-up flag can be routed to the RTC_ALARM output provided it has been enabled through bits OSEL[1:0] of RTC_CR register. RTC_ALARM output polarity can be configured through the POL bit in the RTC_CR register.

System reset, as well as low-power modes (Sleep, Stop and Standby) have no influence on the wake-up timer.

24.3.6 RTC initialization and configuration

RTC register access

The RTC registers are 32-bit registers. The APB interface introduces two wait states in RTC register accesses except on read accesses to calendar shadow registers when BYPSHAD = 0.

RTC register write protection

After system reset, the RTC registers are protected against parasitic write access by clearing the DBP bit in the PWR_CR register (refer to the power control section). DBP bit must be set in order to enable RTC registers write access.

After Backup domain reset, all the RTC registers are write-protected. Writing to the RTC registers is enabled by writing a key into the Write Protection register, RTC_WPR.

The following steps are required to unlock the write protection on all the RTC registers except for RTC_TAMPCR, RTC_BKPxR, RTC_OR and RTC_ISR[31:8].

1. Write ‘0xCA’ into the RTC_WPR register.
2. Write ‘0x53’ into the RTC_WPR register.

Writing a wrong key reactivates the write protection.

The protection mechanism is not affected by system reset.

Calendar initialization and configuration

To program the initial time and date calendar values, including the time format and the prescaler configuration, the following sequence is required:

1. Set INIT bit to 1 in the RTC_ISR register to enter initialization mode. In this mode, the calendar counter is stopped and its value can be updated.
2. Poll INITF bit of in the RTC_ISR register. The initialization phase mode is entered when INITF is set to 1. It takes around 2 RTCCLK clock cycles (due to clock synchronization).
3. To generate a 1 Hz clock for the calendar counter, program both the prescaler factors in RTC_PRER register.
4. Load the initial time and date values in the shadow registers (RTC_TR and RTC_DR), and configure the time format (12 or 24 hours) through the FMT bit in the RTC_CR register.
5. Exit the initialization mode by clearing the INIT bit. The actual calendar counter value is then automatically loaded and the counting restarts after 4 RTCCLK clock cycles.

When the initialization sequence is complete, the calendar starts counting.

Note: After a system reset, the application can read the INITS flag in the RTC_ISR register to check if the calendar has been initialized or not. If this flag equals 0, the calendar has not been initialized since the year field is set at its Backup domain reset default value (0x00).

To read the calendar after initialization, the software must first check that the RSF flag is set in the RTC_ISR register.

Daylight saving time

The daylight saving time management is performed through bits SUB1H, ADD1H, and BKP of the RTC_CR register.

Using SUB1H or ADD1H, the software can subtract or add one hour to the calendar in one single operation without going through the initialization procedure.

In addition, the software can use the BKP bit to memorize this operation.

Programming the alarm

A similar procedure must be followed to program or update the programmable alarms. The procedure below is given for Alarm A but can be translated in the same way for Alarm B.

1. Clear ALRAE in RTC_CR to disable Alarm A.
2. Program the Alarm A registers (RTC_ALRMASSR/RTC_ALRMAR).
3. Set ALRAE in the RTC_CR register to enable Alarm A again.

Note: Each change of the RTC_CR register is taken into account after around 2 RTCCLK clock cycles due to clock synchronization.

Programming the wake-up timer

The following sequence is required to configure or change the wake-up timer auto-reload value (WUT[15:0] in RTC_WUTR):

1. Clear WUTE in RTC_CR to disable the wake-up timer.
2. Poll WUTWF until it is set in RTC_ISR to make sure the access to wake-up auto-reload counter and to WUCKSEL[2:0] bits is allowed. It takes around 2 RTCCLK clock cycles (due to clock synchronization).
3. Program the wake-up auto-reload value WUT[15:0], and the wake-up clock selection (WUCKSEL[2:0] bits in RTC_CR). Set WUTE in RTC_CR to enable the timer again. The wake-up timer restarts down-counting. The WUTWF bit is cleared up to 2 RTCCLK clock cycles after WUTE is cleared, due to clock synchronization.

24.3.7 Reading the calendar

When BYPSHAD control bit is cleared in the RTC_CR register

To read the RTC calendar registers (RTC_SSR, RTC_TR and RTC_DR) properly, the APB clock frequency (f_{PCLK}) must be equal to or greater than seven times the RTC clock frequency (f_{RTCCLK}). This ensures a secure behavior of the synchronization mechanism.

If the APB clock frequency is less than seven times the RTC clock frequency, the software must read the calendar time and date registers twice. If the second read of the RTC_TR gives the same result as the first read, this ensures that the data is correct. Otherwise a third

read access must be done. In any case the APB clock frequency must never be lower than the RTC clock frequency.

The RSF bit is set in RTC_ISR register each time the calendar registers are copied into the RTC_SSR, RTC_TR and RTC_DR shadow registers. The copy is performed every RTCCLK cycle. To ensure consistency between the 3 values, reading either RTC_SSR or RTC_TR locks the values in the higher-order calendar shadow registers until RTC_DR is read. In case the software makes read accesses to the calendar in a time interval smaller than 1 RTCCLK period: RSF must be cleared by software after the first calendar read, and then the software must wait until RSF is set before reading again the RTC_SSR, RTC_TR and RTC_DR registers.

After waking up from low-power mode (Stop or Standby), RSF must be cleared by software. The software must then wait until it is set again before reading the RTC_SSR, RTC_TR and RTC_DR registers.

The RSF bit must be cleared after wake-up and not before entering low-power mode.

After a system reset, the software must wait until RSF is set before reading the RTC_SSR, RTC_TR and RTC_DR registers. Indeed, a system reset resets the shadow registers to their default values.

After an initialization (refer to *Calendar initialization and configuration on page 722*): the software must wait until RSF is set before reading the RTC_SSR, RTC_TR and RTC_DR registers.

After synchronization (refer to *Section 24.3.9: RTC synchronization*): the software must wait until RSF is set before reading the RTC_SSR, RTC_TR and RTC_DR registers.

When the BYPSHAD control bit is set in the RTC_CR register (bypass shadow registers)

Reading the calendar registers gives the values from the calendar counters directly, thus eliminating the need to wait for the RSF bit to be set. This is especially useful after exiting from low-power modes (STOP or Standby), since the shadow registers are not updated during these modes.

When the BYPSHAD bit is set to 1, the results of the different registers might not be coherent with each other if an RTCCLK edge occurs between two read accesses to the registers. Additionally, the value of one of the registers may be incorrect if an RTCCLK edge occurs during the read operation. The software must read all the registers twice, and then compare the results to confirm that the data is coherent and correct. Alternatively, the software can just compare the two results of the least-significant calendar register.

Note: While BYPSHAD=1, instructions which read the calendar registers require one extra APB cycle to complete.

24.3.8 Resetting the RTC

The calendar shadow registers (RTC_SSR, RTC_TR and RTC_DR) and some bits of the RTC status register (RTC_ISR) are reset to their default values by all available system reset sources.

On the contrary, the following registers are reset to their default values by a Backup domain reset and are not affected by a system reset: the RTC current calendar registers, the RTC control register (RTC_CR), the prescaler register (RTC_PRER), the RTC calibration register (RTC_CALR), the RTC shift register (RTC_SHIFTR), the RTC timestamp registers

(RTC_TSSSR, RTC_TSTR and RTC_TSDR), the RTC tamper configuration register (RTC_TAMPCR), the RTC backup registers (RTC_BKPxR), the wake-up timer register (RTC_WUTR), the Alarm A and Alarm B registers (RTC_ALRMASSR/RTC_ALRMAR and RTC_ALRMBSSR/RTC_ALRMBR), and the Option register (RTC_OR).

In addition, when it is clocked by the LSE, the RTC keeps on running under system reset if the reset source is different from the Backup domain reset one (refer to the RTC clock section of the Reset and clock controller for details on the list of RTC clock sources not affected by system reset). When a Backup domain reset occurs, the RTC is stopped and all the RTC registers are set to their reset values.

24.3.9 RTC synchronization

The RTC can be synchronized to a remote clock with a high degree of precision. After reading the sub-second field (RTC_SSR or RTC_TSSSR), a calculation can be made of the precise offset between the times being maintained by the remote clock and the RTC. The RTC can then be adjusted to eliminate this offset by “shifting” its clock by a fraction of a second using RTC_SHIFTR.

RTC_SSR contains the value of the synchronous prescaler counter. This allows one to calculate the exact time being maintained by the RTC down to a resolution of 1 / (PREDIV_S + 1) seconds. As a consequence, the resolution can be improved by increasing the synchronous prescaler value (PREDIV_S[14:0]. The maximum resolution allowed (30.52 µs with a 32768 Hz clock) is obtained with PREDIV_S set to 0x7FFF.

However, increasing PREDIV_S means that PREDIV_A must be decreased in order to maintain the synchronous prescaler output at 1 Hz. In this way, the frequency of the asynchronous prescaler output increases, which may increase the RTC dynamic consumption.

The RTC can be finely adjusted using the RTC shift control register (RTC_SHIFTR). Writing to RTC_SHIFTR can shift (either delay or advance) the clock by up to a second with a resolution of 1 / (PREDIV_S + 1) seconds. The shift operation consists of adding the SUBFS[14:0] value to the synchronous prescaler counter SS[15:0]: this will delay the clock. If at the same time the ADD1S bit is set, this results in adding one second and at the same time subtracting a fraction of second, so this will advance the clock.

Caution: Before initiating a shift operation, the user must check that SS[15] = 0 in order to ensure that no overflow will occur.

As soon as a shift operation is initiated by a write to the RTC_SHIFTR register, the SHPF flag is set by hardware to indicate that a shift operation is pending. This bit is cleared by hardware as soon as the shift operation has completed.

Caution: This synchronization feature is not compatible with the reference clock detection feature: firmware must not write to RTC_SHIFTR when REFCKON=1.

24.3.10 RTC reference clock detection

The update of the RTC calendar can be synchronized to a reference clock, RTC_REFIN, which is usually the mains frequency (50 or 60 Hz). The precision of the RTC_REFIN reference clock should be higher than the 32.768 kHz LSE clock. When the RTC_REFIN detection is enabled (REFCKON bit of RTC_CR set to 1), the calendar is still clocked by the LSE, and RTC_REFIN is used to compensate for the imprecision of the calendar update frequency (1 Hz).

Each 1 Hz clock edge is compared to the nearest RTC_REFIN clock edge (if one is found within a given time window). In most cases, the two clock edges are properly aligned. When the 1 Hz clock becomes misaligned due to the imprecision of the LSE clock, the RTC shifts the 1 Hz clock a bit so that future 1 Hz clock edges are aligned. Thanks to this mechanism, the calendar becomes as precise as the reference clock.

The RTC detects if the reference clock source is present by using the 256 Hz clock (ck_apre) generated from the 32.768 kHz quartz. The detection is performed during a time window around each of the calendar updates (every 1 s). The window equals 7 ck_apre periods when detecting the first reference clock edge. A smaller window of 3 ck_apre periods is used for subsequent calendar updates.

Each time the reference clock is detected in the window, the synchronous prescaler which outputs the ck_spre clock is forced to reload. This has no effect when the reference clock and the 1 Hz clock are aligned because the prescaler is being reloaded at the same moment. When the clocks are not aligned, the reload shifts future 1 Hz clock edges a little for them to be aligned with the reference clock.

If the reference clock halts (no reference clock edge occurred during the 3 ck_apre window), the calendar is updated continuously based solely on the LSE clock. The RTC then waits for the reference clock using a large 7 ck_apre period detection window centered on the ck_spre edge.

When the RTC_REFIN detection is enabled, PREDIV_A and PREDIV_S must be set to their default values:

- PREDIV_A = 0x007F
- PREVID_S = 0x00FF

Note: RTC_REFIN clock detection is not available in Standby mode.

24.3.11 RTC smooth digital calibration

The RTC frequency can be digitally calibrated with a resolution of about 0.954 ppm with a range from -487.1 ppm to +488.5 ppm. The correction of the frequency is performed using series of small adjustments (adding and/or subtracting individual RTCCLK pulses). These adjustments are fairly well distributed so that the RTC is well calibrated even when observed over short durations of time.

The smooth digital calibration is performed during a cycle of about 2^{20} RTCCLK pulses, or 32 seconds when the input frequency is 32768 Hz. This cycle is maintained by a 20-bit counter, cal_cnt[19:0], clocked by RTCCLK.

The smooth calibration register (RTC_CALR) specifies the number of RTCCLK clock cycles to be masked during the 32-second cycle:

- Setting the bit CALM[0] to 1 causes exactly one pulse to be masked during the 32-second cycle.
- Setting CALM[1] to 1 causes two additional cycles to be masked
- Setting CALM[2] to 1 causes four additional cycles to be masked
- and so on up to CALM[8] set to 1 which causes 256 clocks to be masked.

Note: CALM[8:0] (RTC_CALR) specifies the number of RTCCLK pulses to be masked during the 32-second cycle. Setting the bit CALM[0] to '1' causes exactly one pulse to be masked during the 32-second cycle at the moment when cal_cnt[19:0] is 0x80000; CALM[1]=1 causes two other cycles to be masked (when cal_cnt is 0x40000 and 0xC0000); CALM[2]=1

causes four other cycles to be masked (cal_cnt = 0x20000/0x60000/0xA0000/ 0xE0000); and so on up to CALM[8]=1 which causes 256 clocks to be masked (cal_cnt = 0xXX800).

While CALM allows the RTC frequency to be reduced by up to 487.1 ppm with fine resolution, the bit CALP can be used to increase the frequency by 488.5 ppm. Setting CALP to '1' effectively inserts an extra RTCCLK pulse every 2^{11} RTCCLK cycles, which means that 512 clocks are added during every 32-second cycle.

Using CALM together with CALP, an offset ranging from -511 to +512 RTCCLK cycles can be added during the 32-second cycle, which translates to a calibration range of -487.1 ppm to +488.5 ppm with a resolution of about 0.954 ppm.

The formula to calculate the effective calibrated frequency (F_{CAL}) given the input frequency (F_{RTCCLK}) is as follows:

$$F_{CAL} = F_{RTCCLK} \times [1 + (CALP \times 512 - CALM) / (2^{20} + CALM - CALP \times 512)]$$

Calibration when PREDIV_A<3

The CALP bit can not be set to 1 when the asynchronous prescaler value (PREDIV_A bits in RTC_PRER register) is less than 3. If CALP was already set to 1 and PREDIV_A bits are set to a value less than 3, CALP is ignored and the calibration operates as if CALP was equal to 0.

To perform a calibration with PREDIV_A less than 3, the synchronous prescaler value (PREDIV_S) should be reduced so that each second is accelerated by 8 RTCCLK clock cycles, which is equivalent to adding 256 clock cycles every 32 seconds. As a result, between 255 and 256 clock pulses (corresponding to a calibration range from 243.3 to 244.1 ppm) can effectively be added during each 32-second cycle using only the CALM bits.

With a nominal RTCCLK frequency of 32768 Hz, when PREDIV_A equals 1 (division factor of 2), PREDIV_S should be set to 16379 rather than 16383 (4 less). The only other interesting case is when PREDIV_A equals 0, PREDIV_S should be set to 32759 rather than 32767 (8 less).

If PREDIV_S is reduced in this way, the formula given the effective frequency of the

calibrated input clock is as follows:

$$F_{CAL} = F_{RTCCLK} \times [1 + (256 - CALM) / (2^{20} + CALM - 256)]$$

In this case, CALM[7:0] equals 0x100 (the midpoint of the CALM range) is the correct setting if RTCCLK is exactly 32768.00 Hz.

Verifying the RTC calibration

RTC precision is ensured by measuring the precise frequency of RTCCLK and calculating the correct CALM value and CALP values. An optional 1 Hz output is provided to allow applications to measure and verify the RTC precision.

Measuring the precise frequency of the RTC over a limited interval can result in a measurement error of up to 2 RTCCLK clock cycles over the measurement period, depending on how the digital calibration cycle is aligned with the measurement period.

However, this measurement error can be eliminated if the measurement period is the same length as the calibration cycle period. In this case, the only error observed is the error due to the resolution of the digital calibration.

- By default, the calibration cycle period is 32 seconds.

Using this mode and measuring the accuracy of the 1 Hz output over exactly 32 seconds guarantees that the measure is within 0.477 ppm (0.5 RTCCLK cycles over 32 seconds, due to the limitation of the calibration resolution).

- CALW16 bit of the RTC_CALR register can be set to 1 to force a 16- second calibration cycle period.

In this case, the RTC precision can be measured during 16 seconds with a maximum error of 0.954 ppm (0.5 RTCCLK cycles over 16 seconds). However, since the calibration resolution is reduced, the long term RTC precision is also reduced to 0.954 ppm: CALM[0] bit is stuck at 0 when CALW16 is set to 1.

- CALW8 bit of the RTC_CALR register can be set to 1 to force a 8- second calibration cycle period.

In this case, the RTC precision can be measured during 8 seconds with a maximum error of 1.907 ppm (0.5 RTCCLK cycles over 8s). The long term RTC precision is also reduced to 1.907 ppm: CALM[1:0] bits are stuck at 00 when CALW8 is set to 1.

Re-calibration on-the-fly

The calibration register (RTC_CALR) can be updated on-the-fly while RTC_ISR/INITF=0, by using the follow process:

1. Poll the RTC_ISR/RECALPF (re-calibration pending flag).
2. If it is set to 0, write a new value to RTC_CALR, if necessary. RECALPF is then automatically set to 1
3. Within three ck_apre cycles after the write operation to RTC_CALR, the new calibration settings take effect.

24.3.12 Time-stamp function

Time-stamp is enabled by setting the TSE or ITSE bits of RTC_CR register to 1.

When TSE is set:

The calendar is saved in the time-stamp registers (RTC_TSSSR, RTC_TSTR, RTC_TSDR) when a time-stamp event is detected on the RTC_TS pin.

When ITSE is set:

The calendar is saved in the time-stamp registers (RTC_TSSSR, RTC_TSTR, RTC_TSDR) when an internal time-stamp event is detected. The internal timestamp event is generated by the switch to the VBAT supply.

When a time-stamp event occurs, due to internal or external event, the time-stamp flag bit (TSF) in RTC_ISR register is set. In case the event is internal, the ITSF flag is also set in RTC_ISR register.

By setting the TSIE bit in the RTC_CR register, an interrupt is generated when a time-stamp event occurs.

If a new time-stamp event is detected while the time-stamp flag (TSF) is already set, the time-stamp overflow flag (TSOVF) flag is set and the time-stamp registers (RTC_TSTR and RTC_TSDR) maintain the results of the previous event.

Note: *TSF is set 2 ck_apre cycles after the time-stamp event occurs due to synchronization process.*

There is no delay in the setting of TSOVF. This means that if two time-stamp events are close together, TSOVF can be seen as '1' while TSF is still '0'. As a consequence, it is recommended to poll TSOVF only after TSF has been set.

Caution: If a time-stamp event occurs immediately after the TSF bit is supposed to be cleared, then both TSF and TSOVF bits are set.To avoid masking a time-stamp event occurring at the same moment, the application must not write ‘0’ into TSF bit unless it has already read it to ‘1’.

Optionally, a tamper event can cause a time-stamp to be recorded. See the description of the TAMPTS control bit in *Section 24.6.16: RTC tamper configuration register (RTC_TAMPCR)*.

24.3.13 Tamper detection

The RTC_TAMPx input events can be configured either for edge detection, or for level detection with filtering.

The tamper detection can be configured for the following purposes:

- erase the RTC backup registers (default configuration)
- generate an interrupt, capable to wake-up from Stop and Standby modes
- generate a hardware trigger for the low-power timers

RTC backup registers

The backup registers (RTC_BKPxR) are not reset by system reset or when the device wakes up from Standby mode.

The backup registers are reset when a tamper detection event occurs (see *Section 24.6.20: RTC backup registers (RTC_BKPxR)* and *Tamper detection initialization on page 729*) except if the TAMPxNOERASE bit is set, or if TAMPxMF is set in the RTC_TAMPCR register.

Tamper detection initialization

Each input can be enabled by setting the corresponding TAMPxE bits to 1 in the RTC_TAMPCR register.

Each RTC_TAMPx tamper detection input is associated with a flag TAMPxF in the RTC_ISR register.

When TAMPxMF is cleared:

The TAMPxF flag is asserted after the tamper event on the pin, with the latency provided below:

- 3 ck_apre cycles when TAMPFLT differs from 0x0 (Level detection with filtering)
- 3 ck_apre cycles when TAMPTS=1 (Timestamp on tamper event)
- No latency when TAMPFLT=0x0 (Edge detection) and TAMPTS=0

A new tamper occurring on the same pin during this period and as long as TAMPxF is set cannot be detected.

When TAMPxMF is set:

A new tamper occurring on the same pin cannot be detected during the latency described above and 2.5 ck_rtc additional cycles.

By setting the TAMPIE bit in the RTC_TAMPCR register, an interrupt is generated when a tamper detection event occurs (when TAMPxF is set). Setting TAMPIE is not allowed when one or more TAMPxMF is set.

When TAMPIE is cleared, each tamper pin event interrupt can be individually enabled by setting the corresponding TAMPxIE bit in the RTC_TAMPCR register. Setting TAMPxIE is not allowed when the corresponding TAMPxMF is set.

Trigger output generation on tamper event

The tamper event detection can be used as trigger input by the low-power timers.

When TAMPxMF bit in cleared in RTC_TAMPCR register, the TAMPxF flag must be cleared by software in order to allow a new tamper detection on the same pin.

When TAMPxMF bit is set, the TAMPxF flag is masked, and kept cleared in RTC_ISR register. This configuration allows to trig automatically the low-power timers in Stop mode, without requiring the system wakeup to perform the TAMPxF clearing. In this case, the backup registers are not cleared.

Timestamp on tamper event

With TAMPTS set to ‘1’, any tamper event causes a timestamp to occur. In this case, either the TSF bit or the TSOVF bit are set in RTC_ISR, in the same manner as if a normal timestamp event occurs. The affected tamper flag register TAMPxF is set at the same time that TSF or TSOVF is set.

Edge detection on tamper inputs

If the TAMPFLT bits are “00”, the RTC_TAMPx pins generate tamper detection events when either a rising edge or a falling edge is observed depending on the corresponding TAMPxTRG bit. The internal pull-up resistors on the RTC_TAMPx inputs are deactivated when edge detection is selected.

Caution: When using the edge detection, it is recommended to check by software the tamper pin level just after enabling the tamper detection (by reading the GPIO registers), and before writing sensitive values in the backup registers, to ensure that an active edge did not occur before enabling the tamper event detection.
When TAMPFLT="00" and TAMPxTRG = 0 (rising edge detection), a tamper event may be detected by hardware if the tamper input is already at high level before enabling the tamper detection.

After a tamper event has been detected and cleared, the RTC_TAMPx should be disabled and then re-enabled (TAMPxE set to 1) before re-programming the backup registers (RTC_BKPxR). This prevents the application from writing to the backup registers while the RTC_TAMPx input value still indicates a tamper detection. This is equivalent to a level detection on the RTC_TAMPx input.

Note: Tamper detection is still active when V_{DD} power is switched off. To avoid unwanted resetting of the backup registers, the pin to which the RTC_TAMPx is mapped should be externally tied to the correct level.

Level detection with filtering on RTC_TAMPx inputs

Level detection with filtering is performed by setting TAMPFLT to a non-zero value. A tamper detection event is generated when either 2, 4, or 8 (depending on TAMPFLT) consecutive samples are observed at the level designated by the TAMPxTRG bits.

The RTC_TAMPx inputs are precharged through the I/O internal pull-up resistance before its state is sampled, unless disabled by setting TAMPPUDIS to 1,The duration of the precharge is determined by the TAMPPRCH bits, allowing for larger capacitances on the RTC_TAMPx inputs.

The trade-off between tamper detection latency and power consumption through the pull-up can be optimized by using TAMPFREQ to determine the frequency of the sampling for level detection.

Note: Refer to the datasheets for the electrical characteristics of the pull-up resistors.

24.3.14 Calibration clock output

When the COE bit is set to 1 in the RTC_CR register, a reference clock is provided on the RTC_CALIB device output.

If the COSEL bit in the RTC_CR register is reset and PREDIV_A = 0x7F, the RTC_CALIB frequency is $f_{RTCCLK/64}$. This corresponds to a calibration output at 512 Hz for an RTCCLK frequency at 32.768 kHz. The RTC_CALIB duty cycle is irregular: there is a light jitter on falling edges. It is therefore recommended to use rising edges.

When COSEL is set and “PREDIV_S+1” is a non-zero multiple of 256 (i.e: PREDIV_S[7:0] = 0xFF), the RTC_CALIB frequency is $f_{RTCCLK}/(256 * (PREDIV_A+1))$. This corresponds to a calibration output at 1 Hz for prescaler default values (PREDIV_A = Ox7F, PREDIV_S = 0xFF), with an RTCCLK frequency at 32.768 kHz. The 1 Hz output is affected when a shift operation is on going and may toggle during the shift operation (SHPF=1).

Note: When COSEL bit is cleared, the RTC_CALIB output is the output of the 6th stage of the asynchronous prescaler.

When COSEL bit is set, the RTC_CALIB output is the output of the 8th stage of the synchronous prescaler.

24.3.15 Alarm output

The OSEL[1:0] control bits in the RTC_CR register are used to activate the alarm output RTC_ALARM, and to select the function which is output. These functions reflect the contents of the corresponding flags in the RTC_ISR register.

The polarity of the output is determined by the POL control bit in RTC_CR so that the opposite of the selected flag bit is output when POL is set to 1.

Alarm output

The RTC_ALARM pin can be configured in output open drain or output push-pull using RTC_OR register.

Note: Once the RTC_ALARM output is enabled, it has priority over RTC_CALIB (COE bit is don't care and must be kept cleared).

24.4 RTC low-power modes

Table 151. Effect of low-power modes on RTC

Mode	Description
Sleep	No effect RTC interrupts cause the device to exit the Sleep mode.
Low-power run	No effect.
Low-power sleep	No effect. RTC interrupts cause the device to exit the Low-power sleep mode.
Stop 0	The RTC remains active when the RTC clock source is LSE or LSI. RTC alarm, RTC tamper event, RTC timestamp event, and RTC Wakeup cause the device to exit the Stop mode.
Stop 1	
Standby	The RTC remains active when the RTC clock source is LSE or LSI. RTC alarm, RTC tamper event, RTC timestamp event, and RTC Wakeup cause the device to exit the Standby mode.
Shutdown	The RTC remains active when the RTC clock source is LSE. RTC alarm, RTC tamper event, RTC timestamp event, and RTC Wakeup cause the device to exit the Shutdown mode.

24.5 RTC interrupts

All RTC interrupts are connected to the EXTI controller. Refer to *Section 14: Extended interrupt and event controller (EXTI)*.

Table 152. Interrupt control bits

Interrupt event	Event flag	Enable control bit	Exit from Sleep mode	Exit from Stop mode	Exit from Standby mode
Alarm A	ALRAF	ALRAIE	Yes	Yes(1)	Yes(1)
Alarm B	ALRBF	ALRBIE	Yes	Yes(1)	Yes(1)
RTC_TS input (timestamp)	TSF	TSIE	Yes	Yes(1)	Yes(1)
RTC_TAMP2 input detection	TAMP2F	TAMPIE	Yes	Yes(1)	Yes(1)
Wakeup timer interrupt	WUTF	WUTIE	Yes	Yes(1)	Yes(1)

1. Wakeup from STOP and Standby modes is possible only when the RTC clock source is LSE or LSI.

24.6 RTC registers

Refer to *Section 1.2 on page 50* of the reference manual for a list of abbreviations used in register descriptions.

The peripheral registers can be accessed by words (32-bit).

24.6.1 RTC time register (RTC_TR)

The RTC_TR is the calendar time shadow register. This register must be written in initialization mode only. Refer to *Calendar initialization and configuration on page 722* and *Reading the calendar on page 723*.

This register is write protected. The write access procedure is described in *RTC register write protection on page 722*.

Address offset: 0x00

Backup domain reset value: 0x0000 0000

System reset: 0x0000 0000 when BYPSHAD = 0. Not affected when BYPSHAD = 1.

31	30	29	28	27	26	25	24	23	22	21	20	19	18	17	16
Res.	Res.	Res.	Res.	Res.	Res.	Res.	Res.	Res.	PM	HT[1:0]		HU[3:0]			
									rw	rw	rw	rw	rw	rw	rw

15	14	13	12	11	10	9	8	7	6	5	4	3	2	1	0
Res.	MNT[2:0]			MNU[3:0]				Res.	ST[2:0]			SU[3:0]			
	rw	rw	rw	rw	rw	rw	rw		rw	rw	rw	rw	rw	rw	rw

Bits 31:23 Reserved, must be kept at reset value.

Bit 22 **PM**: AM/PM notation
0: AM or 24-hour format
1: PM

Bits 21:20 **HT[1:0]**: Hour tens in BCD format

Bits 19:16 **HU[3:0]**: Hour units in BCD format

Bit 15 Reserved, must be kept at reset value.

Bits 14:12 **MNT[2:0]**: Minute tens in BCD format

Bits 11:8 **MNU[3:0]**: Minute units in BCD format

Bit 7 Reserved, must be kept at reset value.

Bits 6:4 **ST[2:0]**: Second tens in BCD format

Bits 3:0 **SU[3:0]**: Second units in BCD format

24.6.2 RTC date register (RTC_DR)

The RTC_DR is the calendar date shadow register. This register must be written in initialization mode only. Refer to *Calendar initialization and configuration on page 722* and *Reading the calendar on page 723*.

This register is write protected. The write access procedure is described in *RTC register write protection on page 722*.

Address offset: 0x04

Backup domain reset value: 0x0000 2101

System reset: 0x0000 2101 when BYPSHAD = 0. Not affected when BYPSHAD = 1.

31	30	29	28	27	26	25	24	23	22	21	20	19	18	17	16
Res.	Res.	Res.	Res.	Res.	Res.	Res.	Res.	YT[3:0]				YU[3:0]			
								rw	rw	rw	rw	rw	rw	rw	rw

15	14	13	12	11	10	9	8	7	6	5	4	3	2	1	0
WDU[2:0]			MT	MU[3:0]				Res.	Res.	DT[1:0]		DU[3:0]			
rw	rw	rw	rw	rw	rw	rw	rw			rw	rw	rw	rw	rw	rw

Bits 31:24 Reserved, must be kept at reset value.

Bits 23:20 **YT[3:0]**: Year tens in BCD format

Bits 19:16 **YU[3:0]**: Year units in BCD format

Bits 15:13 **WDU[2:0]**: Week day units
000: forbidden
001: Monday
...
111: Sunday

Bit 12 **MT**: Month tens in BCD format

Bits 11:8 **MU[3:0]**: Month units in BCD format

Bits 7:6 Reserved, must be kept at reset value.

Bits 5:4 **DT[1:0]**: Date tens in BCD format

Bits 3:0 **DU[3:0]**: Date units in BCD format

24.6.3 RTC control register (RTC_CR)

Address offset: 0x08

Backup domain reset value: 0x0000 0000

System reset: not affected

31	30	29	28	27	26	25	24	23	22	21	20	19	18	17	16
Res.	Res.	Res.	Res.	Res.	Res.	Res.	ITSE	COE	OSEL[1:0]		POL	COSEL	BKP	SUB1H	ADD1H
							rw	rw	rw	rw	rw	rw	rw	w	w

15	14	13	12	11	10	9	8	7	6	5	4	3	2	1	0
TSIE	WUTIE	ALRBIE	ALRAIE	TSE	WUTE	ALRBE	ALRAE	Res.	FMT	BYPS HAD	REFCKON	TSEDGE	WUCKSEL[2:0]		
rw	rw	rw	rw	rw	rw	rw	rw		rw	rw	rw	rw	rw	rw	rw

Bits 31:25 Reserved, must be kept at reset value.

Bit 24 **ITSE**: timestamp on internal event enable

0: internal event timestamp disabled
1: internal event timestamp enabled

Bit 23 **COE**: Calibration output enable

This bit enables the RTC_CALIB output

0: Calibration output disabled
1: Calibration output enabled

Bits 22:21 **OSEL[1:0]**: Output selection

These bits are used to select the flag to be routed to RTC_ALARM output

00: Output disabled
01: Alarm A output enabled
10: Alarm B output enabled
11: Wake-up output enabled

Bit 20 **POL**: Output polarity

This bit is used to configure the polarity of RTC_ALARM output

0: The pin is high when ALRAF/ALRBF/WUTF is asserted (depending on OSEL[1:0])
1: The pin is low when ALRAF/ALRBF/WUTF is asserted (depending on OSEL[1:0]).

Bit 19 **COSEL**: Calibration output selection

When COE=1, this bit selects which signal is output on RTC_CALIB.

0: Calibration output is 512 Hz (with default prescaler setting)
1: Calibration output is 1 Hz (with default prescaler setting)

These frequencies are valid for RTCCLK at 32.768 kHz and prescalers at their default values (PREDIV_A=127 and PREDIV_S=255). Refer to *Section 24.3.14: Calibration clock output*

Bit 18 **BKP**: Backup

This bit can be written by the user to memorize whether the daylight saving time change has been performed or not.

Bit 17 **SUB1H**: *S*ubtract 1 hour (winter time change)

When this bit is set, 1 hour is subtracted to the calendar time if the current hour is not 0. This bit is always read as 0.

Setting this bit has no effect when current hour is 0.

0: No effect
1: Subtracts 1 hour to the current time. This can be used for winter time change outside initialization mode.

Bit 16 **ADD1H**: Add 1 hour (summer time change)

When this bit is set, 1 hour is added to the calendar time. This bit is always read as 0.

0: No effect
1: Adds 1 hour to the current time. This can be used for summer time change outside initialization mode.

Bit 15 **TSIE**: Time-stamp interrupt enable

0: Time-stamp Interrupt disable
1: Time-stamp Interrupt enable

Bit 14 **WUTIE**: Wake-up timer interrupt enable

0: Wake-up timer interrupt disabled
1: Wake-up timer interrupt enabled

Bit 13 **ALRBIE**: *Alarm B interrupt enable*

0: Alarm B Interrupt disable
1: Alarm B Interrupt enable

Bit 12 **ALRAIE**: Alarm A interrupt enable

0: Alarm A interrupt disabled
1: Alarm A interrupt enabled

Bit 11 **TSE**: timestamp enable

0: timestamp disable
1: timestamp enable

Bit 10 **WUTE**: Wake-up timer enable

0: Wake-up timer disabled
1: Wake-up timer enabled

Note: When the wake-up timer is disabled, wait for WUTWF=1 before enabling it again.

Bit 9 **ALRBE**: *Alarm B enable*

0: Alarm B disabled
1: Alarm B enabled

Bit 8 **ALRAE:** Alarm A enable

0: Alarm A disabled
1: Alarm A enabled

Bit 7 Reserved, must be kept at reset value.

Bit 6 **FMT**: Hour format

0: 24 hour/day format
1: AM/PM hour format

Bit 5 **BYPSHAD**: Bypass the shadow registers

0: Calendar values (when reading from RTC_SSR, RTC_TR, and RTC_DR) are taken from the shadow registers, which are updated once every two RTCCLK cycles.

1: Calendar values (when reading from RTC_SSR, RTC_TR, and RTC_DR) are taken directly from the calendar counters.

Note: If the frequency of the APB clock is less than seven times the frequency of RTCCLK, BYPSHAD must be set to '1'.

Bit 4 **REFCKON**: RTC_REFIN reference clock detection enable (50 or 60 Hz)

0: RTC_REFIN detection disabled
1: RTC_REFIN detection enabled

Note: PREDIV_S must be 0x00FF.

Bit 3 **TSEDGE**: Time-stamp event active edge

0: RTC_TS input rising edge generates a time-stamp event
1: RTC_TS input falling edge generates a time-stamp event
TSE must be reset when TSEDGE is changed to avoid unwanted TSF setting.

Bits 2:0 **WUCKSEL[2:0]**: Wake-up clock selection

000: RTC/16 clock is selected
001: RTC/8 clock is selected
010: RTC/4 clock is selected
011: RTC/2 clock is selected
10x: ck_spre (usually 1 Hz) clock is selected
11x: ck_spre (usually 1 Hz) clock is selected and 2^{16} is added to the WUT counter value (see note below)

Note: Bits 7, 6 and 4 of this register can be written in initialization mode only (RTC_ISR/INITF = 1).

WUT = Wake-up unit counter value. WUT = (0x0000 to 0xFFFF) + 0x10000 added when WUCKSEL[2:1 = 11].

Bits 2 to 0 of this register can be written only when RTC_CR WUTE bit = 0 and RTC_ISR WUTWF bit = 1.

It is recommended not to change the hour during the calendar hour increment as it could mask the incrementation of the calendar hour.

ADD1H and SUB1H changes are effective in the next second.

This register is write protected. The write access procedure is described in RTC register write protection on page 722.

Caution: TSE must be reset when TSEDGE is changed to avoid spuriously setting of TSF.

24.6.4 RTC initialization and status register (RTC_ISR)

Address offset: 0x0C

Backup domain reset value: 0x0000 0007

System reset: not affected except INIT, INITF, and RSF bits which are cleared to ‘0’

31	30	29	28	27	26	25	24	23	22	21	20	19	18	17	16
Res.	Res.	Res.	Res.	Res.	Res.	Res.	Res.	Res.	Res.	Res.	Res.	Res.	Res.	ITSF	RECALPF
														rc_w0	r

15	14	13	12	11	10	9	8	7	6	5	4	3	2	1	0
Res.	TAMP2F	Res.	TSOVF	TSF	WUTF	ALRBF	ALRAF	INIT	INITF	RSF	INITS	SHPF	WUTWF	ALRBWF	ALRAWF
	rc_w0		rc_w0	rc_w0	rc_w0	rc_w0	rc_w0	rw	r	rc_w0	r	r	r	r	r

Bits 31:18 Reserved, must be kept at reset value.

Bit 17 **ITSF**: Internal tTime-stamp flag

This flag is set by hardware when a time-stamp on the internal event occurs.

This flag is cleared by software by writing 0, and must be cleared together with TSF bit by writing 0 in both bits.

Bit 16 **RECALPF**: Recalibration pending Flag

The RECALPF status flag is automatically set to ‘1’ when software writes to the RTC_CALR register, indicating that the RTC_CALR register is blocked. When the new calibration settings are taken into account, this bit returns to ‘0’. Refer to *Re-calibration on-the-fly*.

Bit 15 Reserved, must be kept at reset value.

Bit 14 **TAMP2F**: RTC_TAMP2 detection flag

This flag is set by hardware when a tamper detection event is detected on the RTC_TAMP2 input.

It is cleared by software writing 0

Bit 13 Reserved, must be kept at reset value.

Bit 12 **TSOVF**: Time-stamp overflow flag

This flag is set by hardware when a time-stamp event occurs while TSF is already set.

This flag is cleared by software by writing 0. It is recommended to check and then clear TSOVF only after clearing the TSF bit. Otherwise, an overflow might not be noticed if a time-stamp event occurs immediately before the TSF bit is cleared.

Bit 11 **TSF**: Time-stamp flag

This flag is set by hardware when a time-stamp event occurs.

This flag is cleared by software by writing 0. If ITSF flag is set, TSF must be cleared together with ITSF by writing 0 in both bits.

Bit 10 **WUTF**: Wake-up timer flag

This flag is set by hardware when the wake-up auto-reload counter reaches 0.

This flag is cleared by software by writing 0.

This flag must be cleared by software at least 1.5 RTCCLK periods before WUTF is set to 1 again.

Bit 9 **ALRBF**: Alarm B flag

This flag is set by hardware when the time/date registers (RTC_TR and RTC_DR) match the Alarm B register (RTC_ALRMBR).

This flag is cleared by software by writing 0.

Bit 8 **ALRAF**: Alarm A flag

This flag is set by hardware when the time/date registers (RTC_TR and RTC_DR) match the Alarm A register (RTC_ALRMAR).

This flag is cleared by software by writing 0.

Bit 7 **INIT**: Initialization mode

0: Free running mode

1: Initialization mode used to program time and date register (RTC_TR and RTC_DR), and prescaler register (RTC_PRER). Counters are stopped and start counting from the new value when INIT is reset.

Note: This bit is write protected. The write access procedure is described in RTC register write protection on page 722.

Bit 6 **INITF**: Initialization flag

When this bit is set to 1, the RTC is in initialization state, and the time, date and prescaler registers can be updated.

0: Calendar registers update is not allowed

1: Calendar registers update is allowed

Bit 5 **RSF**: Registers synchronization flag

This bit is set by hardware each time the calendar registers are copied into the shadow registers (RTC_SSR, RTC_TR and RTC_DR). This bit is cleared by hardware in initialization mode, while a shift operation is pending (SHPF=1), or when in bypass shadow register mode (BYPSHAD=1). This bit can also be cleared by software.

It is cleared either by software or by hardware in initialization mode.

0: Calendar shadow registers not yet synchronized

1: Calendar shadow registers synchronized

Note: This bit is write protected. The write access procedure is described in RTC register write protection on page 722.

Bit 4 **INITS**: Initialization status flag

This bit is set by hardware when the calendar year field is different from 0 (Backup domain reset state).

0: Calendar has not been initialized

1: Calendar has been initialized

Bit 3 **SHPF**: Shift operation pending

0: No shift operation is pending

1: A shift operation is pending

This flag is set by hardware as soon as a shift operation is initiated by a write to the RTC_SHIFTR register. It is cleared by hardware when the corresponding shift operation has been executed. Writing to the SHPF bit has no effect.

Bit 2 **WUTWF**: Wake-up timer write flag

This bit is set by hardware up to 2 RTCCLK cycles after the WUTE bit has been set to 0 in RTC_CR, and is cleared up to 2 RTCCLK cycles after the WUTE bit has been set to 1. The wake-up timer values can be changed when WUTE bit is cleared and WUTWF is set.

0: Wake-up timer configuration update not allowed

1: Wake-up timer configuration update allowed

Bit 1 **ALRBWF**: Alarm B write flag

This bit is set by hardware when Alarm B values can be changed, after the ALRBE bit has been set to 0 in RTC_CR.

It is cleared by hardware in initialization mode.

0: Alarm B update not allowed

1: Alarm B update allowed

Bit 0 **ALRAWF**: Alarm A write flag

This bit is set by hardware when Alarm A values can be changed, after the ALRAE bit has been set to 0 in RTC_CR.

It is cleared by hardware in initialization mode.

0: Alarm A update not allowed

1: Alarm A update allowed

Note: The bits ALRAF, ALRBF, WUTF and TSF are cleared 2 APB clock cycles after programming them to 0.

24.6.5 RTC prescaler register (RTC_PRER)

This register must be written in initialization mode only. The initialization must be performed in two separate write accesses. Refer to *Calendar initialization and configuration on page 722*.

This register is write protected. The write access procedure is described in *RTC register write protection on page 722*.

Address offset: 0x10

Backup domain reset value: 0x007F 00FF

System reset: not affected

31	30	29	28	27	26	25	24	23	22	21	20	19	18	17	16
Res.	Res.	Res.	Res.	Res.	Res.	Res.	Res.	Res.	PREDIV_A[6:0]						
									rw	rw	rw	rw	rw	rw	rw

15	14	13	12	11	10	9	8	7	6	5	4	3	2	1	0
Res.	PREDIV_S[14:0]														
	rw	rw	rw	rw	rw	rw	rw	rw	rw	rw	rw	rw	rw	rw	rw

Bits 31:23 Reserved, must be kept at reset value.

Bits 22:16 **PREDIV_A[6:0]**: Asynchronous prescaler factor
This is the asynchronous division factor:
ck_apre frequency = RTCCLK frequency/(PREDIV_A+1)

Bit 15 Reserved, must be kept at reset value.

Bits 14:0 **PREDIV_S[14:0]**: Synchronous prescaler factor
This is the synchronous division factor:
ck_spre frequency = ck_apre frequency/(PREDIV_S+1)

24.6.6 RTC wake-up timer register (RTC_WUTR)

This register can be written only when WUTWF is set to 1 in RTC_ISR.

This register is write protected. The write access procedure is described in *RTC register write protection on page 722*.

Address offset: 0x14

Backup domain reset value: 0x0000 FFFF

System reset: not affected

31	30	29	28	27	26	25	24	23	22	21	20	19	18	17	16
Res.	Res.	Res.	Res.	Res.	Res.	Res.	Res.	Res.	Res.	Res.	Res.	Res.	Res.	Res.	Res.

15	14	13	12	11	10	9	8	7	6	5	4	3	2	1	0
WUT[15:0]															
rw	rw	rw	rw	rw	rw	rw	rw	rw	rw	rw	rw	rw	rw	rw	rw

Bits 31:16 Reserved, must be kept at reset value.

Bits 15:0 **WUT[15:0]**: Wake-up auto-reload value bits

When the wake-up timer is enabled (WUTE set to 1), the WUTF flag is set every (WUT[15:0] + 1) ck_wut cycles. The ck_wut period is selected through WUCKSEL[2:0] bits of the RTC_CR register

When WUCKSEL[2] = 1, the wake-up timer becomes 17-bits and WUCKSEL[1] effectively becomes WUT[16] the most-significant bit to be reloaded into the timer.

The first assertion of WUTF occurs (WUT+1) ck_wut cycles after WUTE is set. Setting WUT[15:0] to 0x0000 with WUCKSEL[2:0] =011 (RTCCLK/2) is forbidden.

24.6.7 RTC alarm A register (RTC_ALRMAR)

This register can be written only when ALRAWF is set to 1 in RTC_ISR, or in initialization mode.

This register is write protected. The write access procedure is described in *RTC register write protection on page 722*.

Address offset: 0x1C

Backup domain reset value: 0x0000 0000

System reset: not affected

31	30	29	28	27	26	25	24	23	22	21	20	19	18	17	16
MSK4	WDSEL	DT[1:0]		DU[3:0]				MSK3	PM	HT[1:0]		HU[3:0]			
rw	rw	rw	rw	rw	rw	rw	rw	rw	rw	rw	rw	rw	rw	rw	rw
15	14	13	12	11	10	9	8	7	6	5	4	3	2	1	0
MSK2	MNT[2:0]			MNU[3:0]				MSK1	ST[2:0]			SU[3:0]			
rw	rw	rw	rw	rw	rw	rw	rw	rw	rw	rw	rw	rw	rw	rw	rw

Bit 31 **MSK4**: Alarm A date mask
0: Alarm A set if the date/day match
1: Date/day don't care in Alarm A comparison

Bit 30 **WDSEL**: Week day selection
0: DU[3:0] represents the date units
1: DU[3:0] represents the week day. DT[1:0] is don't care.

Bits 29:28 **DT[1:0]**: Date tens in BCD format.

Bits 27:24 **DU[3:0]**: Date units or day in BCD format.

Bit 23 **MSK3**: Alarm A hours mask
0: Alarm A set if the hours match
1: Hours don't care in Alarm A comparison

Bit 22 **PM:** AM/PM notation
0: AM or 24-hour format
1: PM

Bits 21:20 **HT[1:0]**: Hour tens in BCD format.

Bits 19:16 **HU[3:0]**: Hour units in BCD format.

Bit 15 **MSK2**: Alarm A minutes mask
0: Alarm A set if the minutes match
1: Minutes don't care in Alarm A comparison

Bits 14:12 **MNT[2:0]**: Minute tens in BCD format.

Bits 11:8 **MNU[3:0]**: Minute units in BCD format.

Bit 7 **MSK1**: Alarm A seconds mask
0: Alarm A set if the seconds match
1: Seconds don't care in Alarm A comparison

Bits 6:4 **ST[2:0]**: Second tens in BCD format.

Bits 3:0 **SU[3:0]**: Second units in BCD format.

24.6.8 RTC alarm B register (RTC_ALRMBR)

This register can be written only when ALRBWF is set to 1 in RTC_ISR, or in initialization mode.

This register is write protected. The write access procedure is described in *RTC register write protection on page 722*.

Address offset: 0x20

Backup domain reset value: 0x0000 0000

System reset: not affected

31	30	29	28	27	26	25	24	23	22	21	20	19	18	17	16
MSK4	WDSEL	DT[1:0]		DU[3:0]				MSK3	PM	HT[1:0]		HU[3:0]			
rw	rw	rw	rw	rw	rw	rw	rw	rw	rw	rw	rw	rw	rw	rw	rw
15	14	13	12	11	10	9	8	7	6	5	4	3	2	1	0
MSK2	MNT[2:0]			MNU[3:0]				MSK1	ST[2:0]			SU[3:0]			
rw	rw	rw	rw	rw	rw	rw	rw	rw	rw	rw	rw	rw	rw	rw	rw

Bit 31 **MSK4**: Alarm B date mask
0: Alarm B set if the date and day match
1: Date and day don’t care in Alarm B comparison

Bit 30 **WDSEL**: Week day selection
0: DU[3:0] represents the date units
1: DU[3:0] represents the week day. DT[1:0] is don’t care.

Bits 29:28 **DT[1:0]**: Date tens in BCD format

Bits 27:24 **DU[3:0]**: Date units or day in BCD format

Bit 23 **MSK3**: Alarm B hours mask
0: Alarm B set if the hours match
1: Hours don’t care in Alarm B comparison

Bit 22 **PM:** AM/PM notation
0: AM or 24-hour format
1: PM

Bits 21:20 **HT[1:0]**: Hour tens in BCD format

Bits 19:16 **HU[3:0]**: Hour units in BCD format

Bit 15 **MSK2**: Alarm B minutes mask
0: Alarm B set if the minutes match
1: Minutes don’t care in Alarm B comparison

Bits 14:12 **MNT[2:0]**: Minute tens in BCD format

Bits 11:8 **MNU[3:0]**: Minute units in BCD format

Bit 7 **MSK1**: Alarm B seconds mask
0: Alarm B set if the seconds match
1: Seconds don’t care in Alarm B comparison

Bits 6:4 **ST[2:0]**: Second tens in BCD format

Bits 3:0 **SU[3:0]**: Second units in BCD format

24.6.9 RTC write protection register (RTC_WPR)

Address offset: 0x24

Reset value: 0x0000 0000

31	30	29	28	27	26	25	24	23	22	21	20	19	18	17	16
Res.	Res.	Res.	Res.	Res.	Res.	Res.	Res.	Res.	Res.	Res.	Res.	Res.	Res.	Res.	Res.

15	14	13	12	11	10	9	8	7	6	5	4	3	2	1	0
Res.	Res.	Res.	Res.	Res.	Res.	Res.	Res.	KEY[7:0]							
								w	w	w	w	w	w	w	w

Bits 31:8 Reserved, must be kept at reset value.

Bits 7:0 **KEY[7:0]**: Write protection key

This byte is written by software.

Reading this byte always returns 0x00.

Refer to *RTC register write protection* for a description of how to unlock RTC register write protection.

24.6.10 RTC sub second register (RTC_SSR)

Address offset: 0x28

Backup domain reset value: 0x0000 0000

System reset: 0x0000 0000 when BYPSHAD = 0. Not affected when BYPSHAD = 1.

31	30	29	28	27	26	25	24	23	22	21	20	19	18	17	16
Res.	Res.	Res.	Res.	Res.	Res.	Res.	Res.	Res.	Res.	Res.	Res.	Res.	Res.	Res.	Res.

15	14	13	12	11	10	9	8	7	6	5	4	3	2	1	0
SS[15:0]															
r	r	r	r	r	r	r	r	r	r	r	r	r	r	r	r

Bits 31:16 Reserved, must be kept at reset value.

Bits 15:0 **SS[15:0]**: Sub second value

SS[15:0] is the value in the synchronous prescaler counter. The fraction of a second is given by the formula below:

Second fraction = (PREDIV_S - SS) / (PREDIV_S + 1)

Note: SS can be larger than PREDIV_S only after a shift operation. In that case, the correct time/date is one second less than as indicated by RTC_TR/RTC_DR.

24.6.11 RTC shift control register (RTC_SHIFTR)

This register is write protected. The write access procedure is described in *RTC register write protection on page 722.*

Address offset: 0x2C

Backup domain reset value: 0x0000 0000

System reset: not affected

31	30	29	28	27	26	25	24	23	22	21	20	19	18	17	16
ADD1S	Res.	Res.	Res.	Res.	Res.	Res.	Res.	Res.	Res.	Res.	Res.	Res.	Res.	Res.	Res.
w															

15	14	13	12	11	10	9	8	7	6	5	4	3	2	1	0
Res.	SUBFS[14:0]														
	w	w	w	w	w	w	w	w	w	w	w	w	w	w	w

Bit 31 **ADD1S**: Add one second

0: No effect

1: Add one second to the clock/calendar

This bit is write only and is always read as zero. Writing to this bit has no effect when a shift operation is pending (when SHPF=1, in RTC_ISR).

This function is intended to be used with SUBFS (see description below) in order to effectively add a fraction of a second to the clock in an atomic operation.

Bits 30:15 Reserved, must be kept at reset value.

Bits 14:0 **SUBFS[14:0]**: Subtract a fraction of a second

These bits are write only and is always read as zero. Writing to this bit has no effect when a shift operation is pending (when SHPF=1, in RTC_ISR).

The value which is written to SUBFS is added to the synchronous prescaler counter. Since this counter counts down, this operation effectively subtracts from (delays) the clock by:

Delay (seconds) = SUBFS / (PREDIV_S + 1)

A fraction of a second can effectively be added to the clock (advancing the clock) when the ADD1S function is used in conjunction with SUBFS, effectively advancing the clock by:

Advance (seconds) = (1 - (SUBFS / (PREDIV_S + 1))).

Note: Writing to SUBFS causes RSF to be cleared. Software can then wait until RSF=1 to be sure that the shadow registers have been updated with the shifted time.

24.6.12 RTC timestamp time register (RTC_TSTR)

The content of this register is valid only when TSF is set to 1 in RTC_ISR. It is cleared when TSF bit is reset.

Address offset: 0x30

Backup domain reset value: 0x0000 0000

System reset: not affected

31	30	29	28	27	26	25	24	23	22	21	20	19	18	17	16
Res.	Res.	Res.	Res.	Res.	Res.	Res.	Res.	Res.	PM	HT[1:0]		HU[3:0]			
									r	r	r	r	r	r	r

15	14	13	12	11	10	9	8	7	6	5	4	3	2	1	0
Res.	MNT[2:0]			MNU[3:0]				Res.	ST[2:0]			SU[3:0]			
	r	r	r	r	r	r	r		r	r	r	r	r	r	r

Bits 31:23 Reserved, must be kept at reset value.

Bit 22 **PM:** AM/PM notation
0: AM or 24-hour format
1: PM

Bits 21:20 **HT[1:0]**: Hour tens in BCD format.

Bits 19:16 **HU[3:0]**: Hour units in BCD format.

Bit 15 Reserved, must be kept at reset value.

Bits 14:12 **MNT[2:0]**: Minute tens in BCD format.

Bits 11:8 **MNU[3:0]**: Minute units in BCD format.

Bit 7 Reserved, must be kept at reset value.

Bits 6:4 **ST[2:0]**: Second tens in BCD format.

Bits 3:0 **SU[3:0]**: Second units in BCD format.

24.6.13 RTC timestamp date register (RTC_TSDR)

The content of this register is valid only when TSF is set to 1 in RTC_ISR. It is cleared when TSF bit is reset.

Address offset: 0x34

Backup domain reset value: 0x0000 0000

System reset: not affected

31	30	29	28	27	26	25	24	23	22	21	20	19	18	17	16
Res.	Res.	Res.	Res.	Res.	Res.	Res.	Res.	Res.	Res.	Res.	Res.	Res.	Res.	Res.	Res.

15	14	13	12	11	10	9	8	7	6	5	4	3	2	1	0
WDU[2:0]			MT	MU[3:0]				Res.	Res.	DT[1:0]		DU[3:0]			
r	r	r	r	r	r	r	r			r	r	r	r	r	r

Bits 31:16 Reserved, must be kept at reset value.

Bits 15:13 **WDU[2:0]**: Week day units

Bit 12 **MT**: Month tens in BCD format

Bits 11:8 **MU[3:0]**: Month units in BCD format

Bits 7:6 Reserved, must be kept at reset value.

Bits 5:4 **DT[1:0]**: Date tens in BCD format

Bits 3:0 **DU[3:0]**: Date units in BCD format

24.6.14 RTC time-stamp sub second register (RTC_TSSSR)

The content of this register is valid only when RTC_ISR/TSF is set. It is cleared when the RTC_ISR/TSF bit is reset.

Address offset: 0x38

Backup domain reset value: 0x0000 0000

System reset: not affected

31	30	29	28	27	26	25	24	23	22	21	20	19	18	17	16
Res.	Res.	Res.	Res.	Res.	Res.	Res.	Res.	Res.	Res.	Res.	Res.	Res.	Res.	Res.	Res.

15	14	13	12	11	10	9	8	7	6	5	4	3	2	1	0
SS[15:0]															
r	r	r	r	r	r	r	r	r	r	r	r	r	r	r	r

Bits 31:16 Reserved, must be kept at reset value.

Bits 15:0 **SS[15:0]**: Sub second value

SS[15:0] is the value of the synchronous prescaler counter when the timestamp event occurred.

24.6.15 RTC calibration register (RTC_CALR)

This register is write protected. The write access procedure is described in *RTC register write protection on page 722*.

Address offset: 0x3C

Backup domain reset value: 0x0000 0000

System reset: not affected

31	30	29	28	27	26	25	24	23	22	21	20	19	18	17	16
Res.	Res.	Res.	Res.	Res.	Res.	Res.	Res.	Res.	Res.	Res.	Res.	Res.	Res.	Res.	Res.

15	14	13	12	11	10	9	8	7	6	5	4	3	2	1	0
CALP	CALW8	CALW 16	Res.	Res.	Res.	Res.	CALM[8:0]								
rw	rw	rw					rw	rw	rw	rw	rw	rw	rw	rw	rw

Bits 31:16 Reserved, must be kept at reset value.

Bit 15 **CALP**: Increase frequency of RTC by 488.5 ppm

0: No RTCCLK pulses are added.

1: One RTCCLK pulse is effectively inserted every 2^{11} pulses (frequency increased by 488.5 ppm).

This feature is intended to be used in conjunction with CALM, which lowers the frequency of the calendar with a fine resolution. if the input frequency is 32768 Hz, the number of RTCCLK pulses added during a 32-second window is calculated as follows: (512 * CALP) - CALM.

Refer to *Section 24.3.11: RTC smooth digital calibration*.

Bit 14 **CALW8:** Use an 8-second calibration cycle period

When CALW8 is set to ‘1’, the 8-second calibration cycle period is selected.

Note: CALM[1:0] are stuck at “00” when CALW8=’1’. Refer to Section 24.3.11: RTC smooth digital calibration.

Bit 13 **CALW16:** Use a 16-second calibration cycle period

When CALW16 is set to ‘1’, the 16-second calibration cycle period is selected.This bit must not be set to ‘1’ if CALW8=1.

Note: CALM[0] is stuck at ‘0’ when CALW16=’1’. Refer to Section 24.3.11: RTC smooth digital calibration.

Bits 12:9 Reserved, must be kept at reset value.

Bits 8:0 **CALM[8:0]**: Calibration minus

The frequency of the calendar is reduced by masking CALM out of 2^{20} RTCCLK pulses (32 seconds if the input frequency is 32768 Hz). This decreases the frequency of the calendar with a resolution of 0.9537 ppm.

To increase the frequency of the calendar, this feature should be used in conjunction with CALP. See *Section 24.3.11: RTC smooth digital calibration on page 726*.

24.6.16 RTC tamper configuration register (RTC_TAMPCR)

Address offset: 0x40

Backup domain reset value: 0x0000 0000

System reset: not affected

31	30	29	28	27	26	25	24	23	22	21	20	19	18	17	16
Res.	Res.	Res.	Res.	Res.	Res.	Res.	Res.	Res.	Res.	TAMP2 MF	TAMP2 NO ERASE	TAMP2 IE	Res.	Res.	Res.
										rw	rw	rw			

15	14	13	12	11	10	9	8	7	6	5	4	3	2	1	0
TAMP PUDIS	TAMPPRCH [1:0]		TAMPFLT[1:0]		TAMPFREQ[2:0]			TAMP TS	Res.	Res.	TAMP2 TRG	TAMP2 E	TAMPI E	Res.	Res.
rw	rw	rw	rw	rw	rw	rw	rw	rw			rw	rw	rw		

Bits 31:25 Reserved, must be kept at reset value.

Bits 24:22 Reserved, must be kept at reset value.

Bit 21 **TAMP2MF**: Tamper 2 mask flag

0: Tamper 2 event generates a trigger event and TAMP2F must be cleared by software to allow next tamper event detection.

1: Tamper 2 event generates a trigger event. TAMP2F is masked and internally cleared by hardware. The backup registers are not erased.

Note: The Tamper 2 interrupt must not be enabled when TAMP2MF is set.

Bit 20 **TAMP2NOERASE**: Tamper 2 no erase

0: Tamper 2 event erases the backup registers.

1: Tamper 2 event does not erase the backup registers.

Bit 19 **TAMP2IE**: Tamper 2 interrupt enable

0: Tamper 2 interrupt is disabled if TAMPIE = 0.

1: Tamper 2 interrupt enabled.

Bits 18:16 Reserved, must be kept at reset value.

Bit 15 **TAMPPUDIS**: RTC_TAMPx pull-up disable

This bit determines if each of the RTC_TAMPx pins are precharged before each sample.

0: Precharge RTC_TAMPx pins before sampling (enable internal pull-up)

1: Disable precharge of RTC_TAMPx pins.

Bits 14:13 **TAMPPRCH[1:0]**: RTC_TAMPx precharge duration

These bit determines the duration of time during which the pull-up/is activated before each sample. TAMPPRCH is valid for each of the RTC_TAMPx inputs.

0x0: 1 RTCCLK cycle

0x1: 2 RTCCLK cycles

0x2: 4 RTCCLK cycles

0x3: 8 RTCCLK cycles

Bits 12:11 **TAMPFLT[1:0]**: RTC_TAMPx filter count

These bits determines the number of consecutive samples at the specified level (TAMP*TRG) needed to activate a Tamper event. TAMPFLT is valid for each of the RTC_TAMPx inputs.

0x0: Tamper event is activated on edge of RTC_TAMPx input transitions to the active level (no internal pull-up on RTC_TAMPx input).
0x1: Tamper event is activated after 2 consecutive samples at the active level.
0x2: Tamper event is activated after 4 consecutive samples at the active level.
0x3: Tamper event is activated after 8 consecutive samples at the active level.

Bits 10:8 **TAMPFREQ[2:0]**: Tamper sampling frequency

Determines the frequency at which each of the RTC_TAMPx inputs are sampled.

0x0: RTCCLK / 32768 (1 Hz when RTCCLK = 32768 Hz)
0x1: RTCCLK / 16384 (2 Hz when RTCCLK = 32768 Hz)
0x2: RTCCLK / 8192 (4 Hz when RTCCLK = 32768 Hz)
0x3: RTCCLK / 4096 (8 Hz when RTCCLK = 32768 Hz)
0x4: RTCCLK / 2048 (16 Hz when RTCCLK = 32768 Hz)
0x5: RTCCLK / 1024 (32 Hz when RTCCLK = 32768 Hz)
0x6: RTCCLK / 512 (64 Hz when RTCCLK = 32768 Hz)
0x7: RTCCLK / 256 (128 Hz when RTCCLK = 32768 Hz)

Bit 7 **TAMPTS**: Activate timestamp on tamper detection event

0: Tamper detection event does not cause a timestamp to be saved
1: Save timestamp on tamper detection event

TAMPTS is valid even if TSE=0 in the RTC_CR register.

Bits 6:5 Reserved, must be kept at reset value.

Bit 4 **TAMP2TRG**: Active level for RTC_TAMP2 input

if TAMPFLT != 00:
0: RTC_TAMP2 input staying low triggers a tamper detection event.
1: RTC_TAMP2 input staying high triggers a tamper detection event.
if TAMPFLT = 00:
0: RTC_TAMP2 input rising edge triggers a tamper detection event.
1: RTC_TAMP2 input falling edge triggers a tamper detection event.

Bit 3 **TAMP2E**: RTC_TAMP2 input detection enable

0: RTC_TAMP2 detection disabled
1: RTC_TAMP2 detection enabled

Bit 2 **TAMPIE**: Tamper interrupt enable

0: Tamper interrupt disabled
1: Tamper interrupt enabled.

Note: This bit enables the interrupt for all tamper pins events, whatever TAMPxIE level. If this bit is cleared, each tamper event interrupt can be individually enabled by setting TAMPxIE.

Bits 1:0 Reserved, must be kept at reset value.

Caution: When TAMPFLT = 0, TAMPxE must be reset when TAMPxTRG is changed to avoid spuriously setting TAMPxF.

24.6.17 RTC alarm A sub second register (RTC_ALRMASSR)

This register can be written only when ALRAE is reset in RTC_CR register, or in initialization mode.

This register is write protected. The write access procedure is described in *RTC register write protection on page 722*

Address offset: 0x44

Backup domain reset value: 0x0000 0000

System reset: not affected

31	30	29	28	27	26	25	24	23	22	21	20	19	18	17	16
Res.	Res.	Res.	Res.	MASKSS[3:0]				Res.	Res.	Res.	Res.	Res.	Res.	Res.	Res.
				rw	rw	rw	rw								

15	14	13	12	11	10	9	8	7	6	5	4	3	2	1	0
Res.	SS[14:0]														
	rw	rw	rw	rw	rw	rw	rw	rw	rw	rw	rw	rw	w	rw	rw

Bits 31:28 Reserved, must be kept at reset value.

Bits 27:24 MASKSS[3:0]: Mask the most-significant bits starting at this bit

0: No comparison on sub seconds for Alarm A. The alarm is set when the seconds unit is incremented (assuming that the rest of the fields match).
1: SS[14:1] are don't care in Alarm A comparison. Only SS[0] is compared.
2: SS[14:2] are don't care in Alarm A comparison. Only SS[1:0] are compared.
3: SS[14:3] are don't care in Alarm A comparison. Only SS[2:0] are compared.
...
12: SS[14:12] are don't care in Alarm A comparison. SS[11:0] are compared.
13: SS[14:13] are don't care in Alarm A comparison. SS[12:0] are compared.
14: SS[14] is don't care in Alarm A comparison. SS[13:0] are compared.
15: All 15 SS bits are compared and must match to activate alarm.
The overflow bits of the synchronous counter (bits 15) is never compared. This bit can be different from 0 only after a shift operation.

Bits 23:15 Reserved, must be kept at reset value.

Bits 14:0 SS[14:0]: Sub seconds value

This value is compared with the contents of the synchronous prescaler counter to determine if Alarm A is to be activated. Only bits 0 up MASKSS-1 are compared.

24.6.18 RTC alarm B sub second register (RTC_ALRMBSSR)

This register can be written only when ALRBE is reset in RTC_CR register, or in initialization mode.

This register is write protected.The write access procedure is described in *Section : RTC register write protection*.

Address offset: 0x48

Backup domain reset value: 0x0000 0000

System reset: not affected

31	30	29	28	27	26	25	24	23	22	21	20	19	18	17	16
Res.	Res.	Res.	Res.	MASKSS[3:0]				Res.	Res.	Res.	Res.	Res.	Res.	Res.	Res.
				rw	rw	rw	rw								

15	14	13	12	11	10	9	8	7	6	5	4	3	2	1	0
Res.	SS[14:0]														
	rw	rw	rw	rw	rw	rw	rw	rw	rw	rw	rw	rw	w	rw	rw

Bits 31:28 Reserved, must be kept at reset value.

Bits 27:24 **MASKSS[3:0]**: Mask the most-significant bits starting at this bit

0x0: No comparison on sub seconds for Alarm B. The alarm is set when the seconds unit is incremented (assuming that the rest of the fields match).
0x1: SS[14:1] are don't care in Alarm B comparison. Only SS[0] is compared.
0x2: SS[14:2] are don't care in Alarm B comparison. Only SS[1:0] are compared.
0x3: SS[14:3] are don't care in Alarm B comparison. Only SS[2:0] are compared.
...
0xC: SS[14:12] are don't care in Alarm B comparison. SS[11:0] are compared.
0xD: SS[14:13] are don't care in Alarm B comparison. SS[12:0] are compared.
0xE: SS[14] is don't care in Alarm B comparison. SS[13:0] are compared.
0xF: All 15 SS bits are compared and must match to activate alarm.
The overflow bits of the synchronous counter (bits 15) is never compared. This bit can be different from 0 only after a shift operation.

Bits 23:15 Reserved, must be kept at reset value.

Bits 14:0 **SS[14:0]**: Sub seconds value

This value is compared with the contents of the synchronous prescaler counter to determine if Alarm B is to be activated. Only bits 0 up to MASKSS-1 are compared.

24.6.19 RTC option register (RTC_OR)

Address offset: 0x4C

Backup domain reset value: 0x0000 0000

System reset: not affected

31	30	29	28	27	26	25	24	23	22	21	20	19	18	17	16
Res.	Res.	Res.	Res.	Res.	Res.	Res.	Res.	Res.	Res.	Res.	Res.	Res.	Res.	Res.	Res.

15	14	13	12	11	10	9	8	7	6	5	4	3	2	1	0
Res.	Res.	Res.	Res.	Res.	Res.	Res.	Res.	Res.	Res.	Res.	Res.	Res.	Res.	RTC_OUT_RMP	Res.
														rw	

Bits 31:2 Reserved, must be kept at reset value.

Bit 1 **RTC_OUT_RMP**: RTC_OUT remap

Setting this bit allows to remap the RTC outputs on PB2 as follows:
RTC_OUT_RMP = ‘0’: Reserved
RTC_OUT_RMP = ‘1’:
If OSEL /= ‘00’ and COE = ‘0’: RTC_ALARM is output on PB2
If OSEL = ‘00’ and COE = ‘1’: RTC_CALIB is output on PB2
If OSEL /= ‘00’ and COE = ‘1’:

Bit 0 Reserved, must be kept at reset value.

24.6.20 RTC backup registers (RTC_BKPxR)

Address offset: 0x50 to 0x9C

Backup domain reset value: 0x0000 0000

System reset: not affected

31	30	29	28	27	26	25	24	23	22	21	20	19	18	17	16
BKP[31:16]															
rw	rw	rw	rw	rw	rw	rw	rw	rw	rw	rw	rw	rw	rw	rw	rw

15	14	13	12	11	10	9	8	7	6	5	4	3	2	1	0
BKP[15:0]															
rw	rw	rw	rw	rw	rw	rw	rw	rw	rw	rw	rw	rw	w	rw	rw

Bits 31:0 BKP[31:0]

The application can write or read data to and from these registers.
They are powered-on by V_{BAT} when V_{DD} is switched off, so that they are not reset by System reset, and their contents remain valid when the device operates in low-power mode.
This register is reset on a tamper detection event, as long as TAMPxF=1.

24.6.21 RTC register map

Table 153. RTC register map and reset values

Offset	Register name	31	30	29	28	27	26	25	24	23	22	21	20	19	18	17	16	15	14	13	12	11	10	9	8	7	6	5	4	3	2	1	0
0x00	**RTC_TR**	Res.	Res.	Res.	Res.	Res.	Res.	Res.	Res.	Res.	PM	HT[1:0]		HU[3:0]				Res.	MNT[2:0]			MNU[3:0]				Res.	ST[2:0]			SU[3:0]			
	Reset value										0	0	0	0	0	0	0		0	0	0	0	0	0	0		0	0	0	0	0	0	0
0x04	**RTC_DR**	Res.	Res.	Res.	Res.	Res.	Res.	Res.	Res.	YT[3:0]				YU[3:0]				WDU[2:0]			MT	MU[3:0]				Res.	Res.	DT[1:0]		DU[3:0]			
	Reset value									0	0	0	0	0	0	0	0	0	0	1	0	0	0	0	1			0	0	0	0	0	1
0x08	**RTC_CR**	Res.	Res.	Res.	Res.	Res.	Res.	Res.	ITSE	COE	OSEL[1:0]		POL	COSEL	BKP	SUB1H	ADD1H	TSIE	WUTIE	ALRBIE	ALRAIE	TSE	WUTE	ALRBE	ALRAE	Res.	FMT	BYPSHAD	REFCKON	TSEDGE	WUCKSEL[2:0]		
	Reset value								0	0	0	0	0		0	0	0	0	0	0	0	0	0	0	0		0	0	0	0	0	0	0
0x0C	**RTC_ISR**	Res.	Res.	Res.	Res.	Res.	Res.	Res.	Res.	Res.	Res.	Res.	Res.	Res.	Res.	ITSF	RECALPF	Res.	TAMP2F	Res.	TSOVF	TSF	WUTF	ALRBF	ALRAF	INIT	INITF	RSF	INITS	SHPF	WUT WF	ALRBWF	ALRAWF
	Reset value															0	0		0		0	0	0	0	0	0	0	0	0	0	1	1	1
0x10	**RTC_PRER**	Res.	Res.	Res.	Res.	Res.	Res.	Res.	Res.	Res.	PREDIV_A[6:0]							PREDIV_S[14:0]															
	Reset value										1	1	1	1	1	1	1	0	0	0	0	0	0	0	0	1	1	1	1	1	1	1	1
0x14	**RTC_WUTR**	Res.	Res.	Res.	Res.	Res.	Res.	Res.	Res.	Res.	Res.	Res.	Res.	Res.	Res.	Res.	Res.	WUT[15:0]															
	Reset value																	1	1	1	1	1	1	1	1	1	1	1	1	1	1	1	1
0x1C	**RTC_ALRMAR**	MSK4	WDSEL	DT[1:0]		DU[3:0]				MSK3	PM	HT[1:0]		HU[3:0]				MSK2	MNT[2:0]			MNU[3:0]				MSK1	ST[2:0]			SU[3:0]			
	Reset value	0	0	0	0	0	0	0	0	0	0	0	0	0	0	0	0	0	0	0	0	0	0	0	0	0	0	0	0	0	0	0	0
0x20	**RTC_ALRMBR**	MSK4	WDSEL	DT[1:0]		DU[3:0]				MSK3	PM	HT[1:0]		HU[3:0]				MSK2	MNT[2:0]			MNU[3:0]				MSK2	ST[2:0]			SU[3:0]			
	Reset value	0	0	0	0	0	0	0	0	0	0	0	0	0	0	0	0	0	0	0	0	0	0	0	0	0	0	0	0	0	0	0	0
0x24	**RTC_WPR**	Res.	Res.	Res.	Res.	Res.	Res.	Res.	Res.	Res.	Res.	Res.	Res.	Res.	Res.	Res.	Res.	Res.	Res.	Res.	Res.	Res.	Res.	Res.	Res.	KEY							
	Reset value																									0	0	0	0	0	0	0	0
0x28	**RTC_SSR**	Res.	Res.	Res.	Res.	Res.	Res.	Res.	Res.	Res.	Res.	Res.	Res.	Res.	Res.	Res.	Res.	SS[15:0]															
	Reset value																	0	0	0	0	0	0	0	0	0	0	0	0	0	0	0	0
0x2C	**RTC_SHIFTR**	ADD1S	Res.	Res.	Res.	Res.	Res.	Res.	Res.	Res.	Res.	Res.	Res.	Res.	Res.	Res.	Res.	Res.	SUBFS[14:0]														
	Reset value	0																	0	0	0	0	0	0	0	0	0	0	0	0	0	0	0
0x30	**RTC_TSTR**	Res.	Res.	Res.	Res.	Res.	Res.	Res.	Res.	Res.	PM	HT[1:0]		HU[3:0]				Res.	MNT[2:0]			MNU[3:0]				Res.	ST[2:0]			SU[3:0]			
	Reset value										0	0	0	0	0	0	0		0	0	0	0	0	0	0		0	0	0	0	0	0	0

Table 153. RTC register map and reset values (continued)

Offset	Register name	31	30	29	28	27	26	25	24	23	22	21	20	19	18	17	16	15	14	13	12	11	10	9	8	7	6	5	4	3	2	1	0
0x34	**RTC_TSDR**	Res.	Res.	Res.	Res.	Res.	Res.	Res.	Res.	Res.	Res.	Res.	Res.	Res.	Res.	Res.	Res.	WDU[1:0]			MT	MU[3:0]				Res.	Res.	DT[1:0]		DU[3:0]			
	Reset value																	0	0	0	0	0	0	0	0			0	0	0	0	0	0
0x38	**RTC_TSSSR**	Res.	Res.	Res.	Res.	Res.	Res.	Res.	Res.	Res.	Res.	Res.	Res.	Res.	Res.	Res.	Res.	SS[15:0]															
	Reset value																	0	0	0	0	0	0	0	0	0	0	0	0	0	0	0	0
0x3C	**RTC_ CALR**	Res.	Res.	Res.	Res.	Res.	Res.	Res.	Res.	Res.	Res.	Res.	Res.	Res.	Res.	Res.	Res.	CALP	CALW8	CALW16	Res.	Res.	Res.	Res.	CALM[8:0]								
	Reset value																	0	0	0					0	0	0	0	0	0	0	0	0
0x40	**RTC_TAMPCR**	Res.	Res.	Res.	Res.	Res.	Res.	Res.	Res.	Res.	Res.	TAMP2MF	TAMP2NOERASE	TAMP2IE	Res.	Res.	Res.	TAMPPUDIS	TAMPPRCH[1:0]		TAMPFLT[1:0]		TAMPFREQ[2:0]			TAMPTS	Res.	Res.	TAMP2TRG	TAMP2E	TAMPIE	Res.	Res.
	Reset value											0	0	0				0	0	0	0	0	0	0	0	0			0	0	0		
0x44	**RTC_ ALRMASSR**	Res.	Res.	Res.	Res.	MASKSS [3:0]				Res.	Res.	Res.	Res.	Res.	Res.	Res.	Res.	Res.	SS[14:0]														
	Reset value					0	0	0	0										0	0	0	0	0	0	0	0	0	0	0	0	0	0	0
0x48	**RTC_ ALRMBSSR**	Res.	Res.	Res.	Res.	MASKSS [3:0]				Res.	Res.	Res.	Res.	Res.	Res.	Res.	Res.	Res.	SS[14:0]														
	Reset value					0	0	0	0										0	0	0	0	0	0	0	0	0	0	0	0	0	0	0
0x4C	**RTC_ OR**	Res.	Res.	Res.	Res.	Res.	Res.	Res.	Res.	Res.	Res.	Res.	Res.	Res.	Res.	Res.	Res.	Res.	Res.	Res.	Res.	Res.	Res.	Res.	Res.	Res.	Res.	Res.	Res.	Res.	Res.	RTC_OUT_RMP	Res.
	Reset value																															0	
0x50 to 0x9C	**RTC_BKP0R**	BKP[31:0]																															
	Reset value	0	0	0	0	0	0	0	0	0	0	0	0	0	0	0	0	0	0	0	0	0	0	0	0	0	0	0	0	0	0	0	0
	to **RTC_BKP19R**	BKP[31:0]																															
	Reset value	0	0	0	0	0	0	0	0	0	0	0	0	0	0	0	0	0	0	0	0	0	0	0	0	0	0	0	0	0	0	0	0

Refer to *Section 2.2 on page 55* for the register boundary addresses.

25 Independent watchdog (IWDG)

25.1 Introduction

The devices feature an embedded watchdog peripheral (IWDG) that offers a combination of high safety level, timing accuracy, and flexibility of use. This peripheral detects and solves malfunctions due to software failure, and triggers a system reset when the counter reaches a given timeout value.

The independent watchdog is clocked by its own dedicated low-speed clock (LSI), and stays active even if the main clock fails.

The IWDG is best suited for applications that require the watchdog to run as a totally independent process outside the main application, but have lower timing accuracy constraints. For further information on the window watchdog, refer to *Section 26: System window watchdog (WWDG)*.

25.2 IWDG main features

- Free-running downcounter
- Clocked from an independent RC oscillator (can operate in Standby and Stop modes)
- Conditional reset
  - Reset (if watchdog is activated) when the downcounter value becomes lower than 0x000
  - Reset (if watchdog is activated) if the downcounter is reloaded outside the window

25.3 IWDG functional description

25.3.1 IWDG block diagram

Figure 213 shows the functional blocks of the independent watchdog module.

Figure 213. Independent watchdog block diagram

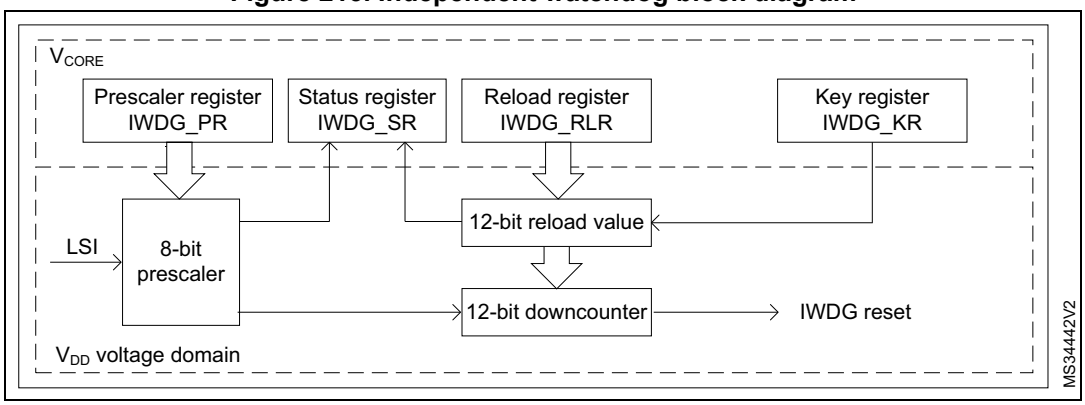

1. The register interface is located in the V_{CORE} voltage domain. The watchdog function is located in the V_{DD} voltage domain, still functional in Stop and Standby modes.

When the independent watchdog is started by writing the value 0x0000 CCCC in the *IWDG key register (IWDG_KR)*, the counter starts counting down from the reset value of 0xFFF. When it reaches the end of count value (0x000), a reset signal is generated (IWDG reset).

Whenever the key value 0x0000 AAAA is written in the *IWDG key register (IWDG_KR)*, the IWDG_RLR value is reloaded in the counter, and the watchdog reset is prevented.

Once running, the IWDG cannot be stopped.

25.3.2 Window option

The IWDG can also work as a window watchdog by setting the appropriate window in the *IWDG window register (IWDG_WINR)*.

If the reload operation is performed while the counter is greater than the value stored in the *IWDG window register (IWDG_WINR)*, a reset is provided.

The default value of the *IWDG window register (IWDG_WINR)* is 0x0000 0FFF, so if it is not updated, the window option is disabled.

As soon as the window value is changed, a reload operation is performed to reset the downcounter to the *IWDG reload register (IWDG_RLR)* value, and to ease the cycle number calculation to generate the next reload.

Configuring the IWDG when the window option is enabled

1. Enable the IWDG by writing 0x0000 CCCC in the *IWDG key register (IWDG_KR)*.
2. Enable register access by writing 0x0000 5555 in the *IWDG key register (IWDG_KR)*.
3. Write the IWDG prescaler by programming *IWDG prescaler register (IWDG_PR)* from 0 to 7.
4. Write the *IWDG reload register (IWDG_RLR)*.
5. Wait for the registers to be updated (IWDG_SR = 0x0000 0000).
6. Write to the *IWDG window register (IWDG_WINR)*. This automatically refreshes the counter value in the *IWDG reload register (IWDG_RLR)*.

Note: Writing the window value allows the counter value to be refreshed by the RLR when the IWDG status register (IWDG_SR) is set to 0x0000 0000.

Configuring the IWDG when the window option is disabled

When the window option is not used, the IWDG can be configured as follows:

1. Enable the IWDG by writing 0x0000 CCCC in the *IWDG key register (IWDG_KR)*.
2. Enable register access by writing 0x0000 5555 in the *IWDG key register (IWDG_KR)*.
3. Write the prescaler by programming the *IWDG prescaler register (IWDG_PR)* from 0 to 7.
4. Write the *IWDG reload register (IWDG_RLR)*.
5. Wait for the registers to be updated (IWDG_SR = 0x0000 0000).
6. Refresh the counter value with IWDG_RLR (IWDG_KR = 0x0000 AAAA).

25.3.3 Hardware watchdog

If this feature is enabled through the device option bits, the watchdog is automatically enabled at power-on, and generates a reset unless the *IWDG key register (IWDG_KR)* is written by the software before the counter reaches the end of count, and if the downcounter is lower than the window value (WIN[11:0]).

25.3.4 Low-power freeze

Depending on the IWDG_STOP and IWDG_STBY options configuration, the IWDG can continue counting or not during the Stop mode and the Standby mode, respectively. If the IWDG is kept running during Stop or Standby modes, it can wake up the device from this mode. Refer to *User and read protection option bytes* for more details.

25.3.5 Register access protection

Write access to *IWDG prescaler register (IWDG_PR)*, *IWDG reload register (IWDG_RLR)*, and *IWDG window register (IWDG_WINR)* is protected. To modify them, first write the code 0x0000 5555 in the *IWDG key register (IWDG_KR)*. A write access to this register with a different value breaks the sequence, and register access is protected again. This is the case of the reload operation (writing 0x0000 AAAA).

A status register is available to indicate that an update of the prescaler, or of the downcounter reload value, or of the window value, is ongoing.

25.3.6 Debug mode

When the CPU1 enters Debug mode (core halted), the IWDG counter either continues to work normally or stops, depending on the configuration of the corresponding bit in DBGMCU freeze register.

25.4 IWDG registers

Refer to *Section 1.2 on page 50* for a list of abbreviations used in register descriptions.

The peripheral registers can be accessed by half-words (16-bit) or words (32-bit).

25.4.1 IWDG key register (IWDG_KR)

Address offset: 0x00

Reset value: 0x0000 0000 (reset by Standby mode)

31	30	29	28	27	26	25	24	23	22	21	20	19	18	17	16
Res.	Res.	Res.	Res.	Res.	Res.	Res.	Res.	Res.	Res.	Res.	Res.	Res.	Res.	Res.	Res.

15	14	13	12	11	10	9	8	7	6	5	4	3	2	1	0
KEY[15:0]															
w	w	w	w	w	w	w	w	w	w	w	w	w	w	w	w

Bits 31:16 Reserved, must be kept at reset value.

Bits 15:0 **KEY[15:0]:** Key value (write only, read 0x0000)

These bits must be written by software at regular intervals with the key value 0xAAAA, otherwise the watchdog generates a reset when the counter reaches 0.

Writing the key value 0x5555 to enable access to the IWDG_PR, IWDG_RLR and IWDG_WINR registers (see *Section 25.3.5: Register access protection*)

Writing the key value 0xCCCC starts the watchdog (except if the hardware watchdog option is selected)

25.4.2 IWDG prescaler register (IWDG_PR)

Address offset: 0x04

Reset value: 0x0000 0000

31	30	29	28	27	26	25	24	23	22	21	20	19	18	17	16
Res.	Res.	Res.	Res.	Res.	Res.	Res.	Res.	Res.	Res.	Res.	Res.	Res.	Res.	Res.	Res.

15	14	13	12	11	10	9	8	7	6	5	4	3	2	1	0
Res.	Res.	Res.	Res.	Res.	Res.	Res.	Res.	Res.	Res.	Res.	Res.	Res.	PR[2:0]		
													rw	rw	rw

Bits 31:3 Reserved, must be kept at reset value.

Bits 2:0 **PR[2:0]:** Prescaler divider

These bits are write access protected see *Section 25.3.5: Register access protection*. They are written by software to select the prescaler divider feeding the counter clock. PVU bit of the *IWDG status register (IWDG_SR)* must be reset in order to be able to change the prescaler divider.

000: divider /4
001: divider /8
010: divider /16
011: divider /32
100: divider /64
101: divider /128
110: divider /256
111: divider /256

Note: Reading this register returns the prescaler value from the V_{DD} voltage domain. This value may not be up to date/valid if a write operation to this register is ongoing. For this reason the value read from this register is valid only when the PVU bit in the IWDG status register (IWDG_SR) is reset.

25.4.3 IWDG reload register (IWDG_RLR)

Address offset: 0x08

Reset value: 0x0000 0FFF (reset by Standby mode)

31	30	29	28	27	26	25	24	23	22	21	20	19	18	17	16
Res.	Res.	Res.	Res.	Res.	Res.	Res.	Res.	Res.	Res.	Res.	Res.	Res.	Res.	Res.	Res.

15	14	13	12	11	10	9	8	7	6	5	4	3	2	1	0
Res.	Res.	Res.	Res.	RL[11:0]											
				rw	rw	rw	rw	rw	rw	rw	rw	rw	rw	rw	rw

Bits 31:12 Reserved, must be kept at reset value.

Bits 11:0 **RL[11:0]:** Watchdog counter reload value

These bits are write access protected see *Register access protection*. They are written by software to define the value to be loaded in the watchdog counter each time the value 0xAAAA is written in the *IWDG key register (IWDG_KR)*. The watchdog counter counts down from this value. The timeout period is a function of this value and the clock prescaler. Refer to the datasheet for the timeout information.

The RVU bit in the *IWDG status register (IWDG_SR)* must be reset to be able to change the reload value.

Note: Reading this register returns the reload value from the V_{DD} voltage domain. This value may not be up to date/valid if a write operation to this register is ongoing on it. For this reason the value read from this register is valid only when the RVU bit in the IWDG status register (IWDG_SR) is reset.

25.4.4 IWDG status register (IWDG_SR)

Address offset: 0x0C

Reset value: 0x0000 0000 (not reset by Standby mode)

31	30	29	28	27	26	25	24	23	22	21	20	19	18	17	16
Res.	Res.	Res.	Res.	Res.	Res.	Res.	Res.	Res.	Res.	Res.	Res.	Res.	Res.	Res.	Res.

15	14	13	12	11	10	9	8	7	6	5	4	3	2	1	0
Res.	Res.	Res.	Res.	Res.	Res.	Res.	Res.	Res.	Res.	Res.	Res.	Res.	WVU	RVU	PVU
													r	r	r

Bits 31:3 Reserved, must be kept at reset value.

Bit 2 **WVU:** Watchdog counter window value update

This bit is set by hardware to indicate that an update of the window value is ongoing. It is reset by hardware when the reload value update operation is completed in the V_{DD} voltage domain (takes up to five prescaled clock cycles).

Window value can be updated only when WVU bit is reset.

Bit 1 **RVU:** Watchdog counter reload value update

This bit is set by hardware to indicate that an update of the reload value is ongoing. It is reset by hardware when the reload value update operation is completed in the V_{DD} voltage domain (takes up to five prescaled clock cycles).

Reload value can be updated only when RVU bit is reset.

Bit 0 **PVU:** Watchdog prescaler value update

This bit is set by hardware to indicate that an update of the prescaler value is ongoing. It is reset by hardware when the prescaler update operation is completed in the V_{DD} voltage domain (takes up to five clock cycles).

Prescaler value can be updated only when PVU bit is reset.

Note: If several reload, prescaler, or window values are used by the application, it is mandatory to wait until RVU bit is reset before changing the reload value, to wait until PVU bit is reset before changing the prescaler value, and to wait until WVU bit is reset before changing the window value. However, after updating the prescaler and/or the reload/window value it is not necessary to wait until RVU or PVU or WVU is reset before continuing code execution except in case of low-power mode entry.

25.4.5 IWDG window register (IWDG_WINR)

Address offset: 0x10

Reset value: 0x0000 0FFF (reset by Standby mode)

31	30	29	28	27	26	25	24	23	22	21	20	19	18	17	16
Res.	Res.	Res.	Res.	Res.	Res.	Res.	Res.	Res.	Res.	Res.	Res.	Res.	Res.	Res.	Res.

15	14	13	12	11	10	9	8	7	6	5	4	3	2	1	0
Res.	Res.	Res.	Res.	WIN[11:0]											
				rw	rw	rw	rw	rw	rw	rw	rw	rw	rw	rw	rw

Bits 31:12 Reserved, must be kept at reset value.

Bits 11:0 **WIN[11:0]:** Watchdog counter window value

These bits are write access protected, see *Section 25.3.5*, they contain the high limit of the window value to be compared with the downcounter.

To prevent a reset, the downcounter must be reloaded when its value is lower than the window register value and greater than 0x0

The WVU bit in the *IWDG status register (IWDG_SR)* must be reset in order to be able to change the reload value.

Note: Reading this register returns the reload value from the V_{DD} voltage domain. This value may not be valid if a write operation to this register is ongoing. For this reason the value read from this register is valid only when the WVU bit in the IWDG status register (IWDG_SR) is reset.

25.4.6 IWDG register map

The following table gives the IWDG register map and reset values.

Table 154. IWDG register map and reset values

Offset	Register name	31	30	29	28	27	26	25	24	23	22	21	20	19	18	17	16	15	14	13	12	11	10	9	8	7	6	5	4	3	2	1	0
0x00	**IWDG_KR**	Res	Res	Res	Res	Res	Res	Res	Res	Res	Res	Res	Res	Res	Res	Res	Res	KEY[15:0]															
	Reset value																	0	0	0	0	0	0	0	0	0	0	0	0	0	0	0	0
0x04	**IWDG_PR**	Res	Res	Res	Res	Res	Res	Res	Res	Res	Res	Res	Res	Res	Res	Res	Res	Res	Res	Res	Res	Res	Res	Res	Res	Res	Res	Res	Res	Res	PR[2:0]		
	Reset value																														0	0	0
0x08	**IWDG_RLR**	Res	Res	Res	Res	Res	Res	Res	Res	Res	Res	Res	Res	Res	Res	Res	Res	Res	Res	Res	Res	RL[11:0]											
	Reset value																					1	1	1	1	1	1	1	1	1	1	1	1
0x0C	**IWDG_SR**	Res	Res	Res	Res	Res	Res	Res	Res	Res	Res	Res	Res	Res	Res	Res	Res	Res	Res	Res	Res	Res	Res	Res	Res	Res	Res	Res	Res	Res	WVU	RVU	PVU
	Reset value																														0	0	0
0x10	**IWDG_WINR**	Res	Res	Res	Res	Res	Res	Res	Res	Res	Res	Res	Res	Res	Res	Res	Res	Res	Res	Res	Res	WIN[11:0]											
	Reset value																					1	1	1	1	1	1	1	1	1	1	1	1

Refer to *Section 2.2 on page 55* for the register boundary addresses.

26 System window watchdog (WWDG)

26.1 Introduction

The system window watchdog (WWDG) is used to detect the occurrence of a software fault, usually generated by external interference or by unforeseen logical conditions, which causes the application program to abandon its normal sequence.

The watchdog circuit generates an MCU reset on expiry of a programmed time period, unless the program refreshes the contents of the down-counter before the T6 bit is cleared. An MCU reset is also generated if the 7-bit down-counter value (in the control register) is refreshed before the down-counter reaches the window register value. This implies that the counter must be refreshed in a limited window.

The WWDG clock is prescaled from the APB clock and has a configurable time window that can be programmed to detect abnormally late or early application behavior.The WWDG is only clocked when CPU1 is in CRun or CSleep mode.

The WWDG is best suited for applications requiring the watchdog to react within an accurate timing window.

26.2 WWDG main features

- Programmable free-running down-counter
- Conditional reset
  - Reset (if watchdog activated) when the down-counter value becomes lower than 0x40
  - Reset (if watchdog activated) if the down-counter is reloaded outside the window (see *Figure 215*)
- Early wake-up interrupt (EWI): triggered (if enabled and the watchdog activated) when the down-counter is equal to 0x40

26.3 WWDG functional description

If the watchdog is activated (the WDGA bit is set in the WWDG_CR register), and when the 7-bit down-counter (T[6:0] bits) is decremented from 0x40 to 0x3F (T6 becomes cleared), it initiates a reset. If the software reloads the counter while the counter is greater than the value stored in the window register, then a reset is generated.

The application program must write in the WWDG_CR register at regular intervals during normal operation to prevent an MCU reset. This operation can take place only when the counter value is lower than or equal to the window register value, and higher than 0x3F. The value to be stored in the WWDG_CR register must be between 0xFF and 0xC0.

Refer to *Figure 214* for the WWDG block diagram.

26.3.1 WWDG block diagram

Figure 214. Watchdog block diagram

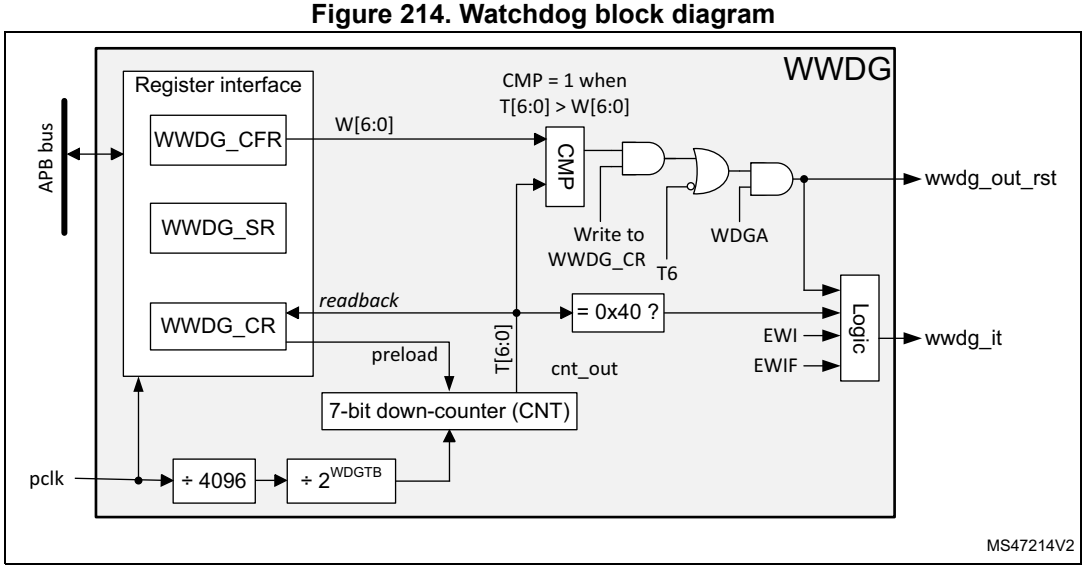

26.3.2 WWDG internal signals

Table 155 gives the list of WWDG internal signals.

Table 155. WWDG internal input/output signals

Signal name	Signal type	Description
pclk	Digital input	APB bus clock
wwdg_out_rst	Digital output	WWDG reset signal output
wwdg_it	Digital output	WWDG early interrupt output

26.3.3 Enabling the watchdog

When the user option WWDG_SW selects “Software window watchdog”, the watchdog is always disabled after a reset. It is enabled by setting the WDGA bit in the WWDG_CR register, then it cannot be disabled again, except by a reset.

When the user option WWDG_SW selects “Hardware window watchdog”, the watchdog is always enabled after a reset, it cannot be disabled.

26.3.4 Controlling the down-counter

This down-counter is free-running, counting down even if the watchdog is disabled. When the watchdog is enabled, the T6 bit must be set to prevent generating an immediate reset.

The T[5:0] bits contain the number of increments that represent the time delay before the watchdog produces a reset. The timing varies between a minimum and a maximum value, due to the unknown status of the prescaler when writing to the WWDG_CR register (see *Figure 215*). The *WWDG configuration register (WWDG_CFR)* contains the high limit of the window: to prevent a reset, the down-counter must be reloaded when its value is lower than

or equal to the window register value, and greater than 0x3F. *Figure 215* describes the window watchdog process.

Note: The T6 bit can be used to generate a software reset (the WDGA bit is set and the T6 bit is cleared).

26.3.5 How to program the watchdog timeout

Use the formula in *Figure 215* to calculate the WWDG timeout.

Warning: When writing to the WWDG_CR register, always write 1 in the T6 bit to avoid generating an immediate reset.

Figure 215. Window watchdog timing diagram

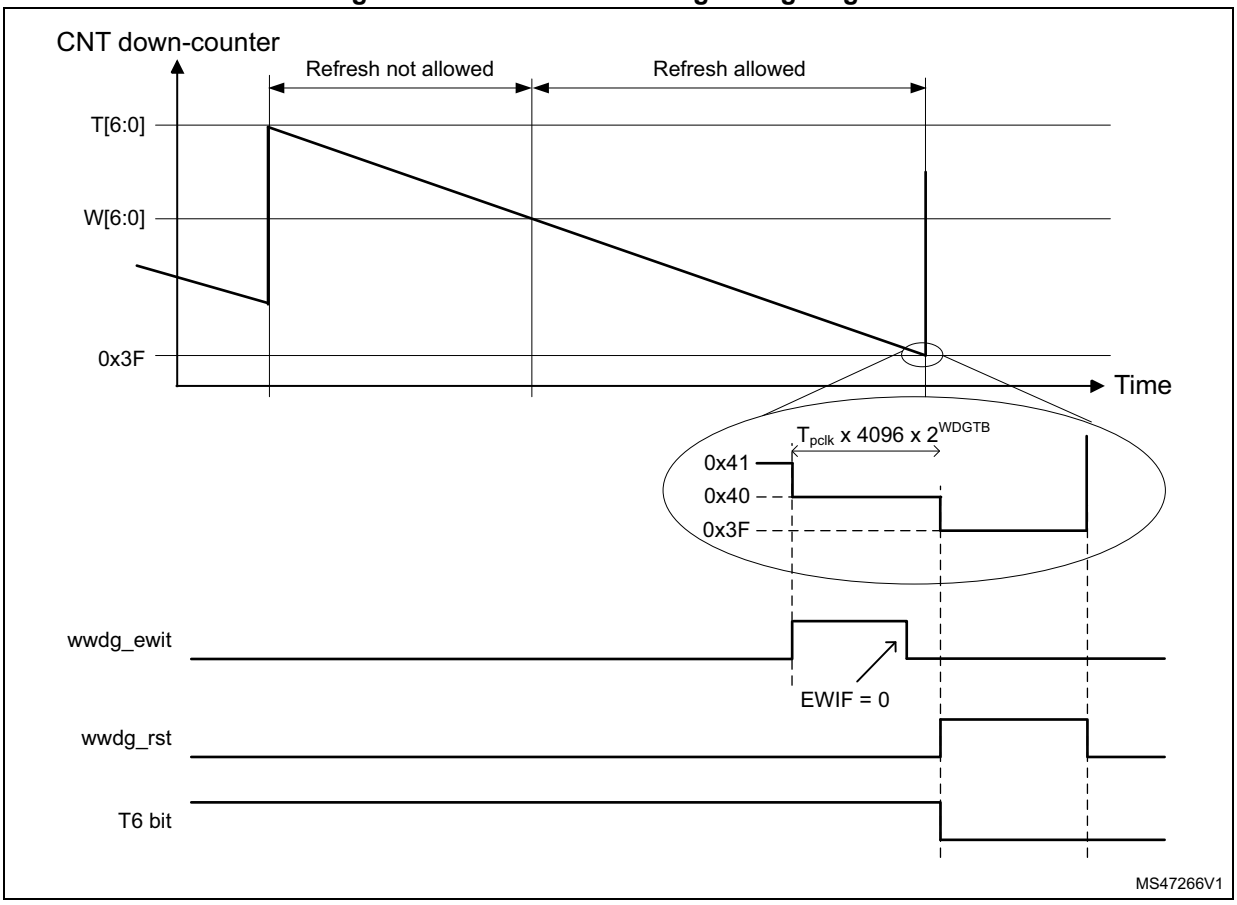

The formula to calculate the timeout value is given by:

$$t_{WWDG} = t_{PCLK} \times 4096 \times 2^{WDGTB[2:0]} \times (T[5:0] + 1) \qquad (ms)$$

where:

- t_{WWDG}: WWDG timeout
- t_{PCLK}: APB clock period measured in ms
- 4096: value corresponding to internal divider

As an example, if APB frequency is 48 MHz, WDGTB[2:0] is set to 3, and T[5:0] is set to 63:

$$t_{WWDG} = (1/48000) \times 4096 \times 2^3 \times (63+1) = 43.69\text{ms}$$

Refer to the datasheet for the minimum and maximum values of t_{WWDG}.

26.3.6 Debug mode

When the CPU1 enters debug mode (processor halted), the WWDG counter either continues to work normally or stops, depending on the configuration bit in DBG module. For more details, refer to *Section 33: Debug support (DBG)Section 33: Debug support (DBG)*.

26.4 WWDG interrupts

The early wake-up interrupt (EWI) can be used if specific safety operations or data logging must be performed before the reset is generated. To enable the early wake-up interrupt, the application must:

- Write EWIF bit of WWDG_SR register to 0, to clear unwanted pending interrupt
- Write EWI bit of WWDG_CFR register to 1, to enable interrupt

When the down-counter reaches the value 0x40, a watchdog interrupt is generated, and the corresponding interrupt service routine (ISR) can be used to trigger specific actions (such as communications or data logging), before resetting the device.

In some applications, the EWI interrupt can be used to manage a software system check and/or system recovery/graceful degradation, without generating a WWDG reset. In this case the corresponding ISR must reload the WWDG counter to avoid the WWDG reset, then trigger the required actions.

The watchdog interrupt is cleared by writing 0 to the EWIF bit in the WWDG_SR register.

Note: When the watchdog interrupt cannot be served (for example due to a system lock in a higher priority task), the WWDG reset is eventually generated.

26.5 WWDG registers

Refer to *Section 1.2: List of abbreviations for registers* for a list of abbreviations used in register descriptions.

The peripheral registers can be accessed by halfwords (16-bit) or words (32-bit).

26.5.1 WWDG control register (WWDG_CR)

Address offset: 0x000

Reset value: 0x0000 007F

31	30	29	28	27	26	25	24	23	22	21	20	19	18	17	16
Res.	Res.	Res.	Res.	Res.	Res.	Res.	Res.	Res.	Res.	Res.	Res.	Res.	Res.	Res.	Res.

15	14	13	12	11	10	9	8	7	6	5	4	3	2	1	0
Res.	Res.	Res.	Res.	Res.	Res.	Res.	Res.	WDGA	T[6:0]						
								rs	rw	rw	rw	rw	rw	rw	rw

Bits 31:8 Reserved, must be kept at reset value.

Bit 7 **WDGA:** Activation bit

This bit is set by software and only cleared by hardware after a reset. When WDGA = 1, the watchdog can generate a reset.

0: Watchdog disabled

1: Watchdog enabled

Bits 6:0 **T[6:0]:** 7-bit counter (MSB to LSB)

These bits contain the value of the watchdog counter, decremented every (4096 x $2^{WDGTB[2:0]}$) PCLK cycles. A reset is produced when it is decremented from 0x40 to 0x3F (T6 becomes cleared).

26.5.2 WWDG configuration register (WWDG_CFR)

Address offset: 0x004

Reset value: 0x0000 007F

31	30	29	28	27	26	25	24	23	22	21	20	19	18	17	16
Res.	Res.	Res.	Res.	Res.	Res.	Res.	Res.	Res.	Res.	Res.	Res.	Res.	Res.	Res.	Res.

15	14	13	12	11	10	9	8	7	6	5	4	3	2	1	0
Res.	Res.	WDGTB[2:0]			Res.	EWI	Res.	Res.	W[6:0]						
		rw	rw	rw		rs			rw	rw	rw	rw	rw	rw	rw

Bits 31:14 Reserved, must be kept at reset value.

Bits 13:11 **WDGTB[2:0]:** Timer base

The timebase of the prescaler can be modified as follows:

000: CK counter clock (PCLK div 4096) div 1

001: CK counter clock (PCLK div 4096) div 2

010: CK counter clock (PCLK div 4096) div 4

011: CK counter clock (PCLK div 4096) div 8

100: CK counter clock (PCLK div 4096) div 16

101: CK counter clock (PCLK div 4096) div 32

110: CK counter clock (PCLK div 4096) div 64

111: CK counter clock (PCLK div 4096) div 128

Bit 10 Reserved, must be kept at reset value.

Bit 9 **EWI:** Early wake-up interrupt enable

Set by software and cleared by hardware after a reset. When set, an interrupt occurs whenever the counter reaches the value 0x40.

Bits 8:7 Reserved, must be kept at reset value.

Bits 6:0 **W[6:0]:** 7-bit window value

These bits contain the window value to be compared with the down-counter.

26.5.3 WWDG status register (WWDG_SR)

Address offset: 0x008

Reset value: 0x0000 0000

31	30	29	28	27	26	25	24	23	22	21	20	19	18	17	16
Res.	Res.	Res.	Res.	Res.	Res.	Res.	Res.	Res.	Res.	Res.	Res.	Res.	Res.	Res.	Res.

15	14	13	12	11	10	9	8	7	6	5	4	3	2	1	0
Res.	Res.	Res.	Res.	Res.	Res.	Res.	Res.	Res.	Res.	Res.	Res.	Res.	Res.	Res.	EWIF
															rc_w0

Bits 31:1 Reserved, must be kept at reset value.

Bit 0 **EWIF:** Early wake-up interrupt flag

This bit is set by hardware when the counter has reached the value 0x40. It must be cleared by software by writing 0. Writing 1 has no effect. This bit is also set if the interrupt is not enabled.

26.5.4 WWDG register map

The following table gives the WWDG register map and reset values.

Table 156. WWDG register map and reset values

Offset	Register name	31	30	29	28	27	26	25	24	23	22	21	20	19	18	17	16	15	14	13	12	11	10	9	8	7	6	5	4	3	2	1	0
0x000	WWDG_CR	Res.	Res.	Res.	Res.	Res.	Res.	Res.	Res.	Res.	Res.	Res.	Res.	Res.	Res.	Res.	Res.	Res.	Res.	Res.	Res.	Res.	Res.	Res.	Res.	WDGA	T[6:0]						
	Reset value																									0	1	1	1	1	1	1	1
0x004	WWDG_CFR	Res.	Res.	Res.	Res.	Res.	Res.	Res.	Res.	Res.	Res.	Res.	Res.	Res.	Res.	Res.	Res.	Res.	Res.	WDGTB [2:0]			Res.	EWI	Res.	Res.	W[6:0]						
	Reset value																			0	0	0		0			1	1	1	1	1	1	1
0x008	WWDG_SR	Res.	Res.	Res.	Res.	Res.	Res.	Res.	Res.	Res.	Res.	Res.	Res.	Res.	Res.	Res.	Res.	Res.	Res.	Res.	Res.	Res.	Res.	Res.	Res.	Res.	Res.	Res.	Res.	Res.	Res.	Res.	EWIF
	Reset value																																0

Refer to *Section 2.2: Memory organization* for the register boundary addresses.

27 Inter-integrated circuit interface (I2C)

27.1 Introduction

The I2C peripheral handles the interface between the device and the serial I²C (inter-integrated circuit) bus. It provides multicontroller capability, and controls all I²C-bus-specific sequencing, protocol, arbitration and timing. It supports Standard-mode (Sm), Fast-mode (Fm) and Fast-mode Plus (Fm+).

The I2C peripheral is also SMBus (system management bus) and PMBus® (power management bus) compatible.

It can use DMA to reduce the CPU load.

27.2 I2C main features

- I²C-bus specification rev03 compatibility:
  - Target and controller modes
  - Multicontroller capability
  - Standard-mode (up to 100 kHz)
  - Fast-mode (up to 400 kHz)
  - Fast-mode Plus (up to 1 MHz)
  - 7-bit and 10-bit addressing mode
  - Multiple 7-bit target addresses (2 addresses, 1 with configurable mask)
  - All 7-bit-addresses acknowledge mode
  - General call
  - Programmable setup and hold times
  - Easy-to-use event management
  - Clock stretching (optional)
- 1-byte buffer with DMA capability
- Programmable analog and digital noise filters
- SMBus specification rev 3.0 compatibility[(a)]:
  - Hardware PEC (packet error checking) generation and verification with ACK control
  - Command and data acknowledge control
  - Address resolution protocol (ARP) support
  - Host and device support
  - SMBus alert
  - Timeouts and idle condition detection
- PMBus rev 1.3 standard compatibility
- Independent clock

a. To check the compliance of the GPIOs selected for SMBus with the specified logical levels, refer to the product datasheet.

- Wake-up from Stop mode on address match

For information on I2C instantiation, refer to *Section 27.3: I2C implementation*.

27.3 I2C implementation

This section provides an implementation overview with respect to the I2C instantiation.

Table 157. I2C implementation

I2C features[1]	I2C1
7-bit addressing mode	X
10-bit addressing mode	X
Standard-mode (up to 100 kbit/s)	X
Fast-mode (up to 400 kbit/s)	X
Fast-mode Plus with 20 mA output drive I/Os (up to 1 Mbit/s)	X
Independent clock	X
Wake-up from Stop 0 / Stop 1 mode on address match	X
SMBus/PMBus	X

1. X = supported.

27.4 I2C functional description

In addition to receiving and transmitting data, the peripheral converts them from serial to parallel format and vice versa. The interrupts are enabled or disabled by software. The peripheral is connected to the I²C-bus through a data pin (SDA) and a clock pin (SCL). It supports Standard-mode (up to 100 kHz), Fast-mode (up to 400 kHz), and Fast-mode Plus (up to 1 MHz) I²C-bus.

The peripheral can also be connected to an SMBus, through the data pin (SDA), the clock pin (SCL), and an optional SMBus alert pin (SMBA).

The independent clock function allows the I2C communication speed to be independent of the PCLK1 frequency.

For I2C I/Os supporting 20 mA output current drive for Fast-mode Plus operation, the driving capability is enabled through control bits in the system configuration block(SYSCFG).

27.4.1 I2C block diagram

Figure 216. Block diagram

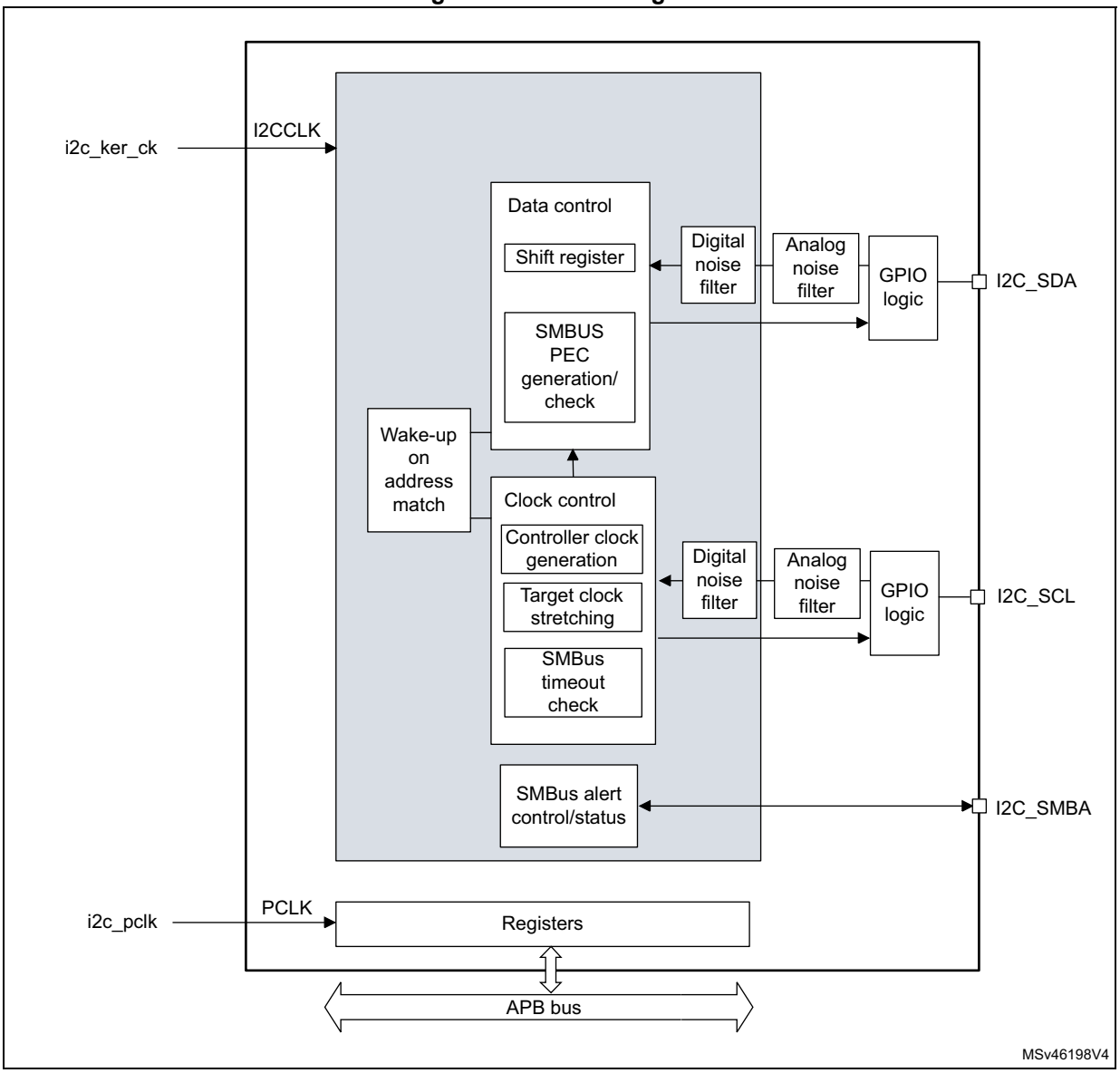

27.4.2 I2C pins and internal signals

Table 158. I2C input/output pins

Pin name	Signal type	Description
I2C_SDA	Bidirectional	I²C-bus data
I2C_SCL	Bidirectional	I²C-bus clock
I2C_SMBA	Bidirectional	SMBus alert

Table 159. I2C internal input/output signals

Internal signal name	Signal type	Description
i2c_ker_ck	Input	I2C kernel clock, also named I2CCLK in this document
i2c_pclk	Input	I2C APB clock
i2c_it	Output	I2C interrupts, refer to *Table 172* for the list of interrupt sources
i2c_rx_dma	Output	I2C receive data DMA request (I2C_RX)
i2c_tx_dma	Output	I2C transmit data DMA request (I2C_TX)

27.4.3 I2C clock requirements

The I2C kernel is clocked by I2CCLK.

The I2CCLK period t_{I2CCLK} must respect the following conditions:

$t_{I2CCLK} < (t_{LOW} - t_{filters}) / 4$

$t_{I2CCLK} < t_{HIGH}$

where t_{LOW} is the SCL low time, t_{HIGH} is the SCL high time, and $t_{filters}$ is the sum of the analog and digital filter delays (when enabled).

The digital filter delay is DNF[3:0] x t_{I2CCLK}.

The PCLK1 clock period t_{PCLK} must respect the condition $t_{PCLK} < 4/3\ t_{SCL}$, where t_{SCL} is the SCL period.

Caution: When the I2C kernel is clocked by PCLK1, this clock must respect the conditions for t_{I2CCLK}.

27.4.4 I2C mode selection

The peripheral can operate as:

- Target transmitter
- Target receiver
- Controller transmitter
- Controller receiver

By default, the peripheral operates in target mode. It automatically switches from target to controller mode upon generating START condition, and from controller to target mode upon arbitration loss or upon generating STOP condition. This allows the use of the I2C peripheral in a multicontroller I²C-bus environment.

Communication flow

In controller mode, the I2C peripheral initiates a data transfer and generates the clock signal. Serial data transfers always begin with a START condition and end with a STOP condition. Both START and STOP conditions are generated in controller mode by software.

In target mode, the peripheral recognizes its own 7-bit or 10-bit address, and the general call address. The general call address detection can be enabled or disabled by software. The reserved SMBus addresses can also be enabled by software.

Data and addresses are transferred as 8-bit bytes, MSB first. The address is contained in the first byte (7-bit addressing) or in the first two bytes (10-bit addressing) following the START condition. The address is always transmitted in controller mode.

The following figure shows the transmission of a single byte. The controller generates nine SCL pulses. The transmitter sends the eight data bits to the receiver with the SCL pulses 1 to 8. Then the receiver sends the acknowledge bit to the transmitter with the ninth SCL pulse.

Figure 217. I²C-bus protocol

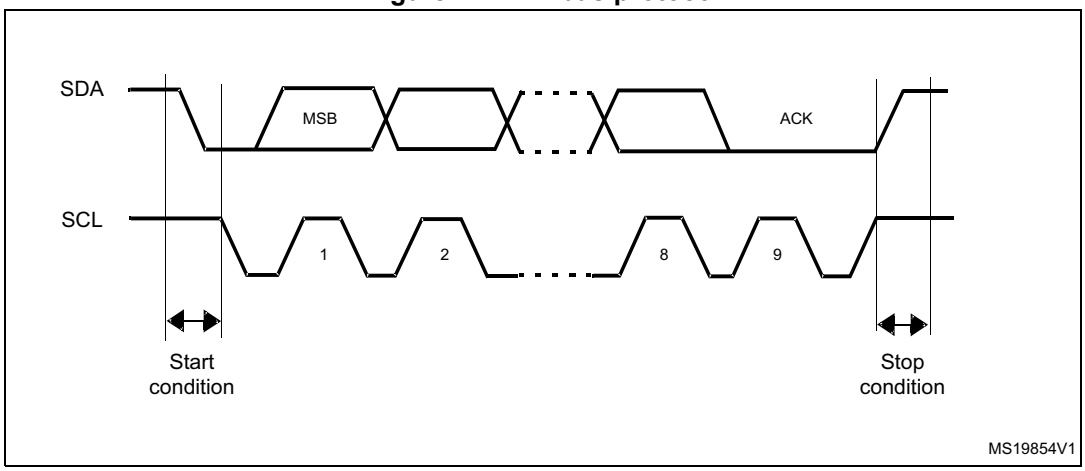

The acknowledge can be enabled or disabled by software. The own addresses of the I2C peripheral can be selected by software.

27.4.5 I2C initialization

Enabling and disabling the peripheral

Before enabling the I2C peripheral, configure and enable its clock through the RCC, and initialize its control registers.

The I2C peripheral can then be enabled by setting the PE bit of the I2C_CR1 register.

Disabling the I2C peripheral by clearing the PE bit resets the I2C peripheral. Refer to *Section 27.4.6* for more details.

Noise filters

Before enabling the I2C peripheral by setting the PE bit of the I2C_CR1 register, the user must configure the analog and/or digital noise filters, as required.

The analog noise filter on the SDA and SCL inputs complies with the I²C-bus specification which requires, in Fast-mode and Fast-mode Plus, the suppression of spikes shorter than 50 ns. Enabled by default, it can be disabled by setting the ANFOFF bit.

The digital filter is controlled through the DNF[3:0] bitfield of the I2C_CR1 register. When it is enabled, the internal SCL and SDA signals only take the level of their corresponding I²C-bus line when remaining stable for more than DNF[3:0] periods of I2CCLK. This allows suppressing spikes shorter than the filtering capacity period programmable from one to fifteen I2CCLK periods.

The following table compares the two filters.

Table 160. Comparison of analog and digital filters

Item	**Analog filter**	**Digital filter**
Filtering capacity(1)	≥ 50 ns	One to fifteen I2CCLK periods
Benefits	Available in Stop mode	– Programmable filtering capacity – Extra filtering capability versus I²C-bus specification requirements – Stable filtering capacity
Drawbacks	Filtering capacity variation with temperature, voltage, and silicon process	Wake-up from Stop mode on address match not supported when the digital filter is enabled

1. Maximum duration of spikes that the filter can suppress

Caution: The filter configuration cannot be changed when the I2C peripheral is enabled.

I2C timings

To ensure correct data hold and setup times, the corresponding timings must be configured through the PRESC[3:0], SCLDEL[3:0], and SDADEL[3:0] bitfields of the I2C_TIMINGR register.

The STM32CubeMX tool calculates and provides the I2C_TIMINGR content in the *I2C configuration* window.

Figure 218. Setup and hold timings

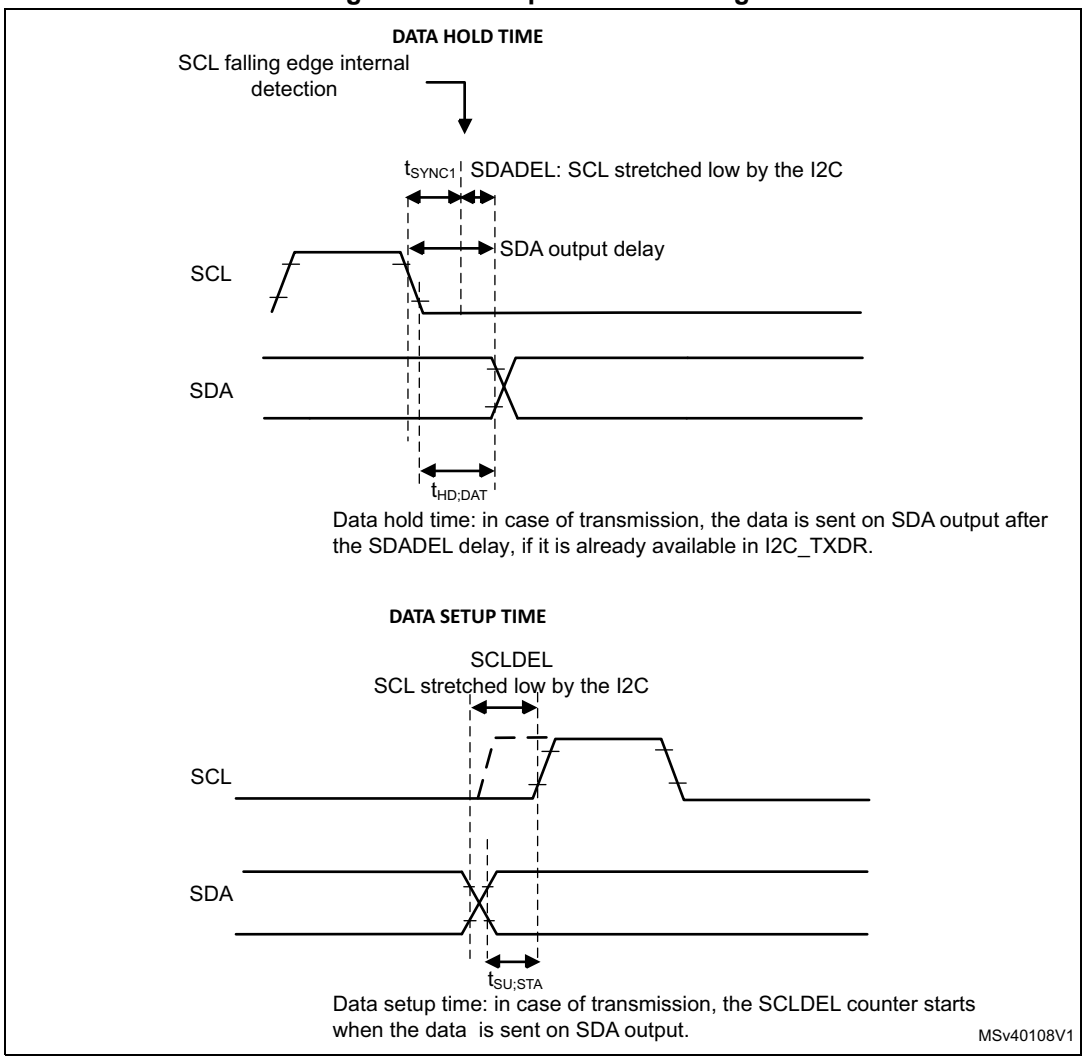

When the SCL falling edge is internally detected, the delay t_{SDADEL} (impacting the hold time $t_{HD;DAT}$) is inserted before sending SDA output:

t_{SDADEL} = SDADEL x t_{PRESC} + t_{I2CCLK}, where t_{PRESC} = (PRESC + 1) x t_{I2CCLK}.

The total SDA output delay is:

t_{SYNC1} + {[SDADEL x (PRESC + 1) + 1] x t_{I2CCLK}}

The t_{SYNC1} duration depends upon:

- SCL falling slope
- input delay $t_{AF(min)} < t_{AF} < t_{AF(max)}$ introduced by the analog filter (if enabled)
- input delay t_{DNF} = DNF x t_{I2CCLK} introduced by the digital filter (if enabled)
- delay due to SCL synchronization to I2CCLK clock (two to three I2CCLK periods)

To bridge the undefined region of the SCL falling edge, the user must set SDADEL[3:0] so as to fulfill the following condition:

{$t_{f(max)}$ + $t_{HD;DAT(min)}$ - $t_{AF(min)}$ - [(DNF + 3) x t_{I2CCLK}]} / {(PRESC + 1) x t_{I2CCLK}} ≤ SDADEL

SDADEL ≤ {$t_{HD;DAT\ (max)}$ - $t_{AF(max)}$ - [(DNF + 4) x t_{I2CCLK}]} / {(PRESC + 1) x t_{I2CCLK}}

Note: $t_{AF(min)}$ and $t_{AF(max)}$ are only part of the condition when the analog filter is enabled. Refer to the device datasheet for t_{AF} values.

The $t_{HD;DAT}$ time can at maximum be 3.45 µs for Standard-mode, 0.9 µs for Fast-mode, and 0.45 µs for Fast-mode Plus. It must be lower than the maximum of $t_{VD;DAT}$ by a transition time. This maximum must only be met if the device does not stretch the LOW period (t_{LOW}) of the SCL signal. When it stretches SCL, the data must be valid by the set-up time before it releases the clock.

The SDA rising edge is usually the worst case. The previous condition then becomes:

$$SDADEL \leq \{t_{VD;DAT\ (max)} - t_{r\ (max)} - t_{AF\ (max)} - [(DNF + 4) \times t_{I2CCLK}]\} / \{(PRESC + 1) \times t_{I2CCLK}\}$$

Note: This condition can be violated when NOSTRETCH = 0, because the device stretches SCL low to guarantee the set-up time, according to the SCLDEL[3:0] value.

After t_{SDADEL}, or after sending SDA output when the target had to stretch the clock because the data was not yet written in I2C_TXDR register, the SCL line is kept at low level during the setup time. This setup time is $t_{SCLDEL} = (SCLDEL + 1) \times t_{PRESC}$, where $t_{PRESC} = (PRESC + 1) \times t_{I2CCLK}$. t_{SCLDEL} impacts the setup time $t_{SU;DAT}$.

To bridge the undefined region of the SDA transition (rising edge usually worst case), the user must program SCLDEL[3:0] so as to fulfill the following condition:

$$\{[t_{r\ (max)} + t_{SU;DAT\ (min)}] / [(PRESC + 1) \times t_{I2CCLK}]\} - 1 \leq SCLDEL$$

Refer to the following table for t_f, t_r, $t_{HD;DAT}$, $t_{VD;DAT}$, and $t_{SU;DAT}$ standard values.

Use the SDA and SCL real transition time values measured in the application to widen the scope of allowed SDADEL[3:0] and SCLDEL[3:0] values. Use the maximum SDA and SCL transition time values defined in the standard to make the device work reliably regardless of the application.

Note: At every clock pulse, after SCL falling edge detection, I2C operating as controller or target stretches SCL low during at least $[(SDADEL + SCLDEL + 1) \times (PRESC + 1) + 1] \times t_{I2CCLK}$, in both transmission and reception modes. In transmission mode, if the data is not yet written in I2C_TXDR when SDA delay elapses, the I2C peripheral keeps stretching SCL low until the next data is written. Then new data MSB is sent on SDA output, and SCLDEL counter starts, continuing stretching SCL low to guarantee the data setup time.

When the NOSTRETCH bit is set in target mode, the SCL is not stretched. The SDADEL[3:0] must then be programmed so that it ensures a sufficient setup time.

Table 161. I²C-bus and SMBus specification data setup and hold times

Symbol	Parameter	Standard-mode (Sm)		Fast-mode (Fm)		Fast-mode Plus (Fm+)		SMBus		Unit
		Min	Max	Min	Max	Min	Max	Min	Max	
$t_{HD;DAT}$	Data hold time	0	-	0	-	0	-	0.3	-	µs
$t_{VD;DAT}$	Data valid time	-	3.45	-	0.9	-	0.45	-	-	
$t_{SU;DAT}$	Data setup time	250	-	100	-	50	-	250	-	ns
t_r	Rise time of both SDA and SCL signals	-	1000	-	300	-	120	-	1000	
t_f	Fall time of both SDA and SCL signals	-	300	-	300	-	120	-	300	

Additionally, in controller mode, the SCL clock high and low levels must be configured by programming the PRESC[3:0], SCLH[7:0], and SCLL[7:0] bitfields of the I2C_TIMINGR register.

When the SCL falling edge is internally detected, the I2C peripheral releasing the SCL output after the delay t_{SCLL} = (SCLL + 1) x t_{PRESC}, where t_{PRESC} = (PRESC + 1) x t_{I2CCLK}. The t_{SCLL} delay impacts the SCL low time t_{LOW}.

When the SCL rising edge is internally detected, the I2C peripheral forces the SCL output to low level after the delay t_{SCLH} = (SCLH + 1) x t_{PRESC}, where t_{PRESC} = (PRESC + 1) x t_{I2CCLK}. The t_{SCLH} impacts the SCL high time t_{HIGH}.

Refer to *I2C controller initialization* for more details.

Caution: Changing the timing configuration and the NOSTRETCH configuration is not allowed when the I2C peripheral is enabled. Like the timing settings, the target NOSTRETCH settings must also be done before enabling the peripheral. Refer to *I2C target initialization* for more details.

Figure 219. I2C initialization flow

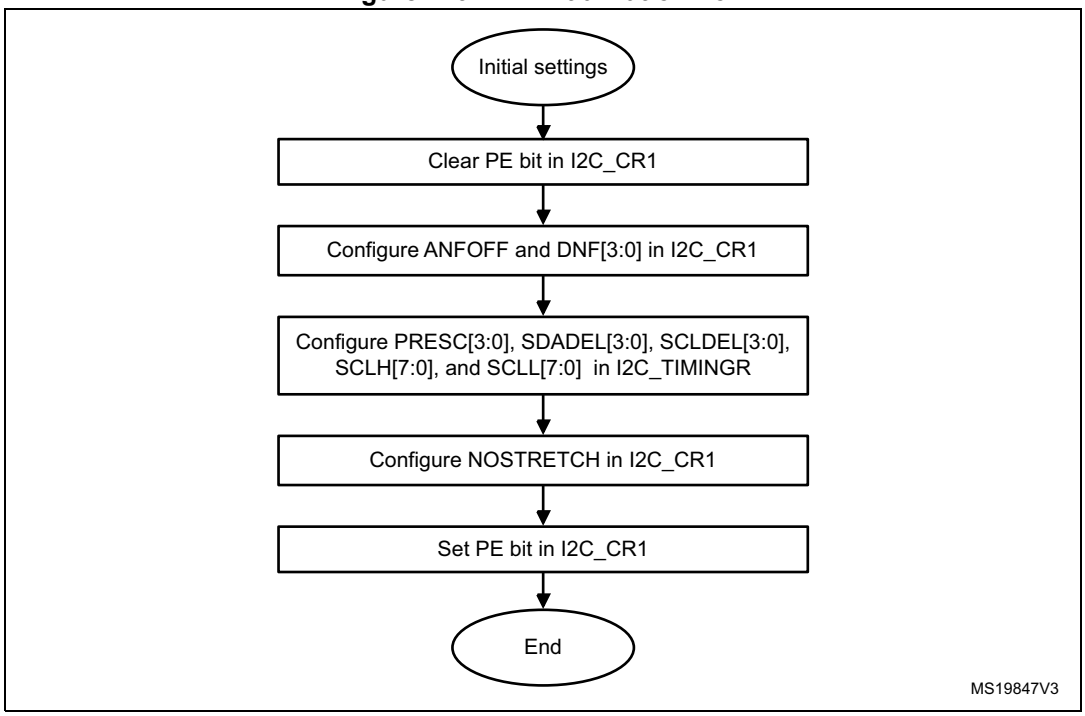

27.4.6 I2C reset

The reset of the I2C peripheral is performed by clearing the PE bit of the I2C_CR1 register. It has the effect of releasing the SCL and SDA lines. Internal state machines are reset and the communication control bits and the status bits revert to their reset values. This reset does not impact the configuration registers.

The impacted register bits are:

1. I2C_CR2 register: START, STOP, PECBYTE, and NACK
2. I2C_ISR register: BUSY, TXE, TXIS, RXNE, ADDR, NACKF, TCR, TC, STOPF, BERR, ARLO, PECERR, TIMEOUT, ALERT, and OVR

PE must be kept low during at least three APB clock cycles to perform the I2C reset. To ensure this, perform the following software sequence:

1. Write PE = 0
2. Check PE = 0
3. Write PE = 1

27.4.7 I2C data transfer

The data transfer is managed through transmit and receive data registers and a shift register.

Reception

The SDA input fills the shift register. After the eighth SCL pulse (when the complete data byte is received), the shift register is copied into the I2C_RXDR register if it is empty (RXNE = 0). If RXNE = 1, which means that the previous received data byte has not yet been read, the SCL line is stretched low until I2C_RXDR is read. The stretch occurs between the eighth and the ninth SCL pulse (before the acknowledge pulse).

Figure 220. Data reception

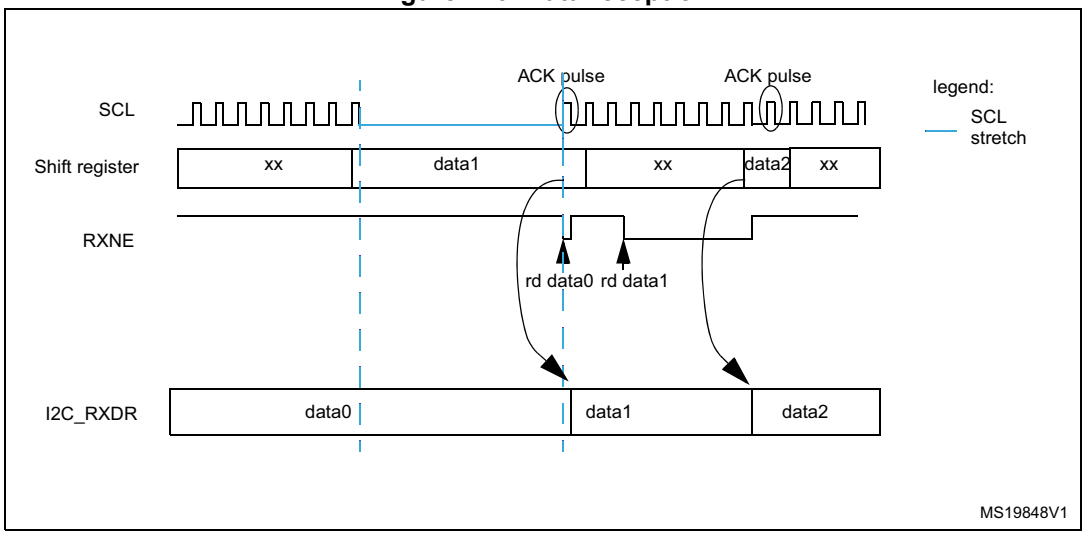

Transmission

If the I2C_TXDR register is not empty (TXE = 0), its content is copied into the shift register after the ninth SCL pulse (the acknowledge pulse). Then the shift register content is shifted out on the SDA line. If TXE = 1, which means that no data is written yet in I2C_TXDR, the SCL line is stretched low until I2C_TXDR is written. The stretch starts after the ninth SCL pulse.

Figure 221. Data transmission

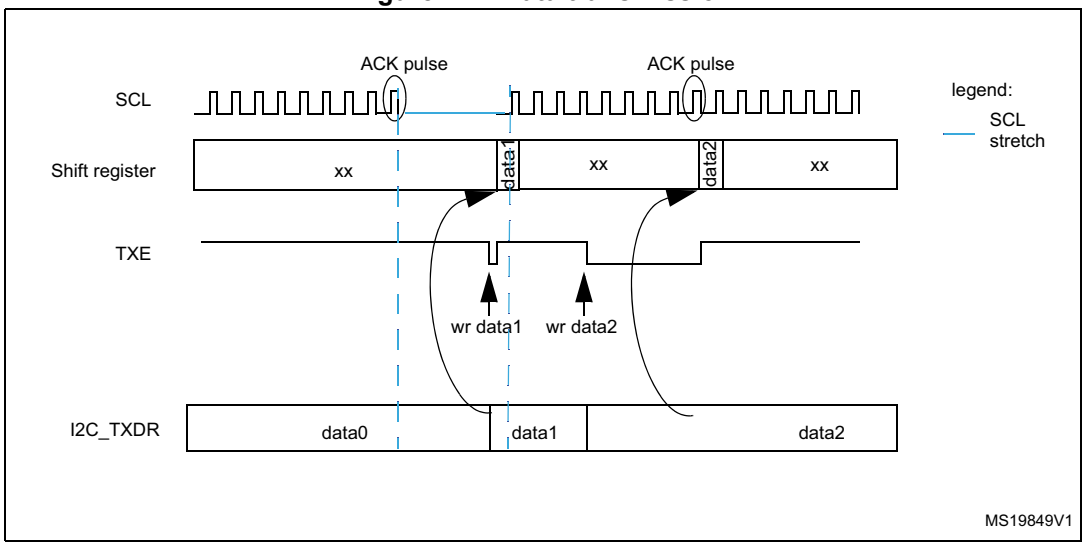

Hardware transfer management

The I2C features an embedded byte counter to manage byte transfer and to close the communication in various modes, such as:

- NACK, STOP and ReSTART generation in controller mode
- ACK control in target receiver mode
- PEC generation/checking

In controller mode, the byte counter is always used. By default, it is disabled in target mode. It can be enabled by software, by setting the SBC (target byte control) bit of the I2C_CR1 register.

The number of bytes to transfer is programmed in the NBYTES[7:0] bitfield of the I2C_CR2 register. If this number is greater than 255, or if a receiver wants to control the acknowledge value of a received data byte, the reload mode must be selected, by setting the RELOAD bit of the I2C_CR2 register. In this mode, the TCR flag is set when the number of bytes programmed in NBYTES[7:0] is transferred (when the associated counter reaches zero), and an interrupt is generated if TCIE is set. SCL is stretched as long as the TCR flag is set. TCR is cleared by software when NBYTES[7:0] is written to a non-zero value.

When NBYTES[7:0] is reloaded with the last number of bytes to transfer, the RELOAD bit must be cleared.

When RELOAD = 0 in controller mode, the counter can be used in two modes:

- **Automatic end** (AUTOEND = 1 in the I2C_CR2 register). In this mode, the controller automatically sends a STOP condition once the number of bytes programmed in the NBYTES[7:0] bitfield is transferred.
- **Software end** (AUTOEND = 0 in the I2C_CR2 register). In this mode, a software action is expected once the number of bytes programmed in the NBYTES[7:0] bitfield is transferred; the TC flag is set and an interrupt is generated if the TCIE bit is set. The SCL signal is stretched as long as the TC flag is set. The TC flag is cleared by software when the START or STOP bit of the I2C_CR2 register is set. This mode must be used when the controller wants to send a RESTART condition.

Caution: The AUTOEND bit has no effect when the RELOAD bit is set.

Table 162. I2C configuration

Function	SBC bit	RELOAD bit	AUTOEND bit
Controller Tx/Rx NBYTES + STOP	X	0	1
Controller Tx/Rx + NBYTES + RESTART	X	0	0
Target Tx/Rx, all received bytes ACKed	0	X	X
Target Rx with ACK control	1	1	X

27.4.8 I2C target mode

I2C target initialization

To work in target mode, the user must enable at least one target address. The I2C_OAR1 and I2C_OAR2 registers are available to program the target own addresses OA1 and OA2, respectively.

OA1 can be configured either in 7-bit (default) or in 10-bit addressing mode, by setting the OA1MODE bit of the I2C_OAR1 register.

OA1 is enabled by setting the OA1EN bit of the I2C_OAR1 register.

If an additional target addresses are required, the second target address OA2 can be configured. Up to seven OA2 LSBs can be masked, by configuring the OA2MSK[2:0] bitfield of the I2C_OAR2 register. Therefore, for OA2MSK[2:0] configured from 1 to 6, only OA2[7:2], OA2[7:3], OA2[7:4], OA2[7:5], OA2[7:6], or OA2[7] are compared with the received address. When OA2MSK[2:0] is other than 0, the address comparator for OA2 excludes the I2C reserved addresses (0000 XXX and 1111 XXX) and they are not acknowledged. If OA2MSK[2:0] = 7, all received 7-bit addresses are acknowledged (except reserved addresses). OA2 is always a 7-bit address.

When enabled through the specific bit, the reserved addresses can be acknowledged if they are programmed in the I2C_OAR1 or I2C_OAR2 register with OA2MSK[2:0] = 0.

OA2 is enabled by setting the OA2EN bit of the I2C_OAR2 register.

The general call address is enabled by setting the GCEN bit of the I2C_CR1 register.

When the I2C peripheral is selected by one of its enabled addresses, the ADDR interrupt status flag is set, and an interrupt is generated if the ADDRIE bit is set.

By default, the target uses its clock stretching capability, which means that it stretches the SCL signal at low level when required, to perform software actions. If the controller does not

support clock stretching, I2C must be configured with NOSTRETCH = 1 in the I2C_CR1 register.

After receiving an ADDR interrupt, if several addresses are enabled, the user must read the ADDCODE[6:0] bitfield of the I2C_ISR register to check which address matched. The DIR flag must also be checked to know the transfer direction.

Target with clock stretching

As long as the NOSTRETCH bit of the I2C_CR1 register is zero (default), the I2C peripheral operating as an I²C-bus target stretches the SCL signal in the following situations:

- The ADDR flag is set and the received address matches with one of the enabled target addresses.
  The stretch is released when the software clears the ADDR flag by setting the ADDRCF bit.
- In transmission, the previous data transmission is completed and no new data is written in I2C_TXDR register, or the first data byte is not written when the ADDR flag is cleared (TXE = 1).
  The stretch is released when the data is written to the I2C_TXDR register.
- In reception, the I2C_RXDR register is not read yet and a new data reception is completed.
  The stretch is released when I2C_RXDR is read.
- In target byte control mode (SBC bit set) with reload (RELOAD bit set), the last data byte transfer is finished (TCR bit set).
  The stretch is released when then TCR is cleared by writing a non-zero value in the NBYTES[7:0] bitfield.
- After SCL falling edge detection.
  The stretch is released after [(SDADEL + SCLDEL + 1) x (PRESC+ 1) + 1] x t_{I2CCLK} period.

Target without clock stretching

As long as the NOSTRETCH bit of the I2C_CR1 register is set, the I2C peripheral operating as an I²C-bus target does not stretch the SCL signal.

The SCL clock is not stretched while the ADDR flag is set.

In transmission, the data must be written in the I2C_TXDR register before the first SCL pulse corresponding to its transfer occurs. If not, an underrun occurs, the OVR flag is set in the I2C_ISR register and an interrupt is generated if the ERRIE bit of the I2C_CR1 register is set. The OVR flag is also set when the first data transmission starts and the STOPF bit is still set (has not been cleared). Therefore, if the user clears the STOPF flag of the previous transfer only after writing the first data to be transmitted in the next transfer, it ensures that the OVR status is provided, even for the first data to be transmitted.

In reception, the data must be read from the I2C_RXDR register before the ninth SCL pulse (ACK pulse) of the next data byte occurs. If not, an overrun occurs, the OVR flag is set in the I2C_ISR register, and an interrupt is generated if the ERRIE bit of the I2C_CR1 register is set.

Target byte control mode

To allow byte ACK control in target reception mode, the target byte control mode must be enabled, by setting the SBC bit of the I2C_CR1 register. This is required to comply with SMBus standards.

The reload mode must be selected to allow byte ACK control in target reception mode (RELOAD = 1). To get control of each byte, NBYTES[7:0] must be initialized to 0x1 in the ADDR interrupt subroutine, and reloaded to 0x1 after each received byte. When the byte is received, the TCR bit is set, stretching the SCL signal low between the eighth and the ninth SCL pulse. The user can read the data from the I2C_RXDR register, and then decide to acknowledge it or not by configuring the ACK bit of the I2C_CR2 register. The SCL stretch is released by programming NBYTES to a non-zero value: the acknowledge or not-acknowledge is sent and the next byte can be received.

NBYTES[7:0] can be loaded with a value greater than 0x1. Receiving then continues until the corresponding number of bytes are received.

Note: The SBC bit must be configured when the I2C peripheral is disabled, when the target is not addressed, or when ADDR = 1.

The RELOAD bit value can be changed when ADDR = 1, or when TCR = 1.

Caution: The target byte control mode is not compatible with NOSTRETCH mode. Setting SBC when NOSTRETCH = 1 is not allowed.

Figure 222. Target initialization flow

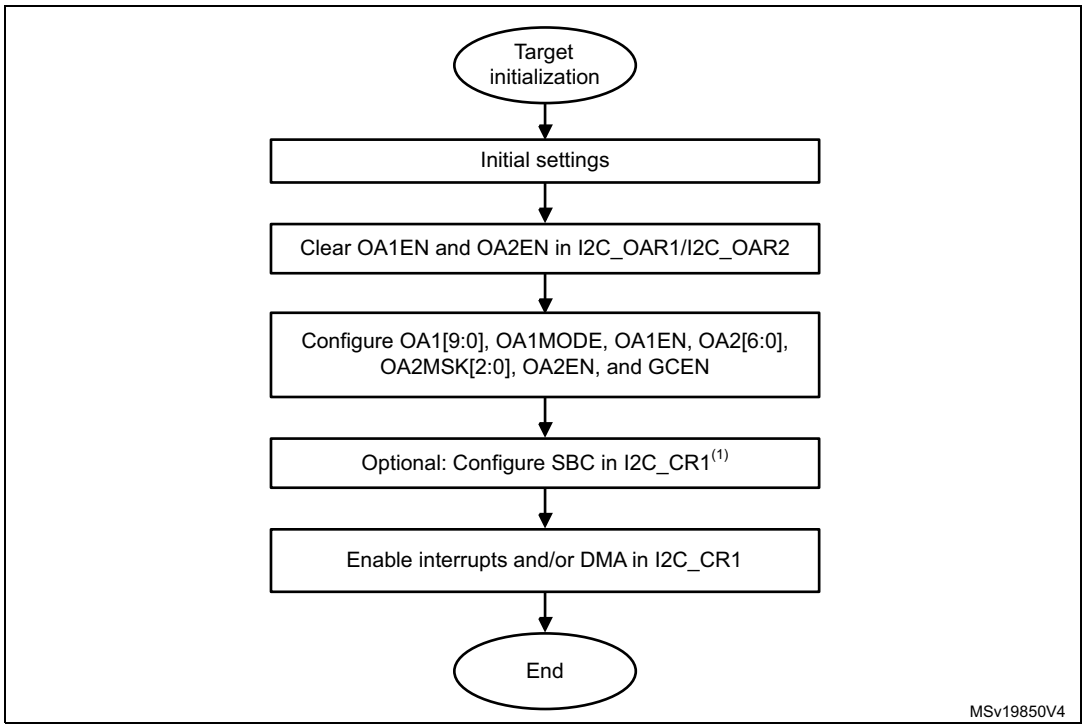

1. SBC must be set to support SMBus features.

Target transmitter

A transmit interrupt status (TXIS) flag is generated when the I2C_TXDR register becomes empty. An interrupt is generated if the TXIE bit of the I2C_CR1 register is set.

The TXIS flag is cleared when the I2C_TXDR register is written with the next data byte to transmit.

When NACK is received, the NACKF flag is set in the I2C_ISR register and an interrupt is generated if the NACKIE bit of the I2C_CR1 register is set. The target automatically releases the SCL and SDA lines to let the controller perform a STOP or a RESTART condition. The TXIS bit is not set when a NACK is received.

When STOP is received and the STOPIE bit of the I2C_CR1 register is set, the STOPF flag of the I2C_ISR register is set and an interrupt is generated. In most applications, the SBC bit is usually programmed to 0. In this case, if TXE = 0 when the target address is received (ADDR = 1), the user can choose either to send the content of the I2C_TXDR register as the first data byte, or to flush the I2C_TXDR register, by setting the TXE bit in order to program a new data byte.

In target byte control mode (SBC = 1), the number of bytes to transmit must be programmed in NBYTES[7:0] in the address match interrupt subroutine (ADDR = 1). In this case, the number of TXIS events during the transfer corresponds to the value programmed in NBYTES[7:0].

Caution: When NOSTRETCH = 1, the SCL clock is not stretched while the ADDR flag is set, so the user cannot flush the I2C_TXDR register content in the ADDR subroutine to program the first data byte. The first data byte to send must be previously programmed in the I2C_TXDR register:

- This data can be the one written in the last TXIS event of the previous transmission message.
- If this data byte is not the one to send, the I2C_TXDR register can be flushed, by setting the TXE bit, to program a new data byte. The STOPF bit must be cleared only after these actions. This guarantees that they are executed before the first data transmission starts, following the address acknowledge.

  If STOPF is still set when the first data transmission starts, an underrun error is generated (the OVR flag is set).

  If a TXIS event (transmit interrupt or transmit DMA request) is required, the user must set the TXIS bit in addition to the TXE bit, to generate the event.

Figure 223. Transfer sequence flow for I2C target transmitter, NOSTRETCH = 0

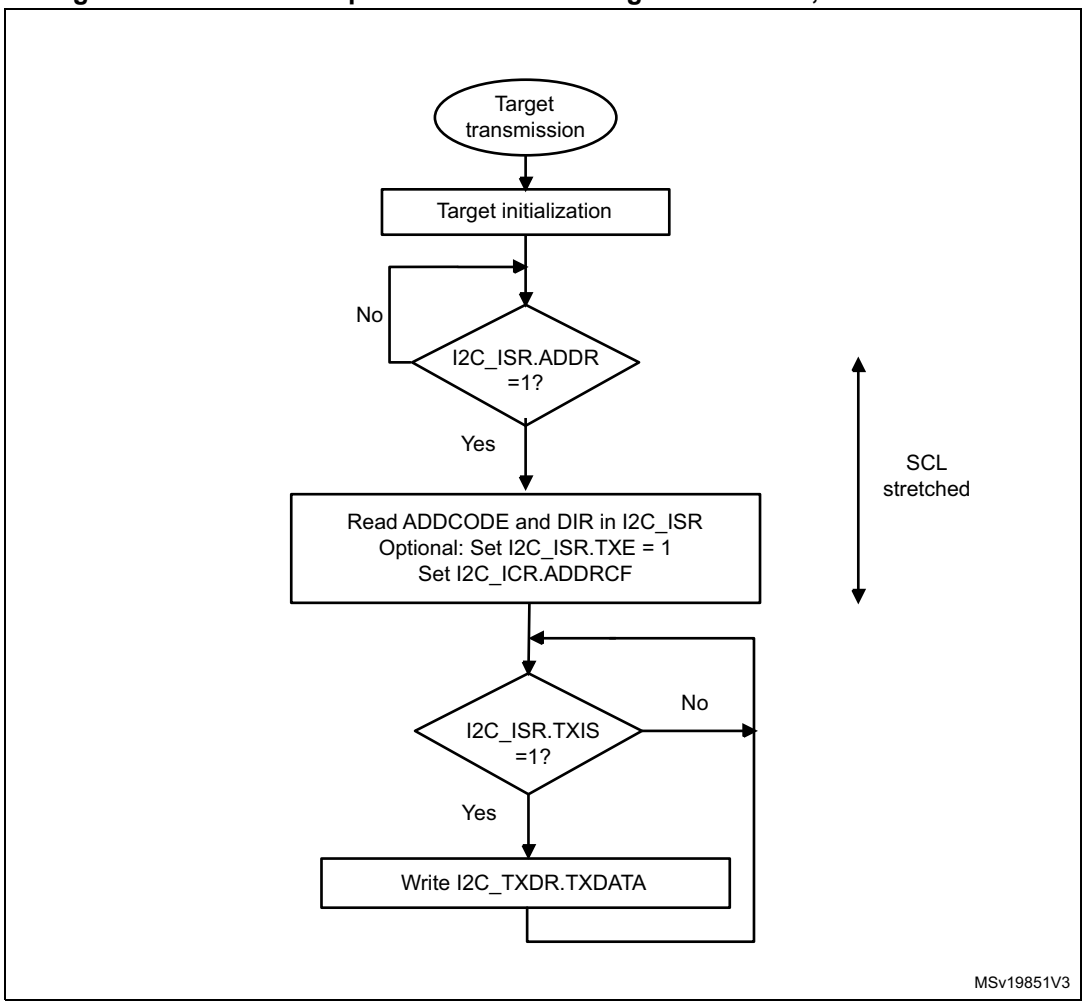

Figure 224. Transfer sequence flow for I2C target transmitter, NOSTRETCH = 1

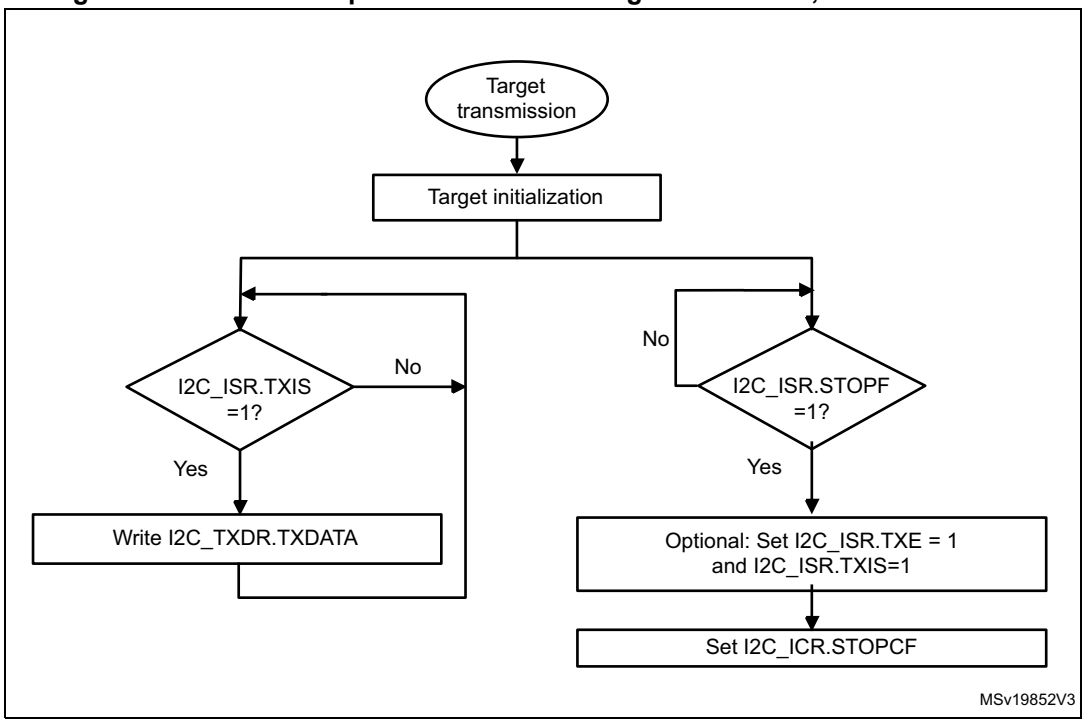

Figure 225. Transfer bus diagrams for I2C target transmitter (mandatory events only)

Example I2C target transmitter 3 bytes with 1st data flushed, NOSTRETCH=0:

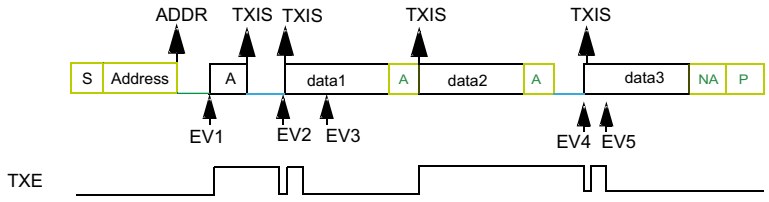

legend:
transmission
reception
SCL stretch

EV1: ADDR ISR: check ADDCODE and DIR, set TXE, set ADDRCF
EV2: TXIS ISR: wr data1
EV3: TXIS ISR: wr data2
EV4: TXIS ISR: wr data3
EV5: TXIS ISR: wr data4 (not sent)

Example I2C target transmitter 3 bytes without 1st data flush, NOSTRETCH=0:

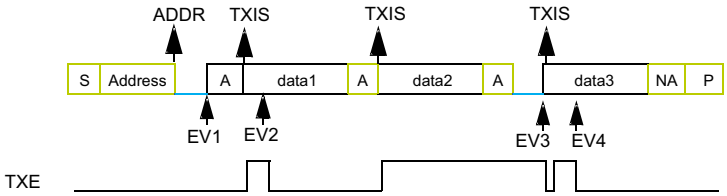

legend :
transmission
reception
SCL stretch

EV1: ADDR ISR: check ADDCODE and DIR, set ADDRCF
EV2: TXIS ISR: wr data2
EV3: TXIS ISR: wr data3
EV4: TXIS ISR: wr data4 (not sent)

Example I2C target transmitter 3 bytes, NOSTRETCH=1:

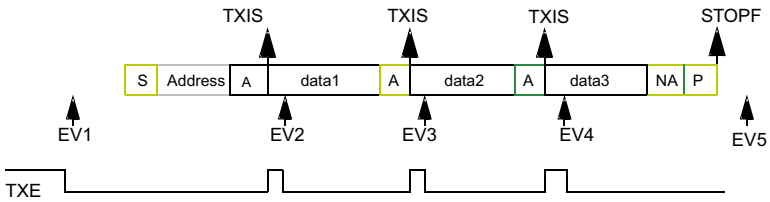

legend:
transmission
reception
SCL stretch

EV1: wr data1
EV2: TXIS ISR: wr data2
EV3: TXIS ISR: wr data3
EV4: TXIS ISR: wr data4 (not sent)
EV5: STOPF ISR: (optional: set TXE and TXIS), set STOPCF

MSv19853V3

Target receiver

The RXNE bit of the I2C_ISR register is set when the I2C_RXDR is full, which generates an interrupt if the RXIE bit of the I2C_CR1 register is set. RXNE is cleared when I2C_RXDR is read.

When STOP condition is received and the STOPIE bit of the I2C_CR1 register is set, the STOPF flag in the I2C_ISR register is set and an interrupt is generated.

Figure 226. Transfer sequence flow for I2C target receiver, NOSTRETCH = 0

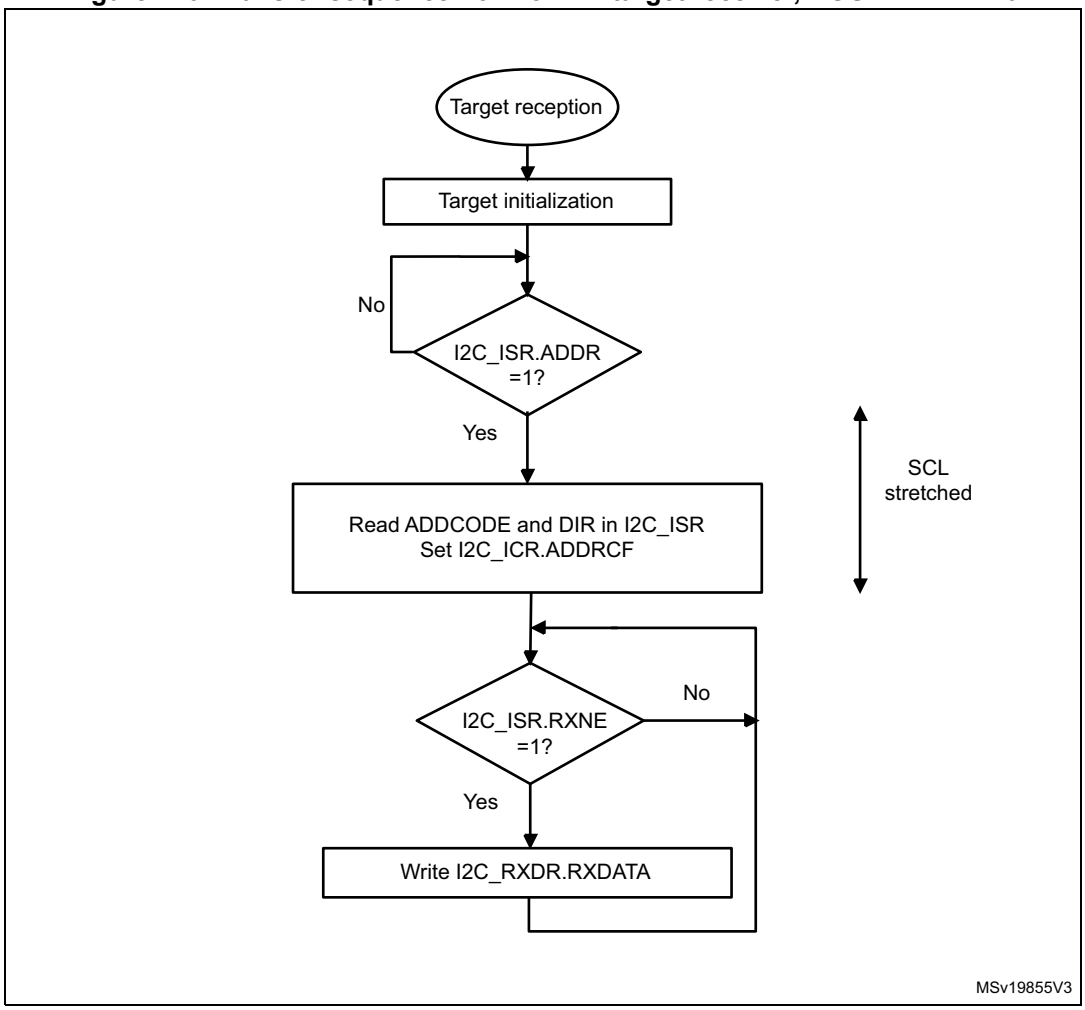

Figure 227. Transfer sequence flow for I2C target receiver, NOSTRETCH = 1

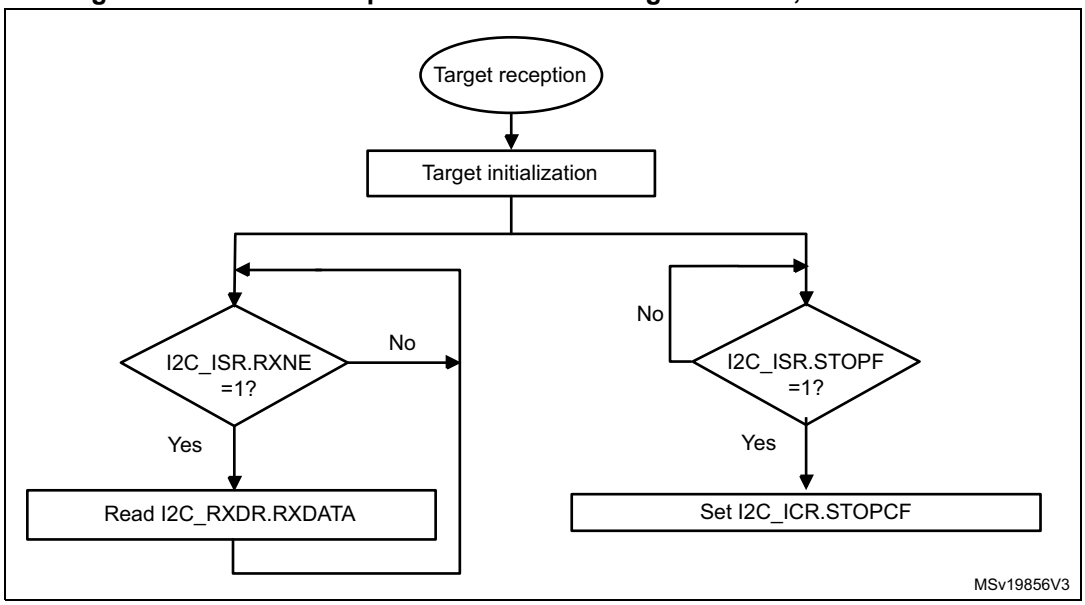

Figure 228. Transfer bus diagrams for I2C target receiver (mandatory events only)

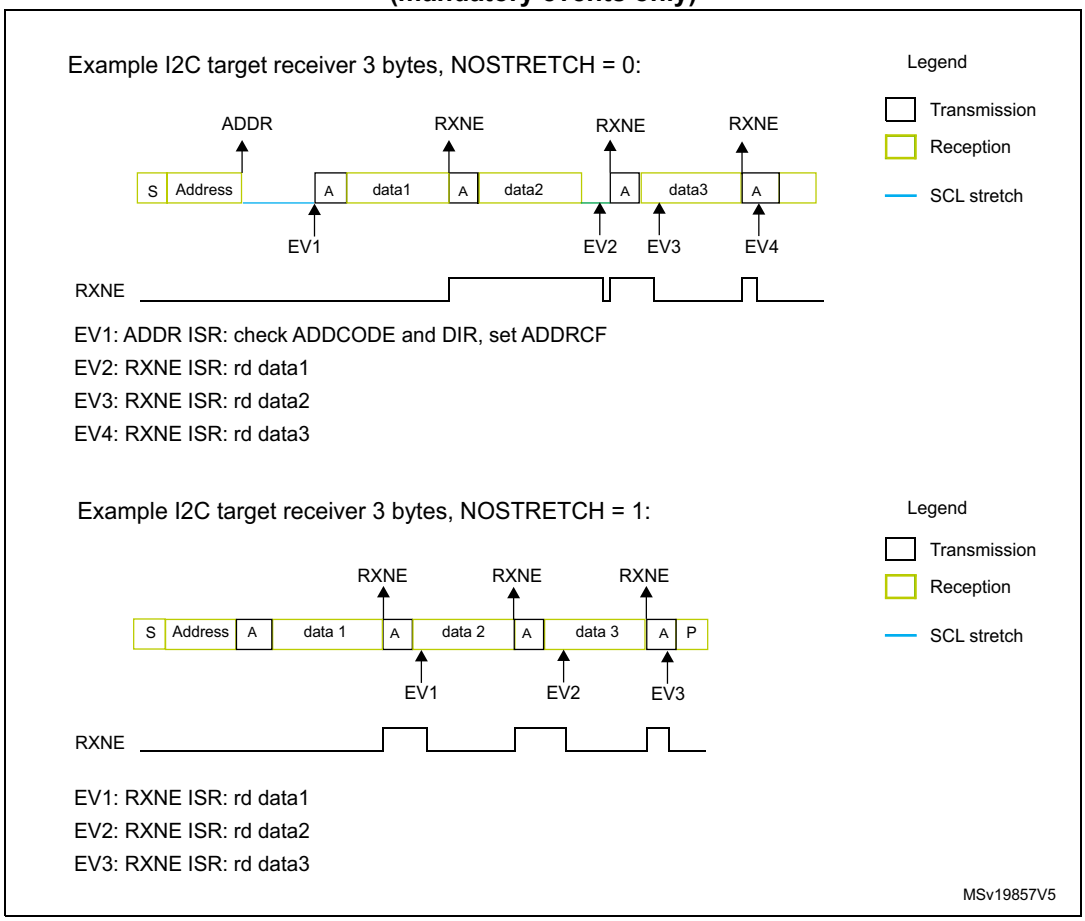

27.4.9 I2C controller mode

I2C controller initialization

Before enabling the peripheral, the I2C controller clock must be configured, by setting the SCLH and SCLL bits in the I2C_TIMINGR register.

The STM32CubeMX tool calculates and provides the I2C_TIMINGR content in the *I2C Configuration* window.

A clock synchronization mechanism is implemented in order to support multicontroller environment and target clock stretching.

In order to allow clock synchronization:

- The low level of the clock is counted using the SCLL counter, starting from the SCL low level internal detection.
- The high level of the clock is counted using the SCLH counter, starting from the SCL high level internal detection.

I2C detects its own SCL low level after a t_{SYNC1} delay depending on the SCL falling edge, SCL input noise filters (analog and digital), and SCL synchronization to the I2CxCLK clock. I2C releases SCL to high level once the SCLL counter reaches the value programmed in the SCLL[7:0] bitfield of the I2C_TIMINGR register.

I2C detects its own SCL high level after a t_{SYNC2} delay depending on the SCL rising edge, SCL input noise filters (analog and digital), and SCL synchronization to the I2CxCLK clock. I2C ties SCL to low level once the SCLH counter reaches the value programmed in the SCLH[7:0] bitfield of the I2C_TIMINGR register.

Consequently the controller clock period is:

$t_{SCL} = t_{SYNC1} + t_{SYNC2} + \{[(SCLH+ 1) + (SCLL+ 1)] \times (PRESC+ 1) \times t_{I2CCLK}\}$

The duration of t_{SYNC1} depends upon:

- SCL falling slope
- input delay induced by the analog filter (when enabled)
- input delay induced by the digital filter (when enabled): DNF[3:0] x t_{I2CCLK}
- delay due to SCL synchronization with the I2CCLK clock (two to three I2CCLK periods)

The duration of t_{SYNC2} depends upon:

- SCL rising slope
- input delay induced by the analog filter (when enabled)
- input delay induced by the digital filter (when enabled): DNF[3:0] x t_{I2CCLK}
- delay due to SCL synchronization with the I2CCLK clock (two to three I2CCLK periods)

Figure 229. Controller clock generation

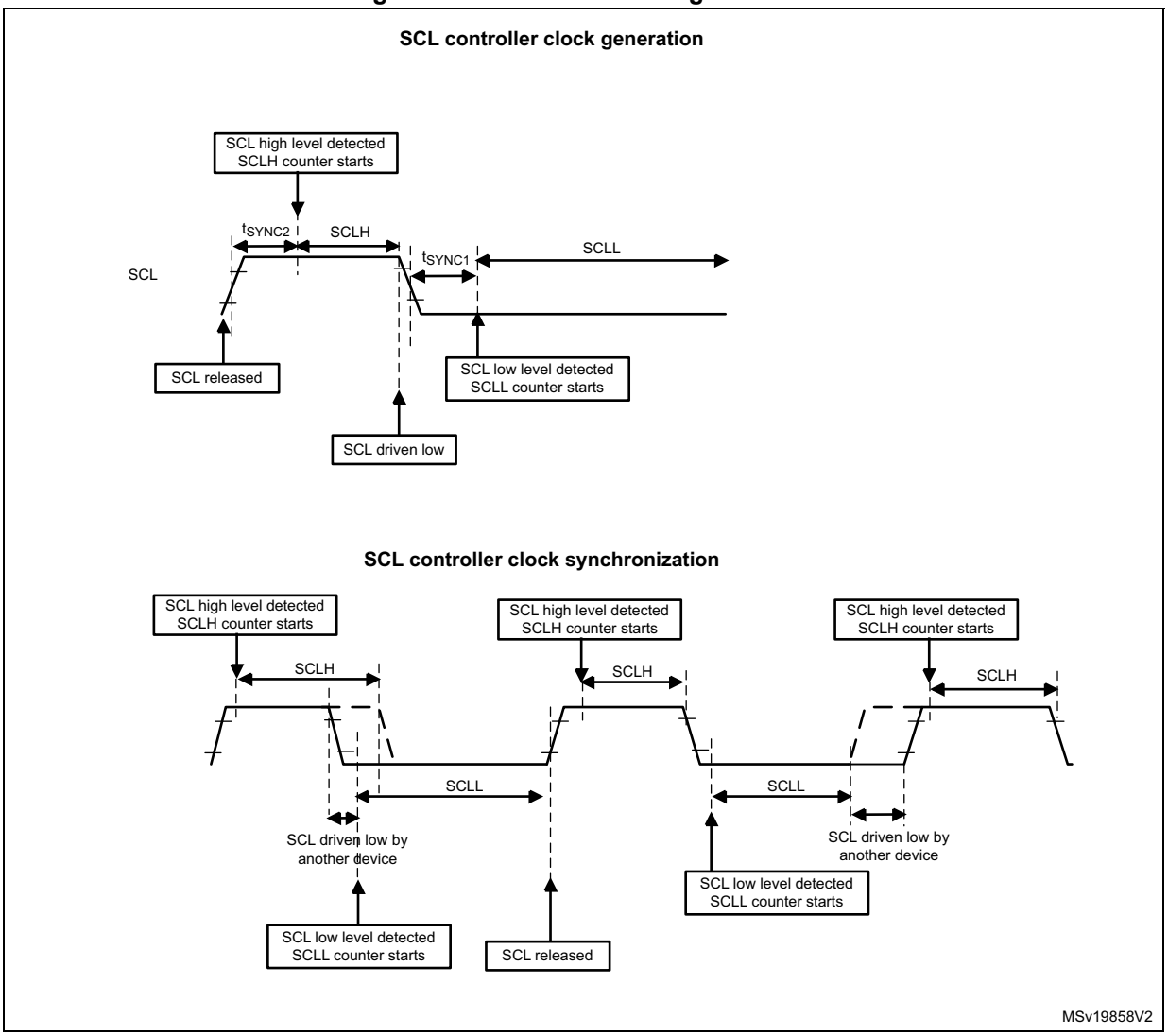

Caution: For compliance with the I²C-bus or SMBus specification, the controller clock must respect the timings in the following table.

Table 163. I²C-bus and SMBus specification clock timings

Symbol	Parameter	Standard-mode (Sm)		Fast-mode (Fm)		Fast-mode Plus (Fm+)		SMBus		Unit
		Min	Max	Min	Max	Min	Max	Min	Max	
f_{SCL}	SCL clock frequency	-	100	-	400	-	1000	-	100	kHz
$t_{HD:STA}$	Hold time (repeated) START condition	4.0	-	0.6	-	0.26	-	4.0	-	µs
$t_{SU:STA}$	Set-up time for a repeated START condition	4.7	-	0.6	-	0.26	-	4.7	-	
$t_{SU:STO}$	Set-up time for STOP condition	4.0	-	0.6	-	0.26	-	4.0	-	
t_{BUF}	Bus free time between a STOP and START condition	4.7	-	1.3	-	0.5	-	4.7	-	
t_{LOW}	Low period of the SCL clock	4.7	-	1.3	-	0.5	-	4.7	-	
t_{HIGH}	High period of the SCL clock	4.0	-	0.6	-	0.26	-	4.0	50	
t_r	Rise time of both SDA and SCL signals	-	1000	-	300	-	120	-	1000	ns
t_f	Fall time of both SDA and SCL signals	-	300	-	300	-	120	-	300	

Note: The SCLL[7:0] bitfield also determines the t_{BUF} and $t_{SU:STA}$ timings and SCLH[7:0] the $t_{HD:STA}$ and $t_{SU:STO}$ timings.

Refer to *Section 27.4.10* for examples of I2C_TIMINGR settings versus the I2CCLK frequency.

Controller communication initialization (address phase)

To initiate the communication with a target to address, set the following bitfields of the I2C_CR2 register:

- ADD10: addressing mode (7-bit or 10-bit)
- SADD[9:0]: target address to send
- RD_WRN: transfer direction
- HEAD10R: in case of 10-bit address read, this bit determines whether the header only (for direction change) or the complete address sequence is sent.
- NBYTES[7:0]: the number of bytes to transfer; if equal to or greater than 255 bytes, the bitfield must initially be set to 0xFF.

Note: Changing these bitfields is not allowed as long as the START bit is set.

Before launching the communication, make sure that the I²C-bus is idle. This can be checked using the bus idle detection function or by verifying that the IDR bits of the GPIOs selected as SDA and SCL are set. Any low-level incident on the I²C-bus lines that coincides with the START condition asserted by the I2C peripheral may cause its deadlock if not filtered out by the input filters. If such incidents cannot be prevented, design the software so that it restores the normal operation of the I2C peripheral in case of a deadlock, by toggling the PE bit of the I2C_CR1 register.

To launch the communication, set the START bit of the I2C_CR2 register. The controller then automatically sends a START condition followed by the target address, either immediately if the BUSY flag is low, or t_{BUF} time after the BUSY flag transits from high to low state. The BUSY flag is set upon sending the START condition.

In case of an arbitration loss, the controller automatically switches back to target mode and can acknowledge its own address if it is addressed as a target.

Note: The START bit is reset by hardware when the target address is sent on the bus, whatever the received acknowledge value. The START bit is also reset by hardware upon arbitration loss.

In 10-bit addressing mode, the controller automatically keeps resending the target address in a loop until the first address byte (first seven address bits) is acknowledged by the target. Setting the ADDRCF bit makes I2C quit that loop.
If the I2C peripheral is addressed as a target (ADDR = 1) while the START bit is set, the I2C peripheral switches to target mode and the START bit is cleared when the ADDRCF bit is set.

Note: The same procedure is applied for a repeated START condition. In this case, BUSY = 1.

Figure 230. Controller initialization flow

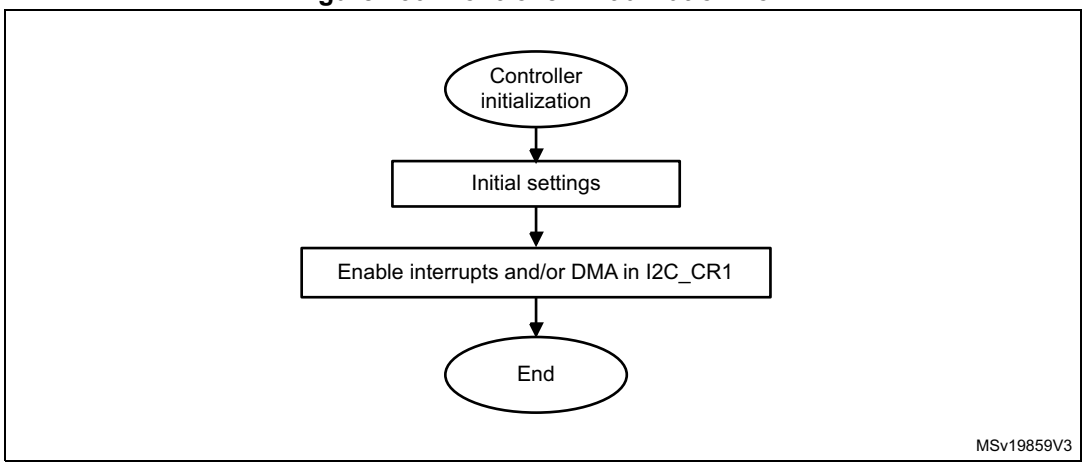

Initialization of a controller receiver addressing a 10-bit address target

If the target address is in 10-bit format, the user can choose to send the complete read sequence, by clearing the HEAD10R bit of the I2C_CR2 register. In this case, the controller automatically sends the following complete sequence after the START bit is set:

(RE)START + Target address 10-bit header Write + Target address second byte + (RE)START + Target address 10-bit header Read.

Figure 231. 10-bit address read access with HEAD10R = 0

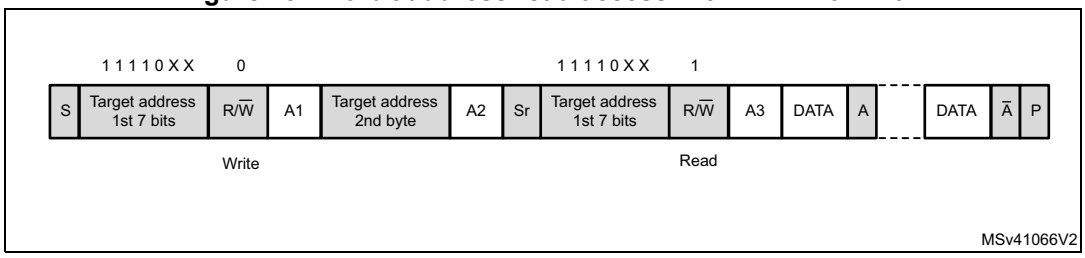

If the controller addresses a 10-bit address target, transmits data to this target and then reads data from the same target, a controller transmission flow must be done first. Then a repeated START is set with the 10-bit target address configured with HEAD10R = 1. In this case, the controller sends this sequence:

RESTART + Target address 10-bit header Read.

Figure 232. 10-bit address read access with HEAD10R = 1

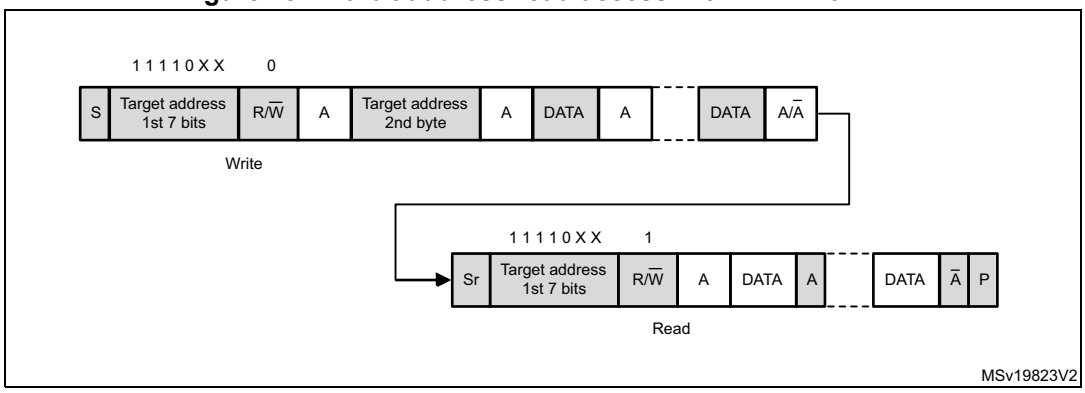

Controller transmitter

In the case of a write transfer, the TXIS flag is set after each byte transmission, after the ninth SCL pulse when an ACK is received.

A TXIS event generates an interrupt if the TXIE bit of the I2C_CR1 register is set. The flag is cleared when the I2C_TXDR register is written with the next data byte to transmit.

The number of TXIS events during the transfer corresponds to the value programmed in NBYTES[7:0]. If the total number of data bytes to transmit is greater than 255, the reload mode must be selected by setting the RELOAD bit in the I2C_CR2 register. In this case, when the NBYTES[7:0] number of data bytes is transferred, the TCR flag is set and the SCL line is stretched low until NBYTES[7:0] is written with a non-zero value.

When RELOAD = 0 and the number of data bytes defined in NBYTES[7:0] is transferred:

- In automatic end mode (AUTOEND = 1), a STOP condition is automatically sent.
- In software end mode (AUTOEND = 0), the TC flag is set and the SCL line is stretched low, to perform software actions:
  - A RESTART condition can be requested by setting the START bit of the I2C_CR2 register with the proper target address configuration and the number of bytes to transfer. Setting the START bit clears the TC flag and sends the START condition on the bus.
  - A STOP condition can be requested by setting the STOP bit of the I2C_CR2 register. This clears the TC flag and sends a STOP condition on the bus.

When a NACK is received, the TXIS flag is not set and a STOP condition is automatically sent. The NACKF flag of the I2C_ISR register is set. An interrupt is generated if the NACKIE bit is set.

Figure 233. Transfer sequence flow for I2C controller transmitter, N ≤ 255 bytes

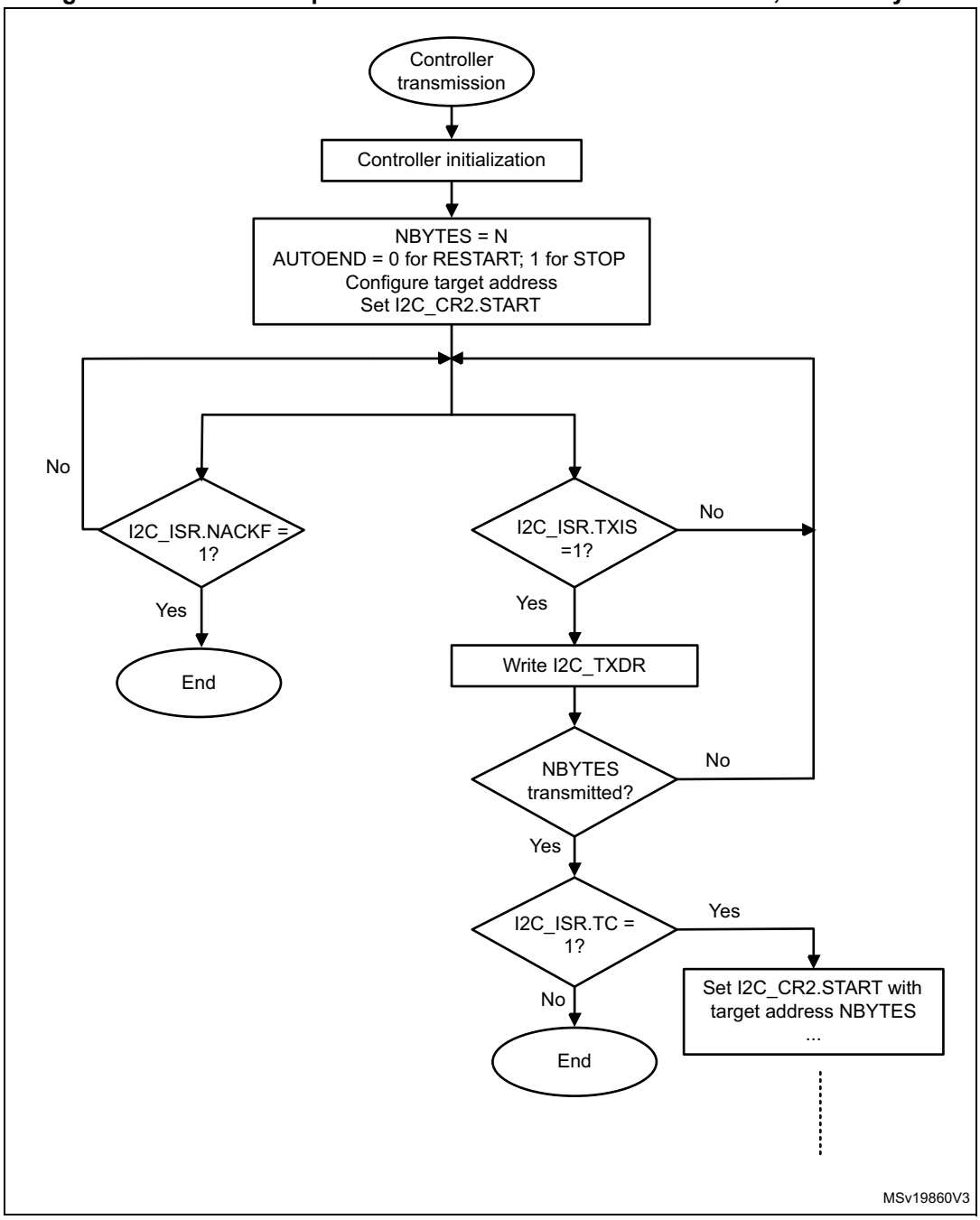

Figure 234. Transfer sequence flow for I2C controller transmitter, N > 255 bytes

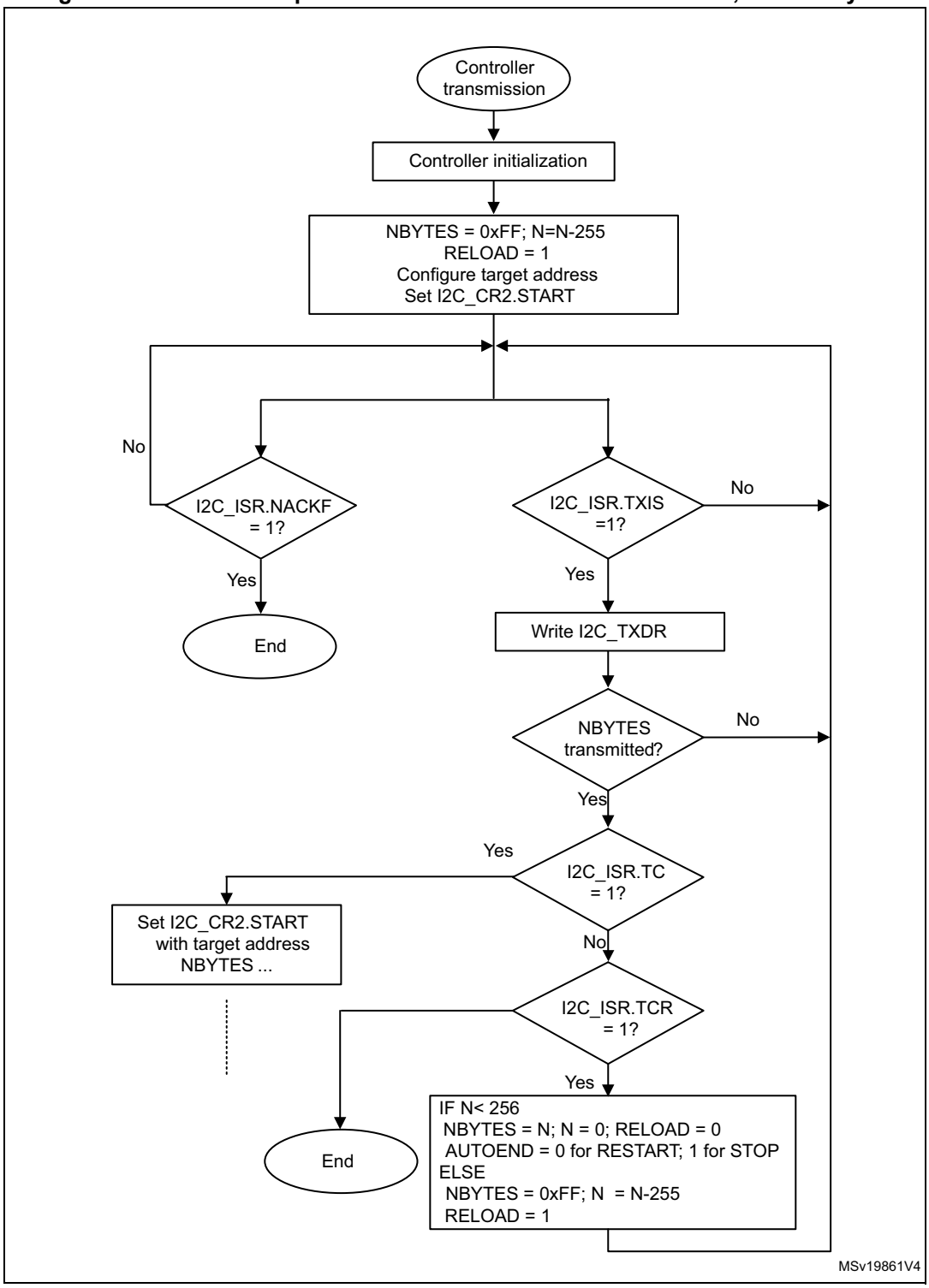

Figure 235. Transfer bus diagrams for I2C controller transmitter (mandatory events only)

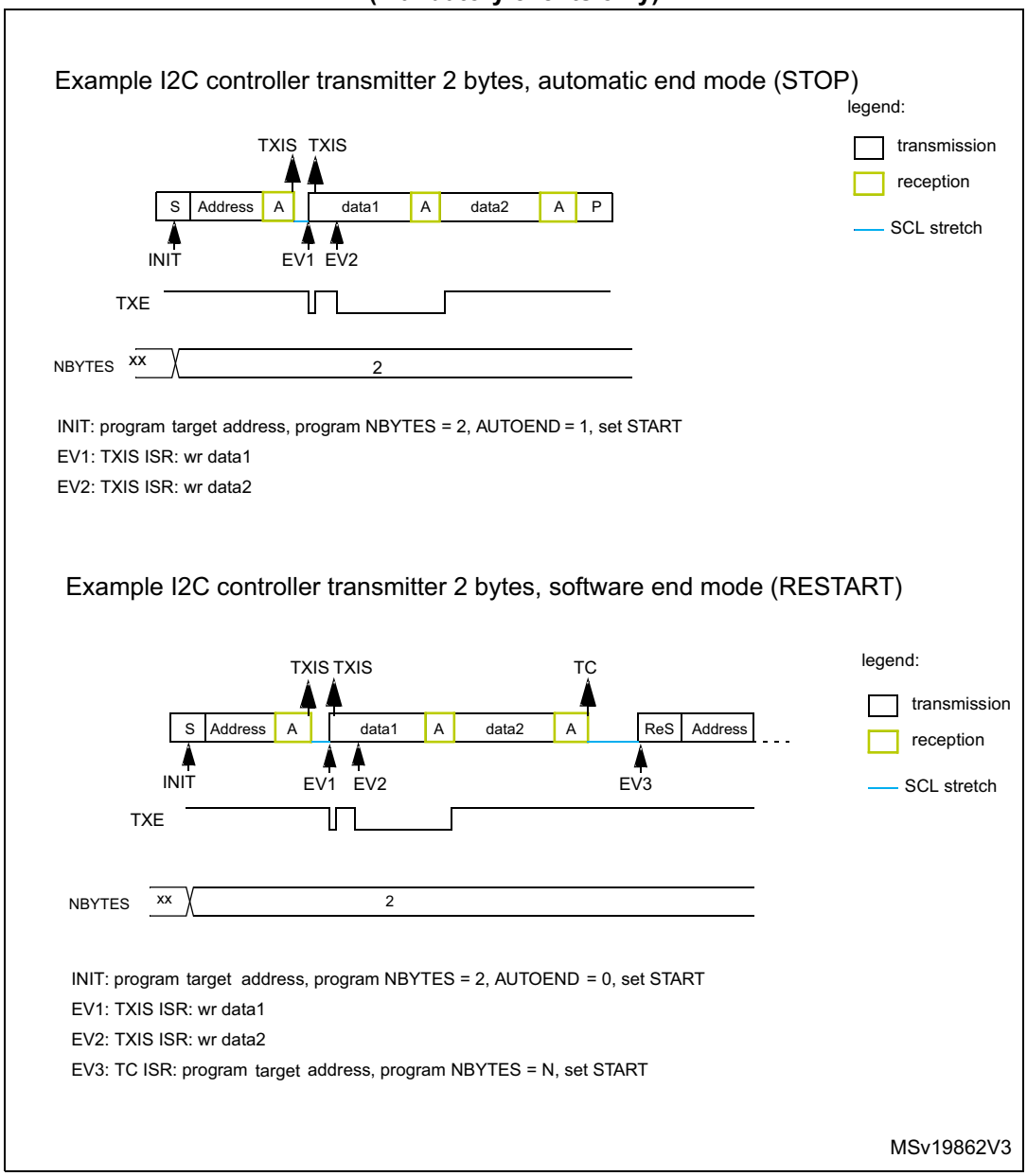

Controller receiver

In the case of a read transfer, the RXNE flag is set after each byte reception, after the eighth SCL pulse. An RXNE event generates an interrupt if the RXIE bit of the I2C_CR1 register is set. The flag is cleared when I2C_RXDR is read.

If the total number of data bytes to receive is greater than 255, select the reload mode, by setting the RELOAD bit of the I2C_CR2 register. In this case, when the NBYTES[7:0] number of data bytes is transferred, the TCR flag is set and the SCL line is stretched low until NBYTES[7:0] is written with a non-zero value.

When RELOAD = 0 and he number of data bytes defined in NBYTES[7:0] is transferred:

- In automatic end mode (AUTOEND = 1), a NACK and a STOP are automatically sent after the last received byte.
- In software end mode (AUTOEND = 0), a NACK is automatically sent after the last received byte. The TC flag is set and the SCL line is stretched low in order to allow software actions:
  - A RESTART condition can be requested by setting the START bit of the I2C_CR2 register, with the proper target address configuration and the number of bytes to transfer. Setting the START bit clears the TC flag and sends the START condition and the target address on the bus.
  - A STOP condition can be requested by setting the STOP bit of the I2C_CR2 register. This clears the TC flag and sends a STOP condition on the bus.

Figure 236. Transfer sequence flow for I2C controller receiver, N ≤ 255 bytes

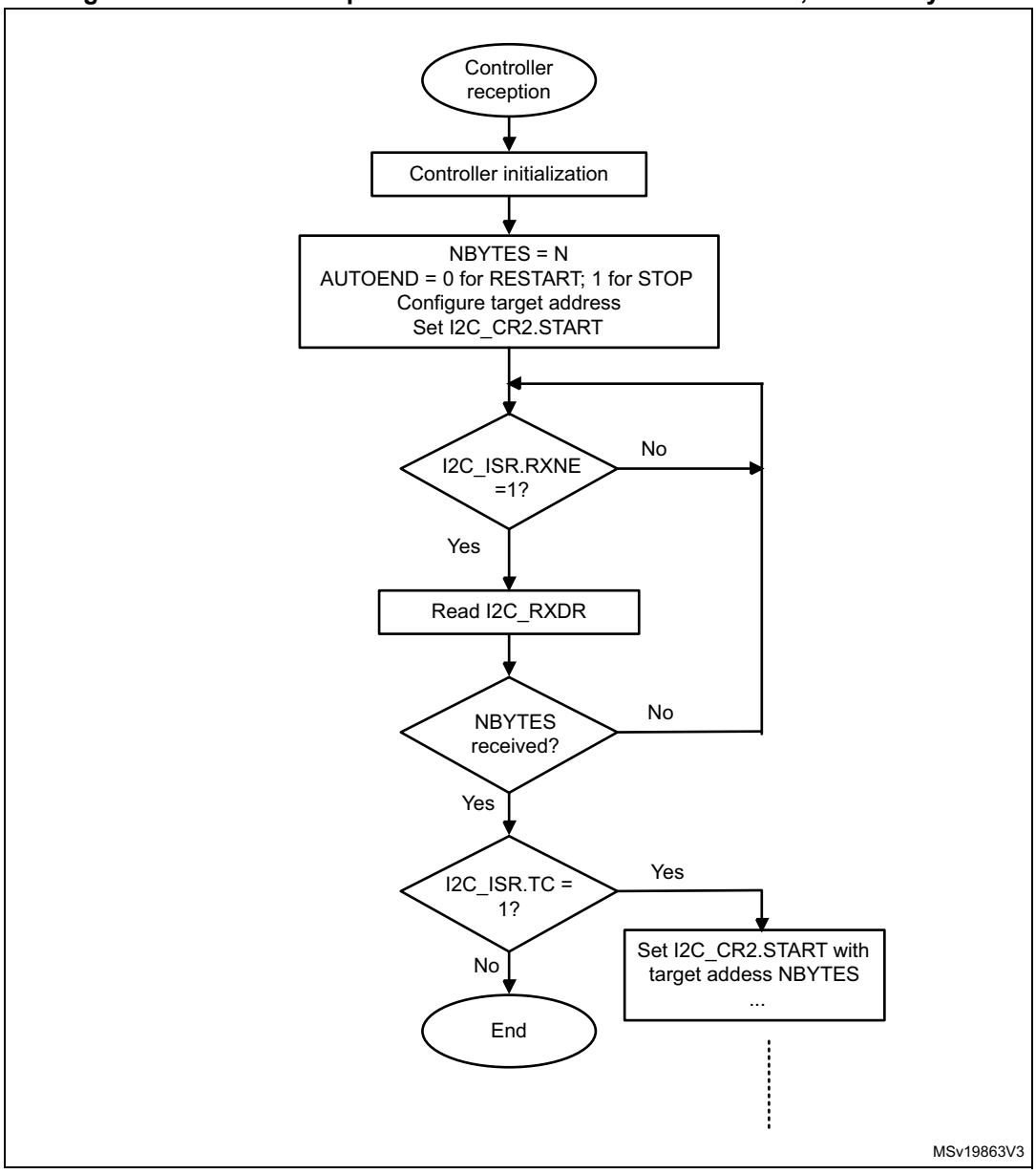

Figure 237. Transfer sequence flow for I2C controller receiver, N > 255 bytes

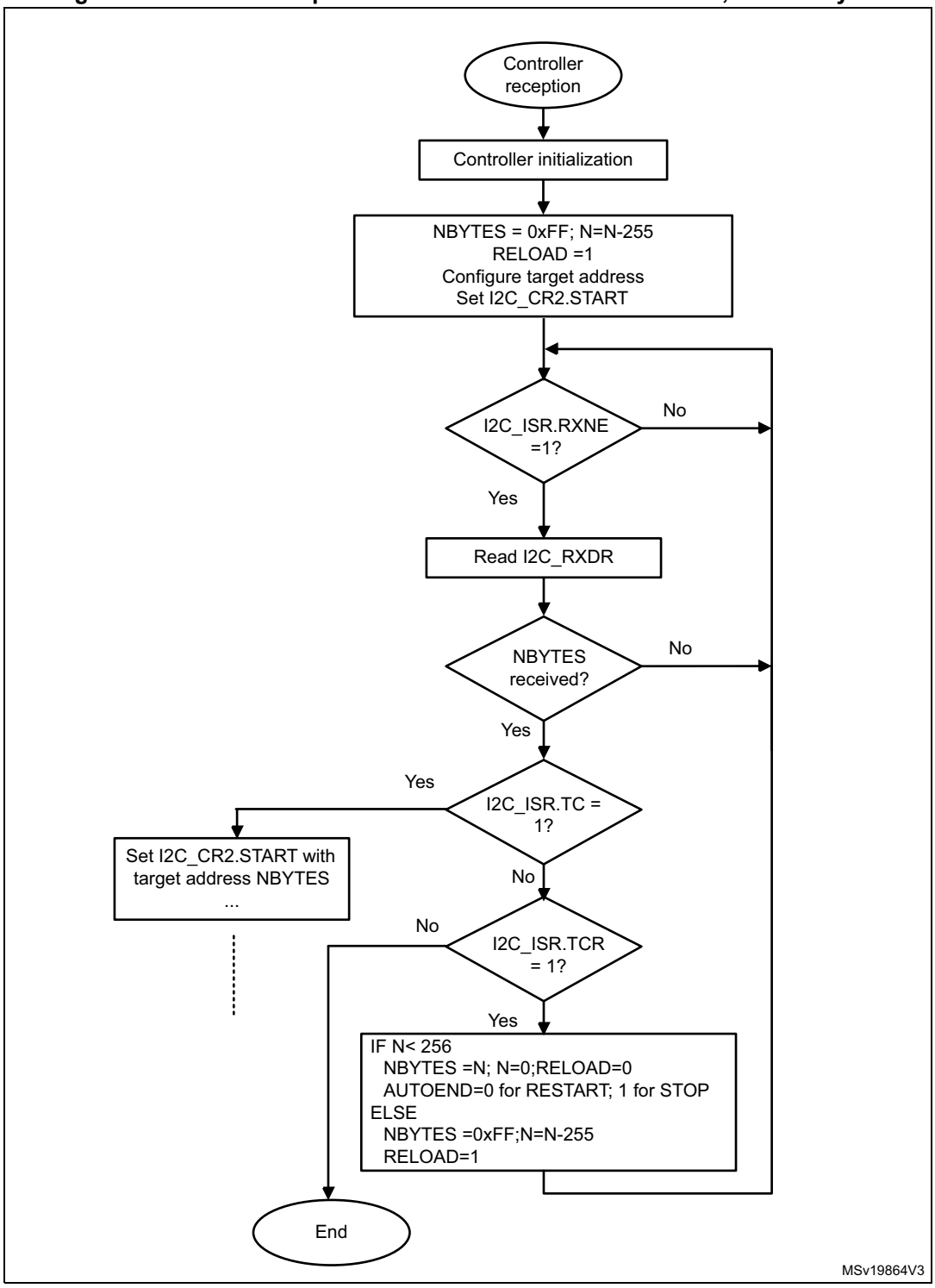

Figure 238. Transfer bus diagrams for I2C controller receiver (mandatory events only)

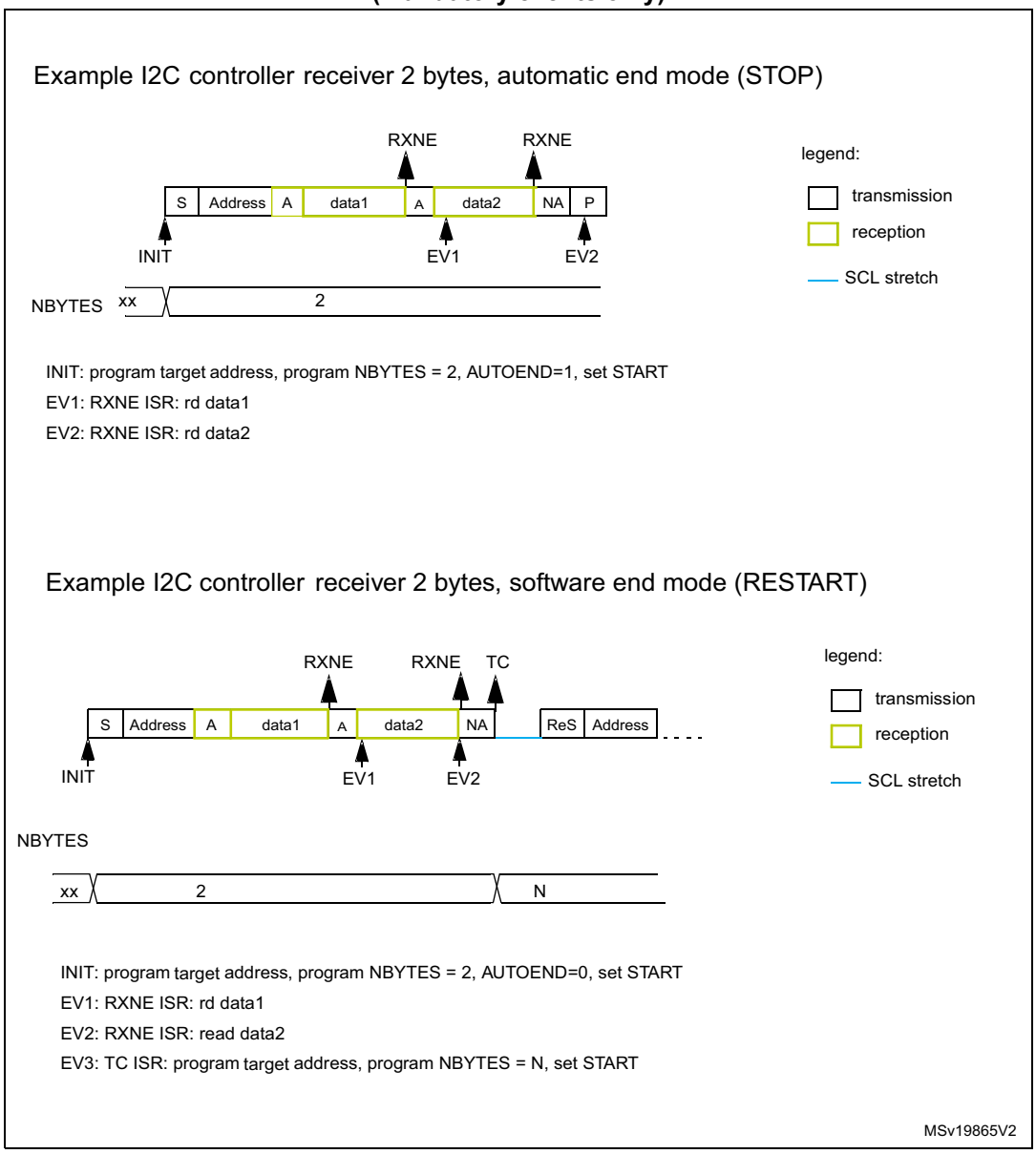

27.4.10 I2C_TIMINGR register configuration examples

The following tables provide examples of how to program the I2C_TIMINGR register to obtain timings compliant with the I²C-bus specification. To get more accurate configuration values, use the STM32CubeMX tool (*I2C Configuration* window).

Table 164. Timing settings for f_{I2CCLK} of 8 MHz

Parameter	Standard-mode (Sm)		Fast-mode (Fm)	Fast-mode Plus (Fm+)
	10 kHz	100 kHz	400 kHz	500 kHz
PRESC[3:0]	0x1	0x1	0x0	0x0
SCLL[7:0]	0xC7	0x13	0x9	0x6
t_{SCLL}	200 x 250 ns = 50 µs	20 x 250 ns = 5.0 µs	10 x 125 ns = 1250 ns	7 x 125 ns = 875 ns
SCLH[7:0]	0xC3	0xF	0x3	0x3
t_{SCLH}	196 x 250 ns = 49 µs	16 x 250 ns = 4.0 µs	4 x 125 ns = 500 ns	4 x 125 ns = 500 ns
t_{SCL}(1)	~100 µs(2)	~10 µs(2)	~2.5 µs(3)	~2.0 µs(4)
SDADEL[3:0]	0x2	0x2	0x1	0x0
t_{SDADEL}	2 x 250 ns = 500 ns	2 x 250 ns = 500 ns	1 x 125 ns = 125 ns	0 ns
SCLDEL[3:0]	0x4	0x4	0x3	0x1
t_{SCLDEL}	5 x 250 ns = 1250 ns	5 x 250 ns = 1250 ns	4 x 125 ns = 500 ns	2 x 125 ns = 250 ns

1. t_{SCL} is greater than t_{SCLL} + t_{SCLH} due to SCL internal detection delay. Values provided for t_{SCL} are examples only.
2. t_{SYNC1} + t_{SYNC2} minimum value is 4 x t_{I2CCLK} = 500 ns. Example with t_{SYNC1} + t_{SYNC2} = 1000 ns.
3. t_{SYNC1} + t_{SYNC2} minimum value is 4 x t_{I2CCLK} = 500 ns. Example with t_{SYNC1} + t_{SYNC2} = 750 ns.
4. t_{SYNC1} + t_{SYNC2} minimum value is 4 x t_{I2CCLK} = 500 ns. Example with t_{SYNC1} + t_{SYNC2} = 655 ns.

Table 165. Timing settings for f_{I2CCLK} of 16 MHz

Parameter	Standard-mode (Sm)		Fast-mode (Fm)	Fast-mode Plus (Fm+)
	10 kHz	100 kHz	400 kHz	1000 kHz
PRESC[3:0]	0x3	0x3	0x1	0x0
SCLL[7:0]	0xC7	0x13	0x9	0x4
t_{SCLL}	200 x 250 ns = 50 µs	20 x 250 ns = 5.0 µs	10 x 125 ns = 1250 ns	5 x 62.5 ns = 312.5 ns
SCLH[7:0]	0xC3	0xF	0x3	0x2
t_{SCLH}	196 x 250 ns = 49 µs	16 x 250 ns = 4.0 µs	4 x 125 ns = 500 ns	3 x 62.5 ns = 187.5 ns
t_{SCL}(1)	~100 µs(2)	~10 µs(2)	~2.5 µs(3)	~1.0 µs(4)
SDADEL[3:0]	0x2	0x2	0x2	0x0
t_{SDADEL}	2 x 250 ns = 500 ns	2 x 250 ns = 500 ns	2 x 125 ns = 250 ns	0 ns
SCLDEL[3:0]	0x4	0x4	0x3	0x2
t_{SCLDEL}	5 x 250 ns = 1250 ns	5 x 250 ns = 1250 ns	4 x 125 ns = 500 ns	3 x 62.5 ns = 187.5 ns

1. t_{SCL} is greater than t_{SCLL} + t_{SCLH} due to SCL internal detection delay. Values provided for t_{SCL} are examples only.
2. t_{SYNC1} + t_{SYNC2} minimum value is 4 x t_{I2CCLK} = 250 ns. Example with t_{SYNC1} + t_{SYNC2} = 1000 ns.
3. t_{SYNC1} + t_{SYNC2} minimum value is 4 x t_{I2CCLK} = 250 ns. Example with t_{SYNC1} + t_{SYNC2} = 750 ns.
4. t_{SYNC1} + t_{SYNC2} minimum value is 4 x t_{I2CCLK} = 250 ns. Example with t_{SYNC1} + t_{SYNC2} = 500 ns.

27.4.11 SMBus specific features

Introduction

The system management bus (SMBus) is a two-wire interface through which various devices can communicate with each other and with the rest of the system. It is based on operation principles of the I²C-bus. The SMBus provides a control bus for system and power management related tasks.

The I2C peripheral is compatible with the SMBus specification (http://smbus.org).

The system management bus specification refers to three types of devices:

- **Target** is a device that receives or responds to a command.
- **Controller** is a device that issues commands, generates clocks, and terminates the transfer.
- **Host** is a specialized controller that provides the main interface to the system CPU. A host must be a controller-target and must support the SMBus *host notify* protocol. Only one host is allowed in a system.

The I2C peripheral can be configured as a controller or a target device, and also as a host.

Bus protocols

There are eleven possible command protocols for any given device. The device can use any or all of them to communicate. These are: *Quick Command*, *Send Byte*, *Receive Byte*, *Write Byte*, *Write Word*, *Read Byte*, *Read Word*, *Process Call*, *Block Read*, *Block Write*, and *Block Write-Block Read Process Call*. The protocols must be implemented by the user software.

For more details on these protocols, refer to the SMBus specification (http://smbus.org).

STM32CubeMX implements an SMBus stack thanks to X-CUBE-SMBUS, a downloadable software pack that allows basic SMBus configuration per I2C instance.

Address resolution protocol (ARP)

SMBus target address conflicts can be resolved by dynamically assigning a new unique address to each target device. To provide a mechanism to isolate each device for the purpose of address assignment, each device must implement a unique 128-bit device identifier (UDID). In the I2C peripheral, it is implemented by software.

The I2C peripheral supports the Address resolution protocol (ARP). The SMBus device default address (0b1100 001) is enabled by setting the SMBDEN bit of the I2C_CR1 register. The ARP commands must be implemented by the user software.

Arbitration is also performed in target mode for ARP support.

For more details on the SMBus address resolution protocol, refer to the SMBus specification (http://smbus.org).

Received command and data acknowledge control

An SMBus receiver must be able to NACK each received command or data. In order to allow the ACK control in target mode, the target byte control mode must be enabled, by setting the SBC bit of the I2C_CR1 register. Refer to *Target byte control mode* for more details.

Host notify protocol

To enable the host notify protocol, set the SMBHEN bit of the I2C_CR1 register. The I2C peripheral then acknowledges the SMBus host address (0b0001 000).

When this protocol is used, the device acts as a controller and the host as a target.

SMBus alert

The I2C peripheral supports the SMBALERT# optional signal through the SMBA pin. With the SMBALERT# signal, an SMBus target device can signal to the SMBus host that it wants to talk. The host processes the interrupt and simultaneously accesses all SMBALERT# devices through the alert response address (0b0001 100). Only the device/devices which pulled SMBALERT# low acknowledges/acknowledge the alert response address.

When the I2C peripheral is configured as an SMBus target device (SMBHEN = 0), the SMBA pin is pulled low by setting the ALERTEN bit of the I2C_CR1 register. The alert response address is enabled at the same time.

When the I2C peripheral is configured as an SMBus host (SMBHEN = 1), the ALERT flag of the I2C_ISR register is set when a falling edge is detected on the SMBA pin and ALERTEN = 1. An interrupt is generated if the ERRIE bit of the I2C_CR1 register is set. When ALERTEN = 0, the alert line is considered high even if the external SMBA pin is low.

Note: If the SMBus alert pin is not required, keep the ALERTEN bit cleared. The SMBA pin can then be used as a standard GPIO.

Packet error checking

A packet error checking mechanism introduced in the SMBus specification improves reliability and communication robustness. The packet error checking is implemented by appending a packet error code (PEC) at the end of each message transfer. The PEC is calculated by using the $C(x) = x^8 + x^2 + x + 1$ CRC-8 polynomial on all the message bytes (including addresses and read/write bits).

The I2C peripheral embeds a hardware PEC calculator and allows a not acknowledge to be sent automatically when the received byte does not match the hardware calculated PEC.

Timeouts

To comply with the SMBus timeout specifications, the I2C peripheral embeds hardware timers.

Table 166. SMBus timeout specifications

Symbol	Parameter	Limits		Unit
		Min	Max	
$t_{TIMEOUT}$	Detect clock low timeout	25	35	ms
$t_{LOW:SEXT}$(1)	Cumulative clock low extend time (target device)	-	25	
$t_{LOW:MEXT}$(2)	Cumulative clock low extend time (controller device)	-	10	

1. $t_{LOW:SEXT}$ is the cumulative time a given target device is allowed to extend the clock cycles in one message from the initial START to the STOP. It is possible that another target device or the controller also extends the clock causing the combined clock low extend time to be greater than $t_{LOW:SEXT}$. The value provided applies to a single target device connected to a full-target controller.

2. $t_{LOW:MEXT}$ is the cumulative time a controller device is allowed to extend its clock cycles within each byte of a message as defined from START-to-ACK, ACK-to-ACK, or ACK-to-STOP. It is possible that a target device or another controller also extends the clock, causing the combined clock low time to be greater than $t_{LOW:MEXT}$ on a given byte. The value provided applies to a single target device connected to a full-target controller.

Figure 239. Timeout intervals for $t_{LOW:SEXT}$, $t_{LOW:MEXT}$

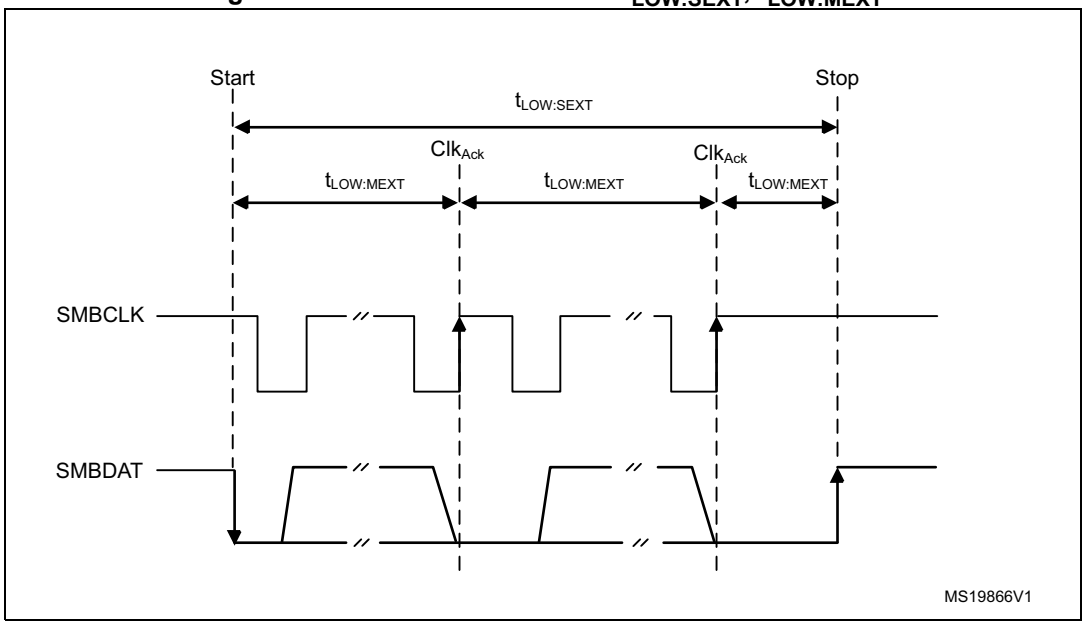

Bus idle detection

A controller can assume that the bus is free if it detects that the clock and data signals have been high for $t_{IDLE} > t_{HIGH}$(max) (refer to the table in *Section 27.4.9*).

This timing parameter covers the condition where a controller is dynamically added to the bus, and may not have detected a state transition on the SMBCLK or SMBDAT lines. In this case, the controller must wait long enough to ensure that a transfer is not currently in progress. The I2C peripheral supports a hardware bus idle detection.

27.4.12 SMBus initialization

In addition to the I2C initialization for the I²C-bus, the use of the peripheral for the SMBus communication requires some extra initialization steps.

Received command and data acknowledge control (target mode)

An SMBus receiver must be able to NACK each received command or data. To allow ACK control in target mode, the target byte control mode must be enabled, by setting the SBC bit of the I2C_CR1 register. Refer to *Target byte control mode* for more details.

Specific addresses (target mode)

The specific SMBus addresses must be enabled if required. Refer to *Bus idle detection* for more details.

The SMBus device default address (0b1100 001) is enabled by setting the SMBDEN bit of the I2C_CR1 register.

The SMBus host address (0b0001 000) is enabled by setting the SMBHEN bit of the I2C_CR1 register.

The alert response address (0b0001100) is enabled by setting the ALERTEN bit of the I2C_CR1 register.

Packet error checking

PEC calculation is enabled by setting the PECEN bit of the I2C_CR1 register. Then the PEC transfer is managed with the help of the hardware byte counter associated with the NBYTES[7:0] bitfield of the I2C_CR2 register. The PECEN bit must be configured before enabling the I2C.

The PEC transfer is managed with the hardware byte counter, so the SBC bit must be set when interfacing the SMBus in target mode. The PEC is transferred after transferring NBYTES[7:0] - 1 data bytes, if the PECBYTE bit is set and the RELOAD bit is cleared. If RELOAD is set, PECBYTE has no effect.

Caution: Changing the PECEN configuration is not allowed when the I2C peripheral is enabled.

Table 167. SMBus with PEC configuration

Mode	SBC bit	RELOAD bit	AUTOEND bit	PECBYTE bit
Controller Tx/Rx NBYTES + PEC+ STOP	X	0	1	1
Controller Tx/Rx NBYTES + PEC + ReSTART	X	0	0	1
Target Tx/Rx with PEC	1	0	X	1

Timeout detection

The timeout detection is enabled by setting the TIMOUTEN and TEXTEN bits of the I2C_TIMEOUTR register. The timers must be programmed in such a way that they detect a timeout before the maximum time given in the SMBus specification.

$t_{TIMEOUT}$ check

To check the $t_{TIMEOUT}$ parameter, load the 12-bit TIMEOUTA[11:0] bitfield with the timer reload value. Keep the TIDLE bit at 0 to detect the SCL low level timeout.

Then set the TIMOUTEN bit of the I2C_TIMEOUTR register, to enable the timer.

If SCL is tied low for longer than the (TIMEOUTA + 1) x 2048 x t_{I2CCLK} period, the TIMEOUT flag of the I2C_ISR register is set.

Refer to *Table 168*.

Caution: Changing the TIMEOUTA[11:0] bitfield and the TIDLE bit values is not allowed when the TIMEOUTEN bit is set.

$t_{LOW:SEXT}$ and $t_{LOW:MEXT}$ check

A 12-bit timer associated with the TIMEOUTB[11:0] bitfield allows checking $t_{LOW:SEXT}$ for the I2C peripheral operating as a target, or $t_{LOW:MEXT}$ when it operates as a controller. As the standard only specifies a maximum, the user can choose the same value for both. The timer is then enabled by setting the TEXTEN bit in the I2C_TIMEOUTR register.

If the SMBus peripheral performs a cumulative SCL stretch for longer than the (TIMEOUTB + 1) x 2048 x t_{I2CCLK} period, and within the timeout interval described in *Bus idle detection* section, the TIMEOUT flag of the I2C_ISR register is set.

Refer to *Table 169*.

Caution: Changing the TIMEOUTB[11:0] bitfield value is not allowed when the TEXTEN bit is set.

Bus idle detection

To check the t_{IDLE} period, the TIMEOUTA[11:0] bitfield associated with 12-bit timer must be loaded with the timer reload value. Keep the TIDLE bit at 1 to detect both SCL and SDA high level timeout. Then set the TIMOUTEN bit of the I2C_TIMEOUTR register to enable the timer.

If both the SCL and SDA lines remain high for longer than the (TIMEOUTA + 1) x 4 x t_{I2CCLK} period, the TIMEOUT flag of the I2C_ISR register is set.

Refer to *Table 170*.

Caution: Changing the TIMEOUTA[11:0] bitfield and the TIDLE bit values is not allowed when the TIMEOUTEN bit is set.

27.4.13 SMBus I2C_TIMEOUTR register configuration examples

The following tables provide examples of settings to reach desired $t_{TIMEOUT}$, $t_{LOW:SEXT}$, $t_{LOW:MEXT}$, and t_{IDLE} timings at different f_{I2CCLK} frequencies.

Table 168. TIMEOUTA[11:0] for maximum $t_{TIMEOUT}$ of 25 ms

f_{I2CCLK}	TIMEOUTA[11:0]	TIDLE	TIMEOUTEN	$t_{TIMEOUT}$
8 MHz	0x61	0	1	98 x 2048 x 125 ns = 25 ms
16 MHz	0xC3	0	1	196 x 2048 x 62.5 ns = 25 ms

Table 169. TIMEOUTB[11:0] for maximum $t_{LOW:SEXT}$ and $t_{LOW:MEXT}$ of 8 ms

f_{I2CCLK}	TIMEOUTB[11:0]	TEXTEN	$t_{LOW:SEXT}$ $t_{LOW:MEXT}$
8 MHz	0x1F	1	32 x 2048 x 125 ns = 8 ms
16 MHz	0x3F	1	64 x 2048 x 62.5 ns = 8 ms

Table 170. TIMEOUTA[11:0] for maximum t_{IDLE} of 50 µs

f_{I2CCLK}	TIMEOUTA[11:0]	TIDLE	TIMEOUTEN	t_{IDLE}
8 MHz	0x63	1	1	100 x 4 x 125 ns = 50 µs
16 MHz	0xC7	1	1	200 x 4 x 62.5 ns = 50 µs

27.4.14 SMBus target mode

In addition to I2C target transfer management (refer to *Section 27.4.8: I2C target mode*), this section provides extra software flowcharts to support SMBus.

SMBus target transmitter

When using the I2C peripheral in SMBus mode, set the SBC bit to enable the PEC transmission at the end of the programmed number of data bytes. When the PECBYTE bit is set, the number of bytes programmed in NBYTES[7:0] includes the PEC transmission. In that case, the total number of TXIS interrupts is NBYTES[7:0] - 1, and the content of the I2C_PECR register is automatically transmitted if the controller requests an extra byte after the transfer of the NBYTES[7:0] - 1 data bytes.

Caution: The PECBYTE bit has no effect when the RELOAD bit is set.

Figure 240. Transfer sequence flow for SMBus target transmitter N bytes + PEC

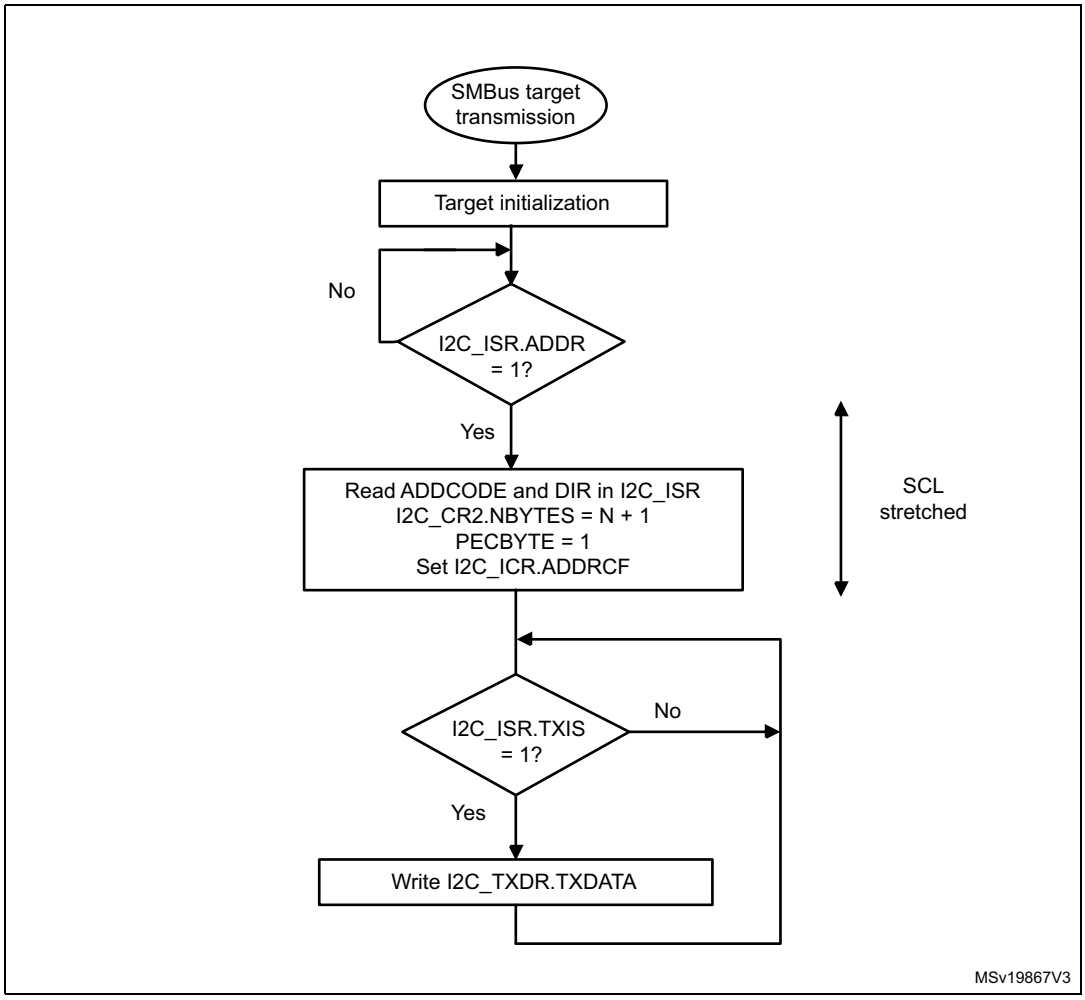

Figure 241. Transfer bus diagram for SMBus target transmitter (SBC = 1)

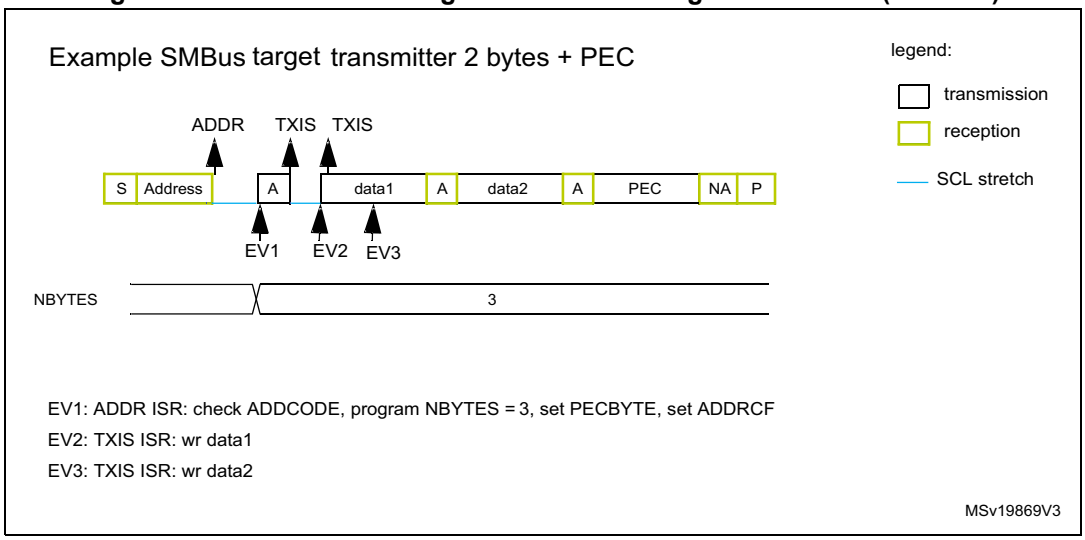

SMBus target receiver

When using the I2C peripheral in SMBus mode, set the SBC bit to enable the PEC checking at the end of the programmed number of data bytes. To allow the ACK control of each byte, the reload mode must be selected (RELOAD = 1). Refer to *Target byte control mode* for more details.

To check the PEC byte, the RELOAD bit must be cleared and the PECBYTE bit must be set. In this case, after the receipt of NBYTES[7:0] - 1 data bytes, the next received byte is compared with the internal I2C_PECR register content. A NACK is automatically generated if the comparison does not match, and an ACK is automatically generated if the comparison matches, whatever the ACK bit value. Once the PEC byte is received, it is copied into the I2C_RXDR register like any other data, and the RXNE flag is set.

Upon a PEC mismatch, the PECERR flag is set and an interrupt is generated if the ERRIE bit of the I2C_CR1 register is set.

If no ACK software control is required, the user can set the PECBYTE bit and, in the same write operation, load NBYTES[7:0] with the number of bytes to receive in a continuous flow. After the receipt of NBYTES[7:0] - 1 bytes, the next received byte is checked as being the PEC.

Caution: The PECBYTE bit has no effect when the RELOAD bit is set.

Figure 242. Transfer sequence flow for SMBus target receiver N bytes + PEC

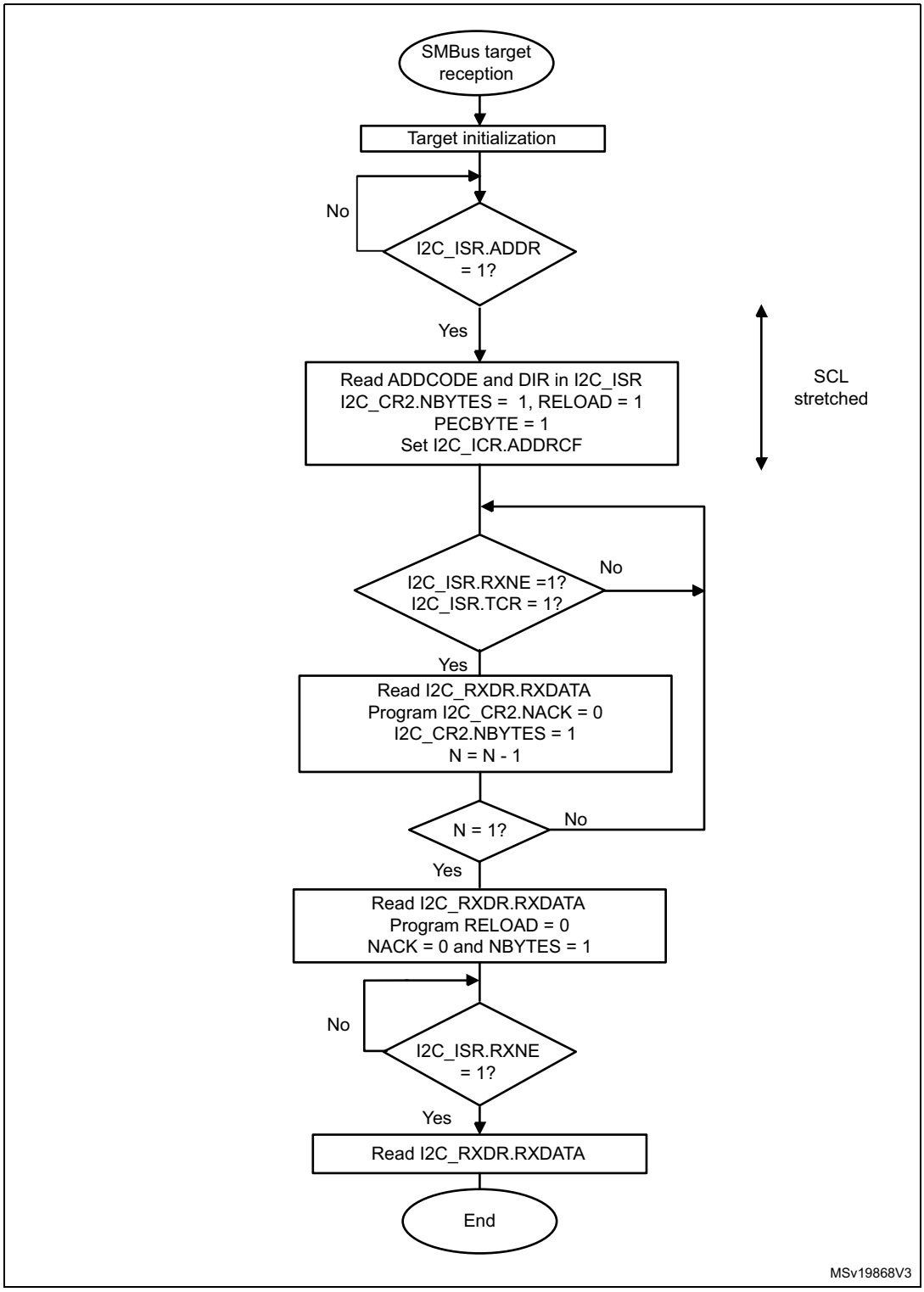

Figure 243. Bus transfer diagrams for SMBus target receiver (SBC = 1)

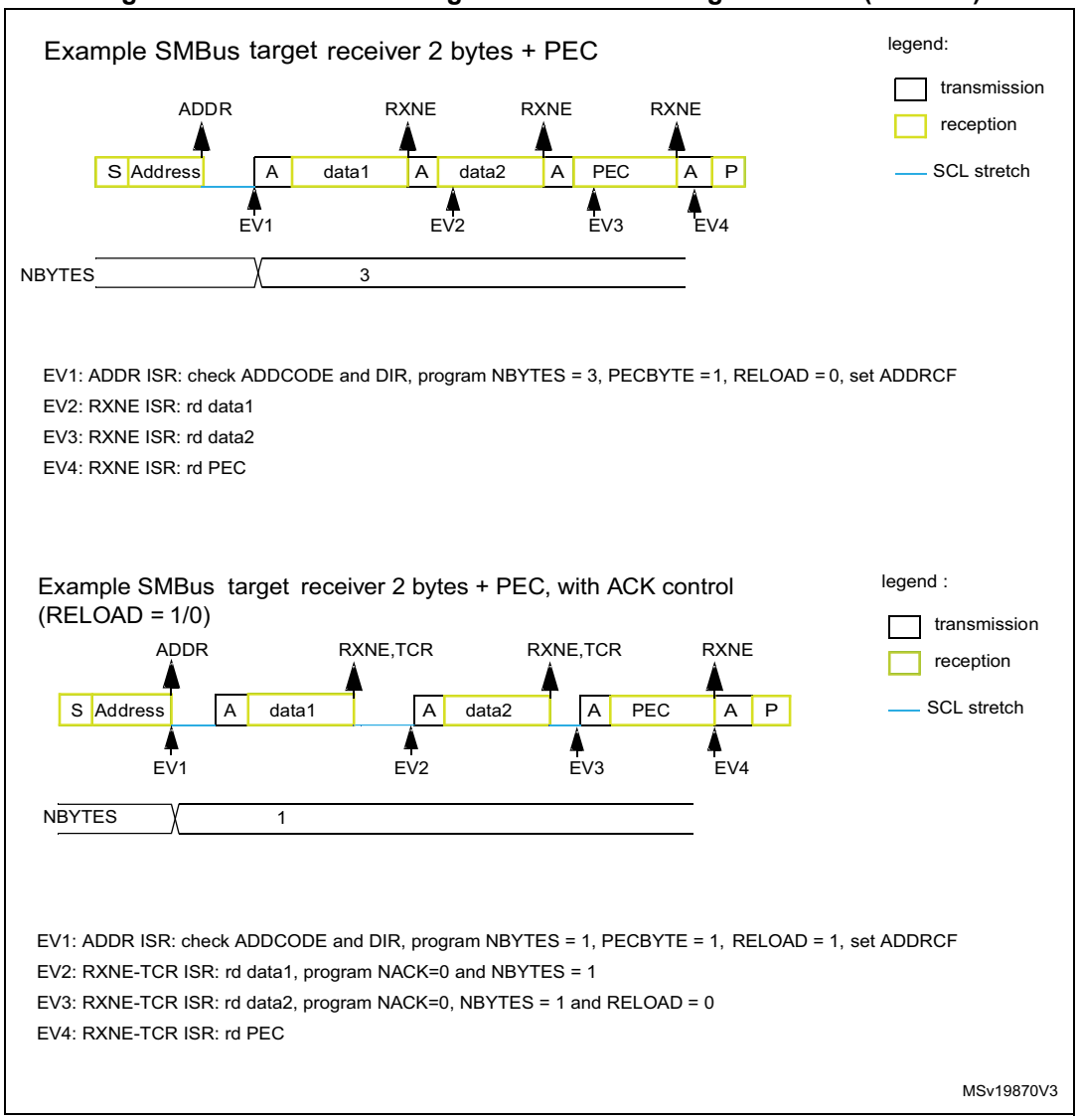

27.4.15 SMBus controller mode

In addition to I2C controller transfer management (refer to *Section 27.4.9: I2C controller mode*), this section provides extra software flowcharts to support SMBus.

SMBus controller transmitter

When the SMBus controller wants to transmit the PEC, the PECBYTE bit must be set and the number of bytes must be loaded in the NBYTES[7:0] bitfield, before setting the START bit. In this case, the total number of TXIS interrupts is NBYTES[7:0] - 1. So if the PECBYTE bit is set when NBYTES[7:0] = 0x1, the content of the I2C_PECR register is automatically transmitted.

If the SMBus controller wants to send a STOP condition after the PEC, the automatic end mode must be selected (AUTOEND = 1). In this case, the STOP condition automatically follows the PEC transmission.

When the SMBus controller wants to send a RESTART condition after the PEC, the software mode must be selected (AUTOEND = 0). In this case, once NBYTES[7:0] - 1 are transmitted, the I2C_PECR register content is transmitted. The TC flag is set after the PEC transmission, stretching the SCL line low. The RESTART condition must be programmed in the TC interrupt subroutine.

Caution: The PECBYTE bit has no effect when the RELOAD bit is set.

Figure 244. Bus transfer diagrams for SMBus controller transmitter

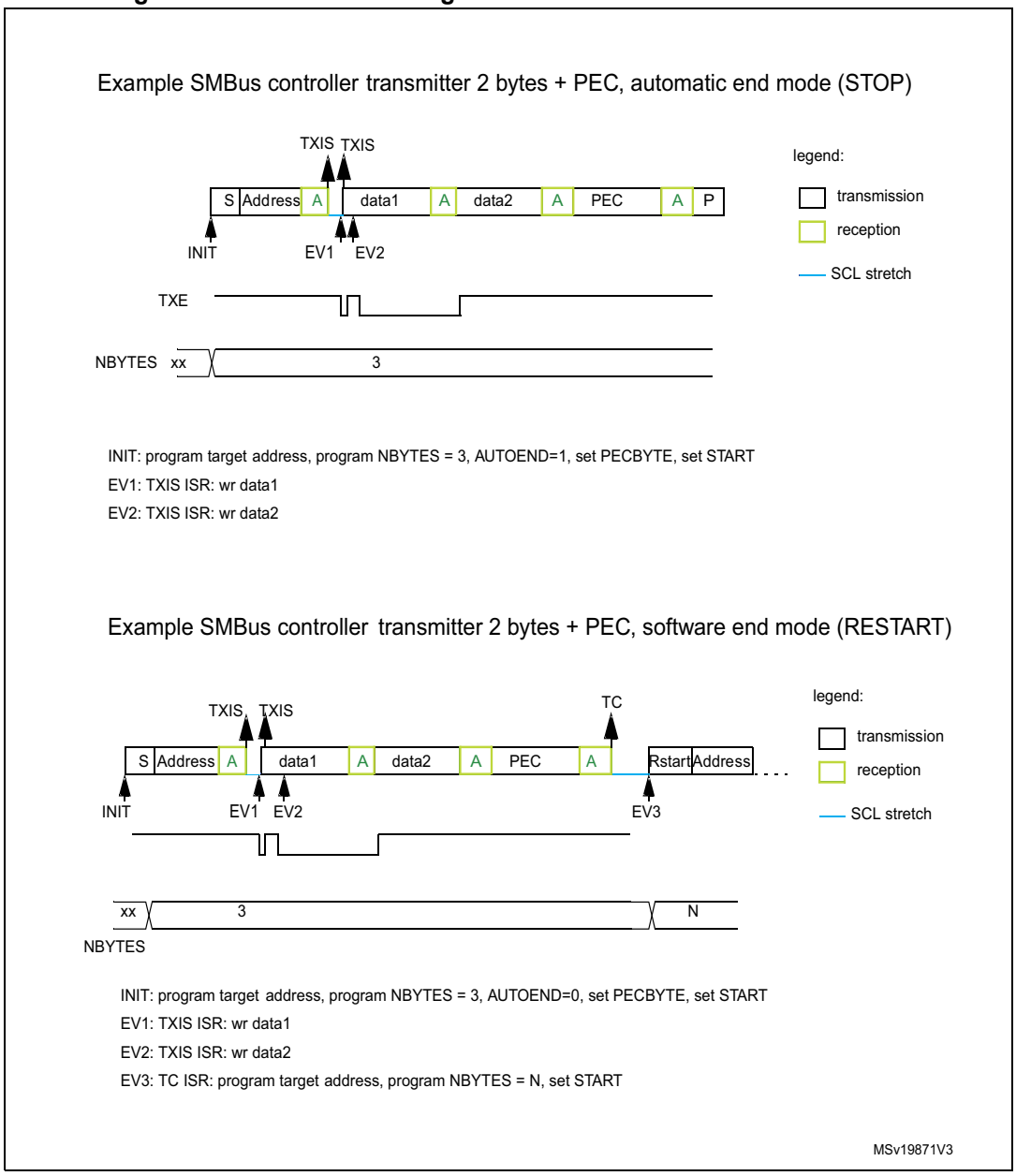

SMBus controller receiver

When the SMBus controller wants to receive, at the end of the transfer, the PEC followed by a STOP condition, the automatic end mode can be selected (AUTOEND = 1). The PECBYTE bit must be set and the target address programmed before setting the START bit. In this case, after the receipt of NBYTES[7:0] - 1 data bytes, the next received byte is automatically checked versus the I2C_PECR register content. A NACK response is given to the PEC byte, followed by a STOP condition.

When the SMBus controller receiver wants to receive, at the end of the transfer, the PEC byte followed by a RESTART condition, the software mode must be selected (AUTOEND = 0). The PECBYTE bit must be set and the target address programmed before setting the START bit. In this case, after the receipt of NBYTES[7:0] - 1 data bytes, the next received byte is automatically checked versus the I2C_PECR register content. The TC flag is set after the PEC byte reception, stretching the SCL line low. The RESTART condition can be programmed in the TC interrupt subroutine.

Caution: The PECBYTE bit has no effect when the RELOAD bit is set.

Figure 245. Bus transfer diagrams for SMBus controller receiver

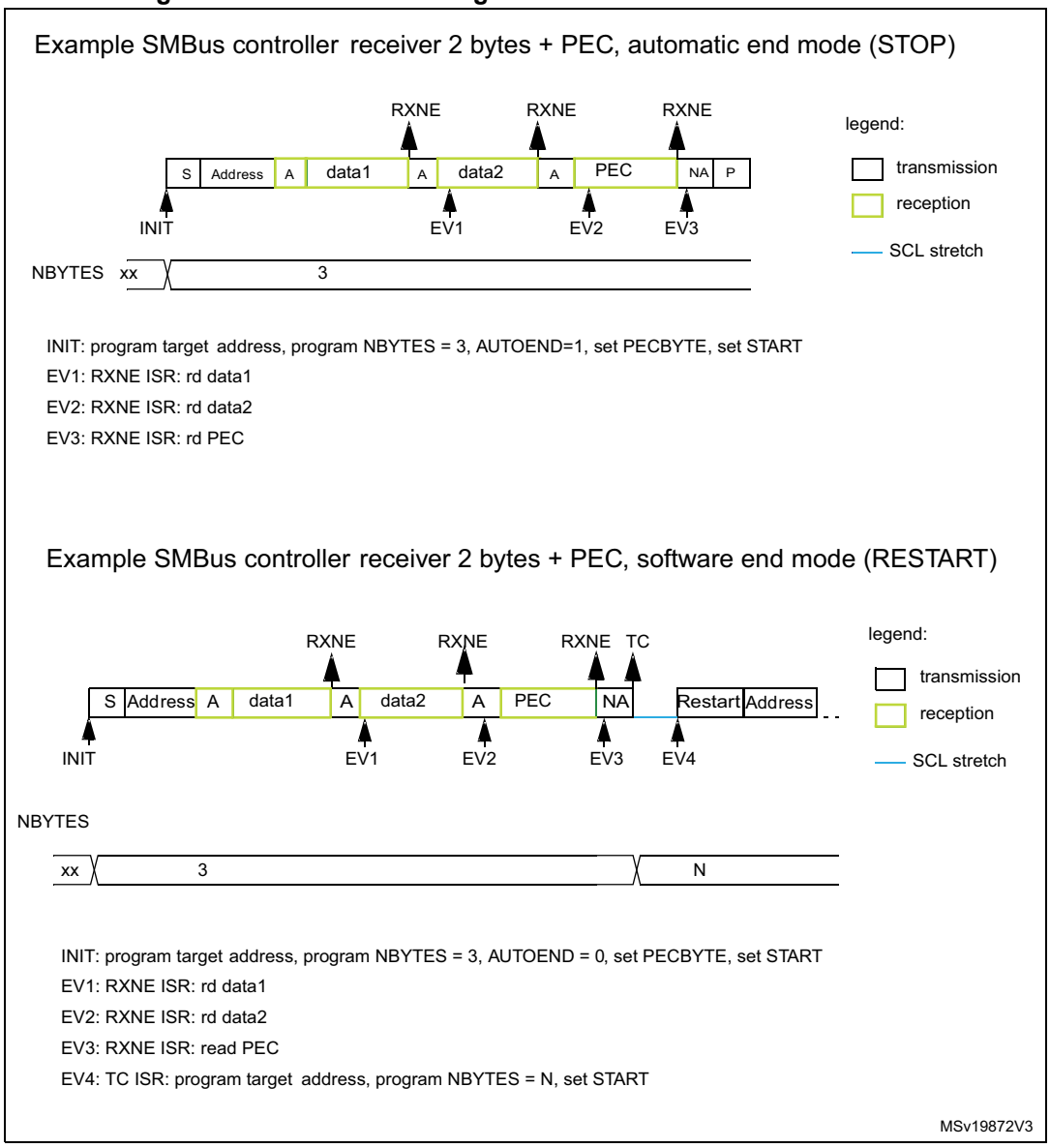

27.4.16 Wake-up from Stop mode on address match

The I2C peripheral is able to wake up the device from Stop mode (APB clock is off), when the device is addressed. All addressing modes are supported.

The wake-up from Stop mode is enabled by setting the WUPEN bit of the I2C_CR1 register. The HSI oscillator must be selected as the clock source for I2CCLK to allow the wake-up from Stop mode.

In Stop mode, the HSI oscillator is stopped. Upon detecting START condition, the I2C interface starts the HSI oscillator and stretches SCL low until the oscillator wakes up.

HSI is then used for the address reception.

If the received address matches the device own address, I2C stretches SCL low until the device wakes up. The stretch is released when the ADDR flag is cleared by software. Then the transfer goes on normally.

If the address does not match, the HSI oscillator is stopped again and the device does not wake up.

Note: When the system clock is used as I2C clock, or when WUPEN = 0, the HSI oscillator does not start upon receiving START condition.

Only an ADDR interrupt can wake the device up. Therefore, do not enter Stop mode when I2C is performing a transfer, either as a controller or as an addressed target after the ADDR flag is set. This can be managed by clearing the SLEEPDEEP bit in the ADDR interrupt routine and setting it again only after the STOPF flag is set.

Caution: The digital filter is not compatible with the wake-up from Stop mode feature. Before entering Stop mode with the WUPEN bit set, deactivate the digital filter, by writing zero to the DNF[3:0] bitfield.

Caution: The feature is only available when the HSI oscillator is selected as the I2C clock.

Caution: Clock stretching must be enabled (NOSTRETCH = 0) to ensure proper operation of the wake-up from Stop mode feature.

Caution: If the wake-up from Stop mode is disabled (WUPEN = 0), the I2C peripheral must be disabled before entering Stop mode (PE = 0).

27.4.17 Error conditions

The following errors are the conditions that can cause the communication to fail.

Bus error (BERR)

A bus error is detected when a START or a STOP condition is detected and is not located after a multiple of nine SCL clock pulses. START or STOP condition is detected when an SDA edge occurs while SCL is high.

The bus error flag is set only if the I2C peripheral is involved in the transfer as controller or addressed target (that is, not during the address phase in target mode).

In case of a misplaced START or RESTART detection in target mode, the I2C peripheral enters address recognition state like for a correct START condition.

When a bus error is detected, the BERR flag of the I2C_ISR register is set, and an interrupt is generated if the ERRIE bit of the I2C_CR1 register is set.

Arbitration loss (ARLO)

An arbitration loss is detected when a high level is sent on the SDA line, but a low level is sampled on the SCL rising edge.

In controller mode, arbitration loss is detected during the address phase, data phase and data acknowledge phase. In this case, the SDA and SCL lines are released, the START control bit is cleared by hardware and the controller switches automatically to target mode.

In target mode, arbitration loss is detected during data phase and data acknowledge phase. In this case, the transfer is stopped and the SCL and SDA lines are released.

When an arbitration loss is detected, the ARLO flag of the I2C_ISR register is set and an interrupt is generated if the ERRIE bit of the I2C_CR1 register is set.

Overrun/underrun error (OVR)

An overrun or underrun error is detected in target mode when NOSTRETCH = 1 and:

- In reception when a new byte is received and the RXDR register has not been read yet. The new received byte is lost, and a NACK is automatically sent as a response to the new byte.
- In transmission:
  - When STOPF = 1 and the first data byte must be sent. The content of the I2C_TXDR register is sent if TXE = 0, 0xFF if not.
  - When a new byte must be sent and the I2C_TXDR register has not been written yet, 0xFF is sent.

When an overrun or underrun error is detected, the OVR flag of the I2C_ISR register is set and an interrupt is generated if the ERRIE bit of the I2C_CR1 register is set.

Packet error checking error (PECERR)

A PEC error is detected when the received PEC byte does not match the I2C_PECR register content. A NACK is automatically sent after the wrong PEC reception.

When a PEC error is detected, the PECERR flag of the I2C_ISR register is set and an interrupt is generated if the ERRIE bit of the I2C_CR1 register is set.

Timeout error (TIMEOUT)

A timeout error occurs for any of these conditions:

- TIDLE = 0 and SCL remains low for the time defined in the TIMEOUTA[11:0] bitfield: this is used to detect an SMBus timeout.
- TIDLE = 1 and both SDA and SCL remains high for the time defined in the TIMEOUTA [11:0] bitfield: this is used to detect a bus idle condition.
- Controller cumulative clock low extend time reaches the time defined in the TIMEOUTB[11:0] bitfield (SMBus $t_{LOW:MEXT}$ parameter).
- Target cumulative clock low extend time reaches the time defined in the TIMEOUTB[11:0] bitfield (SMBus $t_{LOW:SEXT}$ parameter).

When a timeout violation is detected in controller mode, a STOP condition is automatically sent.

When a timeout violation is detected in target mode, the SDA and SCL lines are automatically released.

When a timeout error is detected, the TIMEOUT flag is set in the I2C_ISR register and an interrupt is generated if the ERRIE bit of the I2C_CR1 register is set.

Alert (ALERT)

The ALERT flag is set when the I2C peripheral is configured as a host (SMBHEN = 1), the SMBALERT# signal detection is enabled (ALERTEN = 1), and a falling edge is detected on the SMBA pin. An interrupt is generated if the ERRIE bit of the I2C_CR1 register is set.

27.5 I2C in low-power modes

Table 171. Effect of low-power modes to I2C

Mode	Description
Sleep	No effect. I2C interrupts cause the device to exit the Sleep mode.
Stop(1)	The contents of I2C registers are kept. – WUPEN = 1 and I2C is clocked by an internal oscillator (HSI). The address recognition is functional. The I2C address match condition causes the device to exit the Stop mode. – WUPEN = 0: the I2C must be disabled before entering Stop mode.
Standby	The I2C peripheral is powered down. It must be reinitialized after exiting Standby mode.

1. Refer to *Section 27.3: I2C implementation* for information about the Stop modes supported by each instance. If the wake-up from a specific stop mode is not supported, the instance must be disabled before entering that specific Stop mode.

27.6 I2C interrupts

The following table gives the list of I2C interrupt requests.

Table 172. I2C interrupt requests

Interrupt acronym	Interrupt event	Event flag	Enable control bit	Interrupt clear method	Exit Sleep mode	Exit Stop modes	Exit Standby modes
I2C_EV	Receive buffer not empty	RXNE	RXIE	Read I2C_RXDR register	Yes	No	No
	Transmit buffer interrupt status	TXIS	TXIE	Write I2C_TXDR register			
	STOP detection interrupt flag	STOPF	STOPIE	Write STOPCF = 1			
	Transfer complete reload	TCR	TCIE	Write I2C_CR2 with NBYTES[7:0] ≠ 0			
	Transfer complete	TC		Write START = 1 or STOP = 1			
	Address matched	ADDR	ADDRIE	Write ADDRCF = 1		Yes(1)	
	NACK reception	NACKF	NACKIE	Write NACKCF = 1		No	
I2C_ERR	Bus error	BERR	ERRIE	Write BERRCF = 1	Yes	No	No
	Arbitration loss	ARLO		Write ARLOCF = 1			
	Overrun/underrun	OVR		Write OVRCF = 1			
I2C_ERR	PEC error	PECERR	ERRIE	Write PECERRCF = 1	Yes	No	No
	Timeout/ t_{LOW} error	TIMEOUT		Write TIMEOUTCF = 1			
	SMBus alert	ALERT		Write ALERTCF = 1			

1. The ADDR match event can wake up the device from Stop mode only if the I2C instance supports the wake-up from Stop mode feature. Refer to *Section 27.3: I2C implementation*.

27.7 I2C DMA requests

27.7.1 Transmission using DMA

DMA (direct memory access) can be enabled for transmission by setting the TXDMAEN bit of the I2C_CR1 register. Data is loaded from an SRAM area configured through the DMA peripheral (see *Section 11: Direct memory access controller (DMA)*) to the I2C_TXDR register whenever the TXIS bit is set.

Only the data are transferred with DMA.

In controller mode, the initialization, the target address, direction, number of bytes and START bit are programmed by software (the transmitted target address cannot be transferred with DMA). When all data are transferred using DMA, DMA must be initialized before setting the START bit. The end of transfer is managed with the NBYTES counter. Refer to *Controller transmitter*.

In target mode:

- With NOSTRETCH = 0, when all data are transferred using DMA, DMA must be initialized before the address match event, or in ADDR interrupt subroutine, before clearing ADDR.
- With NOSTRETCH = 1, the DMA must be initialized before the address match event.

The PEC transfer is managed with the counter associated to the NBYTES[7:0] bitfield. Refer to *SMBus target transmitter* and *SMBus controller transmitter*.

Note: If DMA is used for transmission, it is not required to set the TXIE bit.

27.7.2 Reception using DMA

DMA (direct memory access) can be enabled for reception by setting the RXDMAEN bit of the I2C_CR1 register. Data is loaded from the I2C_RXDR register to an SRAM area configured through the DMA peripheral (refer to *Section 11: Direct memory access controller (DMA)*) whenever the RXNE bit is set. Only the data (including PEC) are transferred with DMA.

In controller mode, the initialization, the target address, direction, number of bytes and START bit are programmed by software. When all data are transferred using DMA, DMA must be initialized before setting the START bit. The end of transfer is managed with the NBYTES counter.

In target mode with NOSTRETCH = 0, when all data are transferred using DMA, DMA must be initialized before the address match event, or in the ADDR interrupt subroutine, before clearing the ADDR flag.

The PEC transfer is managed with the counter associated to the NBYTES[7:0] bitfield. Refer to *SMBus target receiver* and *SMBus controller receiver*.

Note: If DMA is used for reception, it is not required to set the RXIE bit.

27.8 I2C debug modes

When the device enters debug mode (core halted), the SMBus timeout either continues working normally or stops, depending on the DBG_I2C1_STOP bit in the DBG block.

27.9 I2C registers

Refer to *Section 1.2* for the list of abbreviations used in register descriptions.

The registers are accessed by words (32-bit).

27.9.1 I2C control register 1 (I2C_CR1)

Address offset: 0x00

Reset value: 0x0000 0000

Access: no wait states, except if a write access occurs while a write access is ongoing. In this case, wait states are inserted in the second write access, until the previous one is completed. The latency of the second write access can be up to 2 x PCLK1 + 6 x I2CCLK.

31	30	29	28	27	26	25	24	23	22	21	20	19	18	17	16
Res.	Res.	Res.	Res.	Res.	Res.	Res.	Res.	PECEN	ALERTEN	SMBDEN	SMBHEN	GCEN	WUPEN	NOSTRETCH	SBC
								rw	rw	rw	rw	rw	rw	rw	rw

15	14	13	12	11	10	9	8	7	6	5	4	3	2	1	0
RXDMAEN	TXDMAEN	Res.	ANFOFF	DNF[3:0]				ERRIE	TCIE	STOPIE	NACKIE	ADDRIE	RXIE	TXIE	PE
rw	rw		rw	rw	rw	rw	rw	rw	rw	rw	rw	rw	rw	rw	rw

Bits 31:24 Reserved, must be kept at reset value.

Bit 23 **PECEN:** PEC enable

0: PEC calculation disabled
1: PEC calculation enabled

Bit 22 **ALERTEN**: SMBus alert enable

0: The SMBALERT# signal on SMBA pin is not supported in host mode (SMBHEN = 1). In device mode (SMBHEN = 0), the SMBA pin is released and the alert response address header is disabled (0001100x followed by NACK).
1: The SMBALERT# signal on SMBA pin is supported in host mode (SMBHEN = 1). In device mode (SMBHEN = 0), the SMBA pin is driven low and the alert response address header is enabled (0001100x followed by ACK).

Note: When ALERTEN = 0, the SMBA pin can be used as a standard GPIO.

Bit 21 **SMBDEN**: SMBus device default address enable

0: Device default address disabled. Address 0b1100001x is NACKed.
1: Device default address enabled. Address 0b1100001x is ACKed.

Bit 20 **SMBHEN**: SMBus host address enable

0: Host address disabled. Address 0b0001000x is NACKed.
1: Host address enabled. Address 0b0001000x is ACKed.

Bit 19 **GCEN**: General call enable

0: General call disabled. Address 0b00000000 is NACKed.
1: General call enabled. Address 0b00000000 is ACKed.

Bit 18 **WUPEN**: Wake-up from Stop mode enable

0: Wake-up from Stop mode disabled.
1: Wake-up from Stop mode enabled.

Note: WUPEN can be set only when DNF[3:0] = 0000.

Bit 17 **NOSTRETCH**: Clock stretching disable

This bit is used to disable clock stretching in target mode. It must be kept cleared in controller mode.

0: Clock stretching enabled

1: Clock stretching disabled

Note: This bit can be programmed only when the I2C peripheral is disabled (PE = 0).

Bit 16 **SBC**: Target byte control

This bit is used to enable hardware byte control in target mode.

0: Target byte control disabled

1: Target byte control enabled

Bit 15 **RXDMAEN**: DMA reception requests enable

0: DMA mode disabled for reception

1: DMA mode enabled for reception

Bit 14 **TXDMAEN**: DMA transmission requests enable

0: DMA mode disabled for transmission

1: DMA mode enabled for transmission

Bit 13 Reserved, must be kept at reset value.

Bit 12 **ANFOFF:** Analog noise filter OFF

0: Analog noise filter enabled

1: Analog noise filter disabled

Note: This bit can be programmed only when the I2C peripheral is disabled (PE = 0).

Bits 11:8 **DNF[3:0]**: Digital noise filter

These bits are used to configure the digital noise filter on SDA and SCL input. The digital filter, filters spikes with a length of up to DNF[3:0] * t_{I2CCLK}

0000: Digital filter disabled

0001: Digital filter enabled and filtering capability up to one t_{I2CCLK}

...

1111: digital filter enabled and filtering capability up to fifteen t_{I2CCLK}

Note: If the analog filter is enabled, the digital filter is added to it. This filter can be programmed only when the I2C peripheral is disabled (PE = 0).

Bit 7 **ERRIE**: Error interrupts enable

0: Error detection interrupts disabled

1: Error detection interrupts enabled

Note: Any of these errors generates an interrupt:

- arbitration loss (ARLO)

- bus error detection (BERR)

- overrun/underrun (OVR)

- timeout detection (TIMEOUT)

- PEC error detection (PECERR)

- alert pin event detection (ALERT)

Bit 6 **TCIE**: Transfer complete interrupt enable

0: Transfer complete interrupt disabled

1: Transfer complete interrupt enabled

Note: Any of these events generates an interrupt:

Transfer complete (TC)

Transfer complete reload (TCR)

Bit 5 **STOPIE**: STOP detection interrupt enable
0: STOP detection (STOPF) interrupt disabled
1: STOP detection (STOPF) interrupt enabled

Bit 4 **NACKIE**: Not acknowledge received interrupt enable
0: Not acknowledge (NACKF) received interrupts disabled
1: Not acknowledge (NACKF) received interrupts enabled

Bit 3 **ADDRIE**: Address match interrupt enable (target only)
0: Address match (ADDR) interrupts disabled
1: Address match (ADDR) interrupts enabled

Bit 2 **RXIE**: RX interrupt enable
0: Receive (RXNE) interrupt disabled
1: Receive (RXNE) interrupt enabled

Bit 1 **TXIE**: TX interrupt enable
0: Transmit (TXIS) interrupt disabled
1: Transmit (TXIS) interrupt enabled

Bit 0 **PE**: Peripheral enable
0: Peripheral disabled
1: Peripheral enabled

Note: When PE = 0, the I2C SCL and SDA lines are released. Internal state machines and status bits are put back to their reset value. When cleared, PE must be kept low for at least three APB clock cycles.

27.9.2 I2C control register 2 (I2C_CR2)

Address offset: 0x04

Reset value: 0x0000 0000

Access: no wait states, except if a write access occurs while a write access is ongoing. In this case, wait states are inserted in the second write access until the previous one is completed. The latency of the second write access can be up to 2 x PCLK1 + 6 x I2CCLK.

31	30	29	28	27	26	25	24	23	22	21	20	19	18	17	16
Res.	Res.	Res.	Res.	Res.	PECBYTE	AUTOEND	RELOAD	NBYTES[7:0]							
					rs	rw	rw	rw	rw	rw	rw	rw	rw	rw	rw
15	14	13	12	11	10	9	8	7	6	5	4	3	2	1	0
NACK	STOP	START	HEAD10R	ADD10	RD_WRN	SADD[9:0]									
rs	rs	rs	rw	rw	rw	rw	rw	rw	rw	rw	rw	rw	rw	rw	rw

Bits 31:27 Reserved, must be kept at reset value.

Bit 26 **PECBYTE**: Packet error checking byte
This bit is set by software, and cleared by hardware when the PEC is transferred, or when a STOP condition or an Address matched is received, also when PE = 0.
0: No PEC transfer
1: PEC transmission/reception is requested

Note: Writing 0 to this bit has no effect.
This bit has no effect when RELOAD is set, and in target mode when SBC = 0.

Bit 25 **AUTOEND**: Automatic end mode (controller mode)

This bit is set and cleared by software.

0: software end mode: TC flag is set when NBYTES data are transferred, stretching SCL low.

1: Automatic end mode: a STOP condition is automatically sent when NBYTES data are transferred.

Note: This bit has no effect in target mode or when the RELOAD bit is set.

Bit 24 **RELOAD**: NBYTES reload mode

This bit is set and cleared by software.

0: The transfer is completed after the NBYTES data transfer (STOP or RESTART follows).

1: The transfer is not completed after the NBYTES data transfer (NBYTES is reloaded). TCR flag is set when NBYTES data are transferred, stretching SCL low.

Bits 23:16 **NBYTES[7:0]**: Number of bytes

The number of bytes to be transmitted/received is programmed there. This field is don't care in target mode with SBC = 0.

Note: Changing these bits when the START bit is set is not allowed.

Bit 15 **NACK**: NACK generation (target mode)

The bit is set by software, cleared by hardware when the NACK is sent, or when a STOP condition or an Address matched is received, or when PE = 0.

0: an ACK is sent after current received byte.

1: a NACK is sent after current received byte.

Note: Writing 0 to this bit has no effect.

This bit is used only in target mode: in controller receiver mode, NACK is automatically generated after last byte preceding STOP or RESTART condition, whatever the NACK bit value.

When an overrun occurs in target receiver NOSTRETCH mode, a NACK is automatically generated, whatever the NACK bit value.

When hardware PEC checking is enabled (PECBYTE = 1), the PEC acknowledge value does not depend on the NACK value.

Bit 14 **STOP**: STOP condition generation

This bit only pertains to controller mode. It is set by software and cleared by hardware when a STOP condition is detected or when PE = 0.

0: No STOP generation

1: STOP generation after current byte transfer

Note: Writing 0 to this bit has no effect.

Bit 13 **START**: START condition generation

This bit is set by software. It is cleared by hardware after the START condition followed by the address sequence is sent, by an arbitration loss, by a timeout error detection, or when PE = 0. It can also be cleared by software, by setting the ADDRCF bit of the I2C_ICR register.

0: No START generation

1: RESTART/START generation:

If the I2C is already in controller mode with AUTOEND = 0, setting this bit generates a repeated START condition when RELOAD = 0, after the end of the NBYTES transfer.

Otherwise, setting this bit generates a START condition once the bus is free.

Note: Writing 0 to this bit has no effect.

The START bit can be set even if the bus is BUSY or I2C is in target mode.

This bit has no effect when RELOAD is set.

Bit 12 **HEAD10R**: 10-bit address header only read direction (controller receiver mode)

0: The controller sends the complete 10-bit target address read sequence: START + 2 bytes 10-bit address in write direction + RESTART + first seven bits of the 10-bit address in read direction.

1: The controller sends only the first seven bits of the 10-bit address, followed by read direction.

Note: Changing this bit when the START bit is set is not allowed.

Bit 11 **ADD10**: 10-bit addressing mode (controller mode)

0: The controller operates in 7-bit addressing mode

1: The controller operates in 10-bit addressing mode

Note: Changing this bit when the START bit is set is not allowed.

Bit 10 **RD_WRN**: Transfer direction (controller mode)

0: Controller requests a write transfer

1: Controller requests a read transfer

Note: Changing this bit when the START bit is set is not allowed.

Bits 9:0 **SADD[9:0]**: Target address (controller mode)

Condition: In 7-bit addressing mode (ADD10 = 0):

SADD[7:1] must be written with the 7-bit target address to be sent. Bits SADD[9], SADD[8] and SADD[0] are don't care.

Condition: In 10-bit addressing mode (ADD10 = 1):

SADD[9:0] must be written with the 10-bit target address to be sent.

Note: Changing these bits when the START bit is set is not allowed.

27.9.3 I2C own address 1 register (I2C_OAR1)

Address offset: 0x08

Reset value: 0x0000 0000

Access: no wait states, except if a write access occurs while a write access is ongoing. In this case, wait states are inserted in the second write access until the previous one is completed. The latency of the second write access can be up to 2 x PCLK1 + 6 x I2CCLK.

31	30	29	28	27	26	25	24	23	22	21	20	19	18	17	16
Res.	Res.	Res.	Res.	Res.	Res.	Res.	Res.	Res.	Res.	Res.	Res.	Res.	Res.	Res.	Res.
15	14	13	12	11	10	9	8	7	6	5	4	3	2	1	0
OA1EN	Res.	Res.	Res.	Res.	OA1MODE	OA1[9:0]									
rw					rw	rw	rw	rw	rw	rw	rw	rw	rw	rw	rw

Bits 31:16 Reserved, must be kept at reset value.

Bit 15 **OA1EN**: Own address 1 enable

0: Own address 1 disabled. The received target address OA1 is NACKed.

1: Own address 1 enabled. The received target address OA1 is ACKed.

Bits 14:11 Reserved, must be kept at reset value.

Bit 10 **OA1MODE**: Own address 1 10-bit mode

0: Own address 1 is a 7-bit address.

1: Own address 1 is a 10-bit address.

Note: This bit can be written only when OA1EN = 0.

Bits 9:0 **OA1[9:0]**: Interface own target address

7-bit addressing mode: OA1[7:1] contains the 7-bit own target address. Bits OA1[9], OA1[8] and OA1[0] are don't care.

10-bit addressing mode: OA1[9:0] contains the 10-bit own target address.

Note: These bits can be written only when OA1EN = 0.

27.9.4 I2C own address 2 register (I2C_OAR2)

Address offset: 0x0C

Reset value: 0x0000 0000

Access: no wait states, except if a write access occurs while a write access is ongoing. In this case, wait states are inserted in the second write access, until the previous one is completed. The latency of the second write access can be up to 2x PCLK1 + 6 x I2CCLK.

31	30	29	28	27	26	25	24	23	22	21	20	19	18	17	16
Res.	Res.	Res.	Res.	Res.	Res.	Res.	Res.	Res.	Res.	Res.	Res.	Res.	Res.	Res.	Res.

15	14	13	12	11	10	9	8	7	6	5	4	3	2	1	0
OA2EN	Res.	Res.	Res.	Res.	OA2MSK[2:0]			OA2[7:1]							Res.
rw					rw	rw	rw	rw	rw	rw	rw	rw	rw	rw	

Bits 31:16 Reserved, must be kept at reset value.

Bit 15 **OA2EN**: Own address 2 enable

0: Own address 2 disabled. The received target address OA2 is NACKed.

1: Own address 2 enabled. The received target address OA2 is ACKed.

Bits 14:11 Reserved, must be kept at reset value.

Bits 10:8 **OA2MSK[2:0]**: Own address 2 masks

000: No mask

001: OA2[1] is masked and don’t care. Only OA2[7:2] are compared.

010: OA2[2:1] are masked and don’t care. Only OA2[7:3] are compared.

011: OA2[3:1] are masked and don’t care. Only OA2[7:4] are compared.

100: OA2[4:1] are masked and don’t care. Only OA2[7:5] are compared.

101: OA2[5:1] are masked and don’t care. Only OA2[7:6] are compared.

110: OA2[6:1] are masked and don’t care. Only OA2[7] is compared.

111: OA2[7:1] are masked and don’t care. No comparison is done, and all (except reserved) 7-bit received addresses are acknowledged.

Note: These bits can be written only when OA2EN = 0.

As soon as OA2MSK ≠ 0, the reserved I2C addresses (0b0000xxx and 0b1111xxx) are not acknowledged, even if the comparison matches.

Bits 7:1 **OA2[7:1]**: Interface address

7-bit addressing mode: 7-bit address

Note: These bits can be written only when OA2EN = 0.

Bit 0 Reserved, must be kept at reset value.

27.9.5 I2C timing register (I2C_TIMINGR)

Address offset: 0x10

Reset value: 0x0000 0000

Access: no wait states

31	30	29	28	27	26	25	24	23	22	21	20	19	18	17	16
PRESC[3:0]				Res.	Res.	Res.	Res.	SCLDEL[3:0]				SDADEL[3:0]			
rw	rw	rw	rw					rw	rw	rw	rw	rw	rw	rw	rw
15	14	13	12	11	10	9	8	7	6	5	4	3	2	1	0
SCLH[7:0]								SCLL[7:0]							
rw	rw	rw	rw	rw	rw	rw	rw	rw	rw	rw	rw	rw	rw	rw	rw

Bits 31:28 **PRESC[3:0]**: Timing prescaler

This field is used to prescale I2CCLK to generate the clock period t_{PRESC} used for data setup and hold counters (refer to section *I2C timings*), and for SCL high and low level counters (refer to section *I2C controller initialization*).

t_{PRESC} = (PRESC + 1) x t_{I2CCLK}

Bits 27:24 Reserved, must be kept at reset value.

Bits 23:20 **SCLDEL[3:0]**: Data setup time

This field is used to generate a delay t_{SCLDEL} = (SCLDEL + 1) x t_{PRESC} between SDA edge and SCL rising edge. In controller and in target modes with NOSTRETCH = 0, the SCL line is stretched low during t_{SCLDEL}.

Note: t_{SCLDEL} is used to generate $t_{SU:DAT}$ timing.

Bits 19:16 **SDADEL[3:0]**: Data hold time

This field is used to generate the delay t_{SDADEL} between SCL falling edge and SDA edge. In controller and in target modes with NOSTRETCH = 0, the SCL line is stretched low during t_{SDADEL}.

t_{SDADEL}= SDADEL x t_{PRESC}

Note: SDADEL is used to generate $t_{HD:DAT}$ timing.

Bits 15:8 **SCLH[7:0]**: SCL high period (controller mode)

This field is used to generate the SCL high period in controller mode.

t_{SCLH} = (SCLH + 1) x t_{PRESC}

Note: SCLH is also used to generate $t_{SU:STO}$ and $t_{HD:STA}$ timing.

Bits 7:0 **SCLL[7:0]**: SCL low period (controller mode)

This field is used to generate the SCL low period in controller mode.

t_{SCLL} = (SCLL + 1) x t_{PRESC}

Note: SCLL is also used to generate t_{BUF} and $t_{SU:STA}$ timings.

Note: This register must be configured when the I2C peripheral is disabled (PE = 0).

Note: The STM32CubeMX tool calculates and provides the I2C_TIMINGR content in the I2C Configuration window.

27.9.6 I2C timeout register (I2C_TIMEOUTR)

Address offset: 0x14

Reset value: 0x0000 0000

Access: no wait states, except if a write access occurs while a write access is ongoing. In this case, wait states are inserted in the second write access until the previous one is completed. The latency of the second write access can be up to 2 x PCLK1 + 6 x I2CCLK.

31	30	29	28	27	26	25	24	23	22	21	20	19	18	17	16
TEXTEN	Res.	Res.	Res.	TIMEOUTB[11:0]											
rw				rw	rw	rw	rw	rw	rw	rw	rw	rw	rw	rw	rw
15	14	13	12	11	10	9	8	7	6	5	4	3	2	1	0
TIMOUTEN	Res.	Res.	TIDLE	TIMEOUTA[11:0]											
rw			rw	rw	rw	rw	rw	rw	rw	rw	rw	rw	rw	rw	rw

Bit 31 **TEXTEN**: Extended clock timeout enable

0: Extended clock timeout detection is disabled

1: Extended clock timeout detection is enabled. When a cumulative SCL stretch for more than $t_{LOW:EXT}$ is done by the I2C interface, a timeout error is detected (TIMEOUT = 1).

Bits 30:28 Reserved, must be kept at reset value.

Bits 27:16 **TIMEOUTB[11:0]**: Bus timeout B

This field is used to configure the cumulative clock extension timeout:

– Controller mode: the controller cumulative clock low extend time ($t_{LOW:MEXT}$) is detected

– Target mode: the target cumulative clock low extend time ($t_{LOW:SEXT}$) is detected

$t_{LOW:EXT}$ = (TIMEOUTB + TIDLE = 01) x 2048 x t_{I2CCLK}

Note: These bits can be written only when TEXTEN = 0.

Bit 15 **TIMOUTEN**: Clock timeout enable

0: SCL timeout detection is disabled

1: SCL timeout detection is enabled. When SCL is low for more than $t_{TIMEOUT}$ (TIDLE = 0) or high for more than t_{IDLE} (TIDLE = 1), a timeout error is detected (TIMEOUT = 1).

Bits 14:13 Reserved, must be kept at reset value.

Bit 12 **TIDLE**: Idle clock timeout detection

0: TIMEOUTA is used to detect SCL low timeout

1: TIMEOUTA is used to detect both SCL and SDA high timeout (bus idle condition)

Note: This bit can be written only when TIMOUTEN = 0.

Bits 11:0 **TIMEOUTA[11:0]**: Bus timeout A

This field is used to configure:

The SCL low timeout condition $t_{TIMEOUT}$ when TIDLE = 0

$t_{TIMEOUT}$= (TIMEOUTA + 1) x 2048 x t_{I2CCLK}

The bus idle condition (both SCL and SDA high) when TIDLE = 1

t_{IDLE}= (TIMEOUTA + 1) x 4 x t_{I2CCLK}

Note: These bits can be written only when TIMOUTEN = 0.

27.9.7 I2C interrupt and status register (I2C_ISR)

Address offset: 0x18

Reset value: 0x0000 0001

Access: no wait states

31	30	29	28	27	26	25	24	23	22	21	20	19	18	17	16
Res.	Res.	Res.	Res.	Res.	Res.	Res.	Res.	ADDCODE[6:0]							DIR
								r	r	r	r	r	r	r	r
15	14	13	12	11	10	9	8	7	6	5	4	3	2	1	0
BUSY	Res.	ALERT	TIMEOUT	PECERR	OVR	ARLO	BERR	TCR	TC	STOPF	NACKF	ADDR	RXNE	TXIS	TXE
r		r	r	r	r	r	r	r	r	r	r	r	r	rs	rs

Bits 31:24 Reserved, must be kept at reset value.

Bits 23:17 **ADDCODE[6:0]**: Address match code (target mode)

These bits are updated with the received address when an address match event occurs (ADDR = 1). In the case of a 10-bit address, ADDCODE provides the 10-bit header followed by the two MSBs of the address.

Bit 16 **DIR**: Transfer direction (target mode)

This flag is updated when an address match event occurs (ADDR = 1).

0: Write transfer, target enters receiver mode.

1: Read transfer, target enters transmitter mode.

Bit 15 **BUSY**: Bus busy

This flag indicates that a communication is in progress on the bus. It is set by hardware when a START condition is detected, and cleared by hardware when a STOP condition is detected, or when PE = 0.

Bit 14 Reserved, must be kept at reset value.

Bit 13 **ALERT**: SMBus alert

This flag is set by hardware when SMBHEN = 1 (SMBus host configuration), ALERTEN = 1 and an SMBALERT# event (falling edge) is detected on SMBA pin. It is cleared by software by setting the ALERTCF bit.

Note: This bit is cleared by hardware when PE = 0.

Bit 12 **TIMEOUT**: Timeout or t_{LOW} detection flag

This flag is set by hardware when a timeout or extended clock timeout occurred. It is cleared by software by setting the TIMEOUTCF bit.

Note: This bit is cleared by hardware when PE = 0.

Bit 11 **PECERR**: PEC error in reception

This flag is set by hardware when the received PEC does not match with the PEC register content. A NACK is automatically sent after the wrong PEC reception. It is cleared by software by setting the PECCF bit.

Note: This bit is cleared by hardware when PE = 0.

Bit 10 **OVR**: Overrun/underrun (target mode)

This flag is set by hardware in target mode with NOSTRETCH = 1, when an overrun/underrun error occurs. It is cleared by software by setting the OVRCF bit.

Note: This bit is cleared by hardware when PE = 0.

Bit 9 **ARLO**: Arbitration lost

This flag is set by hardware in case of arbitration loss. It is cleared by software by setting the ARLOCF bit.

Note: This bit is cleared by hardware when PE = 0.

Bit 8 **BERR**: Bus error

This flag is set by hardware when a misplaced START or STOP condition is detected whereas the peripheral is involved in the transfer. The flag is not set during the address phase in target mode. It is cleared by software by setting the BERRCF bit.

Note: This bit is cleared by hardware when PE = 0.

Bit 7 **TCR**: Transfer complete reload

This flag is set by hardware when RELOAD = 1 and NBYTES data have been transferred. It is cleared by software when NBYTES is written to a non-zero value.

Note: This bit is cleared by hardware when PE = 0.

This flag is only for controller mode, or for target mode when the SBC bit is set.

Bit 6 **TC**: Transfer complete (controller mode)

This flag is set by hardware when RELOAD = 0, AUTOEND = 0 and NBYTES data have been transferred. It is cleared by software when START bit or STOP bit is set.

Note: This bit is cleared by hardware when PE = 0.

Bit 5 **STOPF**: STOP detection flag

This flag is set by hardware when a STOP condition is detected on the bus and the peripheral is involved in this transfer:

- as a controller, provided that the STOP condition is generated by the peripheral.
- as a target, provided that the peripheral has been addressed previously during this transfer.

It is cleared by software by setting the STOPCF bit.

Note: This bit is cleared by hardware when PE = 0.

Bit 4 **NACKF**: Not acknowledge received flag

This flag is set by hardware when a NACK is received after a byte transmission. It is cleared by software by setting the NACKCF bit.

Note: This bit is cleared by hardware when PE = 0.

Bit 3 **ADDR**: Address matched (target mode)

This bit is set by hardware as soon as the received target address matched with one of the enabled target addresses. It is cleared by software by setting *ADDRCF bit.*

Note: This bit is cleared by hardware when PE = 0.

Bit 2 **RXNE**: Receive data register not empty (receivers)

This bit is set by hardware when the received data is copied into the I2C_RXDR register, and is ready to be read. It is cleared when I2C_RXDR is read.

Note: This bit is cleared by hardware when PE = 0.

Bit 1 **TXIS**: Transmit interrupt status (transmitters)

This bit is set by hardware when the I2C_TXDR register is empty and the data to be transmitted must be written in the I2C_TXDR register. It is cleared when the next data to be sent is written in the I2C_TXDR register.

This bit can be written to 1 by software only when NOSTRETCH = 1, to generate a TXIS event (interrupt if TXIE = 1 or DMA request if TXDMAEN = 1).

Note: This bit is cleared by hardware when PE = 0.

Bit 0 **TXE**: Transmit data register empty (transmitters)

This bit is set by hardware when the I2C_TXDR register is empty. It is cleared when the next data to be sent is written in the I2C_TXDR register.

This bit can be written to 1 by software in order to flush the transmit data register I2C_TXDR.

Note: This bit is set by hardware when PE = 0.

27.9.8 I2C interrupt clear register (I2C_ICR)

Address offset: 0x1C

Reset value: 0x0000 0000

Access: no wait states

31	30	29	28	27	26	25	24	23	22	21	20	19	18	17	16
Res.	Res.	Res.	Res.	Res.	Res.	Res.	Res.	Res.	Res.	Res.	Res.	Res.	Res.	Res.	Res.
15	14	13	12	11	10	9	8	7	6	5	4	3	2	1	0
Res.	Res.	ALERTCF	TIMOUTCF	PECCF	OVRCF	ARLOCF	BERRCF	Res.	Res.	STOPCF	NACKCF	ADDRCF	Res.	Res.	Res.
		w	w	w	w	w	w			w	w	w			

Bits 31:14 Reserved, must be kept at reset value.

Bit 13 **ALERTCF**: Alert flag clear

Writing 1 to this bit clears the ALERT flag in the I2C_ISR register.

Bit 12 **TIMOUTCF**: Timeout detection flag clear

Writing 1 to this bit clears the TIMEOUT flag in the I2C_ISR register.

Bit 11 **PECCF**: PEC error flag clear

Writing 1 to this bit clears the PECERR flag in the I2C_ISR register.

Bit 10 **OVRCF**: Overrun/underrun flag clear

Writing 1 to this bit clears the OVR flag in the I2C_ISR register.

Bit 9 **ARLOCF**: Arbitration lost flag clear

Writing 1 to this bit clears the ARLO flag in the I2C_ISR register.

Bit 8 **BERRCF**: Bus error flag clear

Writing 1 to this bit clears the BERRF flag in the I2C_ISR register.

Bits 7:6 Reserved, must be kept at reset value.

Bit 5 **STOPCF**: STOP detection flag clear

Writing 1 to this bit clears the STOPF flag in the I2C_ISR register.

Bit 4 **NACKCF**: Not acknowledge flag clear

Writing 1 to this bit clears the NACKF flag in I2C_ISR register.

Bit 3 **ADDRCF**: Address matched flag clear

Writing 1 to this bit clears the ADDR flag in the I2C_ISR register. Writing 1 to this bit also clears the START bit in the I2C_CR2 register.

Bits 2:0 Reserved, must be kept at reset value.

27.9.9 I2C PEC register (I2C_PECR)

Address offset: 0x20

Reset value: 0x0000 0000

Access: no wait states

31	30	29	28	27	26	25	24	23	22	21	20	19	18	17	16
Res.	Res.	Res.	Res.	Res.	Res.	Res.	Res.	Res.	Res.	Res.	Res.	Res.	Res.	Res.	Res.

15	14	13	12	11	10	9	8	7	6	5	4	3	2	1	0
Res.	Res.	Res.	Res.	Res.	Res.	Res.	Res.	PEC[7:0]							
								r	r	r	r	r	r	r	r

Bits 31:8 Reserved, must be kept at reset value.

Bits 7:0 **PEC[7:0]:** Packet error checking register
This field contains the internal PEC when PECEN=1.
The PEC is cleared by hardware when PE = 0.

27.9.10 I2C receive data register (I2C_RXDR)

Address offset: 0x24

Reset value: 0x0000 0000

Access: no wait states

31	30	29	28	27	26	25	24	23	22	21	20	19	18	17	16
Res.	Res.	Res.	Res.	Res.	Res.	Res.	Res.	Res.	Res.	Res.	Res.	Res.	Res.	Res.	Res.

15	14	13	12	11	10	9	8	7	6	5	4	3	2	1	0
Res.	Res.	Res.	Res.	Res.	Res.	Res.	Res.	RXDATA[7:0]							
								r	r	r	r	r	r	r	r

Bits 31:8 Reserved, must be kept at reset value.

Bits 7:0 **RXDATA[7:0]:** 8-bit receive data
Data byte received from the I²C-bus.

27.9.11 I2C transmit data register (I2C_TXDR)

Address offset: 0x28

Reset value: 0x0000 0000

Access: no wait states

31	30	29	28	27	26	25	24	23	22	21	20	19	18	17	16
Res.	Res.	Res.	Res.	Res.	Res.	Res.	Res.	Res.	Res.	Res.	Res.	Res.	Res.	Res.	Res.

15	14	13	12	11	10	9	8	7	6	5	4	3	2	1	0
Res.	Res.	Res.	Res.	Res.	Res.	Res.	Res.	TXDATA[7:0]							
								rw	rw	rw	rw	rw	rw	rw	rw

Bits 31:8 Reserved, must be kept at reset value.

Bits 7:0 **TXDATA[7:0]:** 8-bit transmit data

Data byte to be transmitted to the I²C-bus

Note: These bits can be written only when TXE = 1.

27.9.12 I2C register map

The table below provides the I2C register map and the reset values.

Table 173. I2C register map and reset values

Offset	Register name	31	30	29	28	27	26	25	24	23	22	21	20	19	18	17	16	15	14	13	12	11	10	9	8	7	6	5	4	3	2	1	0
0x00	I2C_CR1	Res.	Res.	Res.	Res.	Res.	Res.	Res.	Res.	PECEN	ALERTEN	SMBDEN	SMBHEN	GCEN	WUPEN	NOSTRETCH	SBC	RXDMAEN	TXDMAEN	Res.	ANFOFF	DNF[3:0]				ERRIE	TCIE	STOPIE	NACKIE	ADDRIE	RXIE	TXIE	PE
	Reset value									0	0	0	0	0	0	0	0	0	0		0	0	0	0	0	0	0	0	0	0	0	0	0
0x04	I2C_CR2	Res.	Res.	Res.	Res.	Res.	PECBYTE	AUTOEND	RELOAD	NBYTES[7:0]								NACK	STOP	START	HEAD10R	ADD10	RD_WRN	SADD[9:0]									
	Reset value						0	0	0	0	0	0	0	0	0	0	0	0	0	0	0	0	0	0	0	0	0	0	0	0	0	0	0
0x08	I2C_OAR1	Res.	Res.	Res.	Res.	Res.	Res.	Res.	Res.	Res.	Res.	Res.	Res.	Res.	Res.	Res.	Res.	OA1EN	Res.	Res.	Res.	Res.	OA1MODE	OA1[9:0]									
	Reset value																	0					0	0	0	0	0	0	0	0	0	0	0
0x0C	I2C_OAR2	Res.	Res.	Res.	Res.	Res.	Res.	Res.	Res.	Res.	Res.	Res.	Res.	Res.	Res.	Res.	Res.	OA2EN	Res.	Res.	Res.	Res.	OA2MSK [2:0]			OA2[7:1]							Res.
	Reset value																	0					0	0	0	0	0	0	0	0	0	0	
0x10	I2C_TIMINGR	PRESC[3:0]				Res.	Res.	Res.	Res.	SCLDEL [3:0]				SDADEL [3:0]				SCLH[7:0]								SCLL[7:0]							
	Reset value	0	0	0	0					0	0	0	0	0	0	0	0	0	0	0	0	0	0	0	0	0	0	0	0	0	0	0	0
0x14	I2C_TIMEOUTR	TEXTEN	Res.	Res.	Res.	TIMEOUTB[11:0]												TIMOUTEN	Res.	Res.	TIDLE	TIMEOUTA[11:0]											
	Reset value	0				0	0	0	0	0	0	0	0	0	0	0	0	0			0	0	0	0	0	0	0	0	0	0	0	0	0
0x18	I2C_ISR	Res.	Res.	Res.	Res.	Res.	Res.	Res.	Res.	ADDCODE[6:0]							DIR	BUSY	Res.	ALERT	TIMEOUT	PECERR	OVR	ARLO	BERR	TCR	TC	STOPF	NACKF	ADDR	RXNE	TXIS	TXE
	Reset value									0	0	0	0	0	0	0	0	0		0	0	0	0	0	0	0	0	0	0	0	0	0	1
0x1C	I2C_ICR	Res.	Res.	Res.	Res.	Res.	Res.	Res.	Res.	Res.	Res.	Res.	Res.	Res.	Res.	Res.	Res.	Res.	Res.	ALERTCF	TIMOUTCF	PECCF	OVRCF	ARLOCF	BERRCF	Res.	Res.	STOPCF	NACKCF	ADDRCF	Res.	Res.	Res.
	Reset value																			0	0	0	0	0	0			0	0	0			
0x20	I2C_PECR	Res.	Res.	Res.	Res.	Res.	Res.	Res.	Res.	Res.	Res.	Res.	Res.	Res.	Res.	Res.	Res.	Res.	Res.	Res.	Res.	Res.	Res.	Res.	Res.	PEC[7:0]							
	Reset value																									0	0	0	0	0	0	0	0
0x24	I2C_RXDR	Res.	Res.	Res.	Res.	Res.	Res.	Res.	Res.	Res.	Res.	Res.	Res.	Res.	Res.	Res.	Res.	Res.	Res.	Res.	Res.	Res.	Res.	Res.	Res.	RXDATA[7:0]							
	Reset value																									0	0	0	0	0	0	0	0
0x28	I2C_TXDR	Res.	Res.	Res.	Res.	Res.	Res.	Res.	Res.	Res.	Res.	Res.	Res.	Res.	Res.	Res.	Res.	Res.	Res.	Res.	Res.	Res.	Res.	Res.	Res.	TXDATA[7:0]							
	Reset value																									0	0	0	0	0	0	0	0

Refer to *Section 2.2: Memory organization* for the register boundary addresses.

28 Universal synchronous/asynchronous receiver transmitter (USART/UART)

This section describes the universal synchronous asynchronous receiver transmitter (USART).

28.1 USART introduction

The USART offers a flexible means to perform Full-duplex data exchange with external equipments requiring an industry standard NRZ asynchronous serial data format. A very wide range of baud rates can be achieved through a fractional baud rate generator.

The USART supports both synchronous one-way and half-duplex single-wire communications, as well as LIN (local interconnection network), smartcard protocol, IrDA (infrared data association) SIR ENDEC specifications, and modem operations (CTS/RTS). Multiprocessor communications are also supported.

High-speed data communications are possible by using the DMA (direct memory access) for multibuffer configuration.

28.2 USART main features

- Full-duplex asynchronous communication
- NRZ standard format (mark/space)
- Configurable oversampling method by 16 or 8 to achieve the best compromise between speed and clock tolerance
- Baud rate generator systems
- Two internal FIFOs for transmit and receive data

  Each FIFO can be enabled/disabled by software and come with a status flag.
- A common programmable transmit and receive baud rate
- Dual clock domain with dedicated kernel clock for peripherals independent from PCLK
- Auto baud rate detection
- Programmable data word length (7, 8 or 9 bits)
- Programmable data order with MSB-first or LSB-first shifting
- Configurable stop bits (1 or 2 stop bits)
- Synchronous master/slave mode and clock output/input for synchronous communications
- SPI slave transmission underrun error flag
- Single-wire half-duplex communications
- Continuous communications using DMA
- Received/transmitted bytes are buffered in reserved SRAM using centralized DMA.
- Separate enable bits for transmitter and receiver
- Separate signal polarity control for transmission and reception
- Swappable Tx/Rx pin configuration
- Hardware flow control for modem and RS-485 transceiver
- Communication control/error detection flags
- Parity control:
  - Transmits parity bit
  - Checks parity of received data byte
- Interrupt sources with flags
- Multiprocessor communications: wake-up from mute mode by idle line detection or address mark detection
- Wake-up from Stop mode

28.3 USART extended features

- LIN master synchronous break send capability and LIN slave break detection capability
  - 13-bit break generation and 10/11 bit break detection when USART is hardware configured for LIN
- IrDA SIR encoder decoder supporting 3/16 bit duration for normal mode
- Smartcard mode
  - Supports the T = 0 and T = 1 asynchronous protocols for smartcards as defined in the ISO/IEC 7816-3 standard
  - 0.5 and 1.5 stop bits for smartcard operation
- Support for Modbus communication
  - Timeout feature
  - CR/LF character recognition

28.4 USART implementation

The table(s) below describe(s) USART implementation. It (they) also include(s) LPUART for comparison.

Table 174. USART / LPUART features

Modes / features(1)	USART1	LPUART1
Hardware flow control for modem	X	X
Continuous communication using DMA	X	X
Multiprocessor communication	X	X
Synchronous mode (Master/Slave)	X	-
Smartcard mode	X	-
Single-wire half-duplex communication	X	X
IrDA SIR ENDEC block	X	-
LIN mode	X	-
Dual clock domain and wake-up from low-power mode	X	X
Receiver timeout interrupt	X	-
Modbus communication	X	-
Auto baud rate detection	X	-
Driver Enable	X	X
USART data length	7, 8 and 9 bits	
Tx/Rx FIFO	X	X
Tx/Rx FIFO size	8	
Wake-up from low-power modes	X(2)	X(2)

1. X = supported.
2. Wake-up supported from Stop 0 and Stop 1 modes.

28.5 USART functional description

28.5.1 USART block diagram

Figure 246. USART block diagram

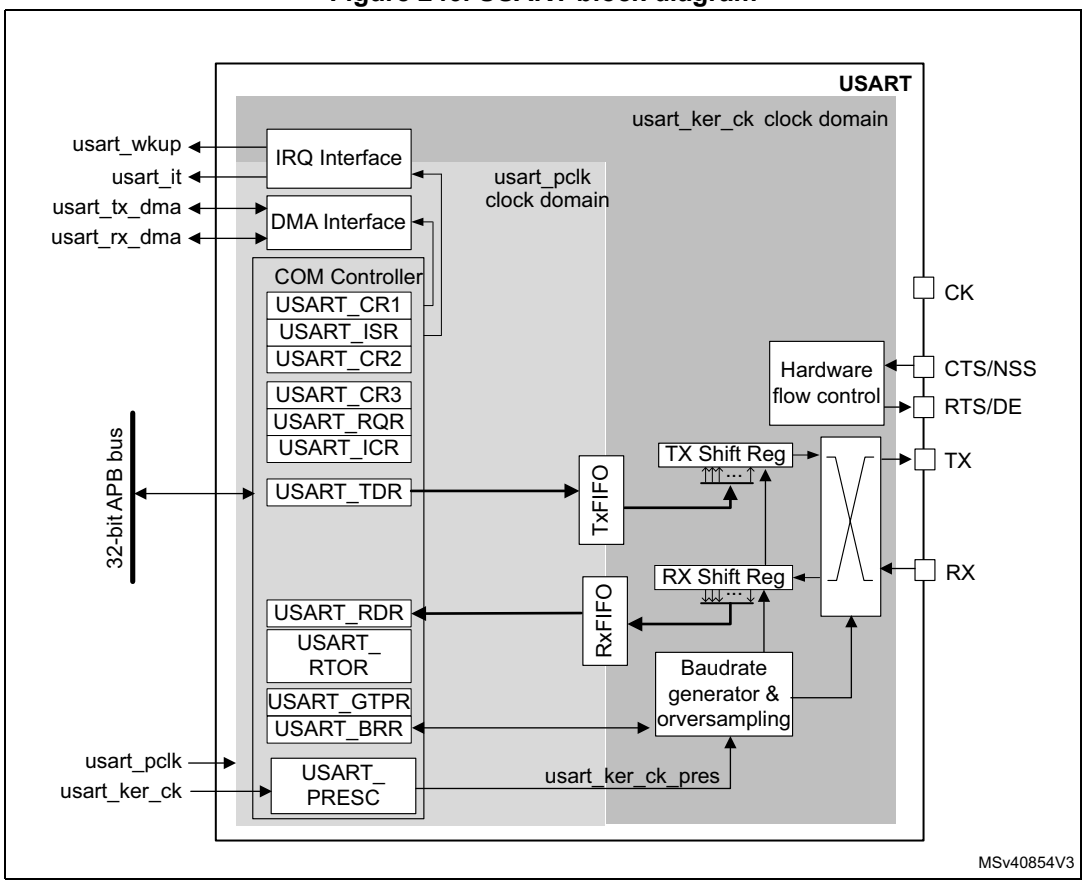

The simplified block diagram given in *Figure 246* shows two fully-independent clock domains:

- The **usart_pclk** clock domain

  The **usart_pclk** clock signal feeds the peripheral bus interface. It must be active when accesses to the USART registers are required.

- The **usart_ker_ck** kernel clock domain.

  The **usart_ker_ck** is the USART clock source. It is independent from **usart_pclk** and delivered by the RCC. The USART registers can consequently be written/read even when the **usart_ker_ck** clock is stopped.

  When the dual clock domain feature is disabled, the **usart_ker_ck** clock is the same as the **usart_pclk** clock.

There is no constraint between **usart_pclk** and **usart_ker_ck**: **usart_ker_ck** can be faster or slower than **usart_pclk**. The only limitation is the software ability to manage the communication fast enough.

When the USART operates in SPI slave mode, it handles data flow using the serial interface clock derived from the external CK signal provided by the external master SPI device. The **usart_ker_ck** clock must be at least 3 times faster than the clock on the CK input.

28.5.2 USART signals

USART bidirectional communications

USART bidirectional communications require a minimum of two pins: Receive Data In (RX) and Transmit Data Out (TX):

- **RX** (Receive Data Input)

  RX is the serial data input. Oversampling techniques are used for data recovery. They discriminate between valid incoming data and noise.

- **TX** (Transmit Data Output)

  When the transmitter is disabled, the output pin returns to its I/O port configuration. When the transmitter is enabled and no data needs to be transmitted, the TX pin is High. In single-wire and smartcard modes, this I/O is used to transmit and receive data.

RS232 hardware flow control mode

The following pins are required in RS232 hardware flow control mode:

- **CTS** (Clear To Send)

  When driven high, this signal blocks the data transmission at the end of the current transfer.

- **RTS** (Request To Send)

  When it is low, this signal indicates that the USART is ready to receive data.

RS485 hardware flow control mode

The following pin is required in RS485 hardware control mode:

- **DE** (Driver Enable)

  This signal activates the transmission mode of the external transceiver.

Synchronous SPI master/slave mode and smartcard mode

The following pin is required in synchronous master/slave mode and smartcard mode:

- **CK**

  This pin acts as clock output in synchronous SPI master and smartcard modes.

  It acts as clock input in synchronous SPI slave mode.

  In synchronous master mode, this pin outputs the transmitter data clock for synchronous transmission corresponding to SPI master mode (no clock pulses on start bit and stop bit, and a software option to send a clock pulse on the last data bit). In parallel, data can be received synchronously on RX pin. This mechanism can be used to control peripherals featuring shift registers (e.g. LCD drivers). The clock phase and polarity are software programmable.

  In smartcard mode, CK output provides the clock to the smartcard.

- **NSS**

  This pin acts as slave Select input in synchronous slave mode.

Refer to *Table 175* and *Table 176* for the list of USART input/output pins and internal signals.

Table 175. USART/UART input/output pins

Pin name	Signal type	Description
USART_RX/UART_RX	Input	Serial data receive input
USART_TX/UART_TX	Output	Transmit data output
USART_CTS(3)/UART_CTS	Input	Clear to send
USART_RTS(1)/UART_RTS(2)	Output	Request to send
USART_DE(1)/UART_DE(2)	Output	Driver enable
USART_CK(1)	Input/Output	Clock input in synchronous slave mode. Clock output in synchronous master and smartcard modes.
USART_NSS(3)	Input	Slave select input in synchronous slave mode.

1. USART_DE/USART_RTS share the same pin.
2. UART_DE/UART_RTS share the same pin.
3. USART_CTS and USART_NSS share the same pin.

Description of USART input/output signals

Table 176. USART internal input/output signals

Pin name	Signal type	Description
usart_pclk	Input	APB clock
usart_ker_ck	Input	USART kernel clock
usart_wkup	Output	USART provides a wake-up interrupt
usart_it	Output	USART global interrupt
usart_tx_dma	Input/output	USART transmit DMA request
usart_rx_dma	Input/output	USART receive DMA request

28.5.3 USART character description

The word length can be set to 7, 8 or 9 bits, by programming the M bits (M0: bit 12 and M1: bit 28) in the USART_CR1 register (see *Figure 247*):

- 7-bit character length: M[1:0] = ‘10’
- 8-bit character length: M[1:0] = ‘00’
- 9-bit character length: M[1:0] = ‘01’

Note: In 7-bit data length mode, the smartcard mode, LIN master mode and auto baud rate (0x7F and 0x55 frames detection) are not supported.

By default, the signal (TX or RX) is in low state during the start bit. It is in high state during the stop bit.

These values can be inverted, separately for each signal, through polarity configuration control.

An ***Idle character*** is interpreted as an entire frame of “1”s (the number of “1”s includes the number of stop bits).

A ***Break character*** is interpreted on receiving “0”s for a frame period. At the end of the break frame, the transmitter inserts 2 stop bits.

Transmission and reception are driven by a common baud rate generator. The transmission and reception clock are generated when the enable bit is set for the transmitter and receiver, respectively.

A detailed description of each block is given below.

Figure 247. Word length programming

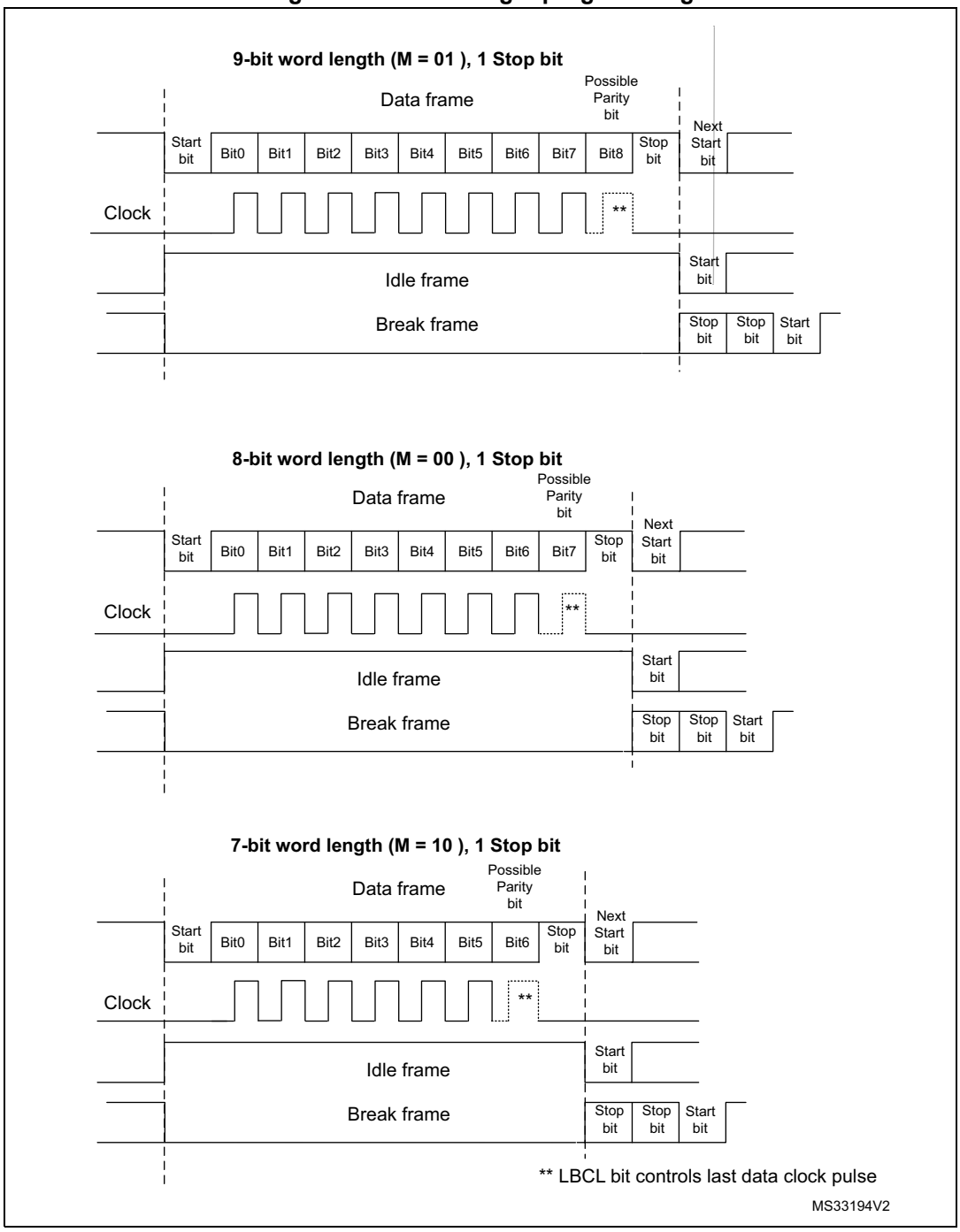

28.5.4 USART FIFOs and thresholds

The USART can operate in FIFO mode.

The USART comes with a Transmit FIFO (TXFIFO) and a Receive FIFO (RXFIFO). The FIFO mode is enabled by setting FIFOEN in USART_CR1 register (bit 29). This mode is supported only in UART, SPI and smartcard modes.

Since the maximum data word length is 9 bits, the TXFIFO is 9-bit wide. However the RXFIFO default width is 12 bits. This is due to the fact that the receiver does not only store the data in the FIFO, but also the error flags associated to each character (Parity error, Noise error and Framing error flags).

Note: The received data is stored in the RXFIFO together with the corresponding flags. However, only the data are read when reading the RDR.

The status flags are available in the USART_ISR register.

It is possible to configure the TXFIFO and RXFIFO levels at which the Tx and RX interrupts are triggered. These thresholds are programmed through RXFTCFG and TXFTCFG bitfields in USART_CR3 control register.

In this case:

- The RXFT flag is set in the USART_ISR register and the corresponding interrupt (if enabled) is generated, when the number of received data in the RXFIFO reaches the threshold programmed in the RXFTCFG bits fields.

  This means that the RXFIFO is filled until the number of data in the RXFIFO is equal to the programmed threshold.

  RXFTCFG data have been received: one data in USART_RDR and (RXFTCFG - 1) data in the RXFIFO. As an example, when the RXFTCFG is programmed to ‘101’, the RXFT flag is set when a number of data corresponding to the FIFO size has been received (FIFO size -1 data in the RXFIFO and 1 data in the USART_RDR). As a result, the next received data is not set the overrun flag.
- The TXFT flag is set in the USART_ISR register and the corresponding interrupt (if enabled) is generated when the number of empty locations in the TXFIFO reaches the threshold programmed in the TXFTCFG bits fields.

  This means that the TXFIFO is emptied until the number of empty locations in the TXFIFO is equal to the programmed threshold.

28.5.5 USART transmitter

The transmitter can send data words of either 7 or 8 or 9 bits, depending on the M bit status. The Transmit Enable bit (TE) must be set in order to activate the transmitter function. The data in the transmit shift register is output on the TX pin while the corresponding clock pulses are output on the CK pin.

Character transmission

During an USART transmission, data shifts out the least significant bit first (default configuration) on the TX pin. In this mode, the USART_TDR register consists of a buffer (TDR) between the internal bus and the transmit shift register.

When FIFO mode is enabled, the data written to the transmit data register (USART_TDR) are queued in the TXFIFO.

Every character is preceded by a start bit which corresponds to a low logic level for one bit period. The character is terminated by a configurable number of stop bits.

The number of stop bits can be configured to 0.5, 1, 1.5 or 2.

Note: The TE bit must be set before writing the data to be transmitted to the USART_TDR.

The TE bit should not be reset during data transmission. Resetting the TE bit during the transmission corrupts the data on the TX pin as the baud rate counters get frozen. The current data being transmitted are then lost.

An idle frame is sent when the TE bit is enabled.

Configurable stop bits

The number of stop bits to be transmitted with every character can be programmed in USART_CR2, bits 13,12.

- ***1 stop bit***: This is the default value of number of stop bits.
- ***2 stop bits***: This is supported by normal USART, single-wire and modem modes.
- ***1.5 stop bits***: To be used in smartcard mode.

An idle frame transmission includes the stop bits.

A break transmission features 10 low bits (when M[1:0] = ‘00’) or 11 low bits (when M[1:0] = ‘01’) or 9 low bits (when M[1:0] = ‘10’) followed by 2 stop bits (see *Figure 248*). It is not possible to transmit long breaks (break of length greater than 9/10/11 low bits).

Figure 248. Configurable stop bits

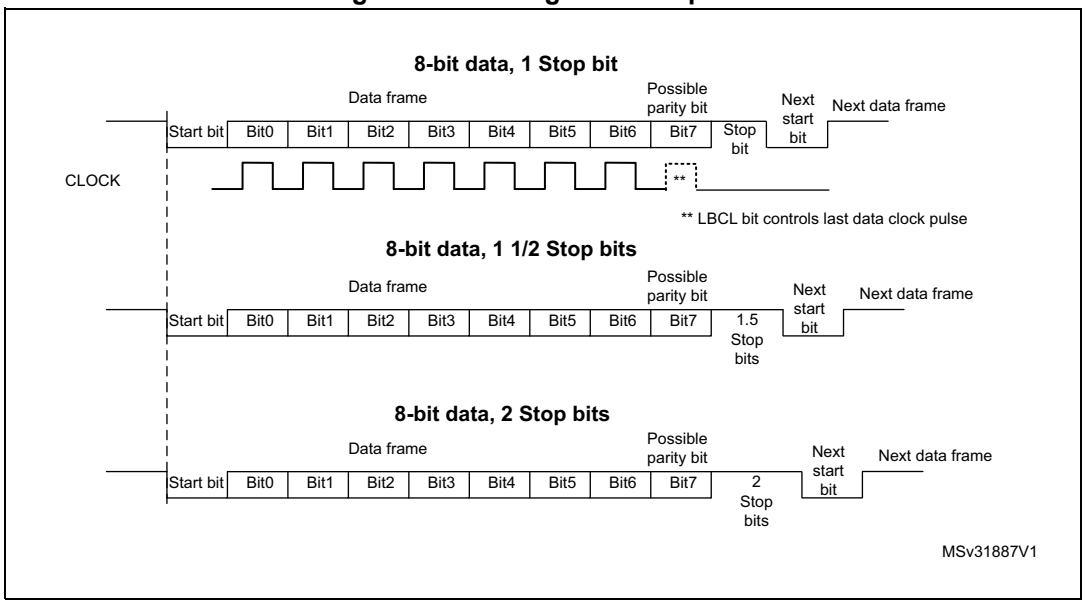

Character transmission procedure

To transmit a character, follow the sequence below:

1. Program the M bits in USART_CR1 to define the word length.
2. Select the desired baud rate using the USART_BRR register.
3. Program the number of stop bits in USART_CR2.
4. Enable the USART by writing the UE bit in USART_CR1 register to 1.
5. Select DMA enable (DMAT) in USART_CR3 if multibuffer communication must take place. Configure the DMA register as explained in *Section 28.5.19: Continuous communication using USART and DMA*.
6. Set the TE bit in USART_CR1 to send an idle frame as first transmission.
7. Write the data to send in the USART_TDR register. Repeat this for each data to be transmitted in case of single buffer.
   - When FIFO mode is disabled, writing a data to the USART_TDR clears the TXE flag.
   - When FIFO mode is enabled, writing a data to the USART_TDR adds one data to the TXFIFO. Write operations to the USART_TDR are performed when TXFNF flag is set. This flag remains set until the TXFIFO is full.
8. When the last data is written to the USART_TDR register, wait until TC = 1.
   - When FIFO mode is disabled, this indicates that the transmission of the last frame is complete.
   - When FIFO mode is enabled, this indicates that both TXFIFO and shift register are empty.

   This check is required to avoid corrupting the last transmission when the USART is disabled or enters Halt mode.

Single byte communication

- When FIFO mode is disabled

  Writing to the transmit data register always clears the TXE bit. The TXE flag is set by hardware. It indicates that:

  – the data have been moved from the USART_TDR register to the shift register and the data transmission has started;

  – the USART_TDR register is empty;

  – the next data can be written to the USART_TDR register without overwriting the previous data.

  This flag generates an interrupt if the TXEIE bit is set.

  When a transmission is ongoing, a write instruction to the USART_TDR register stores the data in the TDR buffer. It is then copied in the shift register at the end of the current transmission.

  When no transmission is ongoing, a write instruction to the USART_TDR register places the data in the shift register, the data transmission starts, and the TXE bit is set.

- When FIFO mode is enabled, the TXFNF (TXFIFO not full) flag is set by hardware to indicate that:

  – the TXFIFO is not full;

  – the USART_TDR register is empty;

  – the next data can be written to the USART_TDR register without overwriting the previous data. When a transmission is ongoing, a write operation to the USART_TDR register stores the data in the TXFIFO. Data are copied from the TXFIFO to the shift register at the end of the current transmission.

  When the TXFIFO is not full, the TXFNF flag stays at ‘1’ even after a write operation to USART_TDR register. It is cleared when the TXFIFO is full. This flag generates an interrupt if the TXFNFIE bit is set.

  Alternatively, interrupts can be generated and data can be written to the FIFO when the TXFIFO threshold is reached. In this case, the CPU can write a block of data defined by the programmed trigger level.

  If a frame is transmitted (after the stop bit) and the TXE flag (TXFE in case of FIFO mode) is set, the TC flag goes high. An interrupt is generated if the TCIE bit is set in the USART_CR1 register.

After writing the last data to the USART_TDR register, it is mandatory to wait until TC is set before disabling the USART or causing the device to enter the low-power mode (see *Figure 249: TC/TXE behavior when transmitting*).

Figure 249. TC/TXE behavior when transmitting

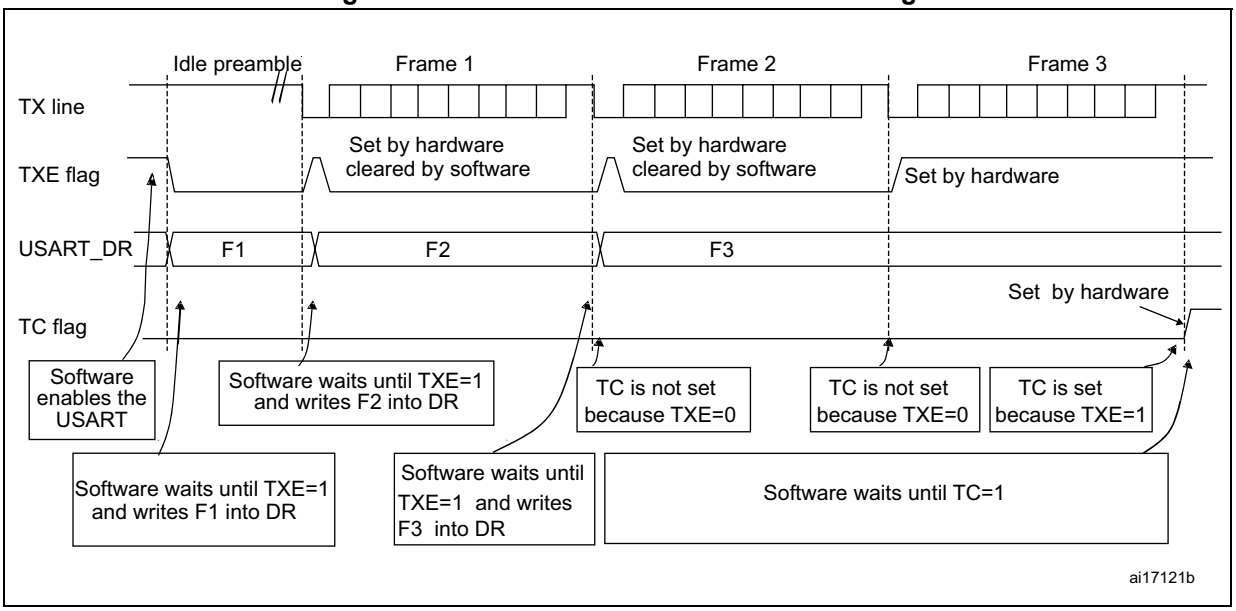

Note: When FIFO management is enabled, the TXFNF flag is used for data transmission.

Break characters

Setting the SBKRQ bit transmits a break character. The break frame length depends on the M bit (see *Figure 247*).

If a '1' is written to the SBKRQ bit, a break character is sent on the TX line after completing the current character transmission. The SBKF bit is set by the write operation and it is reset by hardware when the break character is completed (during the stop bits after the break character). The USART inserts a logic 1 signal (stop) for the duration of 2 bits at the end of the break frame to guarantee the recognition of the start bit of the next frame.

When the SBKRQ bit is set, the break character is sent at the end of the current transmission.

When FIFO mode is enabled, sending the break character has priority on sending data even if the TXFIFO is full.

Idle characters

Setting the TE bit drives the USART to send an idle frame before the first data frame.

28.5.6 USART receiver

The USART can receive data words of either 7 or 8 or 9 bits depending on the M bits in the USART_CR1 register.

Start bit detection

The start bit detection sequence is the same when oversampling by 16 or by 8.

In the USART, the start bit is detected when a specific sequence of samples is recognized. This sequence is: 1 1 1 0 X 0 X 0X 0X 0 X 0X 0.

Figure 250. Start bit detection when oversampling by 16 or 8

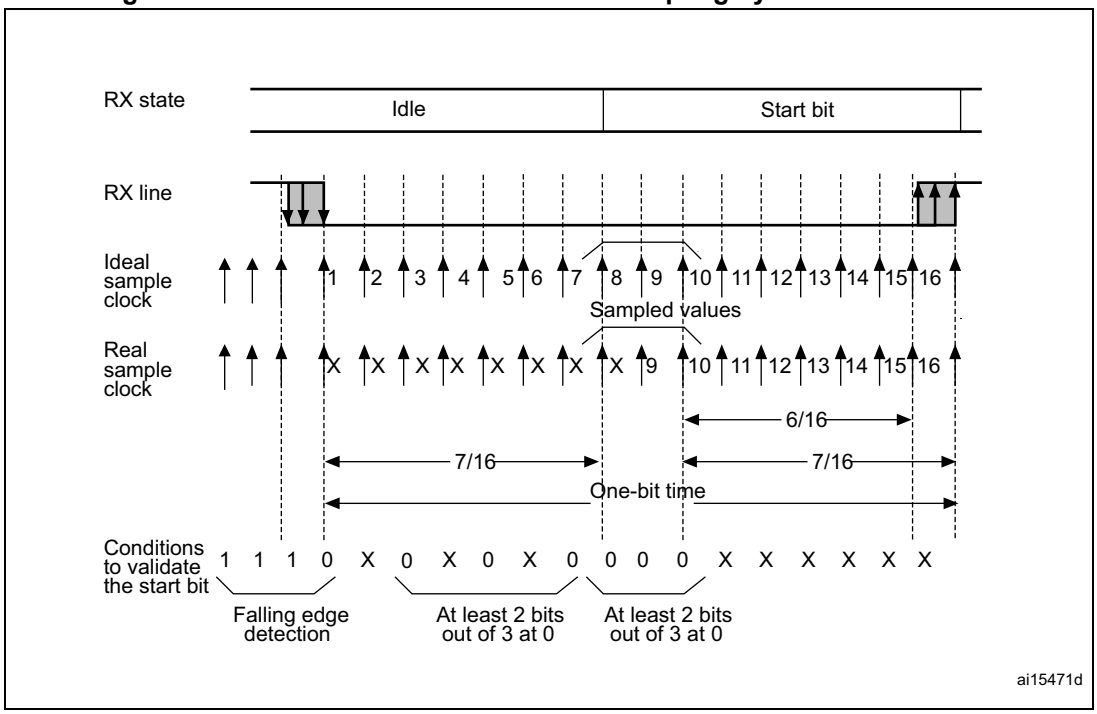

Note: If the sequence is not complete, the start bit detection aborts and the receiver returns to the idle state (no flag is set), where it waits for a falling edge.

The start bit is confirmed (RXNE flag set and interrupt generated if RXNEIE = 1, or RXFNE flag set and interrupt generated if RXFNEIE = 1 if FIFO mode enabled) if the 3 sampled bits are at ‘0’ (first sampling on the 3rd, 5th and 7th bits finds the 3 bits at ‘0’ and second sampling on the 8th, 9th and 10th bits also finds the 3 bits at ‘0’).

The start bit is validated but the NE noise flag is set if,

a) for both samplings, 2 out of the 3 sampled bits are at ‘0’ (sampling on the 3rd, 5th and 7th bits and sampling on the 8th, 9th and 10th bits)

or

b) for one of the samplings (sampling on the 3rd, 5th and 7th bits or sampling on the 8th, 9th and 10th bits), 2 out of the 3 bits are found at ‘0’.

If neither of the above conditions are met, the start detection aborts and the receiver returns to the idle state (no flag is set).

Character reception

During an USART reception, data are shifted out least significant bit first (default configuration) through the RX pin.

Character reception procedure

To receive a character, follow the sequence below:

1. Program the M bits in USART_CR1 to define the word length.
2. Select the desired baud rate using the baud rate register USART_BRR
3. Program the number of stop bits in USART_CR2.
4. Enable the USART by writing the UE bit in USART_CR1 register to ‘1’.
5. Select DMA enable (DMAR) in USART_CR3 if multibuffer communication is to take place. Configure the DMA register as explained in *Section 28.5.19: Continuous communication using USART and DMA*.
6. Set the RE bit USART_CR1. This enables the receiver which begins searching for a start bit.

When a character is received:

- When FIFO mode is disabled, the RXNE bit is set to indicate that the content of the shift register is transferred to the RDR. In other words, data have been received and can be read (as well as their associated error flags).
- When FIFO mode is enabled, the RXFNE bit is set to indicate that the RXFIFO is not empty. Reading the USART_RDR returns the oldest data entered in the RXFIFO. When a data is received, it is stored in the RXFIFO together with the corresponding error bits.
- An interrupt is generated if the RXNEIE (RXFNEIE when FIFO mode is enabled) bit is set.
- The error flags can be set if a frame error, noise, parity or an overrun error was detected during reception.
- In multibuffer communication mode:
  - When FIFO mode is disabled, the RXNE flag is set after every byte reception. It is cleared when the DMA reads the Receive data Register.
  - When FIFO mode is enabled, the RXFNE flag is set when the RXFIFO is not empty. After every DMA request, a data is retrieved from the RXFIFO. A DMA request is triggered when the RXFIFO is not empty i.e. when there are data to be read from the RXFIFO.
- In single buffer mode:
  - When FIFO mode is disabled, clearing the RXNE flag is done by performing a software read from the USART_RDR register. The RXNE flag can also be cleared by programming RXFRQ bit to ‘1’ in the USART_RQR register. The RXNE flag must be cleared before the end of the reception of the next character to avoid an overrun error.
  - When FIFO mode is enabled, the RXFNE is set when the RXFIFO is not empty. After every read operation from USART_RDR, a data is retrieved from the RXFIFO. When the RXFIFO is empty, the RXFNE flag is cleared. The RXFNE flag can also be cleared by programming RXFRQ bit to ‘1’ in USART_RQR. When the RXFIFO is full, the first entry in the RXFIFO must be read before the end of the reception of the next character, to avoid an overrun error. The RXFNE flag generates an interrupt if the RXFNEIE bit is set. Alternatively, interrupts can be

generated and data can be read from RXFIFO when the RXFIFO threshold is reached. In this case, the CPU can read a block of data defined by the programmed threshold.

Break character

When a break character is received, the USART handles it as a framing error.

Idle character

When an idle frame is detected, it is handled in the same way as a data character reception except that an interrupt is generated if the IDLEIE bit is set.

Overrun error

- FIFO mode disabled

  An overrun error occurs if a character is received and RXNE has not been reset.

  Data can not be transferred from the shift register to the RDR register until the RXNE bit is cleared. The RXN E flag is set after every byte reception.

  An overrun error occurs if RXNE flag is set when the next data is received or the previous DMA request has not been serviced. When an overrun error occurs:
  - the ORE bit is set;
  - the RDR content is not lost. The previous data is available by reading the USART_RDR register.
  - the shift register is overwritten. After that, any data received during overrun is lost.
  - an interrupt is generated if either the RXNEIE or the EIE bit is set.
- FIFO mode enabled

  An overrun error occurs when the shift register is ready to be transferred and the receive FIFO is full.

  Data can not be transferred from the shift register to the USART_RDR register until there is one free location in the RXFIFO. The RXFNE flag is set when the RXFIFO is not empty.

  An overrun error occurs if the RXFIFO is full and the shift register is ready to be transferred. When an overrun error occurs:
  - The ORE bit is set.
  - The first entry in the RXFIFO is not lost. It is available by reading the USART_RDR register.
  - The shift register is overwritten. After that point, any data received during overrun is lost.
  - An interrupt is generated if either the RXFNEIE or EIE bit is set.

The ORE bit is reset by setting the ORECF bit in the USART_ICR register.

Note: The ORE bit, when set, indicates that at least 1 data has been lost.

When the FIFO mode is disabled, there are two possibilities

- *if RXNE = 1, then the last valid data is stored in the receive register (RDR) and can be read,*
- *if RXNE = 0, the last valid data has already been read and there is nothing left to be read in the RDR register. This case can occur when the last valid data is read in the RDR register at the same time as the new (and lost) data is received.*

Selecting the clock source and the appropriate oversampling method

The choice of the clock source is done through the Clock Control system (see Section *Reset and clock control (RCC)*). The clock source must be selected through the UE bit before enabling the USART.

The clock source must be selected according to two criteria:

- Possible use of the USART in low-power mode
- Communication speed.

The clock source frequency is usart_ker_ck.

When the dual clock domain and the wake-up from low-power mode features are supported, the usart_ker_ck clock source can be configurable in the RCC (see Section *Reset and clock control (RCC)*). Otherwise the usart_ker_ck clock is the same as usart_pclk.

The usart_ker_ck clock can be divided by a programmable factor, defined in the USART_PRESC register.

Figure 251. usart_ker_ck clock divider block diagram

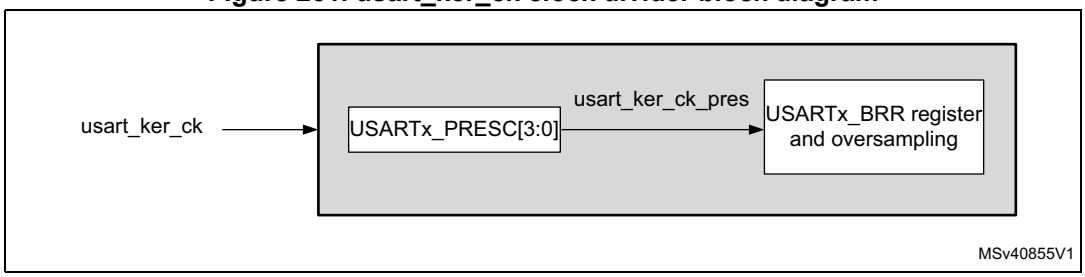

Some usart_ker_ck sources enable the USART to receive data while the MCU is in low-power mode. Depending on the received data and wake-up mode selected, the USART wakes up the MCU, when needed, in order to transfer the received data, by performing a software read to the USART_RDR register or by DMA.

For the other clock sources, the system must be active to enable USART communications.

The communication speed range (specially the maximum communication speed) is also determined by the clock source.

The receiver implements different user-configurable oversampling techniques (except in synchronous mode) for data recovery by discriminating between valid incoming data and noise. This enables obtaining the best a trade-off between the maximum communication speed and noise/clock inaccuracy immunity.

The oversampling method can be selected by programming the OVER8 bit in the USART_CR1 register either to 16 or 8 times the baud rate clock (see *Figure 252* and *Figure 253*).

Depending on your application:

- select oversampling by 8 (OVER8 = 1) to achieve higher speed (up to usart_ker_ck_pres/8). In this case the maximum receiver tolerance to clock deviation is reduced (refer to *Section 28.5.8: Tolerance of the USART receiver to clock deviation on page 855*)
- select oversampling by 16 (OVER8 = 0) to increase the tolerance of the receiver to clock deviations. In this case, the maximum speed is limited to maximum

usart_ker_ck_pres/16 (where usart_ker_ck_pres is the USART input clock divided by a prescaler).

Programming the ONEBIT bit in the USART_CR3 register selects the method used to evaluate the logic level. Two options are available:

- The majority vote of the three samples in the center of the received bit. In this case, when the 3 samples used for the majority vote are not equal, the NE bit is set.
- A single sample in the center of the received bit

  Depending on your application:
  - select the three sample majority vote method (ONEBIT = 0) when operating in a noisy environment and reject the data when a noise is detected (refer to *Figure 177*) because this indicates that a glitch occurred during the sampling.
  - select the single sample method (ONEBIT = 1) when the line is noise-free to increase the receiver tolerance to clock deviations (see *Section 28.5.8: Tolerance of the USART receiver to clock deviation on page 855*). In this case the NE bit is never set.

When noise is detected in a frame:

- The NE bit is set at the rising edge of the RXNE bit (RXFNE in case of FIFO mode enabled).
- The invalid data is transferred from the Shift register to the USART_RDR register.
- No interrupt is generated in case of single byte communication. However this bit rises at the same time as the RXNE bit (RXFNE in case of FIFO mode enabled) which itself generates an interrupt. In case of multibuffer communication an interrupt is issued if the EIE bit is set in the USART_CR3 register.

The NE bit is reset by setting NECF bit in USART_ICR register.

Note: Noise error is not supported in SPI and IrDA modes.

Oversampling by 8 is not available in the smartcard, IrDA and LIN modes. In those modes, the OVER8 bit is forced to '0 ' by hardware.

Figure 252. Data sampling when oversampling by 16

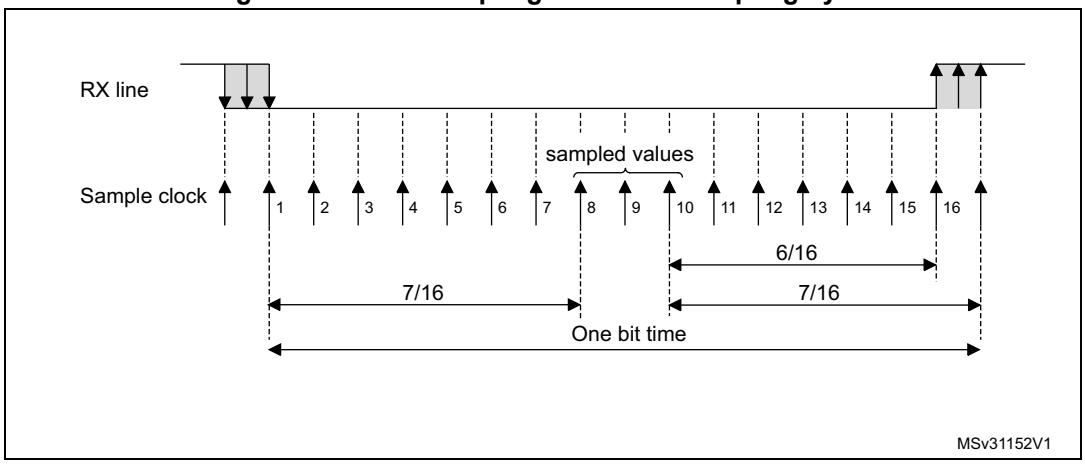

Figure 253. Data sampling when oversampling by 8

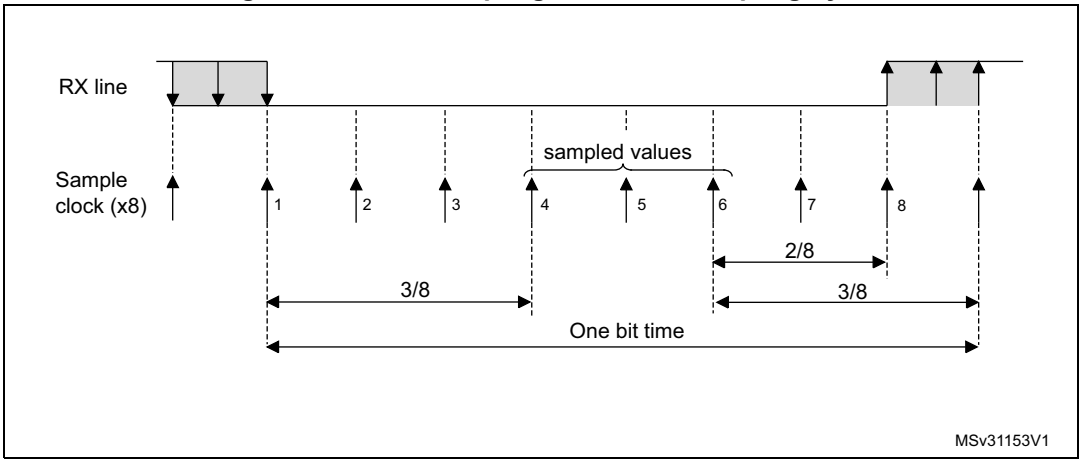

Table 177. Noise detection from sampled data

Sampled value	NE status	Received bit value
000	0	0
001	1	0
010	1	0
011	1	1
100	1	0
101	1	1
110	1	1
111	0	1

Framing error

A framing error is detected when the stop bit is not recognized on reception at the expected time, following either a de-synchronization or excessive noise.

When the framing error is detected:

- the FE bit is set by hardware;
- the invalid data is transferred from the Shift register to the USART_RDR register (RXFIFO in case FIFO mode is enabled).
- no interrupt is generated in case of single byte communication. However this bit rises at the same time as the RXNE bit (RXFNE in case FIFO mode is enabled) which itself generates an interrupt. In case of multibuffer communication an interrupt is issued if the EIE bit is set in the USART_CR3 register.

The FE bit is reset by writing ‘1’ to the FECF in the USART_ICR register.

Note: Framing error is not supported in SPI mode.

Configurable stop bits during reception

The number of stop bits to be received can be configured through the control bits of USART_CR: it can be either 1 or 2 in normal mode and 0.5 or 1.5 in smartcard mode.

- **0.5 stop bit (reception in smartcard mode)**: no sampling is done for 0.5 stop bit. As a consequence, no framing error and no break frame can be detected when 0.5 stop bit is selected.
- **1 stop bit**: sampling for 1 stop bit is done on the 8th, 9th and 10th samples.
- 1.5 stop bits (smartcard mode)

  When transmitting in smartcard mode, the device must check that the data are correctly sent. The receiver block must consequently be enabled (RE = 1 in USART_CR1) and the stop bit is checked to test if the smartcard has detected a parity error.

  In the event of a parity error, the smartcard forces the data signal low during the sampling (NACK signal), which is flagged as a framing error. The FE flag is then set through RXNE flag (RXFNE if the FIFO mode is enabled) at the end of the 1.5 stop bit. Sampling for 1.5 stop bits is done on the 16th, 17th and 18th samples (1 baud clock period after the beginning of the stop bit). The 1.5 stop bit can be broken into 2 parts: one 0.5 baud clock period during which nothing happens, followed by 1 normal stop bit period during which sampling occurs halfway through (refer to *Section 28.5.16: USART receiver timeout on page 869* for more details).
- 2 stop bits

  Sampling for 2 stop bits is done on the 8th, 9th and 10th samples of the first stop bit.

  The framing error flag is set if a framing error is detected during the first stop bit.

  The second stop bit is not checked for framing error. The RXNE flag (RXFNE if the FIFO mode is enabled) is set at the end of the first stop bit.

28.5.7 USART baud rate generation

The baud rate for the receiver and transmitter (Rx and Tx) are both set to the value programmed in the USART_BRR register.

Equation 1: baud rate for standard USART (SPI mode included) (OVER8 = ‘0’ or ‘1’)

In case of oversampling by 16, the baud rate is given by the following formula:

$$\text{Tx/Rx baud} = \frac{\text{usart_ker_ck_pres}}{\text{USARTDIV}}$$

In case of oversampling by 8, the baud rate is given by the following formula:

$$\text{Tx/Rx baud} = \frac{2 \times \text{usart_ker_ck_pres}}{\text{USARTDIV}}$$

Equation 2: baud rate in smartcard, LIN and IrDA modes (OVER8 = 0)

The baud rate is given by the following formula:

$$\text{Tx/Rx baud} = \frac{\text{usart_ker_ck_pres}}{\text{USARTDIV}}$$

USARTDIV is an unsigned fixed point number that is coded on the USART_BRR register.

- When OVER8 = 0, BRR = USARTDIV.
- When OVER8 = 1
  - BRR[2:0] = USARTDIV[3:0] shifted 1 bit to the right.
  - BRR[3] must be kept cleared.
  - BRR[15:4] = USARTDIV[15:4]

Note: The baud counters are updated to the new value in the baud registers after a write operation to USART_BRR. Hence the baud rate register value should not be changed during communication.

In case of oversampling by 16 and 8, USARTDIV must be greater than or equal to 16.

How to derive USARTDIV from USART_BRR register values

Example 1

To obtain 9600 baud with usart_ker_ck_pres = 8 MHz:

- In case of oversampling by 16:
  USARTDIV = 8 000 000/9600
  BRR = USARTDIV = 0d833 = 0x0341
- In case of oversampling by 8:
  USARTDIV = 2 * 8 000 000/9600
  USARTDIV = 1666,66 (0d1667 = 0x683)
  BRR[3:0] = 0x3 >> 1 = 0x1
  BRR = 0x681

Example 2

To obtain 921.6 Kbaud with usart_ker_ck_pres = 48 MHz:

- In case of oversampling by 16:
  USARTDIV = 48 000 000/921 600
  BRR = USARTDIV = 0d52 = 0x34
- In case of oversampling by 8:
  USARTDIV = 2 * 48 000 000/921 600
  USARTDIV = 104 (0d104 = 0x68)
  BRR[3:0] = USARTDIV[3:0] >> 1 = 0x8 >> 1 = 0x4
  BRR = 0x64

28.5.8 Tolerance of the USART receiver to clock deviation

The USART asynchronous receiver operates correctly only if the total clock system deviation is less than the tolerance of the USART receiver.

The causes which contribute to the total deviation are:

- DTRA: deviation due to the transmitter error (which also includes the deviation of the transmitter's local oscillator)
- DQUANT: error due to the baud rate quantization of the receiver
- DREC: deviation of the receiver local oscillator
- DTCL: deviation due to the transmission line (generally due to the transceivers which can introduce an asymmetry between the low-to-high transition timing and the high-to-low transition timing)

$$DTRA + DQUANT + DREC + DTCL + DWU < USART\ receiver\ tolerance$$

where

DWU is the error due to sampling point deviation when the wake-up from low-power mode is used.

when M[1:0] = 01:

$$DWU = \frac{t_{WUUSART}}{11 \times Tbit}$$

when M[1:0] = 00:

$$DWU = \frac{t_{WUUSART}}{10 \times Tbit}$$

when M[1:0] = 10:

$$DWU = \frac{t_{WUUSART}}{9 \times Tbit}$$

$t_{WUUSART}$ is the time between the detection of the start bit falling edge and the instant when the clock (requested by the peripheral) is ready and reaching the peripheral, and the regulator is ready.

The USART receiver can receive data correctly at up to the maximum tolerated deviation specified in *Table 178*, *Table 179*, depending on the following settings:

- 9-, 10- or 11-bit character length defined by the M bits in the USART_CR1 register
- Oversampling by 8 or 16 defined by the OVER8 bit in the USART_CR1 register
- Bits BRR[3:0] of USART_BRR register are equal to or different from 0000.
- Use of 1 bit or 3 bits to sample the data, depending on the value of the ONEBIT bit in the USART_CR3 register.

Table 178. Tolerance of the USART receiver when BRR [3:0] = 0000

M bits	OVER8 bit = 0		OVER8 bit = 1	
	ONEBIT = 0	ONEBIT = 1	ONEBIT = 0	ONEBIT = 1
00	3.75%	4.375%	2.50%	3.75%
01	3.41%	3.97%	2.27%	3.41%
10	4.16%	4.86%	2.77%	4.16%

Table 179. Tolerance of the USART receiver when BRR[3:0] is different from 0000

M bits	OVER8 bit = 0		OVER8 bit = 1	
	ONEBIT = 0	ONEBIT = 1	ONEBIT = 0	ONEBIT = 1
00	3.33%	3.88%	2%	3%
01	3.03%	3.53%	1.82%	2.73%
10	3.7%	4.31%	2.22%	3.33%

Note: The data specified in Table 178 and Table 179 may slightly differ in the special case when the received frames contain some Idle frames of exactly 10-bit times when M bits = 00 (11-bit times when M = 01 or 9- bit times when M = 10).

28.5.9 USART auto baud rate detection

The USART can detect and automatically set the USART_BRR register value based on the reception of one character. Automatic baud rate detection is useful under two circumstances:

- The communication speed of the system is not known in advance.
- The system is using a relatively low accuracy clock source and this mechanism enables the correct baud rate to be obtained without measuring the clock deviation.

The clock source frequency must be compatible with the expected communication speed.

- When oversampling by 16, the baud rate ranges from usart_ker_ck_pres/65535 and usart_ker_ck_pres/16.
- When oversampling by 8, the baud rate ranges from usart_ker_ck_pres/65535 and usart_ker_ck_pres/8.

Before activating the auto baud rate detection, the auto baud rate detection mode must be selected through the ABRMOD[1:0] field in the USART_CR2 register. There are four modes based on different character patterns. In these auto baud rate modes, the baud rate is measured several times during the synchronization data reception and each measurement is compared to the previous one.

These modes are the following:

- **Mode 0**: Any character starting with a bit at ‘1’.

  In this case the USART measures the duration of the start bit (falling edge to rising edge).
- **Mode 1:** Any character starting with a 10xx bit pattern.

  In this case, the USART measures the duration of the Start and of the 1st data bit. The measurement is done falling edge to falling edge, to ensure a better accuracy in the case of slow signal slopes.
- **Mode 2**: A 0x7F character frame (it may be a 0x7F character in LSB first mode or a 0xFE in MSB first mode).

  In this case, the baud rate is updated first at the end of the start bit (BRs), then at the end of bit 6 (based on the measurement done from falling edge to falling edge: BR6). Bit0 to bit6 are sampled at BRs while further bits of the character are sampled at BR6.
- **Mode 3**: A 0x55 character frame.

  In this case, the baud rate is updated first at the end of the start bit (BRs), then at the end of bit0 (based on the measurement done from falling edge to falling edge: BR0), and finally at the end of bit6 (BR6). Bit 0 is sampled at BRs, bit 1 to bit 6 are sampled at BR0, and further bits of the character are sampled at BR6. In parallel, another check is performed for each intermediate RX line transition. An error is generated if the transitions on RX are not sufficiently synchronized with the receiver (the receiver being based on the baud rate calculated on bit 0).

Prior to activating the auto baud rate detection, the USART_BRR register must be initialized by writing a non-zero baud rate value.

The automatic baud rate detection is activated by setting the ABREN bit in the USART_CR2 register. The USART then waits for the first character on the RX line. The auto baud rate operation completion is indicated by the setting of the ABRF flag in the USART_ISR register. If the line is noisy, the correct baud rate detection cannot be guaranteed. In this case the BRR value may be corrupted and the ABRE error flag is set. This also happens if the communication speed is not compatible with the automatic baud rate detection range (bit duration not between 16 and 65536 clock periods (oversampling by 16) and not between 8 and 65536 clock periods (oversampling by 8)).

The auto baud rate detection can be re-launched later by resetting the ABRF flag (by writing a ‘0’).

When FIFO management is disabled and an auto baud rate error occurs, the ABRE flag is set through RXNE and FE bits.

When FIFO management is enabled and an auto baud rate error occurs, the ABRE flag is set through RXFNE and FE bits.

If the FIFO mode is enabled, the auto baud rate detection should be made using the data on the first RXFIFO location. So, prior to launching the auto baud rate detection, make sure that the RXFIFO is empty by checking the RXFNE flag in USART_ISR register.

Note: The BRR value might be corrupted if the USART is disabled (UE = 0) during an auto baud rate operation.

28.5.10 USART multiprocessor communication

It is possible to perform USART multiprocessor communications (with several USARTs connected in a network). For instance one of the USARTs can be the master with its TX output connected to the RX inputs of the other USARTs, while the others are slaves with their respective TX outputs logically ANDed together and connected to the RX input of the master.

In multiprocessor configurations, it is often desirable that only the intended message recipient actively receives the full message contents, thus reducing redundant USART service overhead for all non addressed receivers.

The non-addressed devices can be placed in mute mode by means of the muting function. To use the mute mode feature, the MME bit must be set in the USART_CR1 register.

Note: When FIFO management is enabled and MME is already set, MME bit must not be cleared and then set again quickly (within two usart_ker_ck cycles), otherwise mute mode might remain active.

When the mute mode is enabled:

- none of the reception status bits can be set;
- all the receive interrupts are inhibited;
- the RWU bit in USART_ISR register is set to ‘1’. RWU can be controlled automatically by hardware or by software, through the MMRQ bit in the USART_RQR register, under certain conditions.

The USART can enter or exit from mute mode using one of two methods, depending on the WAKE bit in the USART_CR1 register:

- Idle Line detection if the WAKE bit is reset,
- Address Mark detection if the WAKE bit is set.

Idle line detection (WAKE = 0)

The USART enters mute mode when the MMRQ bit is written to ‘1’ and the RWU is automatically set.

The USART wakes up when an Idle frame is detected. The RWU bit is then cleared by hardware but the IDLE bit is not set in the USART_ISR register. An example of mute mode behavior using Idle line detection is given in *Figure 254*.

Figure 254. Mute mode using Idle line detection

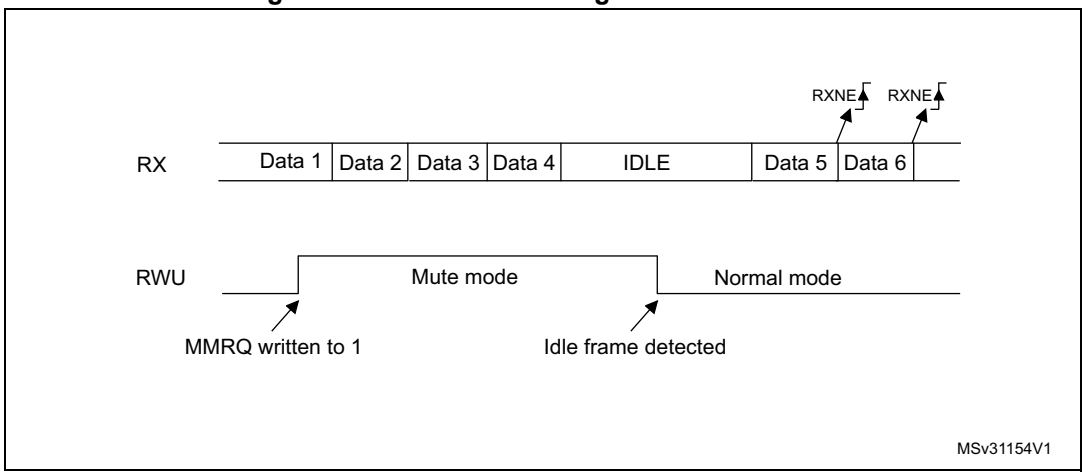

Note: If the MMRQ is set while the IDLE character has already elapsed, mute mode is not entered (RWU is not set).

If the USART is activated while the line is IDLE, the idle state is detected after the duration of one IDLE frame (not only after the reception of one character frame).

4-bit/7-bit address mark detection (WAKE = 1)

In this mode, bytes are recognized as addresses if their MSB is a ‘1’, otherwise they are considered as data. In an address byte, the address of the targeted receiver is put in the 4 or 7 LSBs. The choice of 7 or 4 bit address detection is done using the ADDM7 bit. This 4-bit/7-bit word is compared by the receiver with its own address which is programmed in the ADD bits in the USART_CR2 register.

Note: In 7-bit and 9-bit data modes, address detection is done on 6-bit and 8-bit addresses (ADD[5:0] and ADD[7:0]) respectively.

The USART enters mute mode when an address character is received which does not match its programmed address. In this case, the RWU bit is set by hardware. The RXNE flag is not set for this address byte and no interrupt or DMA request is issued when the USART enters mute mode. When FIFO management is enabled, the software should ensure that there is at least one empty location in the RXFIFO before entering mute mode.

The USART also enters mute mode when the MMRQ bit is written to 1. The RWU bit is also automatically set in this case.

The USART exits from mute mode when an address character is received which matches the programmed address. Then the RWU bit is cleared and subsequent bytes are received normally. The RXNE/RXFNE bit is set for the address character since the RWU bit has been cleared.

Note: When FIFO management is enabled, when MMRQ is set while the receiver is sampling last bit of a data, this data may be received before effectively entering in mute mode

An example of mute mode behavior using address mark detection is given in *Figure 255*.

Figure 255. Mute mode using address mark detection

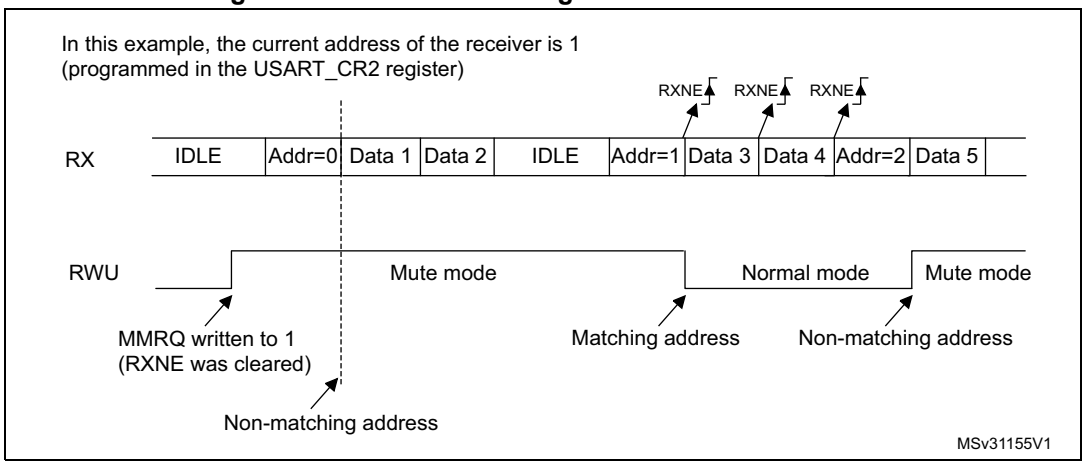

28.5.11 USART Modbus communication

The USART offers basic support for the implementation of Modbus/RTU and Modbus/ASCII protocols. Modbus/RTU is a half-duplex, block-transfer protocol. The control part of the protocol (address recognition, block integrity control and command interpretation) must be implemented in software.

The USART offers basic support for the end of the block detection, without software overhead or other resources.

Modbus/RTU

In this mode, the end of one block is recognized by a “silence” (idle line) for more than 2 character times. This function is implemented through the programmable timeout function.

The timeout function and interrupt must be activated, through the RTOEN bit in the USART_CR2 register and the RTOIE in the USART_CR1 register. The value corresponding to a timeout of 2 character times (for example 22 x bit time) must be programmed in the RTO register. When the receive line is idle for this duration, after the last stop bit is received, an interrupt is generated, informing the software that the current block reception is completed.

Modbus/ASCII

In this mode, the end of a block is recognized by a specific (CR/LF) character sequence. The USART manages this mechanism using the character match function.

By programming the LF ASCII code in the ADD[7:0] field and by activating the character match interrupt (CMIE = 1), the software is informed when a LF has been received and can check the CR/LF in the DMA buffer.

28.5.12 USART parity control

Parity control (generation of parity bit in transmission and parity checking in reception) can be enabled by setting the PCE bit in the USART_CR1 register. Depending on the frame length defined by the M bits, the possible USART frame formats are as listed in *Table 180*.

Table 180. USART frame formats

M bits	PCE bit	USART frame[1]
00	0	| SB | 8 bit data | STB |
00	1	| SB | 7-bit data | PB | STB |
01	0	| SB | 9-bit data | STB |
01	1	| SB | 8-bit data PB | STB |
10	0	| SB | 7bit data | STB |
10	1	| SB | 6-bit data | PB | STB |

1. Legends: SB: start bit, STB: stop bit, PB: parity bit. In the data register, the PB is always taking the MSB position (8th or 7th, depending on the M bit value).

Even parity

The parity bit is calculated to obtain an even number of “1s” inside the frame of the 6, 7 or 8 LSB bits (depending on M bit values) and the parity bit.

As an example, if data = 00110101 and 4 bits are set, the parity bit is equal to 0 if even parity is selected (PS bit in USART_CR1 = 0).

Odd parity

The parity bit is calculated to obtain an odd number of “1s” inside the frame made of the 6, 7 or 8 LSB bits (depending on M bit values) and the parity bit.

As an example, if data = 00110101 and 4 bits set, then the parity bit is equal to 1 if odd parity is selected (PS bit in USART_CR1 = 1).

Parity checking in reception

If the parity check fails, the PE flag is set in the USART_ISR register and an interrupt is generated if PEIE is set in the USART_CR1 register. The PE flag is cleared by software writing 1 to the PECF in the USART_ICR register.

Parity generation in transmission

If the PCE bit is set in USART_CR1, then the MSB bit of the data written in the data register is transmitted but is changed by the parity bit (even number of “1s” if even parity is selected (PS = 0) or an odd number of “1s” if odd parity is selected (PS=1).

28.5.13 USART LIN (local interconnection network) mode

This section is relevant only when LIN mode is supported. Refer to *Section 28.4: USART implementation on page 838*.

The LIN mode is selected by setting the LINEN bit in the USART_CR2 register. In LIN mode, the following bits must be kept cleared:

- STOP[1:0] and CLKEN in the USART_CR2 register,
- SCEN, HDSEL and IREN in the USART_CR3 register.

LIN transmission

The procedure described in *Section 28.5.4* has to be applied for LIN master transmission. It must be the same as for normal USART transmission with the following differences:

- Clear the M bit to configure 8-bit word length.
- Set the LINEN bit to enter LIN mode. In this case, setting the SBKRQ bit sends 13 ‘0 bits as a break character. Then two bits of value ‘1 are sent to enable the next start detection.

LIN reception

When LIN mode is enabled, the break detection circuit is activated. The detection is totally independent from the normal USART receiver. A break can be detected whenever it occurs, during Idle state or during a frame.

When the receiver is enabled (RE = 1 in USART_CR1), the circuit looks at the RX input for a start signal. The method for detecting start bits is the same when searching break characters or data. After a start bit has been detected, the circuit samples the next bits exactly like for the data (on the 8th, 9th and 10th samples). If 10 (when the LBDL = 0 in USART_CR2) or 11 (when LBDL = 1 in USART_CR2) consecutive bits are detected as ‘0, and are followed by a delimiter character, the LBDF flag is set in USART_ISR. If the LBDIE bit = 1, an interrupt is generated. Before validating the break, the delimiter is checked for as it signifies that the RX line has returned to a high level.

If a ‘1 is sampled before the 10 or 11 have occurred, the break detection circuit cancels the current detection and searches for a start bit again.

If the LIN mode is disabled (LINEN = 0), the receiver continues working as normal USART, without taking into account the break detection.

If the LIN mode is enabled (LINEN = 1), as soon as a framing error occurs (i.e. stop bit detected at ‘0, which is the case for any break frame), the receiver stops until the break detection circuit receives either a ‘1, if the break word was not complete, or a delimiter character if a break has been detected.

The behavior of the break detector state machine and the break flag is shown on the *Figure 256*.

Examples of break frames are given on *Figure 257*.

Figure 256. Break detection in LIN mode (11-bit break length - LBDL bit is set)

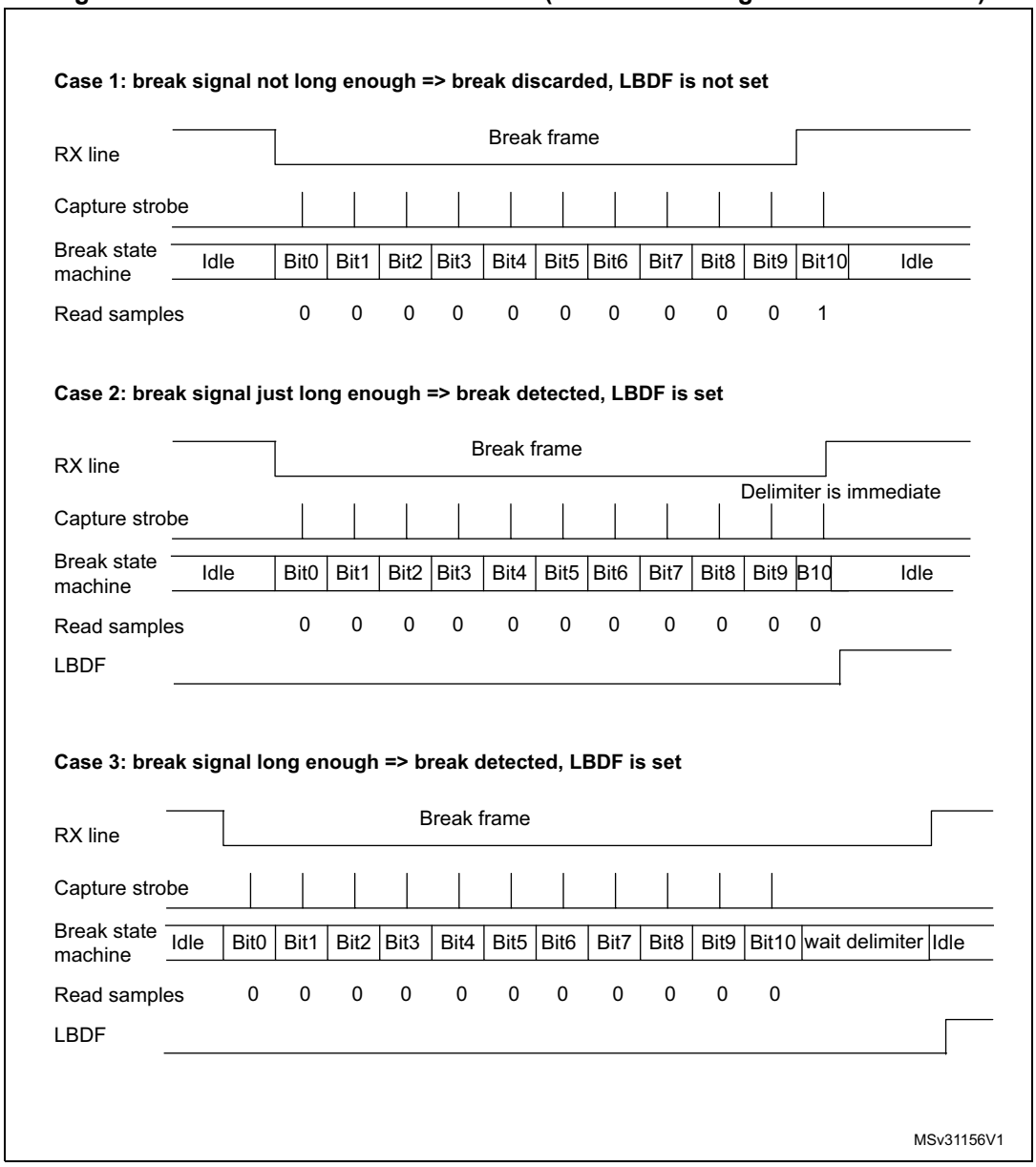

Figure 257. Break detection in LIN mode vs. Framing error detection

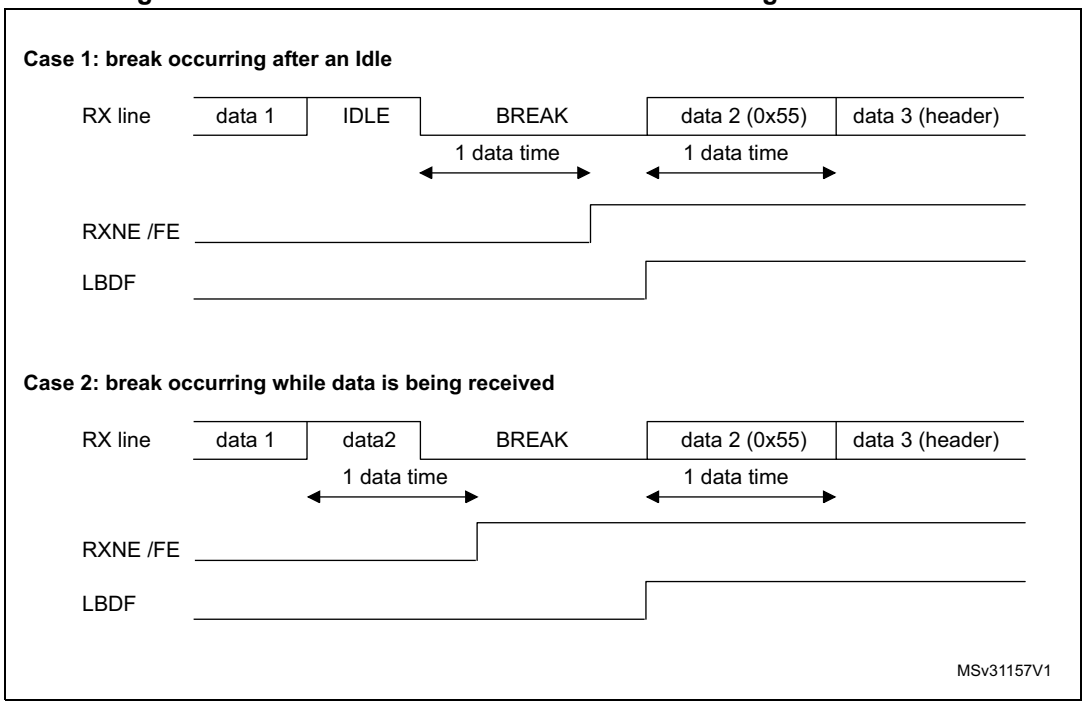

28.5.14 USART synchronous mode

Master mode

The synchronous master mode is selected by programming the CLKEN bit in the USART_CR2 register to ‘1’. In synchronous mode, the following bits must be kept cleared:

- LINEN bit in the USART_CR2 register,
- SCEN, HDSEL and IREN bits in the USART_CR3 register.

In this mode, the USART can be used to control bidirectional synchronous serial communications in master mode. The CK pin is the output of the USART transmitter clock. No clock pulses are sent to the CK pin during start bit and stop bit. Depending on the state of the LBCL bit in the USART_CR2 register, clock pulses are, or are not, generated during the last valid data bit (address mark). The CPOL bit in the USART_CR2 register is used to select the clock polarity, and the CPHA bit in the USART_CR2 register is used to select the phase of the external clock (see *Figure 258*, *Figure 259* and *Figure 260*).

During the Idle state, preamble and send break, the external CK clock is not activated.

In synchronous master mode, the USART transmitter operates exactly like in asynchronous mode. However, since CK is synchronized with TX (according to CPOL and CPHA), the data on TX is synchronous.

In synchronous master mode, the USART receiver operates in a different way compared to asynchronous mode. If RE is set to 1, the data are sampled on CK (rising or falling edge, depending on CPOL and CPHA), without any oversampling. A given setup and a hold time must be respected (which depends on the baud rate: 1/16 bit time).

Note: In master mode, the CK pin operates in conjunction with the TX pin. Thus, the clock is provided only if the transmitter is enabled (TE = 1) and data are being transmitted (USART_TDR data register written). This means that it is not possible to receive synchronous data without transmitting data.

Figure 258. USART example of synchronous master transmission

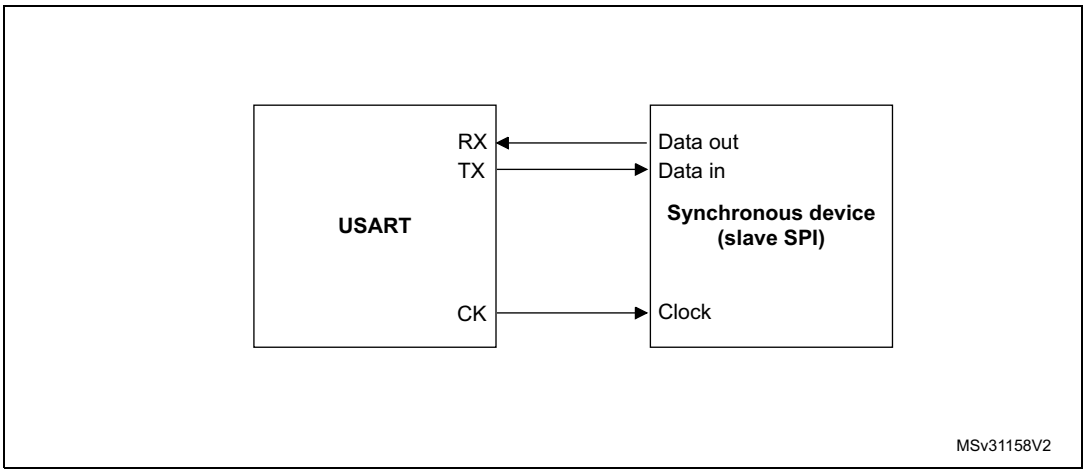

Figure 259. USART data clock timing diagram in synchronous master mode (M bits = 00)

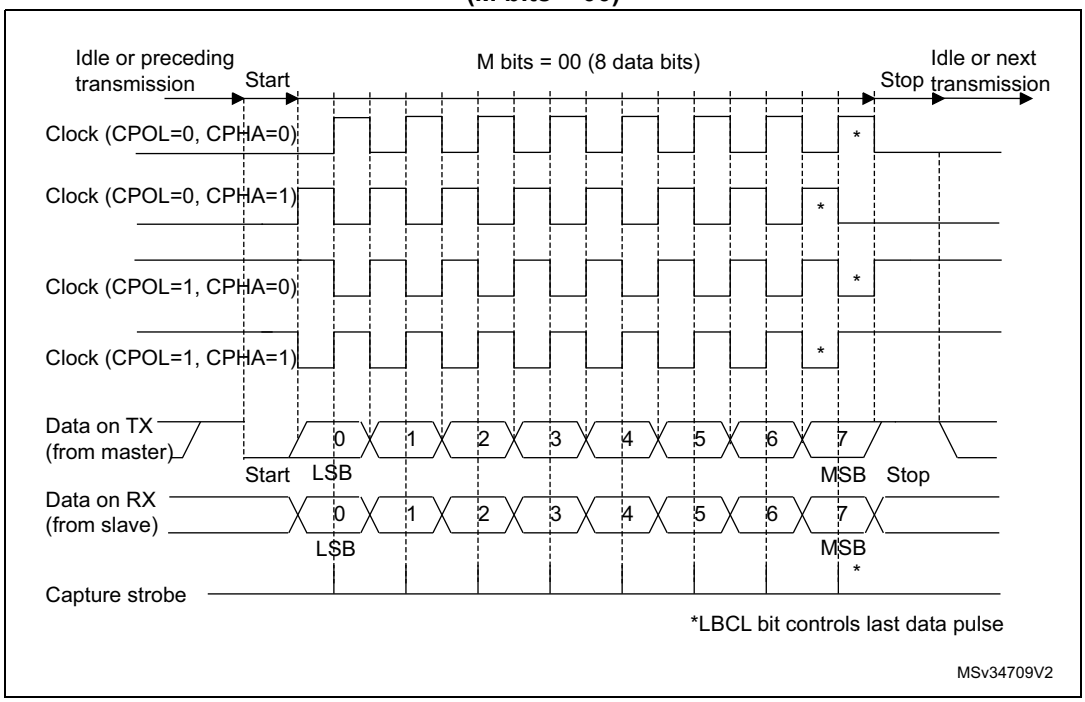

Figure 260. USART data clock timing diagram in synchronous master mode (M bits = 01)

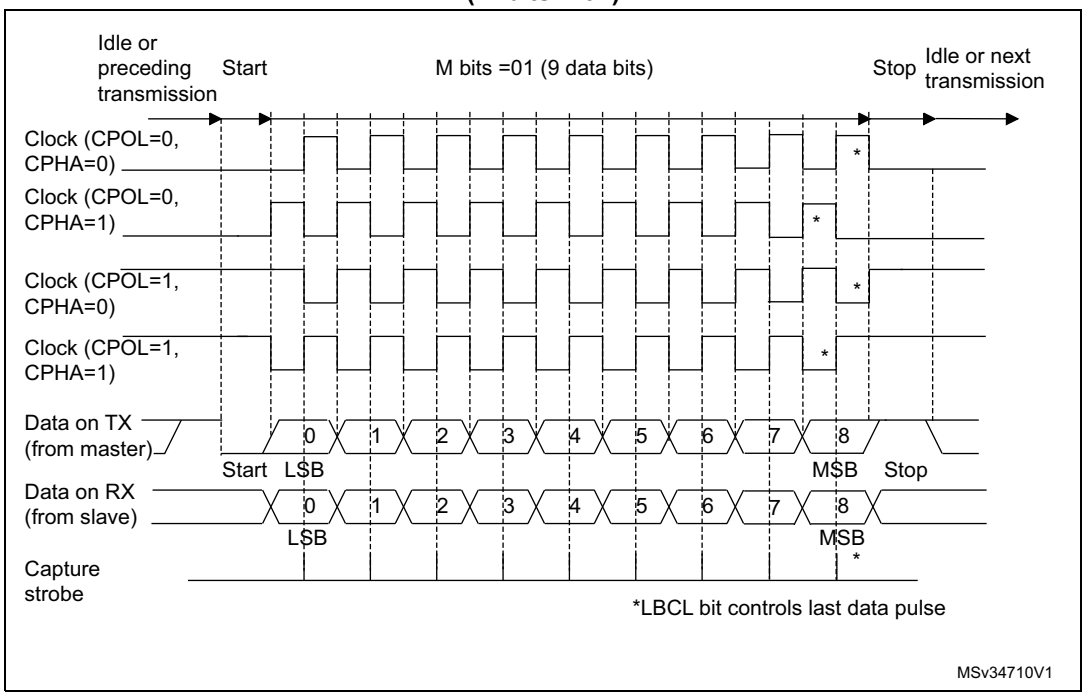

Slave mode

The synchronous slave mode is selected by programming the SLVEN bit in the USART_CR2 register to ‘1’. In synchronous slave mode, the following bits must be kept cleared:

- LINEN and CLKEN bits in the USART_CR2 register,
- SCEN, HDSEL and IREN bits in the USART_CR3 register.

In this mode, the USART can be used to control bidirectional synchronous serial communications in slave mode. The CK pin is the input of the USART in slave mode.

*Note: When the peripheral is used in SPI slave mode, the frequency of peripheral clock source (*usart_ker_ck_pres*) must be greater than 3 times the CK input frequency.*

The CPOL bit and the CPHA bit in the USART_CR2 register are used to select the clock polarity and the phase of the external clock, respectively (see *Figure 261*).

An underrun error flag is available in slave transmission mode. This flag is set when the first clock pulse for data transmission appears while the software has not yet loaded any value to USART_TDR.

The slave supports the hardware and software NSS management.

Figure 261. USART data clock timing diagram in synchronous slave mode (M bits = 00)

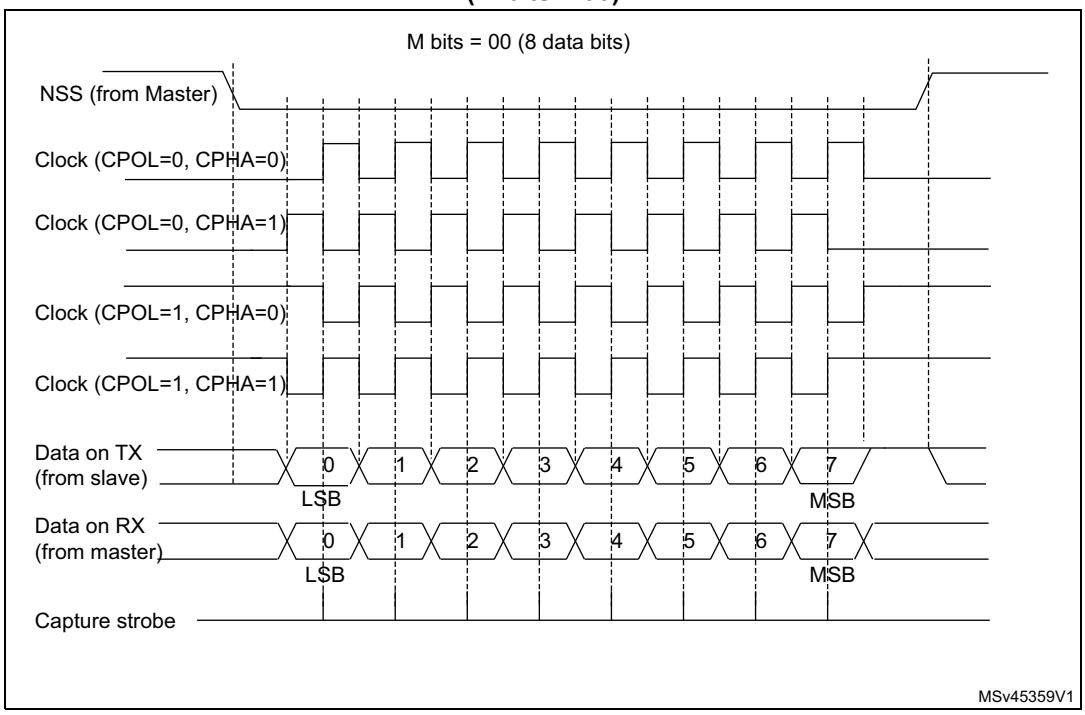

Slave select (NSS) pin management

The hardware or software slave select management can be set through the DIS_NSS bit in the USART_CR2 register:

- Software NSS management (DIS_NSS = 1)

  The SPI slave is always selected and NSS input pin is ignored.

  The external NSS pin remains free for other application uses.
- Hardware NSS management (DIS_NSS = 0)

  The SPI slave selection depends on NSS input pin. The slave is selected when NSS is low and deselected when NSS is high.

Note: The LBCL (used only on SPI master mode), CPOL and CPHA bits have to be selected when the USART is disabled (UE = 0) to ensure that the clock pulses function correctly.

In SPI slave mode, the USART must be enabled before starting the master communications (or between frames while the clock is stable). Otherwise, if the USART slave is enabled while the master is in the middle of a frame, it becomes desynchronized with the master. The data register of the slave needs to be ready before the first edge of the communication clock or before the end of the ongoing communication, otherwise the SPI slave transmits zeros.

SPI slave underrun error

When an underrun error occurs, the UDR flag is set in the USART_ISR register, and the SPI slave goes on sending the last data until the underrrun error flag is cleared by software.

The underrun flag is set at the beginning of the frame. An underrun error interrupt is triggered if EIE bit is set in the USART_CR3 register.

The underrun error flag is cleared by setting bit UDRCF in the USART_ICR register.

In case of underrun error, it is still possible to write to the TDR register. Clearing the underrun error enables sending new data.

If an underrun error occurred and there is no new data written in TDR, then the TC flag is set at the end of the frame.

Note: An underrun error may occur if the moment the data is written to the USART_TDR is too close to the first CK transmission edge. To avoid this underrun error, the USART_TDR should be written 3 usart_ker_ck *cycles before the first CK edge.*

28.5.15 USART single-wire half-duplex communication

Single-wire half-duplex mode is selected by setting the HDSEL bit in the USART_CR3 register. In this mode, the following bits must be kept cleared:

- LINEN and CLKEN bits in the USART_CR2 register,
- SCEN and IREN bits in the USART_CR3 register.

The USART can be configured to follow a single-wire half-duplex protocol where the TX and RX lines are internally connected. The selection between half- and Full-duplex communication is made with a control bit HDSEL in USART_CR3.

As soon as HDSEL is written to ‘1’:

- The TX and RX lines are internally connected.
- The RX pin is no longer used.
- The TX pin is always released when no data is transmitted. Thus, it acts as a standard I/O in idle or in reception. It means that the I/O must be configured so that TX is configured as alternate function open-drain with an external pull-up.

Apart from this, the communication protocol is similar to normal USART mode. Any conflict on the line must be managed by software (for instance by using a centralized arbiter). In particular, the transmission is never blocked by hardware and continues as soon as data are written in the data register while the TE bit is set.

28.5.16 USART receiver timeout

The receiver timeout feature is enabled by setting the RTOEN bit in the USART_CR2 control register.

The timeout duration is programmed using the RTO bitfields in the USART_RTOR register.

The receiver timeout counter starts counting:

- from the end of the stop bit if STOP = ‘00’ or STOP = ‘11’
- from the end of the second stop bit if STOP = ‘10’.
- from the beginning of the stop bit if STOP = ‘01’.

When the timeout duration has elapsed, the RTOF flag in the USART_ISR register is set. A timeout is generated if RTOIE bit in USART_CR1 register is set.

28.5.17 USART smartcard mode

This section is relevant only when smartcard mode is supported. Refer to *Section 28.4: USART implementation on page 838*.

Smartcard mode is selected by setting the SCEN bit in the USART_CR3 register. In smartcard mode, the following bits must be kept cleared:

- LINEN bit in the USART_CR2 register,
- HDSEL and IREN bits in the USART_CR3 register.

The CLKEN bit can also be set to provide a clock to the smartcard.

The smartcard interface is designed to support asynchronous smartcard protocol as defined in the ISO 7816-3 standard. Both T = 0 (character mode) and T = 1 (block mode) are supported.

The USART should be configured as:

- 8 bits plus parity: M = 1 and PCE = 1 in the USART_CR1 register
- 1.5 stop bits when transmitting and receiving data: STOP = '11' in the USART_CR2 register. It is also possible to choose 0.5 stop bit for reception.

In T = 0 (character) mode, the parity error is indicated at the end of each character during the guard time period.

Figure 262 shows examples of what can be seen on the data line with and without parity error.

Figure 262. ISO 7816-3 asynchronous protocol

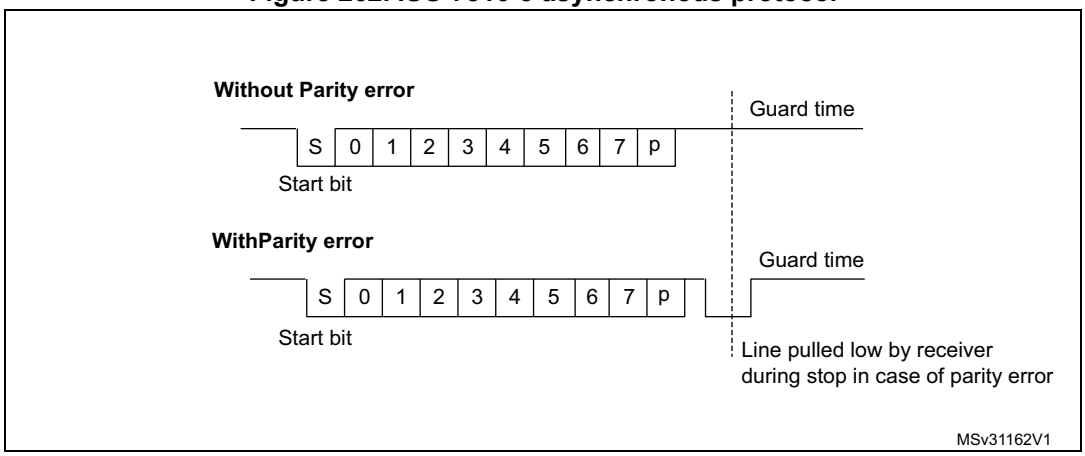

When connected to a smartcard, the TX output of the USART drives a bidirectional line that is also driven by the smartcard. The TX pin must be configured as open drain.

Smartcard mode implements a single wire half duplex communication protocol.

- Transmission of data from the transmit shift register is guaranteed to be delayed by a minimum of 1/2 baud clock. In normal operation a full transmit shift register starts shifting on the next baud clock edge. In smartcard mode this transmission is further delayed by a guaranteed 1/2 baud clock.
- In transmission, if the smartcard detects a parity error, it signals this condition to the USART by driving the line low (NACK). This NACK signal (pulling transmit line low for 1 baud clock) causes a framing error on the transmitter side (configured with 1.5 stop bits). The USART can handle automatic re-sending of data according to the protocol.

The number of retries is programmed in the SCARCNT bitfield. If the USART continues receiving the NACK after the programmed number of retries, it stops transmitting and signals the error as a framing error. The TXE bit (TXFNF bit in case FIFO mode is enabled) may be set using the TXFRQ bit in the USART_RQR register.

- Smartcard auto-retry in transmission: A delay of 2.5 baud periods is inserted between the NACK detection by the USART and the start bit of the repeated character. The TC bit is set immediately at the end of reception of the last repeated character (no guardtime). If the software wants to repeat it again, it must insure the minimum 2 baud periods required by the standard.
- If a parity error is detected during reception of a frame programmed with a 1.5 stop bit period, the transmit line is pulled low for a baud clock period after the completion of the receive frame. This is to indicate to the smartcard that the data transmitted to the USART has not been correctly received. A parity error is NACKed by the receiver if the NACK control bit is set, otherwise a NACK is not transmitted (to be used in T = 1 mode). If the received character is erroneous, the RXNE (RXFNE in case FIFO mode is enabled)/receive DMA request is not activated. According to the protocol specification, the smartcard must resend the same character. If the received character is still erroneous after the maximum number of retries specified in the SCARCNT bitfield, the USART stops transmitting the NACK and signals the error as a parity error.
- Smartcard auto-retry in reception: the BUSY flag remains set if the USART NACKs the card but the card doesn't repeat the character.
- In transmission, the USART inserts the Guard Time (as programmed in the Guard Time register) between two successive characters. As the Guard Time is measured after the stop bit of the previous character, the GT[7:0] register must be programmed to the desired CGT (Character Guard Time, as defined by the 7816-3 specification) minus 12 (the duration of one character).
- The assertion of the TC flag can be delayed by programming the Guard Time register. In normal operation, TC is asserted when the transmit shift register is empty and no further transmit requests are outstanding. In smartcard mode an empty transmit shift register triggers the Guard Time counter to count up to the programmed value in the Guard Time register. TC is forced low during this time. When the Guard Time counter reaches the programmed value TC is asserted high. The TCBGT flag can be used to detect the end of data transfer without waiting for guard time completion. This flag is set just after the end of frame transmission and if no NACK has been received from the card.
- The deassertion of TC flag is unaffected by smartcard mode.
- If a framing error is detected on the transmitter end (due to a NACK from the receiver), the NACK is not detected as a start bit by the receive block of the transmitter. According to the ISO protocol, the duration of the received NACK can be 1 or 2 baud clock periods.
- On the receiver side, if a parity error is detected and a NACK is transmitted the receiver does not detect the NACK as a start bit.

Note: Break characters are not significant in smartcard mode. A 0x00 data with a framing error is treated as data and not as a break.

No Idle frame is transmitted when toggling the TE bit. The Idle frame (as defined for the other configurations) is not defined by the ISO protocol.

Figure 263 shows how the NACK signal is sampled by the USART. In this example the USART is transmitting data and is configured with 1.5 stop bits. The receiver part of the USART is enabled in order to check the integrity of the data and the NACK signal.

Figure 263. Parity error detection using the 1.5 stop bits

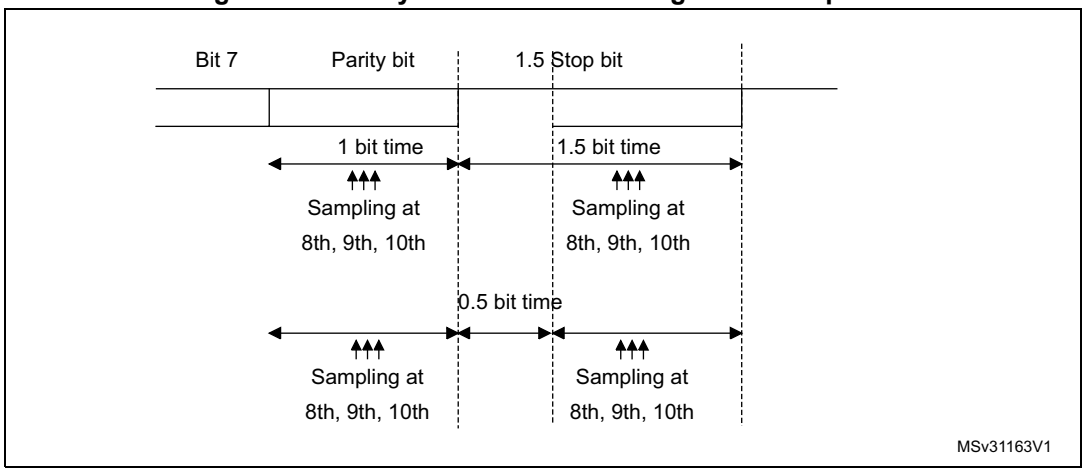

The USART can provide a clock to the smartcard through the CK output. In smartcard mode, CK is not associated to the communication but is simply derived from the internal peripheral input clock through a 5-bit prescaler. The division ratio is configured in the USART_GTPR register. CK frequency can be programmed from usart_ker_ck_pres/2 to usart_ker_ck_pres/62, where usart_ker_ck_pres is the peripheral input clock divided by a programmed prescaler.

Block mode (T = 1)

In T = 1 (block) mode, the parity error transmission can be deactivated by clearing the NACK bit in the USART_CR3 register.

When requesting a read from the smartcard, in block mode, the software must program the RTOR register to the BWT (block wait time) - 11 value. If no answer is received from the card before the expiration of this period, a timeout interrupt is generated. If the first character is received before the expiration of the period, it is signaled by the RXNE/RXFNE interrupt.

Note: The RXNE/RXFNE interrupt must be enabled even when using the USART in DMA mode to read from the smartcard in block mode. In parallel, the DMA must be enabled only after the first received byte.

After the reception of the first character (RXNE/RXFNE interrupt), the RTO register must be programmed to the CWT (character wait time -11 value), in order to enable the automatic check of the maximum wait time between two consecutive characters. This time is expressed in baud time units. If the smartcard does not send a new character in less than the CWT period after the end of the previous character, the USART signals it to the software through the RTOF flag and interrupt (when RTOIE bit is set).

Note: As in the smartcard protocol definition, the BWT/CWT values should be defined from the beginning (start bit) of the last character. The RTO register must be programmed to BWT - 11 or CWT -11, respectively, taking into account the length of the last character itself.

A block length counter is used to count all the characters received by the USART. This counter is reset when the USART is transmitting. The length of the block is communicated by the smartcard in the third byte of the block (prologue field). This value must be programmed to the BLEN field in the USART_RTOR register. When using DMA mode, before the start of the block, this register field must be programmed to the minimum value

(0x0). With this value, an interrupt is generated after the 4th received character. The software must read the LEN field (third byte), its value must be read from the receive buffer.

In interrupt driven receive mode, the length of the block may be checked by software or by programming the BLEN value. However, before the start of the block, the maximum value of BLEN (0xFF) may be programmed. The real value is programmed after the reception of the third character.

If the block is using the LRC longitudinal redundancy check (1 epilogue byte), the BLEN = LEN. If the block is using the CRC mechanism (2 epilog bytes), BLEN = LEN+1 must be programmed. The total block length (including prologue, epilogue and information fields) equals BLEN+4. The end of the block is signaled to the software through the EOBF flag and interrupt (when EOBIE bit is set).

In case of an error in the block length, the end of the block is signaled by the RTO interrupt (Character Wait Time overflow).

Note: The error checking code (LRC/CRC) must be computed/verified by software.

Direct and inverse convention

The smartcard protocol defines two conventions: direct and inverse.

The direct convention is defined as: LSB first, logical bit value of 1 corresponds to a H state of the line and parity is even. In order to use this convention, the following control bits must be programmed: MSBFIRST = 0, DATAINV = 0 (default values).

The inverse convention is defined as: MSB first, logical bit value 1 corresponds to an L state on the signal line and parity is even. In order to use this convention, the following control bits must be programmed: MSBFIRST = 1, DATAINV = 1.

Note: When logical data values are inverted (0 = H, 1 = L), the parity bit is also inverted in the same way.

In order to recognize the card convention, the card sends the initial character, TS, as the first character of the ATR (Answer To Reset) frame. The two possible patterns for the TS are: LHHL LLL LLH and LHHL HHH LLH.

- (H) LHHL LLL LLH sets up the inverse convention: state L encodes value 1 and moment 2 conveys the most significant bit (MSB first). When decoded by inverse convention, the conveyed byte is equal to '3F'.
- (H) LHHL HHH LLH sets up the direct convention: state H encodes value 1 and moment 2 conveys the least significant bit (LSB first). When decoded by direct convention, the conveyed byte is equal to '3B'.

Character parity is correct when there is an even number of bits set to 1 in the nine moments 2 to 10.

As the USART does not know which convention is used by the card, it needs to be able to recognize either pattern and act accordingly. The pattern recognition is not done in hardware, but through a software sequence. Moreover, assuming that the USART is configured in direct convention (default) and the card answers with the inverse convention, TS = LHHL LLL LLH results in a USART received character of 03 and an odd parity.

Therefore, two methods are available for TS pattern recognition:

Method 1

The USART is programmed in standard smartcard mode/direct convention. In this case, the TS pattern reception generates a parity error interrupt and error signal to the card.

- The parity error interrupt informs the software that the card did not answer correctly in direct convention. Software then reprograms the USART for inverse convention
- In response to the error signal, the card retries the same TS character, and it is correctly received this time, by the reprogrammed USART.

Alternatively, in answer to the parity error interrupt, the software may decide to reprogram the USART and to also generate a new reset command to the card, then wait again for the TS.

Method 2

The USART is programmed in 9-bit/no-parity mode, no bit inversion. In this mode it receives any of the two TS patterns as:

(H) LHHL LLL LLH = 0x103: inverse convention to be chosen

(H) LHHL HHH LLH = 0x13B: direct convention to be chosen

The software checks the received character against these two patterns and, if any of them match, then programs the USART accordingly for the next character reception.

If none of the two is recognized, a card reset may be generated in order to restart the negotiation.

28.5.18 USART IrDA SIR ENDEC block

This section is relevant only when IrDA mode is supported. Refer to *Section 28.4: USART implementation on page 838*.

IrDA mode is selected by setting the IREN bit in the USART_CR3 register. In IrDA mode, the following bits must be kept cleared:

- LINEN, STOP and CLKEN bits in the USART_CR2 register,
- SCEN and HDSEL bits in the USART_CR3 register.

The IrDA SIR physical layer specifies use of a Return to Zero, Inverted (RZI) modulation scheme that represents logic 0 as an infrared light pulse (see *Figure 264*).

The SIR Transmit encoder modulates the Non Return to Zero (NRZ) transmit bit stream output from USART. The output pulse stream is transmitted to an external output driver and infrared LED. USART supports only bit rates up to 115.2 kbaud for the SIR ENDEC. In normal mode the transmitted pulse width is specified as 3/16 of a bit period.

The SIR receive decoder demodulates the return-to-zero bit stream from the infrared detector and outputs the received NRZ serial bit stream to the USART. The decoder input is normally high (marking state) in the Idle state. The transmit encoder output has the opposite polarity to the decoder input. A start bit is detected when the decoder input is low.

- IrDA is a half duplex communication protocol. If the Transmitter is busy (when the USART is sending data to the IrDA encoder), any data on the IrDA receive line is ignored by the IrDA decoder and if the Receiver is busy (when the USART is receiving decoded data from the USART), data on the TX from the USART to IrDA is not

encoded. While receiving data, transmission should be avoided as the data to be transmitted could be corrupted.

- A ‘0‘ is transmitted as a high pulse and a ‘1’ is transmitted as a ‘0’. The width of the pulse is specified as 3/16th of the selected bit period in normal mode (see *Figure 265*).
- The SIR decoder converts the IrDA compliant receive signal into a bit stream for USART.
- The SIR receive logic interprets a high state as a logic one and low pulses as logic zeros.
- The transmit encoder output has the opposite polarity to the decoder input. The SIR output is in low state when Idle.
- The IrDA specification requires the acceptance of pulses greater than 1.41 µs. The acceptable pulse width is programmable. Glitch detection logic on the receiver end filters out pulses of width less than 2 PSC periods (PSC is the prescaler value programmed in the USART_GTPR). Pulses of width less than 1 PSC period are always rejected, but those of width greater than one and less than two periods may be accepted or rejected, those greater than two periods are accepted as a pulse. The IrDA encoder/decoder doesn’t work when PSC = 0.
- The receiver can communicate with a low-power transmitter.
- In IrDA mode, the stop bits in the USART_CR2 register must be configured to ‘1 stop bit’.

IrDA low-power mode

- Transmitter

  In low-power mode, the pulse width is not maintained at 3/16 of the bit period. Instead, the width of the pulse is 3 times the low-power baud rate which can be a minimum of 1.42 MHz. Generally, this value is 1.8432 MHz (1.42 MHz < PSC < 2.12 MHz). A low-power mode programmable divisor divides the system clock to achieve this value.
- Receiver

  Receiving in low-power mode is similar to receiving in normal mode. For glitch detection the USART should discard pulses of duration shorter than 1/PSC. A valid low is accepted only if its duration is greater than 2 periods of the IrDA low-power Baud clock (PSC value in the USART_GTPR).

Note: A pulse of width less than two and greater than one PSC period(s) may or may not be rejected.

The receiver set up time should be managed by software. The IrDA physical layer specification specifies a minimum of 10 ms delay between transmission and reception (IrDA is a half duplex protocol).

Figure 264. IrDA SIR ENDEC block diagram

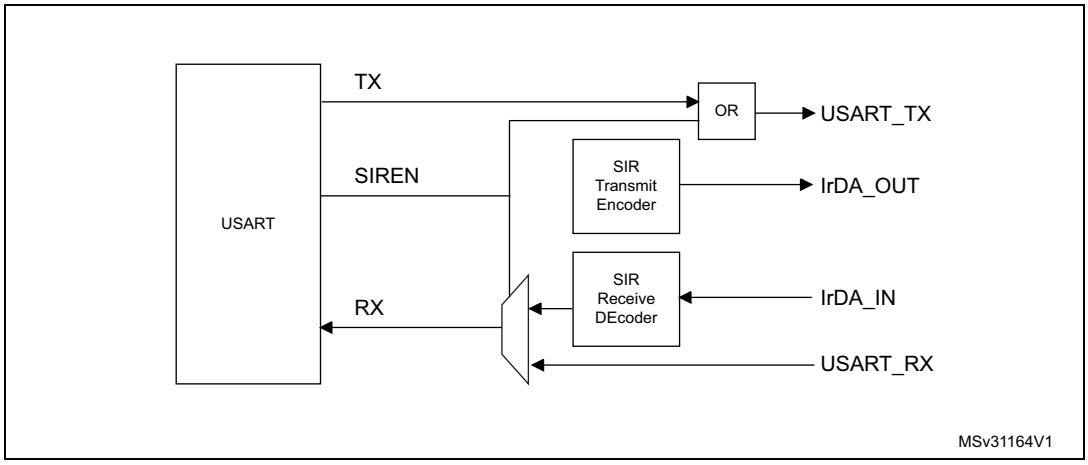

Figure 265. IrDA data modulation (3/16) - normal mode

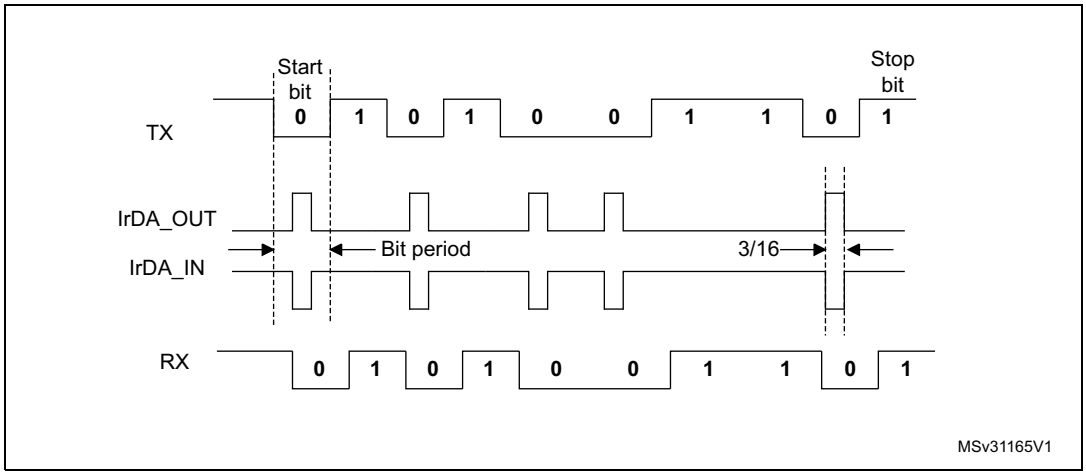

28.5.19 Continuous communication using USART and DMA

The USART is capable of performing continuous communications using the DMA. The DMA requests for Rx buffer and Tx buffer are generated independently.

Note: Refer to Section 28.4: USART implementation on page 838 to determine if the DMA mode is supported. If DMA is not supported, use the USART as explained in Section 28.5.6. To perform continuous communications when the FIFO is disabled, clear the TXE/ RXNE flags in the USART_ISR register.

Transmission using DMA

DMA mode can be enabled for transmission by setting DMAT bit in the USART_CR3 register. Data are loaded from an SRAM area configured using the DMA peripheral (refer to the corresponding *Direct memory access controller* section) to the USART_TDR register whenever the TXE flag (TXFNF flag if FIFO mode is enabled) is set. To map a DMA channel for USART transmission, use the following procedure (x denotes the channel number):

1. Write the USART_TDR register address in the DMA control register to configure it as the destination of the transfer. The data is moved to this address from memory after each TXE (or TXFNF if FIFO mode is enabled) event.
2. Write the memory address in the DMA control register to configure it as the source of the transfer. The data is loaded into the USART_TDR register from this memory area after each TXE (or TXFNF if FIFO mode is enabled) event.
3. Configure the total number of bytes to be transferred to the DMA control register.
4. Configure the channel priority in the DMA register
5. Configure DMA interrupt generation after half/ full transfer as required by the application.
6. Clear the TC flag in the USART_ISR register by setting the TCCF bit in the USART_ICR register.
7. Activate the channel in the DMA register.

When the number of data transfers programmed in the DMA Controller is reached, the DMA controller generates an interrupt on the DMA channel interrupt vector.

In transmission mode, once the DMA has written all the data to be transmitted (the TCIF flag is set in the DMA_ISR register), the TC flag can be monitored to make sure that the USART communication is complete. This is required to avoid corrupting the last transmission before disabling the USART or before the system enters a low-power mode when the peripheral clock is disabled. Software must wait until TC = 1. The TC flag remains cleared during all data transfers and it is set by hardware at the end of transmission of the last frame.

Figure 266. Transmission using DMA

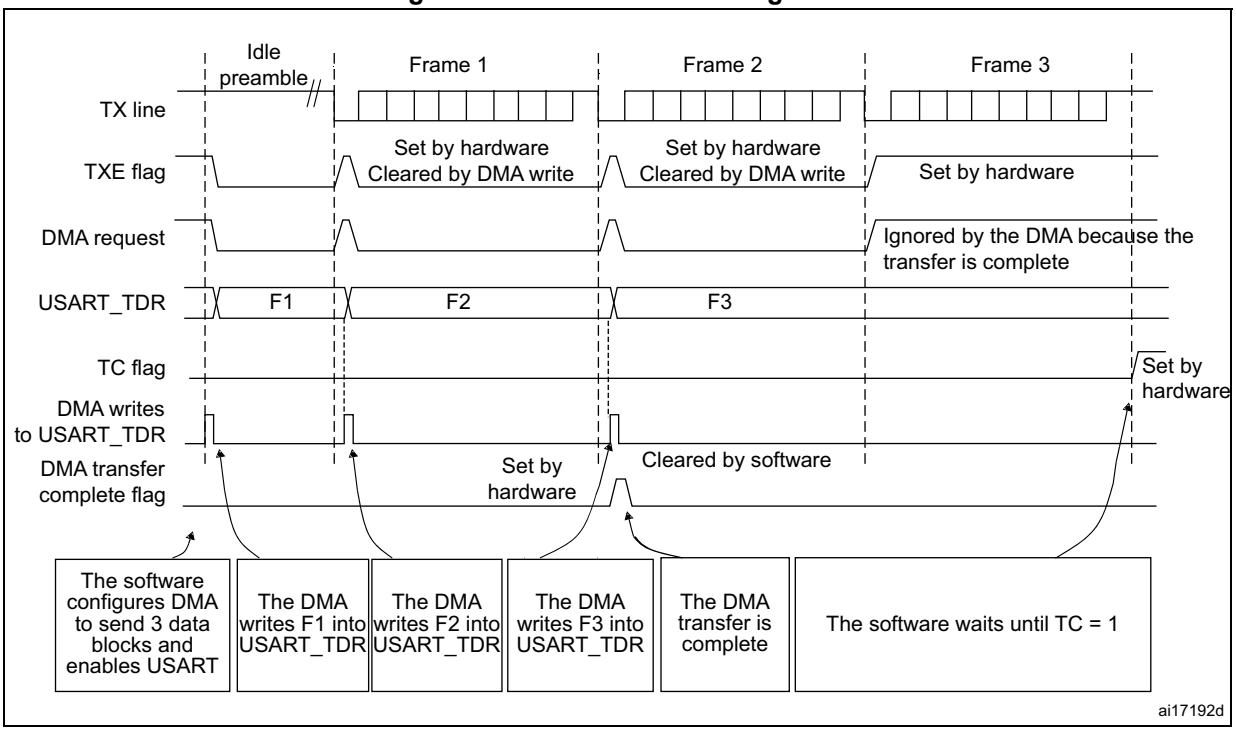

Note: When FIFO management is enabled, the DMA request is triggered by Transmit FIFO not full (i.e. TXFNF = 1).

Reception using DMA

DMA mode can be enabled for reception by setting the DMAR bit in USART_CR3 register. Data are loaded from the USART_RDR register to an SRAM area configured using the DMA peripheral (refer to the corresponding *Direct memory access controller* section) whenever a data byte is received. To map a DMA channel for USART reception, use the following procedure:

1. Write the USART_RDR register address in the DMA control register to configure it as the source of the transfer. The data is moved from this address to the memory after each RXNE (RXFNE in case FIFO mode is enabled) event.
2. Write the memory address in the DMA control register to configure it as the destination of the transfer. The data is loaded from USART_RDR to this memory area after each RXNE (RXFNE in case FIFO mode is enabled) event.
3. Configure the total number of bytes to be transferred to the DMA control register.
4. Configure the channel priority in the DMA control register
5. Configure interrupt generation after half/ full transfer as required by the application.
6. Activate the channel in the DMA control register.

When the number of data transfers programmed in the DMA Controller is reached, the DMA controller generates an interrupt on the DMA channel interrupt vector.

Figure 267. Reception using DMA

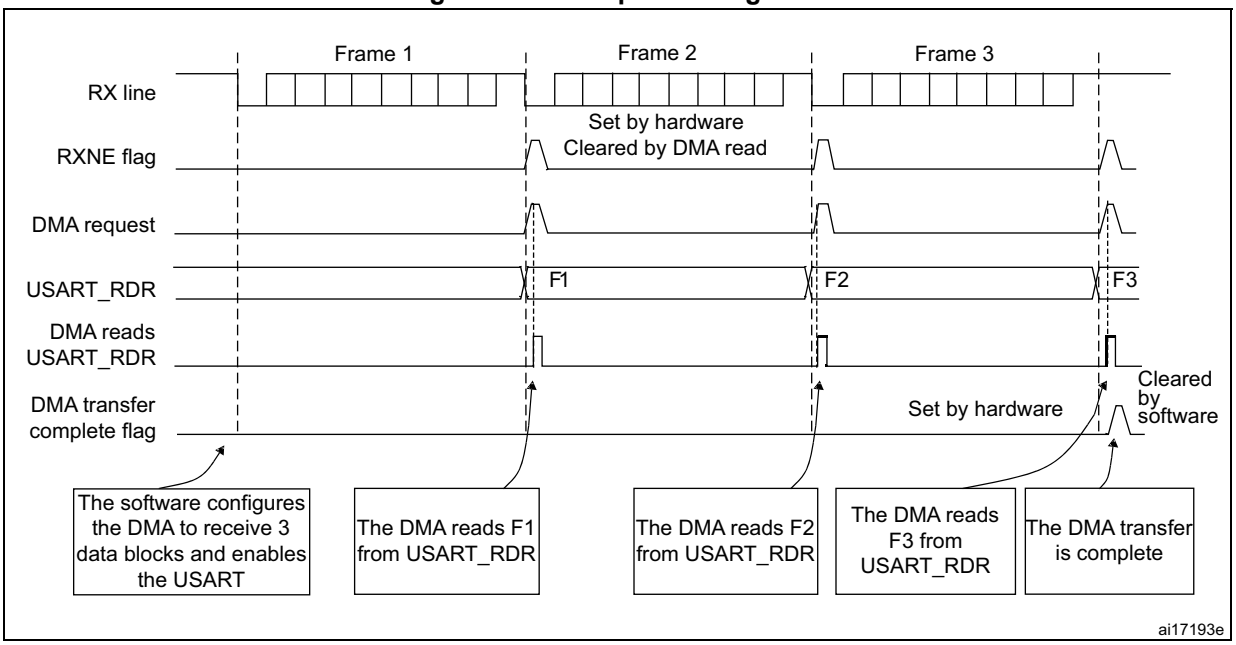

Note: When FIFO management is enabled, the DMA request is triggered by Receive FIFO not empty (i.e. RXFNE = 1).

Error flagging and interrupt generation in multibuffer communication

If any error occurs during a transaction in multibuffer communication mode, the error flag is asserted after the current byte. An interrupt is generated if the interrupt enable flag is set. For framing error, overrun error and noise flag which are asserted with RXNE (RXFNE in case FIFO mode is enabled) in single byte reception, there is a separate error flag interrupt enable bit (EIE bit in the USART_CR3 register), which, if set, enables an interrupt after the current byte if any of these errors occur.

28.5.20 RS232 hardware flow control and RS485 Driver Enable

It is possible to control the serial data flow between 2 devices by using the CTS input and the RTS output. The *Figure 268* shows how to connect 2 devices in this mode:

Figure 268. Hardware flow control between 2 USARTs

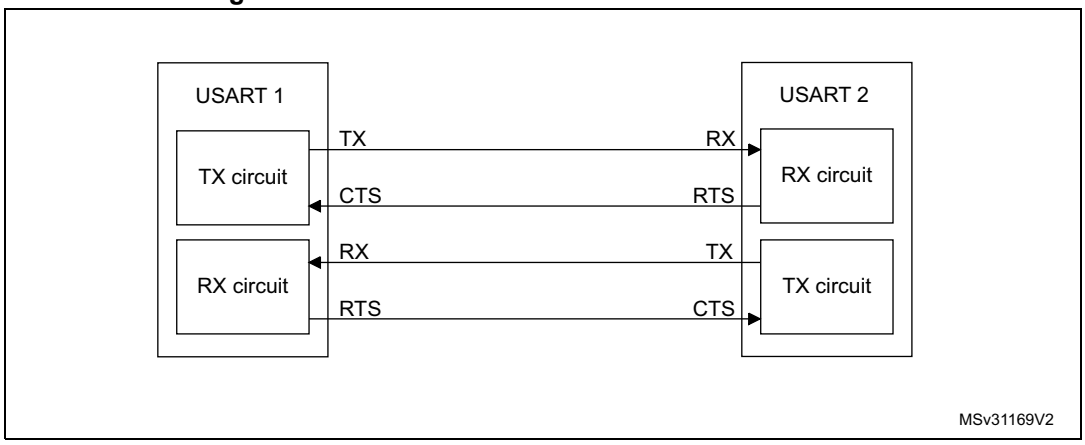

RS232 RTS and CTS flow control can be enabled independently by writing the RTSE and CTSE bits to '1' in the USART_CR3 register.

RS232 RTS flow control

If the RTS flow control is enabled (RTSE = 1), then RTS is deasserted (tied low) as long as the USART receiver is ready to receive a new data. When the receive register is full, RTS is asserted, indicating that the transmission is expected to stop at the end of the current frame. *Figure 269* shows an example of communication with RTS flow control enabled.

Figure 269. RS232 RTS flow control

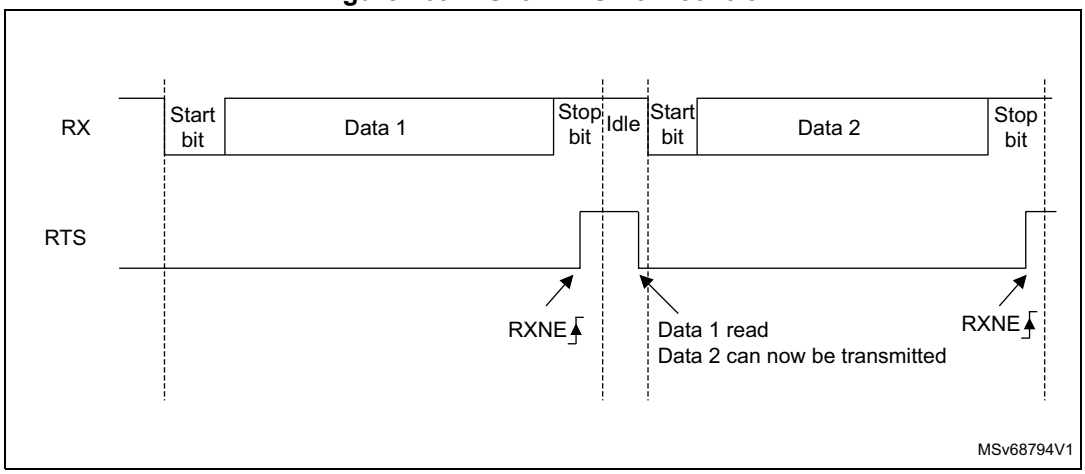

Note: When FIFO mode is enabled, RTS is asserted only when RXFIFO is full.

RS232 CTS flow control

If the CTS flow control is enabled (CTSE = 1), then the transmitter checks the CTS input before transmitting the next frame. If CTS is deasserted (tied low), then the next data is transmitted (assuming that data is to be transmitted, in other words, if TXE/TXFE = 0), else the transmission does not occur. When CTS is asserted during a transmission, the current transmission is completed before the transmitter stops.

When CTSE = 1, the CTSIF status bit is automatically set by hardware as soon as the CTS input toggles. It indicates when the receiver becomes ready or not ready for communication. An interrupt is generated if the CTSIE bit in the USART_CR3 register is set. *Figure 270* shows an example of communication with CTS flow control enabled.

Figure 270. RS232 CTS flow control

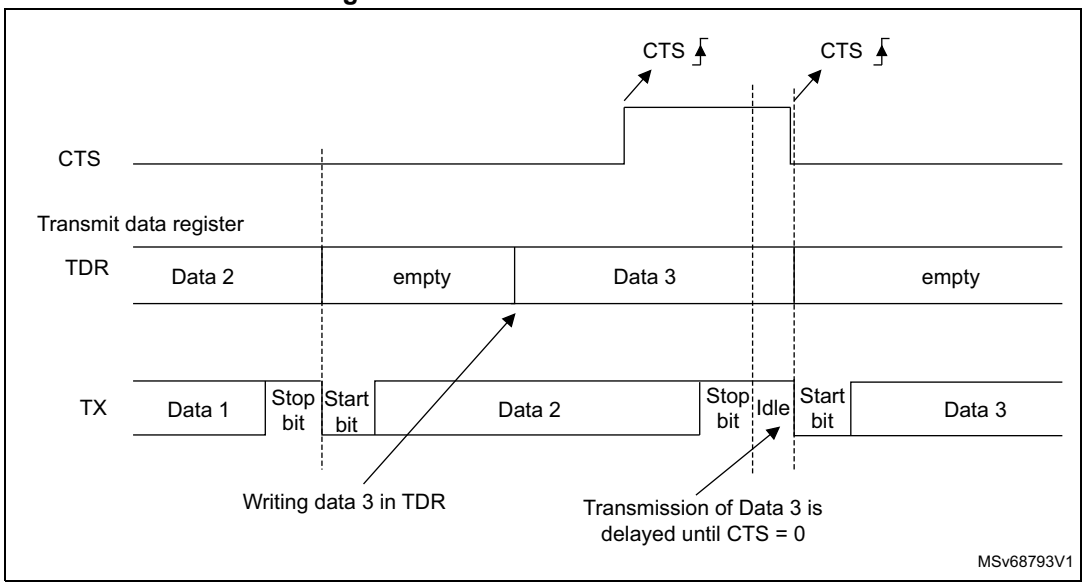

Note: For correct behavior, CTS must be deasserted at least 3 USART clock source periods before the end of the current character. In addition it should be noted that the CTSCF flag may not be set for pulses shorter than 2 x PCLK periods.

RS485 driver enable

The driver enable feature is enabled by setting bit DEM in the USART_CR3 control register. This enables the user to activate the external transceiver control, through the DE (Driver Enable) signal. The assertion time is the time between the activation of the DE signal and the beginning of the start bit. It is programmed using the DEAT [4:0] bitfields in the USART_CR1 control register. The deassertion time is the time between the end of the last stop bit, in a transmitted message, and the de-activation of the DE signal. It is programmed using the DEDT [4:0] bitfields in the USART_CR1 control register. The polarity of the DE signal can be configured using the DEP bit in the USART_CR3 control register.

In USART, the DEAT and DEDT are expressed in sample time units (1/8 or 1/16 bit time, depending on the oversampling rate).

28.5.21 USART low-power management

The USART has advanced low-power mode functions, that enables transferring properly data even when the usart_pclk clock is disabled.

The USART is able to wake up the MCU from low-power mode when the UESM bit is set.

When the usart_pclk is gated, the USART provides a wake-up interrupt (**usart_wkup**) if a specific action requiring the activation of the **usart_pclk** clock is needed:

- If FIFO mode is disabled

  usart_pclk clock has to be activated to empty the USART data register.

  In this case, the usart_wkup interrupt source is RXNE set to ‘1’. The RXNEIE bit must be set before entering low-power mode.
- If FIFO mode is enabled

  usart_pclk clock has to be activated to:
  - to fill the TXFIFO
  - or to empty the RXFIFO

  In this case, the usart_wkup interrupt source can be:
  - RXFIFO not empty. In this case, the RXFNEIE bit must be set before entering low-power mode.
  - RXFIFO full. In this case, the RXFFIE bit must be set before entering low-power mode, the number of received data corresponds to the RXFIFO size, and the RXFF flag is not set.
  - TXFIFO empty. In this case, the TXFEIE bit must be set before entering low-power mode.

  This enables sending/receiving the data in the TXFIFO/RXFIFO during low-power mode.

  To avoid overrun/underrun errors and transmit/receive data in low-power mode, the usart_wkup interrupt source can be one of the following events:
  - TXFIFO threshold reached. In this case, the TXFTIE bit must be set before entering low-power mode.
  - RXFIFO threshold reached. In this case, the RXFTIE bit must be set before entering low-power mode.

  For example, the application can set the threshold to the maximum RXFIFO size if the wake-up time is less than the time required to receive a single byte across the line.

  Using the RXFIFO full, TXFIFO empty, RXFIFO not empty and RXFIFO/TXFIFO threshold interrupts to wake up the MCU from low-power mode enables doing as many USART transfers as possible during low-power mode with the benefit of optimizing consumption.

Alternatively, a specific **usart_wkup** interrupt can be selected through the WUS bitfields.

When the wake-up event is detected, the WUF flag is set by hardware and a **usart_wkup** interrupt is generated if the WUFIE bit is set.

Note: Before entering low-power mode, make sure that no USART transfers are ongoing. Checking the BUSY flag cannot ensure that low-power mode is never entered when data reception is ongoing.

The WUF flag is set when a wake-up event is detected, independently of whether the MCU is in low-power or active mode.

When entering low-power mode just after having initialized and enabled the receiver, the REACK bit must be checked to make sure the USART is enabled.

When DMA is used for reception, it must be disabled before entering low-power mode and re-enabled when exiting from low-power mode.

When the FIFO is enabled, waking up from low-power mode on address match is only possible when mute mode is enabled.

Using mute mode with low-power mode

If the USART is put into mute mode before entering low-power mode:

- Wake-up from mute mode on idle detection must not be used, because idle detection cannot work in low-power mode.
- If the wake-up from mute mode on address match is used, then the low-power mode wake-up source must also be the address match. If the RXNE flag was set when entering the low-power mode, the interface remains in mute mode upon address match and wake up from low-power mode.

Note: When FIFO management is enabled, mute mode can be used with wake-up from low-power mode without any constraints (i.e.the two points mentioned above about mute and low-power mode are valid only when FIFO management is disabled).

Wake-up from low-power mode when USART kernel clock (usart_ker_ck) is OFF in low-power mode

If during low-power mode, the usart_ker_ck clock is switched OFF when a falling edge on the USART receive line is detected, the USART interface requests the usart_ker_ck clock to be switched ON thanks to the usart_ker_ck_req signal. usart_ker_ck is then used for the frame reception.

If the wake-up event is verified, the MCU wakes up from low-power mode and data reception goes on normally.

If the wake-up event is not verified, usart_ker_ck is switched OFF again, the MCU is not woken up and remains in low-power mode, and the kernel clock request is released.

The example below shows the case of a wake-up event programmed to “address match detection” and FIFO management disabled.

Figure 271 shows the USART behavior when the wake-up event is verified.

Figure 271. Wake-up event verified (wake-up event = address match, FIFO disabled)

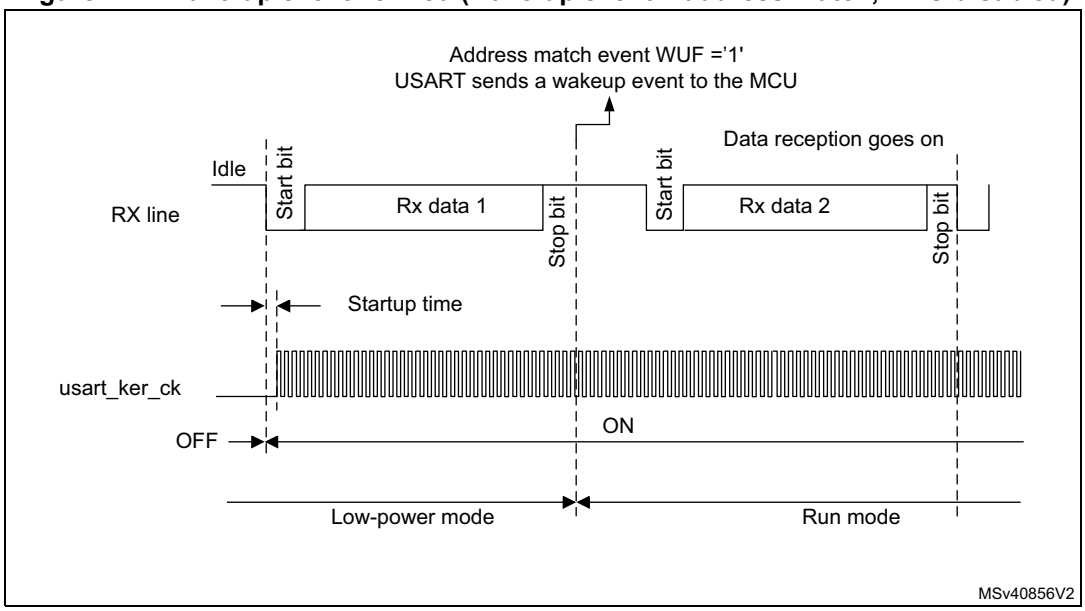

Figure 272 shows the USART behavior when the wake-up event is not verified.

Figure 272. Wake-up event not verified (wake-up event = address match, FIFO disabled)

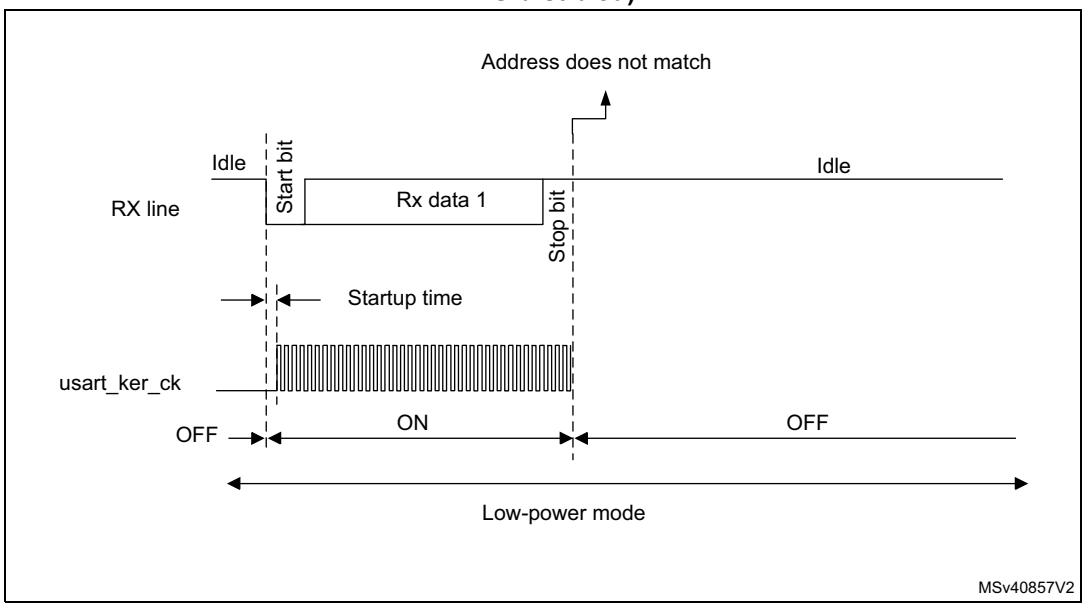

Note: The figures above are valid when address match or any received frame is used as wake-up event. If the wake-up event is the start bit detection, the USART sends the wake-up event to the MCU at the end of the start bit.

Determining the maximum USART baud rate that enables to correctly wake up the device from low-power mode

The maximum baud rate that enables to correctly wake up the device from low-power mode depends on the wake-up time parameter (refer to the device datasheet) and on the USART receiver tolerance (see *Section 28.5.8: Tolerance of the USART receiver to clock deviation*).

Let us take the example of OVER8 = 0, M bits = '01', ONEBIT = 0 and BRR [3:0] = 0000.

In these conditions, according to *Table 178: Tolerance of the USART receiver when BRR [3:0] = 0000*, the USART receiver tolerance equals 3.41%.

DTRA + DQUANT + DREC + DTCL + DWU < USART receiver tolerance

$D_{WUmax} = t_{WUUSART} / (11 \times T_{bit\ Min})$

$T_{bit\ Min} = t_{WUUSART} / (11 \times D_{WUmax})$

where $t_{WUUSART}$ is the wake-up time from low-power mode.

If we consider the ideal case where DTRA, DQUANT, DREC and DTCL parameters are at 0%, the maximum value of DWU is 3.41%. In reality, we need to consider at least the usart_ker_ck inaccuracy.

For example, if HSI is used as usart_ker_ck, and the HSI inaccuracy is of 1%, then we obtain:

$t_{WUUSART}$ = 3 µs (values provided only as examples; for correct values, refer to the device datasheet).

D_{WUmax} = 3.41% - 1% = 2.41%

$T_{bit\ min}$ = 3 µs/ (11 x 2.41%) = 11.32 µs.

As a result, the maximum baud rate that enables to wake up correctly from low-power mode is: 1/11.32 µs = 88.36 Kbaud.

28.6 USART in low-power modes

Table 181. Effect of low-power modes on the USART

Mode	Description
Sleep	No effect. USART interrupts cause the device to exit Sleep mode.
Stop(1)	The content of the USART registers is kept. The USART is able to wake up the microcontroller from Stop mode when the USART is clocked by an oscillator available in Stop mode.
Standby	The USART peripheral is powered down and must be reinitialized after exiting Standby mode.

1. Refer to *Section 28.4: USART implementation* to know if the wake-up from Stop mode is supported for a given peripheral instance. If an instance is not functional in a given Stop mode, it must be disabled before entering this Stop mode.

28.7 USART interrupts

Refer to *Table 182* for a detailed description of all USART interrupt requests.

Table 182. USART interrupt requests

Interrupt vector	Interrupt event	Event flag	Enable Control bit	Interrupt clear method	Exit from Sleep mode	Exit from Stop[1] modes	Exit from Standby mode
USART or UART	Transmit data register empty	TXE	TXEIE	Write TDR	Yes	No	No
	Transmit FIFO not Full	TXFNF	TXFNFIE	TXFIFO full		No	
	Transmit FIFO Empty	TXFE	TXFEIE	Write TDR or write 1 in TXFRQ		Yes	
	Transmit FIFO threshold reached	TXFT	TXFTIE	Write TDR		Yes	
	CTS interrupt	CTSIF	CTSIE	Write 1 in CTSCF		No	
	Transmission Complete	TC	TCIE	Write TDR or write 1 in TCCF		No	
	Transmission Complete Before Guard Time	TCBGT	TCBGTIE	Write TDR or write 1 in TCBGT		No	
USART or UART	Receive data register not empty (data ready to be read)	RXNE	RXNEIE	Read RDR or write 1 in RXFRQ	Yes	Yes	No
	Receive FIFO Not Empty	RXFNE	RXFNEIE	Read RDR until RXFIFO empty or write 1 in RXFRQ		Yes	
	Receive FIFO Full	RXFF[2]	RXFFIE	Read RDR		Yes	
	Receive FIFO threshold reached	RXFT	RXFTIE	Read RDR		Yes	
	Overrun error detected	ORE	RXNEIE/ RXFNEIE	Write 1 in ORECF		No	
	Idle line detected	IDLE	IDLEIE	Write 1 in IDLECF		No	
	Parity error	PE	PEIE	Write 1 in PECF		No	
	LIN break	LBDF	LBDIE	Write 1 in LBDCF		No	
	Noise error in multibuffer communication	NE	EIE	Write 1 in NFCF		No	
	Overrun error in multibuffer communication	ORE[3]		Write 1 in ORECF		No	
	Framing Error in multibuffer communication	FE		Write 1 in FECF		No	
	Character match	CMF	CMIE	Write 1 in CMCF		No	
	Receiver timeout	RTOF	RTOFIE	Write 1 in RTOCCF		No	
	End of Block	EOBF	EOBIE	Write 1 in EOBCF		No	
	Wake-up from low-power mode	WUF	WUFIE	Write 1 in WUC		Yes	
	SPI slave underrun error	UDR	EIE	Write 1 in UDRCF		No	

1. The USART can wake up the device from Stop mode only if the peripheral instance supports the wake-up from Stop mode feature. Refer to *Section 28.4: USART implementation* for the list of supported Stop modes.

2. RXFF flag is asserted if the USART receives n+1 data (n being the RXFIFO size): n data in the RXFIFO and 1 data in USART_RDR. In Stop mode, USART_RDR is not clocked. As a result, this register is not written and once n data are received and written in the RXFIFO, the RXFF interrupt is asserted (RXFF flag is not set).
3. When OVRDIS = 0.

28.8 USART registers

Refer to *Section 1.2 on page 50* for a list of abbreviations used in register descriptions.

The peripheral registers have to be accessed by words (32 bits).

28.8.1 USART control register 1 (USART_CR1)

Address offset: 0x00

Reset value: 0x0000 0000

The same register can be used in FIFO mode enabled (this section) and FIFO mode disabled (next section).

FIFO mode enabled

31	30	29	28	27	26	25	24	23	22	21	20	19	18	17	16
RXFFIE	TXFEIE	FIFOEN	M1	EOBIE	RTOIE	DEAT[4:0]					DEDT[4:0]				
rw	rw	rw	rw	rw	rw	rw	rw	rw	rw	rw	rw	rw	rw	rw	rw

15	14	13	12	11	10	9	8	7	6	5	4	3	2	1	0
OVER8	CMIE	MME	M0	WAKE	PCE	PS	PEIE	TXFNFIE	TCIE	RXFNEIE	IDLEIE	TE	RE	UESM	UE
rw	rw	rw	rw	rw	rw	rw	rw	rw	rw	rw	rw	rw	rw	rw	rw

Bit 31 **RXFFIE**: RXFIFO full interrupt enable
This bit is set and cleared by software.
0: Interrupt inhibited
1: USART interrupt generated when RXFF = 1 in the USART_ISR register

Bit 30 **TXFEIE**: TXFIFO empty interrupt enable
This bit is set and cleared by software.
0: Interrupt inhibited
1: USART interrupt generated when TXFE = 1 in the USART_ISR register

Bit 29 **FIFOEN**: FIFO mode enable
This bit is set and cleared by software.
0: FIFO mode is disabled.
1: FIFO mode is enabled.
This bitfield can only be written when the USART is disabled (UE = 0).

Note: FIFO mode can be used on standard UART communication, in SPI master/slave mode and in smartcard modes only. It must not be enabled in IrDA and LIN modes.

Bit 28 **M1**: Word length

This bit must be used in conjunction with bit 12 (M0) to determine the word length. It is set or cleared by software.

M[1:0] = ‘00’: 1 start bit, 8 Data bits, n Stop bit

M[1:0] = ‘01’: 1 start bit, 9 Data bits, n Stop bit

M[1:0] = ‘10’: 1 start bit, 7 Data bits, n Stop bit

This bit can only be written when the USART is disabled (UE = 0).

Note: In 7-bits data length mode, the smartcard mode, LIN master mode and auto baud rate (0x7F and 0x55 frames detection) are not supported.

Bit 27 **EOBIE**: End-of-block interrupt enable

This bit is set and cleared by software.

0: Interrupt inhibited

1: USART interrupt generated when the EOBF flag is set in the USART_ISR register

Note: If the USART does not support smartcard mode, this bit is reserved and must be kept at reset value. Refer to Section 28.4: USART implementation on page 838.

Bit 26 **RTOIE**: Receiver timeout interrupt enable

This bit is set and cleared by software.

0: Interrupt inhibited

1: USART interrupt generated when the RTOF bit is set in the USART_ISR register.

Note: If the USART does not support the Receiver timeout feature, this bit is reserved and must be kept at reset value. Section 28.4: USART implementation on page 838.

Bits 25:21 **DEAT[4:0]**: Driver enable assertion time

This 5-bit value defines the time between the activation of the DE (Driver Enable) signal and the beginning of the start bit. It is expressed in sample time units (1/8 or 1/16 bit time, depending on the oversampling rate).

This bitfield can only be written when the USART is disabled (UE = 0).

Note: If the Driver Enable feature is not supported, this bit is reserved and must be kept at reset value. Refer to Section 28.4: USART implementation on page 838.

Bits 20:16 **DEDT[4:0]**: Driver enable deassertion time

This 5-bit value defines the time between the end of the last stop bit, in a transmitted message, and the de-activation of the DE (Driver Enable) signal. It is expressed in sample time units (1/8 or 1/16 bit time, depending on the oversampling rate).

If the USART_TDR register is written during the DEDT time, the new data is transmitted only when the DEDT and DEAT times have both elapsed.

This bitfield can only be written when the USART is disabled (UE = 0).

Note: If the Driver Enable feature is not supported, this bit is reserved and must be kept at reset value. Refer to Section 28.4: USART implementation on page 838.

Bit 15 **OVER8**: Oversampling mode

0: Oversampling by 16

1: Oversampling by 8

This bit can only be written when the USART is disabled (UE = 0).

Note: In LIN, IrDA and smartcard modes, this bit must be kept cleared.

Bit 14 **CMIE**: Character match interrupt enable

This bit is set and cleared by software.

0: Interrupt inhibited

1: USART interrupt generated when the CMF bit is set in the USART_ISR register.

Bit 13 **MME**: Mute mode enable

This bit enables the USART mute mode function. When set, the USART can switch between active and mute mode, as defined by the WAKE bit. It is set and cleared by software.

0: Receiver in active mode permanently

1: Receiver can switch between mute mode and active mode.

Bit 12 **M0**: Word length

This bit is used in conjunction with bit 28 (M1) to determine the word length. It is set or cleared by software (refer to bit 28 (M1)description).

This bit can only be written when the USART is disabled (UE = 0).

Bit 11 **WAKE**: Receiver wake-up method

This bit determines the USART wake-up method from mute mode. It is set or cleared by software.

0: Idle line

1: Address mark

This bitfield can only be written when the USART is disabled (UE = 0).

Bit 10 **PCE**: Parity control enable

This bit selects the hardware parity control (generation and detection). When the parity control is enabled, the computed parity is inserted at the MSB position (9th bit if M = 1; 8th bit if M = 0) and the parity is checked on the received data. This bit is set and cleared by software. Once it is set, PCE is active after the current byte (in reception and in transmission).

0: Parity control disabled

1: Parity control enabled

This bitfield can only be written when the USART is disabled (UE = 0).

Bit 9 **PS**: Parity selection

This bit selects the odd or even parity when the parity generation/detection is enabled (PCE bit set). It is set and cleared by software. The parity is selected after the current byte.

0: Even parity

1: Odd parity

This bitfield can only be written when the USART is disabled (UE = 0).

Bit 8 **PEIE**: PE interrupt enable

This bit is set and cleared by software.

0: Interrupt inhibited

1: USART interrupt generated whenever PE = 1 in the USART_ISR register

Bit 7 **TXFNFIE**: TXFIFO not-full interrupt enable

This bit is set and cleared by software.

0: Interrupt inhibited

1: USART interrupt generated whenever TXFNF =1 in the USART_ISR register

Bit 6 **TCIE**: Transmission complete interrupt enable

This bit is set and cleared by software.

0: Interrupt inhibited

1: USART interrupt generated whenever TC = 1 in the USART_ISR register

Bit 5 **RXFNEIE**: RXFIFO not empty interrupt enable

This bit is set and cleared by software.

0: Interrupt inhibited

1: USART interrupt generated whenever ORE = 1 or RXFNE = 1 in the USART_ISR register

Bit 4 **IDLEIE**: IDLE interrupt enable

This bit is set and cleared by software.

0: Interrupt inhibited

1: USART interrupt generated whenever IDLE = 1 in the USART_ISR register

Bit 3 **TE**: Transmitter enable

This bit enables the transmitter. It is set and cleared by software.

0: Transmitter is disabled

1: Transmitter is enabled

Note: During transmission, a low pulse on the TE bit ('0' followed by '1') sends a preamble (idle line) after the current word, except in smartcard mode. In order to generate an idle character, the TE must not be immediately written to '1'. To ensure the required duration, the software can poll the TEACK bit in the USART_ISR register.

In smartcard mode, when TE is set, there is a 1 bit-time delay before the transmission starts.

Bit 2 **RE**: Receiver enable

This bit enables the receiver. It is set and cleared by software.

0: Receiver is disabled

1: Receiver is enabled and begins searching for a start bit

Bit 1 **UESM**: USART enable in low-power mode

When this bit is cleared, the USART cannot wake up the MCU from low-power mode.

When this bit is set, the USART can wake up the MCU from low-power mode.

This bit is set and cleared by software.

0: USART not able to wake up the MCU from low-power mode.

1: USART able to wake up the MCU from low-power mode.

Note: It is recommended to set the UESM bit just before entering low-power mode and clear it when exit from low-power mode.

If the USART does not support the wake-up from Stop feature, this bit is reserved and must be kept at reset value. Refer to Section 28.4: USART implementation on page 838.

Bit 0 **UE**: USART enable

When this bit is cleared, the USART prescalers and outputs are stopped immediately, and all current operations are discarded. The USART configuration is kept, but all the USART_ISR status flags are reset. This bit is set and cleared by software.

0: USART prescaler and outputs disabled, low-power mode

1: USART enabled

Note: To enter low-power mode without generating errors on the line, the TE bit must be previously reset and the software must wait for the TC bit in the USART_ISR to be set before resetting the UE bit.

The DMA requests are also reset when UE = 0 so the DMA channel must be disabled before resetting the UE bit.

In smartcard mode, (SCEN = 1), the CK is always available when CLKEN = 1, regardless of the UE bit value.

28.8.2 USART control register 1 [alternate] (USART_CR1)

Address offset: 0x00

Reset value: 0x0000 0000

The same register can be used in FIFO mode enabled (previous section) and FIFO mode disabled (this section).

FIFO mode disabled

31	30	29	28	27	26	25	24	23	22	21	20	19	18	17	16
Res.	Res.	FIFO EN	M1	EOBIE	RTOIE	DEAT[4:0]					DEDT[4:0]				
		rw	rw	rw	rw	rw	rw	rw	rw	rw	rw	rw	rw	rw	rw
15	14	13	12	11	10	9	8	7	6	5	4	3	2	1	0
OVER8	CMIE	MME	M0	WAKE	PCE	PS	PEIE	TXEIE	TCIE	RXNEIE	IDLEIE	TE	RE	UESM	UE
rw	rw	rw	rw	rw	rw	rw	rw	rw	rw	rw	rw	rw	rw	rw	rw

Bits 31:30 Reserved, must be kept at reset value.

Bit 29 **FIFOEN**: FIFO mode enable

This bit is set and cleared by software.

0: FIFO mode is disabled.

1: FIFO mode is enabled.

This bitfield can only be written when the USART is disabled (UE = 0).

Note: FIFO mode can be used on standard UART communication, in SPI master/slave mode and in smartcard modes only. It must not be enabled in IrDA and LIN modes.

Bit 28 **M1**: Word length

This bit must be used in conjunction with bit 12 (M0) to determine the word length. It is set or cleared by software.

M[1:0] = ‘00’: 1 start bit, 8 Data bits, n Stop bit

M[1:0] = ‘01’: 1 start bit, 9 Data bits, n Stop bit

M[1:0] = ‘10’: 1 start bit, 7 Data bits, n Stop bit

This bit can only be written when the USART is disabled (UE = 0).

Note: In 7-bits data length mode, the smartcard mode, LIN master mode and auto baud rate (0x7F and 0x55 frames detection) are not supported.

Bit 27 **EOBIE**: End of Bbock interrupt enable

This bit is set and cleared by software.

0: Interrupt inhibited

1: USART interrupt generated when the EOBF flag is set in the USART_ISR register

Note: If the USART does not support smartcard mode, this bit is reserved and must be kept at reset value. Refer to Section 28.4: USART implementation on page 838.

Bit 26 **RTOIE**: Receiver timeout interrupt enable

This bit is set and cleared by software.

0: Interrupt inhibited

1: USART interrupt generated when the RTOF bit is set in the USART_ISR register.

Note: If the USART does not support the Receiver timeout feature, this bit is reserved and must be kept at reset value. Section 28.4: USART implementation on page 838.

Bits 25:21 **DEAT[4:0]**: Driver enable assertion time

This 5-bit value defines the time between the activation of the DE (Driver Enable) signal and the beginning of the start bit. It is expressed in sample time units (1/8 or 1/16 bit time, depending on the oversampling rate).

This bitfield can only be written when the USART is disabled (UE = 0).

Note: If the Driver Enable feature is not supported, this bit is reserved and must be kept at reset value. Refer to Section 28.4: USART implementation on page 838.

Bits 20:16 **DEDT[4:0]**: Driver enable deassertion time

This 5-bit value defines the time between the end of the last stop bit, in a transmitted message, and the de-activation of the DE (Driver Enable) signal. It is expressed in sample time units (1/8 or 1/16 bit time, depending on the oversampling rate).

If the USART_TDR register is written during the DEDT time, the new data is transmitted only when the DEDT and DEAT times have both elapsed.

This bitfield can only be written when the USART is disabled (UE = 0).

Note: If the Driver Enable feature is not supported, this bit is reserved and must be kept at reset value. Refer to Section 28.4: USART implementation on page 838.

Bit 15 **OVER8**: Oversampling mode

0: Oversampling by 16

1: Oversampling by 8

This bit can only be written when the USART is disabled (UE = 0).

Note: In LIN, IrDA and smartcard modes, this bit must be kept cleared.

Bit 14 **CMIE**: Character match interrupt enable

This bit is set and cleared by software.

0: Interrupt inhibited

1: USART interrupt generated when the CMF bit is set in the USART_ISR register.

Bit 13 **MME**: Mute mode enable

This bit enables the USART mute mode function. When set, the USART can switch between active and mute mode, as defined by the WAKE bit. It is set and cleared by software.

0: Receiver in active mode permanently

1: Receiver can switch between mute mode and active mode.

Bit 12 **M0**: Word length

This bit is used in conjunction with bit 28 (M1) to determine the word length. It is set or cleared by software (refer to bit 28 (M1)description).

This bit can only be written when the USART is disabled (UE = 0).

Bit 11 **WAKE**: Receiver wake-up method

This bit determines the USART wake-up method from mute mode. It is set or cleared by software.

0: Idle line

1: Address mark

This bitfield can only be written when the USART is disabled (UE = 0).

Bit 10 **PCE**: Parity control enable

This bit selects the hardware parity control (generation and detection). When the parity control is enabled, the computed parity is inserted at the MSB position (9th bit if M = 1; 8th bit if M = 0) and the parity is checked on the received data. This bit is set and cleared by software. Once it is set, PCE is active after the current byte (in reception and in transmission).

0: Parity control disabled

1: Parity control enabled

This bitfield can only be written when the USART is disabled (UE = 0).

Bit 9 **PS**: Parity selection

This bit selects the odd or even parity when the parity generation/detection is enabled (PCE bit set). It is set and cleared by software. The parity is selected after the current byte.

0: Even parity

1: Odd parity

This bitfield can only be written when the USART is disabled (UE = 0).

Bit 8 **PEIE**: PE interrupt enable

This bit is set and cleared by software.
0: Interrupt inhibited
1: USART interrupt generated whenever PE = 1 in the USART_ISR register

Bit 7 **TXEIE**: Transmit data register empty

This bit is set and cleared by software.
0: Interrupt inhibited
1: USART interrupt generated whenever TXE =1 in the USART_ISR register

Bit 6 **TCIE**: Transmission complete interrupt enable

This bit is set and cleared by software.
0: Interrupt inhibited
1: USART interrupt generated whenever TC = 1 in the USART_ISR register

Bit 5 **RXNEIE**: Receive data register not empty

This bit is set and cleared by software.
0: Interrupt inhibited
1: USART interrupt generated whenever ORE = 1 or RXNE = 1 in the USART_ISR register

Bit 4 **IDLEIE**: IDLE interrupt enable

This bit is set and cleared by software.
0: Interrupt inhibited
1: USART interrupt generated whenever IDLE = 1 in the USART_ISR register

Bit 3 **TE**: Transmitter enable

This bit enables the transmitter. It is set and cleared by software.
0: Transmitter is disabled
1: Transmitter is enabled

Note: During transmission, a low pulse on the TE bit ('0' followed by '1') sends a preamble (idle line) after the current word, except in smartcard mode. In order to generate an idle character, the TE must not be immediately written to '1'. To ensure the required duration, the software can poll the TEACK bit in the USART_ISR register.

In smartcard mode, when TE is set, there is a 1 bit-time delay before the transmission starts.

Bit 2 **RE**: Receiver enable

This bit enables the receiver. It is set and cleared by software.
0: Receiver is disabled
1: Receiver is enabled and begins searching for a start bit

Bit 1 **UESM**: USART enable in low-power mode

When this bit is cleared, the USART cannot wake up the MCU from low-power mode.
When this bit is set, the USART can wake up the MCU from low-power mode.
This bit is set and cleared by software.
0: USART not able to wake up the MCU from low-power mode.
1: USART able to wake up the MCU from low-power mode.

Note: It is recommended to set the UESM bit just before entering low-power mode and clear it when exit from low-power mode.

If the USART does not support the wake-up from Stop feature, this bit is reserved and must be kept at reset value. Refer to Section 28.4: USART implementation on page 838.

Bit 0 **UE**: USART enable

When this bit is cleared, the USART prescalers and outputs are stopped immediately, and all current operations are discarded. The USART configuration is kept, but all the USART_ISR status flags are reset. This bit is set and cleared by software.

0: USART prescaler and outputs disabled, low-power mode

1: USART enabled

Note: To enter low-power mode without generating errors on the line, the TE bit must be previously reset and the software must wait for the TC bit in the USART_ISR to be set before resetting the UE bit.

The DMA requests are also reset when UE = 0 so the DMA channel must be disabled before resetting the UE bit.

In smartcard mode, (SCEN = 1), the CK pin is always available when CLKEN = 1, regardless of the UE bit value.

28.8.3 USART control register 2 (USART_CR2)

Address offset: 0x04

Reset value: 0x0000 0000

31	30	29	28	27	26	25	24	23	22	21	20	19	18	17	16
ADD[7:0]								RTOEN	ABRMOD[1:0]		ABREN	MSBFIRST	DATAINV	TXINV	RXINV
rw	rw	rw	rw	rw	rw	rw	rw	rw	rw	rw	rw	rw	rw	rw	rw
15	14	13	12	11	10	9	8	7	6	5	4	3	2	1	0
SWAP	LINEN	STOP[1:0]		CLKEN	CPOL	CPHA	LBCL	Res.	LBDIE	LBDL	ADDM7	DIS_NSS	Res.	Res.	SLVEN
rw	rw	rw	rw	rw	rw	rw	rw		rw	rw	rw	rw			rw

Bits 31:24 **ADD[7:0]**: Address of the USART node

These bits give the address of the USART node in mute mode or a character code to be recognized in low-power or Run mode:

- In mute mode: they are used in multiprocessor communication to wake up from mute mode with 4-bit/7-bit address mark detection. The MSB of the character sent by the transmitter should be equal to 1. In 4-bit address mark detection, only ADD[3:0] bits are used.
- In low-power mode: they are used for wake up from low-power mode on character match. When WUS[1:0] is programmed to 0b00 (WUF active on address match), the wake-up from low-power mode is performed when the received character corresponds to the character programmed through ADD[6:0] or ADD[3:0] bitfield (depending on ADDM7 bit), and WUF interrupt is enabled by setting WUFIE bit. The MSB of the character sent by transmitter should be equal to 1.
- In Run mode with mute mode inactive (for example, end-of-block detection in ModBus protocol): the whole received character (8 bits) is compared to ADD[7:0] value and CMF flag is set on match. An interrupt is generated if the CMIE bit is set.

These bits can only be written when the reception is disabled (RE = 0) or when the USART is disabled (UE = 0).

Bit 23 **RTOEN**: Receiver timeout enable

This bit is set and cleared by software.

0: Receiver timeout feature disabled.

1: Receiver timeout feature enabled.

When this feature is enabled, the RTOF flag in the USART_ISR register is set if the RX line is idle (no reception) for the duration programmed in the RTOR (receiver timeout register).

Note: If the USART does not support the Receiver timeout feature, this bit is reserved and must be kept at reset value. Refer to Section 28.4: USART implementation on page 838.

Bits 22:21 **ABRMOD[1:0]**: Auto baud rate mode

These bits are set and cleared by software.

00: Measurement of the start bit is used to detect the baud rate.

01: Falling edge to falling edge measurement (the received frame must start with a single bit = 1 and Frame = Start10xxxxxx)

10: 0x7F frame detection.

11: 0x55 frame detection

This bitfield can only be written when ABREN = 0 or the USART is disabled (UE = 0).

Note: If DATAINV = 1 and/or MSBFIRST = 1 the patterns must be the same on the line, for example 0xAA for MSBFIRST)

If the USART does not support the auto baud rate feature, this bit is reserved and must be kept at reset value. Refer to Section 28.4: USART implementation on page 838.

Bit 20 **ABREN**: Auto baud rate enable

This bit is set and cleared by software.

0: Auto baud rate detection is disabled.

1: Auto baud rate detection is enabled.

Note: If the USART does not support the auto baud rate feature, this bit is reserved and must be kept at reset value. Refer to Section 28.4: USART implementation on page 838.

Bit 19 **MSBFIRST**: Most significant bit first

This bit is set and cleared by software.

0: data is transmitted/received with data bit 0 first, following the start bit.

1: data is transmitted/received with the MSB (bit 7/8) first, following the start bit.

This bitfield can only be written when the USART is disabled (UE = 0).

Bit 18 **DATAINV:** Binary data inversion

This bit is set and cleared by software.

0: Logical data from the data register are send/received in positive/direct logic. (1 = H, 0 = L)

1: Logical data from the data register are send/received in negative/inverse logic. (1 = L, 0 = H). The parity bit is also inverted.

This bitfield can only be written when the USART is disabled (UE = 0).

Bit 17 **TXINV:** TX pin active level inversion

This bit is set and cleared by software.

0: TX pin signal works using the standard logic levels (V_{DD} =1/idle, Gnd = 0/mark)

1: TX pin signal values are inverted (V_{DD} =0/mark, Gnd = 1/idle).

This enables the use of an external inverter on the TX line.

This bitfield can only be written when the USART is disabled (UE = 0).

Bit 16 **RXINV:** RX pin active level inversion

This bit is set and cleared by software.

0: RX pin signal works using the standard logic levels (V_{DD} =1/idle, Gnd = 0/mark)

1: RX pin signal values are inverted (V_{DD} =0/mark, Gnd = 1/idle).

This enables the use of an external inverter on the RX line.

This bitfield can only be written when the USART is disabled (UE = 0).

Bit 15 **SWAP:** Swap TX/RX pins

This bit is set and cleared by software.

0: TX/RX pins are used as defined in standard pinout

1: The TX and RX pins functions are swapped. This enables to work in the case of a cross-wired connection to another UART.

This bitfield can only be written when the USART is disabled (UE = 0).

Bit 14 **LINEN**: LIN mode enable

This bit is set and cleared by software.

0: LIN mode disabled

1: LIN mode enabled

The LIN mode enables the capability to send LIN synchronous breaks (13 low bits) using the SBKRQ bit in the USART_CR1 register, and to detect LIN Sync breaks.

This bitfield can only be written when the USART is disabled (UE = 0).

Note: If the USART does not support LIN mode, this bit is reserved and must be kept at reset value. Refer to Section 28.4: USART implementation on page 838.

Bits 13:12 **STOP[1:0]**: Stop bits

These bits are used for programming the stop bits.

00: 1 stop bit

01: 0.5 stop bit.

10: 2 stop bits

11: 1.5 stop bits

This bitfield can only be written when the USART is disabled (UE = 0).

Bit 11 **CLKEN**: Clock enable

This bit enables the user to enable the CK pin.

0: CK pin disabled

1: CK pin enabled

This bit can only be written when the USART is disabled (UE = 0).

Note: If neither synchronous mode nor smartcard mode is supported, this bit is reserved and must be kept at reset value. Refer to Section 28.4: USART implementation on page 838.

In smartcard mode, in order to provide correctly the CK clock to the smartcard, the steps below must be respected:

UE = 0

SCEN = 1

GTPR configuration

CLKEN= 1

UE = 1

Bit 10 **CPOL**: Clock polarity

This bit enables the user to select the polarity of the clock output on the CK pin in synchronous mode. It works in conjunction with the CPHA bit to produce the desired clock/data relationship

0: Steady low value on CK pin outside transmission window

1: Steady high value on CK pin outside transmission window

This bit can only be written when the USART is disabled (UE = 0).

Note: If synchronous mode is not supported, this bit is reserved and must be kept at reset value. Refer to Section 28.4: USART implementation on page 838.

Bit 9 **CPHA**: Clock phase

This bit is used to select the phase of the clock output on the CK pin in synchronous mode. It works in conjunction with the CPOL bit to produce the desired clock/data relationship (see *Figure 252* and *Figure 253*)

0: The first clock transition is the first data capture edge

1: The second clock transition is the first data capture edge

This bit can only be written when the USART is disabled (UE = 0).

Note: If synchronous mode is not supported, this bit is reserved and must be kept at reset value. Refer to Section 28.4: USART implementation on page 838.

Bit 8 **LBCL**: Last bit clock pulse

This bit is used to select whether the clock pulse associated with the last data bit transmitted (MSB) has to be output on the CK pin in synchronous mode.

0: The clock pulse of the last data bit is not output to the CK pin

1: The clock pulse of the last data bit is output to the CK pin

Caution: The last bit is the 7th or 8th or 9th data bit transmitted depending on the 7 or 8 or 9 bit format selected by the M bit in the USART_CR1 register.

This bit can only be written when the USART is disabled (UE = 0).

Note: If synchronous mode is not supported, this bit is reserved and must be kept at reset value. Refer to Section 28.4: USART implementation on page 838.

Bit 7 Reserved, must be kept at reset value.

Bit 6 **LBDIE**: LIN break detection interrupt enable

Break interrupt mask (break detection using break delimiter).

0: Interrupt is inhibited

1: An interrupt is generated whenever LBDF = 1 in the USART_ISR register

Note: If LIN mode is not supported, this bit is reserved and must be kept at reset value. Refer to Section 28.4: USART implementation on page 838.

Bit 5 **LBDL**: LIN break detection length

This bit is for selection between 11 bit or 10 bit break detection.

0: 10-bit break detection

1: 11-bit break detection

This bit can only be written when the USART is disabled (UE = 0).

Note: If LIN mode is not supported, this bit is reserved and must be kept at reset value. Refer to Section 28.4: USART implementation on page 838.

Bit 4 **ADDM7**: 7-bit address detection/4-bit address detection

This bit is for selection between 4-bit address detection or 7-bit address detection.

0: 4-bit address detection

1: 7-bit address detection (in 8-bit data mode)

This bit can only be written when the USART is disabled (UE = 0)

Note: In 7-bit and 9-bit data modes, the address detection is done on 6-bit and 8-bit address (ADD[5:0] and ADD[7:0]) respectively.

Bit 3 **DIS_NSS**: NSS pin enable

When the DIS_NSS bit is set, the NSS pin input is ignored.

0: SPI slave selection depends on NSS input pin.

1: SPI slave is always selected and NSS input pin is ignored.

Note: When SPI slave mode is not supported, this bit is reserved and must be kept at reset value. Refer to Section 28.4: USART implementation on page 838.

Bits 2:1 Reserved, must be kept at reset value.

Bit 0 **SLVEN**: Synchronous slave mode enable

When the SLVEN bit is set, the synchronous slave mode is enabled.

0: Slave mode disabled.

1: Slave mode enabled.

Note: When SPI slave mode is not supported, this bit is reserved and must be kept at reset value. Refer to Section 28.4: USART implementation on page 838.

Note: The CPOL, CPHA and LBCL bits should not be written while the transmitter is enabled.

28.8.4 USART control register 3 (USART_CR3)

Address offset: 0x08

Reset value: 0x0000 0000

31	30	29	28	27	26	25	24	23	22	21	20	19	18	17	16
TXFTCFG[2:0]			RXF TIE	RXFTCFG[2:0]			TCBG TIE	TXFTIE	WUFIE	WUS[1:0]		SCARCNT[2:0]			Res.
rw	rw	rw	rw	rw	rw	rw	rw	rw	rw	rw	rw	rw	rw	rw	
15	14	13	12	11	10	9	8	7	6	5	4	3	2	1	0
DEP	DEM	DDRE	OVR DIS	ONE BIT	CTSIE	CTSE	RTSE	DMAT	DMAR	SCEN	NACK	HD SEL	IRLP	IREN	EIE
rw	rw	rw	rw	rw	rw	rw	rw	rw	rw	rw	rw	rw	rw	rw	rw

Bits 31:29 **TXFTCFG[2:0]:** TXFIFO threshold configuration

000:TXFIFO reaches 1/8 of its depth

001:TXFIFO reaches 1/4 of its depth

010:TXFIFO reaches 1/2 of its depth

011:TXFIFO reaches 3/4 of its depth

100:TXFIFO reaches 7/8 of its depth

101:TXFIFO becomes empty

Remaining combinations: Reserved

Bit 28 **RXFTIE**: RXFIFO threshold interrupt enable

This bit is set and cleared by software.

0: Interrupt inhibited

1: USART interrupt generated when Receive FIFO reaches the threshold programmed in RXFTCFG.

Bits 27:25 **RXFTCFG[2:0]:** Receive FIFO threshold configuration

000:Receive FIFO reaches 1/8 of its depth

001:Receive FIFO reaches 1/4 of its depth

010:Receive FIFO reaches 1/2 of its depth

011:Receive FIFO reaches 3/4 of its depth

100:Receive FIFO reaches 7/8 of its depth

101:Receive FIFO becomes full

Remaining combinations: Reserved

Bit 24 **TCBGTIE**: Transmission complete before guard time, interrupt enable

This bit is set and cleared by software.

0: Interrupt inhibited

1: USART interrupt generated whenever TCBGT=1 in the USART_ISR register

Note: If the USART does not support the smartcard mode, this bit is reserved and must be kept at reset value. Refer to Section 28.4: USART implementation on page 838.

Bit 23 **TXFTIE**: TXFIFO threshold interrupt enable

This bit is set and cleared by software.

0: Interrupt inhibited

1: USART interrupt generated when TXFIFO reaches the threshold programmed in TXFTCFG.

Bit 22 **WUFIE**: Wake-up from low-power mode interrupt enable

This bit is set and cleared by software.

0: Interrupt inhibited

1: USART interrupt generated whenever WUF = 1 in the USART_ISR register

Note: WUFIE must be set before entering in low-power mode.

If the USART does not support the wake-up from Stop feature, this bit is reserved and must be kept at reset value. Refer to Section 28.4: USART implementation on page 838.

Bits 21:20 **WUS[1:0]**: Wake-up from low-power mode interrupt flag selection

This bitfield specifies the event which activates the WUF (wake-up from low-power mode flag).

00: WUF active on address match (as defined by ADD[7:0] and ADDM7)

01: Reserved.

10: WUF active on start bit detection

11: WUF active on RXNE/RXFNE.

This bitfield can only be written when the USART is disabled (UE = 0).

Note: If the USART does not support the wake-up from Stop feature, this bit is reserved and must be kept at reset value. Refer to Section 28.4: USART implementation on page 838.

Bits 19:17 **SCARCNT[2:0]**: Smartcard auto-retry count

This bitfield specifies the number of retries for transmission and reception in smartcard mode.

In transmission mode, it specifies the number of automatic retransmission retries, before generating a transmission error (FE bit set).

In reception mode, it specifies the number or erroneous reception trials, before generating a reception error (RXNE/RXFNE and PE bits set).

This bitfield must be programmed only when the USART is disabled (UE = 0).

When the USART is enabled (UE = 1), this bitfield may only be written to 0x0, in order to stop retransmission.

0x0: retransmission disabled - No automatic retransmission in transmit mode.

0x1 to 0x7: number of automatic retransmission attempts (before signaling error)

Note: If smartcard mode is not supported, this bit is reserved and must be kept at reset value. Refer to Section 28.4: USART implementation on page 838.

Bit 16 Reserved, must be kept at reset value.

Bit 15 **DEP**: Driver enable polarity selection

0: DE signal is active high.

1: DE signal is active low.

This bit can only be written when the USART is disabled (UE = 0).

Note: If the Driver Enable feature is not supported, this bit is reserved and must be kept at reset value. Refer to Section 28.4: USART implementation on page 838.

Bit 14 **DEM**: Driver enable mode

This bit enables the user to activate the external transceiver control, through the DE signal.

0: DE function is disabled.

1: DE function is enabled. The DE signal is output on the RTS pin.

This bit can only be written when the USART is disabled (UE = 0).

Note: If the Driver Enable feature is not supported, this bit is reserved and must be kept at reset value. Section 28.4: USART implementation on page 838.

Bit 13 **DDRE**: DMA Disable on reception error

0: DMA is not disabled in case of reception error. The corresponding error flag is set but RXNE is kept 0 preventing from overrun. As a consequence, the DMA request is not asserted, so the erroneous data is not transferred (no DMA request), but next correct received data is transferred (used for smartcard mode).

1: DMA is disabled following a reception error. The corresponding error flag is set, as well as RXNE. The DMA request is masked until the error flag is cleared. This means that the software must first disable the DMA request (DMAR = 0) or clear RXNE/RXFNE is case FIFO mode is enabled) before clearing the error flag.

This bit can only be written when the USART is disabled (UE=0).

Note: The reception errors are: parity error, framing error or noise error.

Bit 12 **OVRDIS**: Overrun disable

This bit is used to disable the receive overrun detection.

0: Overrun Error Flag, ORE, is set when received data is not read before receiving new data.

1: Overrun functionality is disabled. If new data is received while the RXNE flag is still set the ORE flag is not set and the new received data overwrites the previous content of the USART_RDR register. When FIFO mode is enabled, the RXFIFO is bypassed and data is written directly in USART_RDR register. Even when FIFO management is enabled, the RXNE flag is to be used.

This bit can only be written when the USART is disabled (UE = 0).

Note: This control bit enables checking the communication flow w/o reading the data

Bit 11 **ONEBIT**: One sample bit method enable

This bit enables the user to select the sample method. When the one sample bit method is selected the noise detection flag (NE) is disabled.

0: Three sample bit method

1: One sample bit method

This bit can only be written when the USART is disabled (UE = 0).

Bit 10 **CTSIE**: CTS interrupt enable

0: Interrupt is inhibited

1: An interrupt is generated whenever CTSIF = 1 in the USART_ISR register

Note: If the hardware flow control feature is not supported, this bit is reserved and must be kept at reset value. Refer to Section 28.4: USART implementation on page 838.

Bit 9 **CTSE**: CTS enable

0: CTS hardware flow control disabled

1: CTS mode enabled, data is only transmitted when the CTS input is deasserted (tied to 0). If the CTS input is asserted while data is being transmitted, then the transmission is completed before stopping. If data is written into the data register while CTS is asserted, the transmission is postponed until CTS is deasserted.

This bit can only be written when the USART is disabled (UE = 0)

Note: If the hardware flow control feature is not supported, this bit is reserved and must be kept at reset value. Refer to Section 28.4: USART implementation on page 838.

Bit 8 **RTSE**: RTS enable

0: RTS hardware flow control disabled

1: RTS output enabled, data is only requested when there is space in the receive buffer. The transmission of data is expected to cease after the current character has been transmitted. The RTS output is deasserted (pulled to 0) when data can be received.

This bit can only be written when the USART is disabled (UE = 0).

Note: If the hardware flow control feature is not supported, this bit is reserved and must be kept at reset value. Refer to Section 28.4: USART implementation on page 838.

Bit 7 **DMAT**: DMA enable transmitter

This bit is set/reset by software

1: DMA mode is enabled for transmission

0: DMA mode is disabled for transmission

Bit 6 **DMAR**: DMA enable receiver

This bit is set/reset by software

1: DMA mode is enabled for reception

0: DMA mode is disabled for reception

Bit 5 **SCEN**: Smartcard mode enable

This bit is used for enabling smartcard mode.

0: Smartcard mode disabled

1: Smartcard mode enabled

This bitfield can only be written when the USART is disabled (UE = 0).

Note: If the USART does not support smartcard mode, this bit is reserved and must be kept at reset value. Refer to Section 28.4: USART implementation on page 838.

Bit 4 **NACK**: Smartcard NACK enable

0: NACK transmission in case of parity error is disabled

1: NACK transmission during parity error is enabled

This bitfield can only be written when the USART is disabled (UE = 0).

Note: If the USART does not support smartcard mode, this bit is reserved and must be kept at reset value. Refer to Section 28.4: USART implementation on page 838.

Bit 3 **HDSEL**: Half-duplex selection

Selection of single-wire half-duplex mode

0: Half duplex mode is not selected

1: Half duplex mode is selected

This bit can only be written when the USART is disabled (UE = 0).

Bit 2 **IRLP**: IrDA low-power

This bit is used for selecting between normal and low-power IrDA modes

0: Normal mode

1: Low-power mode

This bit can only be written when the USART is disabled (UE = 0).

Note: If IrDA mode is not supported, this bit is reserved and must be kept at reset value. Refer to Section 28.4: USART implementation on page 838.

Bit 1 **IREN**: IrDA mode enable

This bit is set and cleared by software.

0: IrDA disabled

1: IrDA enabled

This bit can only be written when the USART is disabled (UE = 0).

Note: If IrDA mode is not supported, this bit is reserved and must be kept at reset value. Refer to Section 28.4: USART implementation on page 838.

Bit 0 **EIE**: Error interrupt enable

Error Interrupt Enable Bit is required to enable interrupt generation in case of a framing error, overrun error noise flag or SPI slave underrun error (FE = 1 or ORE = 1 or NE = 1 or UDR = 1 in the USART_ISR register).

0: Interrupt inhibited

1: interrupt generated when FE = 1 or ORE = 1 or NE = 1 or UDR = 1 (in SPI slave mode) in the USART_ISR register.

28.8.5 USART baud rate register (USART_BRR)

This register can only be written when the USART is disabled (UE = 0). It may be automatically updated by hardware in auto baud rate detection mode.

Address offset: 0x0C

Reset value: 0x0000 0000

31	30	29	28	27	26	25	24	23	22	21	20	19	18	17	16
Res.	Res.	Res.	Res.	Res.	Res.	Res.	Res.	Res.	Res.	Res.	Res.	Res.	Res.	Res.	Res.

15	14	13	12	11	10	9	8	7	6	5	4	3	2	1	0
BRR[15:0]															
rw	rw	rw	rw	rw	rw	rw	rw	rw	rw	rw	rw	rw	rw	rw	rw

Bits 31:16 Reserved, must be kept at reset value.

Bits 15:0 **BRR[15:0]**: USART baud rate

BRR[15:4]

BRR[15:4] = USARTDIV[15:4]

BRR[3:0]

When OVER8 = 0, BRR[3:0] = USARTDIV[3:0].

When OVER8 = 1:

BRR[2:0] = USARTDIV[3:0] shifted 1 bit to the right.

BRR[3] must be kept cleared.

28.8.6 USART guard time and prescaler register (USART_GTPR)

Address offset: 0x10

Reset value: 0x0000 0000

31	30	29	28	27	26	25	24	23	22	21	20	19	18	17	16
Res.	Res.	Res.	Res.	Res.	Res.	Res.	Res.	Res.	Res.	Res.	Res.	Res.	Res.	Res.	Res.

15	14	13	12	11	10	9	8	7	6	5	4	3	2	1	0
GT[7:0]								PSC[7:0]							
rw	rw	rw	rw	rw	rw	rw	rw	rw	rw	rw	rw	rw	rw	rw	rw

Bits 31:16 Reserved, must be kept at reset value.

Bits 15:8 **GT[7:0]**: Guard time value

This bitfield is used to program the Guard time value in terms of number of baud clock periods.

This is used in smartcard mode. The Transmission Complete flag is set after this guard time value.

This bitfield can only be written when the USART is disabled (UE = 0).

Note: If smartcard mode is not supported, this bit is reserved and must be kept at reset value. Refer to Section 28.4: USART implementation on page 838.

Bits 7:0 **PSC[7:0]**: Prescaler value

In IrDA low-power and normal IrDA mode:

PSC[7:0] = IrDA normal and low-power baud rate

PSC[7:0] is used to program the prescaler for dividing the USART source clock to achieve the low-power frequency: the source clock is divided by the value given in the register (8 significant bits):

In smartcard mode:

PSC[4:0] = Prescaler value

PSC[4:0] is used to program the prescaler for dividing the USART source clock to provide the smartcard clock. The value given in the register (5 significant bits) is multiplied by 2 to give the division factor of the source clock frequency:

00000: Reserved - do not program this value
00001: Divides the source clock by 1 (IrDA mode) / by 2 (smartcard mode)
00010: Divides the source clock by 2 (IrDA mode) / by 4 (smartcard mode)
00011: Divides the source clock by 3 (IrDA mode) / by 6 (smartcard mode)
...
11111: Divides the source clock by 31 (IrDA mode) / by 62 (smartcard mode)
0010 0000: Divides the source clock by 32 (IrDA mode)
...
1111 1111: Divides the source clock by 255 (IrDA mode)

This bitfield can only be written when the USART is disabled (UE = 0).

Note: Bits [7:5] must be kept cleared if smartcard mode is used.

This bitfield is reserved and forced by hardware to '0' when the smartcard and IrDA modes are not supported. Refer to Section 28.4: USART implementation on page 838.

28.8.7 USART receiver timeout register (USART_RTOR)

Address offset: 0x14

Reset value: 0x0000 0000

31	30	29	28	27	26	25	24	23	22	21	20	19	18	17	16
BLEN[7:0]								RTO[23:16]							
rw	rw	rw	rw	rw	rw	rw	rw	rw	rw	rw	rw	rw	rw	rw	rw
15	14	13	12	11	10	9	8	7	6	5	4	3	2	1	0
RTO[15:0]															
rw	rw	rw	rw	rw	rw	rw	rw	rw	rw	rw	rw	rw	rw	rw	rw

Bits 31:24 **BLEN[7:0]**: Block length

This bitfield gives the Block length in smartcard T = 1 Reception. Its value equals the number of information characters + the length of the Epilogue Field (1-LEC/2-CRC) - 1.

Examples:

BLEN = 0: 0 information characters + LEC

BLEN = 1: 0 information characters + CRC

BLEN = 255: 254 information characters + CRC (total 256 characters))

In smartcard mode, the Block length counter is reset when TXE = 0 (TXFE = 0 in case FIFO mode is enabled).

This bitfield can be used also in other modes. In this case, the Block length counter is reset when RE = 0 (receiver disabled) and/or when the EOBCF bit is written to 1.

Note: This value can be programmed after the start of the block reception (using the data from the LEN character in the Prologue Field). It must be programmed only once per received block.

Bits 23:0 **RTO[23:0]**: Receiver timeout value

This bitfield gives the Receiver timeout value in terms of number of bits during which there is no activity on the RX line.

In standard mode, the RTOF flag is set if, after the last received character, no new start bit is detected for more than the RTO value.

In smartcard mode, this value is used to implement the CWT and BWT. See smartcard chapter for more details. In the standard, the CWT/BWT measurement is done starting from the start bit of the last received character.

Note: This value must only be programmed once per received character.

Note: RTOR can be written on-the-fly. If the new value is lower than or equal to the counter, the RTOF flag is set.

This register is reserved and forced by hardware to "0x00000000" when the Receiver timeout feature is not supported. Refer to *Section 28.4: USART implementation on page 838.*

28.8.8 USART request register (USART_RQR)

Address offset: 0x18

Reset value: 0x0000 0000

31	30	29	28	27	26	25	24	23	22	21	20	19	18	17	16
Res.	Res.	Res.	Res.	Res.	Res.	Res.	Res.	Res.	Res.	Res.	Res.	Res.	Res.	Res.	Res.

15	14	13	12	11	10	9	8	7	6	5	4	3	2	1	0
Res.	Res.	Res.	Res.	Res.	Res.	Res.	Res.	Res.	Res.	Res.	TXFRQ	RXFRQ	MMRQ	SBKRQ	ABRRQ
											w	w	w	w	w

Bits 31:5 Reserved, must be kept at reset value.

Bit 4 **TXFRQ**: Transmit data flush request

When FIFO mode is disabled, writing '1' to this bit sets the TXE flag. This enables to discard the transmit data. This bit must be used only in smartcard mode, when data have not been sent due to errors (NACK) and the FE flag is active in the USART_ISR register. If the USART does not support smartcard mode, this bit is reserved and must be kept at reset value.

When FIFO is enabled, TXFRQ bit is set to flush the whole FIFO. This sets the TXFE flag (Transmit FIFO empty, bit 23 in the USART_ISR register). Flushing the Transmit FIFO is supported in both UART and smartcard modes.

Note: In FIFO mode, the TXFNF flag is reset during the flush request until TxFIFO is empty in order to ensure that no data are written in the data register.

Bit 3 **RXFRQ**: Receive data flush request

Writing 1 to this bit empties the entire receive FIFO i.e. clears the bit RXFNE.

This enables to discard the received data without reading them, and avoid an overrun condition.

Bit 2 **MMRQ**: Mute mode request

Writing 1 to this bit puts the USART in mute mode and resets the RWU flag.

Bit 1 **SBKRQ**: Send break request

Writing 1 to this bit sets the SBKF flag and request to send a BREAK on the line, as soon as the transmit machine is available.

Note: When the application needs to send the break character following all previously inserted data, including the ones not yet transmitted, the software should wait for the TXE flag assertion before setting the SBKRQ bit.

Bit 0 **ABRRQ**: Auto baud rate request

Writing 1 to this bit resets the ABRF and ABRE flags in the USART_ISR and requests an automatic baud rate measurement on the next received data frame.

Note: If the USART does not support the auto baud rate feature, this bit is reserved and must be kept at reset value. Refer to Section 28.4: USART implementation on page 838.

28.8.9 USART interrupt and status register (USART_ISR)

Address offset: 0x1C

Reset value: 0x0X80 00C0

X = 2 if FIFO/smartcard mode is enabled

X = 0 if FIFO is enabled and smartcard mode is disabled

The same register can be used in FIFO mode enabled (this section) and FIFO mode disabled (next section).

FIFO mode enabled

31	30	29	28	27	26	25	24	23	22	21	20	19	18	17	16
Res.	Res.	Res.	Res.	TXFT	RXFT	TCBGT	RXFF	TXFE	RE ACK	TE ACK	WUF	RWU	SBKF	CMF	BUSY
				r	r	r	r	r	r	r	r	r	r	r	r
15	14	13	12	11	10	9	8	7	6	5	4	3	2	1	0
ABRF	ABRE	UDR	EOBF	RTOF	CTS	CTSIF	LBDF	TXFNF	TC	RXFNE	IDLE	ORE	NE	FE	PE
r	r	r	r	r	r	r	r	r	r	r	r	r	r	r	r

Bits 31:28 Reserved, must be kept at reset value.

Bit 27 **TXFT**: TXFIFO threshold flag

This bit is set by hardware when the TXFIFO reaches the threshold programmed in TXFTCFG of USART_CR3 register i.e. the TXFIFO contains TXFTCFG empty locations. An interrupt is generated if the TXFTIE bit = 1 (bit 31) in the USART_CR3 register.

0: TXFIFO does not reach the programmed threshold.

1: TXFIFO reached the programmed threshold.

Bit 26 **RXFT**: RXFIFO threshold flag

This bit is set by hardware when the threshold programmed in RXFTCFG in USART_CR3 register is reached. This means that there are (RXFTCFG - 1) data in the Receive FIFO and one data in the USART_RDR register. An interrupt is generated if the RXFTIE bit = 1 (bit 27) in the USART_CR3 register.

0: Receive FIFO does not reach the programmed threshold.

1: Receive FIFO reached the programmed threshold.

Note: When the RXFTCFG threshold is configured to '101', RXFT flag is set if 16 data are available i.e. 15 data in the RXFIFO and 1 data in the USART_RDR. Consequently, the 17th received data does not cause an overrun error. The overrun error occurs after receiving the 18th data.

Bit 25 **TCBGT:** Transmission complete before guard time flag

This bit is set when the last data written in the USART_TDR has been transmitted correctly out of the shift register.

It is set by hardware in smartcard mode, if the transmission of a frame containing data is complete and if the smartcard did not send back any NACK. An interrupt is generated if TCBGTIE = 1 in the USART_CR3 register.

This bit is cleared by software, by writing 1 to the TCBGTCF in the USART_ICR register or by a write to the USART_TDR register.

0: Transmission is not complete or transmission is complete unsuccessfully (i.e. a NACK is received from the card)

1: Transmission is complete successfully (before Guard time completion and there is no NACK from the smart card).

Note: If the USART does not support the smartcard mode, this bit is reserved and kept at reset value. If the USART supports the smartcard mode and the smartcard mode is enabled, the TCBGT reset value is '1'. Refer to Section 28.4: USART implementation on page 838.

Bit 24 **RXFF**: RXFIFO full

This bit is set by hardware when the number of received data corresponds to RXFIFO size + 1 (RXFIFO full + 1 data in the USART_RDR register.

An interrupt is generated if the RXFFIE bit = 1 in the USART_CR1 register.

0: RXFIFO not full.

1: RXFIFO Full.

Bit 23 **TXFE**: TXFIFO empty

This bit is set by hardware when TXFIFO is empty. When the TXFIFO contains at least one data, this flag is cleared. The TXFE flag can also be set by writing 1 to the bit TXFRQ (bit 4) in the USART_RQR register.

An interrupt is generated if the TXFEIE bit = 1 (bit 30) in the USART_CR1 register.

0: TXFIFO not empty.

1: TXFIFO empty.

Bit 22 **REACK**: Receive enable acknowledge flag

This bit is set/reset by hardware, when the Receive Enable value is taken into account by the USART.

It can be used to verify that the USART is ready for reception before entering low-power mode.

Note: If the USART does not support the wake-up from Stop feature, this bit is reserved and kept at reset value. Refer to Section 28.4: USART implementation on page 838.

Bit 21 **TEACK**: Transmit enable acknowledge flag

This bit is set/reset by hardware, when the Transmit Enable value is taken into account by the USART.

It can be used when an idle frame request is generated by writing TE = 0, followed by TE = 1 in the USART_CR1 register, in order to respect the TE = 0 minimum period.

Bit 20 **WUF**: Wake-up from low-power mode flag

This bit is set by hardware, when a wake-up event is detected. The event is defined by the WUS bitfield. It is cleared by software, writing a 1 to the WUCF in the USART_ICR register.

An interrupt is generated if WUFIE = 1 in the USART_CR3 register.

Note: When UESM is cleared, WUF flag is also cleared.

If the USART does not support the wake-up from Stop feature, this bit is reserved and kept at reset value. Refer to Section 28.4: USART implementation on page 838.

Bit 19 **RWU**: Receiver wake-up from mute mode

This bit indicates if the USART is in mute mode. It is cleared/set by hardware when a wake-up/mute sequence is recognized. The mute mode control sequence (address or IDLE) is selected by the WAKE bit in the USART_CR1 register.

When wake-up on IDLE mode is selected, this bit can only be set by software, writing 1 to the MMRQ bit in the USART_RQR register.

0: Receiver in active mode

1: Receiver in mute mode

Note: If the USART does not support the wake-up from Stop feature, this bit is reserved and kept at reset value. Refer to Section 28.4: USART implementation on page 838.

Bit 18 **SBKF**: Send break flag

This bit indicates that a send break character was requested. It is set by software, by writing 1 to the SBKRQ bit in the USART_CR3 register. It is automatically reset by hardware during the stop bit of break transmission.

0: Break character transmitted

1: Break character requested by setting SBKRQ bit in USART_RQR register

Bit 17 **CMF**: Character match flag

This bit is set by hardware, when a the character defined by ADD[7:0] is received. It is cleared by software, writing 1 to the CMCF in the USART_ICR register.

An interrupt is generated if CMIE = 1in the USART_CR1 register.

0: No Character match detected

1: Character Match detected

Bit 16 **BUSY**: Busy flag

This bit is set and reset by hardware. It is active when a communication is ongoing on the RX line (successful start bit detected). It is reset at the end of the reception (successful or not).

0: USART is idle (no reception)

1: Reception on going

Bit 15 **ABRF:** Auto baud rate flag

This bit is set by hardware when the automatic baud rate has been set (RXFNE is also set, generating an interrupt if RXFNEIE = 1) or when the auto baud rate operation was completed without success (ABRE = 1) (ABRE, RXFNE and FE are also set in this case)

It is cleared by software, in order to request a new auto baud rate detection, by writing 1 to the ABRRQ in the USART_RQR register.

Note: If the USART does not support the auto baud rate feature, this bit is reserved and kept at reset value.

Bit 14 **ABRE**: Auto baud rate error

This bit is set by hardware if the baud rate measurement failed (baud rate out of range or character comparison failed)

It is cleared by software, by writing 1 to the ABRRQ bit in the USART_RQR register.

Note: If the USART does not support the auto baud rate feature, this bit is reserved and kept at reset value.

Bit 13 **UDR**: SPI slave underrun error flag

In slave transmission mode, this flag is set when the first clock pulse for data transmission appears while the software has not yet loaded any value into USART_TDR. This flag is reset by setting UDRCF bit in the USART_ICR register.

0: No underrun error

1: underrun error

Note: If the USART does not support the SPI slave mode, this bit is reserved and kept at reset value. Refer to Section 28.4: USART implementation on page 838.

Bit 12 **EOBF**: End of block flag

This bit is set by hardware when a complete block has been received (for example T = 1 smartcard mode). The detection is done when the number of received bytes (from the start of the block, including the prologue) is equal or greater than BLEN + 4.

An interrupt is generated if the EOBIE = 1 in the USART_CR1 register.

It is cleared by software, writing 1 to the EOBCF in the USART_ICR register.

0: End of Block not reached

1: End of Block (number of characters) reached

Note: If smartcard mode is not supported, this bit is reserved and kept at reset value. Refer to Section 28.4: USART implementation on page 838.

Bit 11 **RTOF**: Receiver timeout

This bit is set by hardware when the timeout value, programmed in the RTOR register has lapsed, without any communication. It is cleared by software, writing 1 to the RTOCF bit in the USART_ICR register.

An interrupt is generated if RTOIE = 1 in the USART_CR2 register.

In smartcard mode, the timeout corresponds to the CWT or BWT timings.

0: Timeout value not reached

1: Timeout value reached without any data reception

Note: If a time equal to the value programmed in RTOR register separates 2 characters, RTOF is not set. If this time exceeds this value + 2 sample times (2/16 or 2/8, depending on the oversampling method), RTOF flag is set.

The counter counts even if RE = 0 but RTOF is set only when RE = 1. If the timeout has already elapsed when RE is set, then RTOF is set.

If the USART does not support the Receiver timeout feature, this bit is reserved and kept at reset value.

Bit 10 **CTS**: CTS flag

This bit is set/reset by hardware. It is an inverted copy of the status of the CTS input pin.

0: CTS line set

1: CTS line reset

Note: If the hardware flow control feature is not supported, this bit is reserved and kept at reset value.

Bit 9 **CTSIF**: CTS interrupt flag

This bit is set by hardware when the CTS input toggles, if the CTSE bit is set. It is cleared by software, by writing 1 to the CTSCF bit in the USART_ICR register.

An interrupt is generated if CTSIE = 1 in the USART_CR3 register.

0: No change occurred on the CTS status line

1: A change occurred on the CTS status line

Note: If the hardware flow control feature is not supported, this bit is reserved and kept at reset value.

Bit 8 **LBDF**: LIN break detection flag

This bit is set by hardware when the LIN break is detected. It is cleared by software, by writing 1 to the LBDCF in the USART_ICR.

An interrupt is generated if LBDIE = 1 in the USART_CR2 register.

0: LIN Break not detected

1: LIN break detected

Note: If the USART does not support LIN mode, this bit is reserved and kept at reset value. Refer to Section 28.4: USART implementation on page 838.

Bit 7 **TXFNF:** TXFIFO not full

TXFNF is set by hardware when TXFIFO is not full meaning that data can be written in the USART_TDR. Every write operation to the USART_TDR places the data in the TXFIFO. This flag remains set until the TXFIFO is full. When the TXFIFO is full, this flag is cleared indicating that data can not be written into the USART_TDR.

An interrupt is generated if the TXFNFIE bit =1 in the USART_CR1 register.

0: Transmit FIFO is full

1: Transmit FIFO is not full

Note: The TXFNF is kept reset during the flush request until TXFIFO is empty. After sending the flush request (by setting TXFRQ bit), the flag TXFNF should be checked prior to writing in TXFIFO (TXFNF and TXFE are set at the same time).

This bit is used during single buffer transmission.

Bit 6 **TC**: Transmission complete

This bit indicates that the last data written in the USART_TDR has been transmitted out of the shift register.

It is set by hardware when the transmission of a frame containing data is complete and when TXFE is set.

An interrupt is generated if TCIE = 1 in the USART_CR1 register.

TC bit is is cleared by software, by writing 1 to the TCCF in the USART_ICR register or by a write to the USART_TDR register.

0: Transmission is not complete

1: Transmission is complete

Note: If TE bit is reset and no transmission is on going, the TC bit is immediately set.

Bit 5 **RXFNE**: RXFIFO not empty

RXFNE bit is set by hardware when the RXFIFO is not empty, meaning that data can be read from the USART_RDR register. Every read operation from the USART_RDR frees a location in the RXFIFO.

RXFNE is cleared when the RXFIFO is empty. The RXFNE flag can also be cleared by writing 1 to the RXFRQ in the USART_RQR register.

An interrupt is generated if RXFNEIE = 1 in the USART_CR1 register.

0: Data is not received

1: Received data is ready to be read.

Bit 4 **IDLE**: Idle line detected

This bit is set by hardware when an Idle Line is detected. An interrupt is generated if IDLEIE = 1 in the USART_CR1 register. It is cleared by software, writing 1 to the IDLECF in the USART_ICR register.

0: No Idle line is detected

1: Idle line is detected

Note: The IDLE bit is not set again until the RXFNE bit has been set (i.e. a new idle line occurs).

If mute mode is enabled (MME = 1), IDLE is set if the USART is not mute (RWU = 0), whatever the mute mode selected by the WAKE bit. If RWU = 1, IDLE is not set.

Bit 3 **ORE**: Overrun error

This bit is set by hardware when the data currently being received in the shift register is ready to be transferred into the USART_RDR register while RXFF = 1. It is cleared by a software, writing 1 to the ORECF, in the USART_ICR register.

An interrupt is generated if RXFNEIE = 1 in the USART_CR1 register, or EIE = 1 in the USART_CR3 register.

0: No overrun error

1: Overrun error is detected

Note: When this bit is set, the USART_RDR register content is not lost but the shift register is overwritten. An interrupt is generated if the ORE flag is set during multi buffer communication if the EIE bit is set.

This bit is permanently forced to 0 (no overrun detection) when the bit OVRDIS is set in the USART_CR3 register.

Bit 2 **NE**: Noise detection flag

This bit is set by hardware when noise is detected on a received frame. It is cleared by software, writing 1 to the NECF bit in the USART_ICR register.

0: No noise is detected

1: Noise is detected

Note: This bit does not generate an interrupt as it appears at the same time as the RXFNE bit which itself generates an interrupt. An interrupt is generated when the NE flag is set during multi buffer communication if the EIE bit is set.

When the line is noise-free, the NE flag can be disabled by programming the ONEBIT bit to 1 to increase the USART tolerance to deviations (Refer to Section 28.5.8: Tolerance of the USART receiver to clock deviation on page 855).

This error is associated with the character in the USART_RDR.

Bit 1 **FE**: Framing error

This bit is set by hardware when a de-synchronization, excessive noise or a break character is detected. It is cleared by software, writing 1 to the FECF bit in the USART_ICR register.
When transmitting data in smartcard mode, this bit is set when the maximum number of transmit attempts is reached without success (the card NACKs the data frame).
An interrupt is generated if EIE = 1 in the USART_CR3 register.
0: No Framing error is detected
1: Framing error or break character is detected

Note: This error is associated with the character in the USART_RDR.

Bit 0 **PE**: Parity error

This bit is set by hardware when a parity error occurs in receiver mode. It is cleared by software, writing 1 to the PECF in the USART_ICR register.
An interrupt is generated if PEIE = 1 in the USART_CR1 register.
0: No parity error
1: Parity error

Note: This error is associated with the character in the USART_RDR.

28.8.10 USART interrupt and status register [alternate] (USART_ISR)

Address offset: 0x1C

Reset value: 0x0000 00C0

The same register can be used in FIFO mode enabled (previous section) and FIFO mode disabled (this section).

FIFO mode disabled

31	30	29	28	27	26	25	24	23	22	21	20	19	18	17	16
Res.	Res.	Res.	Res.	Res.	Res.	TCBGT	Res.	Res.	RE ACK	TE ACK	WUF	RWU	SBKF	CMF	BUSY
						r			r	r	r	r	r	r	r

15	14	13	12	11	10	9	8	7	6	5	4	3	2	1	0
ABRF	ABRE	UDR	EOBF	RTOF	CTS	CTSIF	LBDF	TXE	TC	RXNE	IDLE	ORE	NE	FE	PE
r	r	r	r	r	r	r	r	r	r	r	r	r	r	r	r

Bits 31:26 Reserved, must be kept at reset value.

Bit 25 **TCBGT:** Transmission complete before guard time flag

This bit is set when the last data written in the USART_TDR has been transmitted correctly out of the shift register.

It is set by hardware in smartcard mode, if the transmission of a frame containing data is complete and if the smartcard did not send back any NACK. An interrupt is generated if TCBGTIE = 1 in the USART_CR3 register.

This bit is cleared by software, by writing 1 to the TCBGTCF in the USART_ICR register or by a write to the USART_TDR register.

0: Transmission is not complete or transmission is complete unsuccessfully (i.e. a NACK is received from the card)

1: Transmission is complete successfully (before Guard time completion and there is no NACK from the smart card).

Note: If the USART does not support the smartcard mode, this bit is reserved and kept at reset value. If the USART supports the smartcard mode and the smartcard mode is enabled, the TCBGT reset value is '1'. Refer to Section 28.4: USART implementation on page 838.

Bits 24:23 Reserved, must be kept at reset value.

Bit 22 **REACK**: Receive enable acknowledge flag

This bit is set/reset by hardware, when the Receive Enable value is taken into account by the USART.

It can be used to verify that the USART is ready for reception before entering low-power mode.

Note: If the USART does not support the wake-up from Stop feature, this bit is reserved and kept at reset value. Refer to Section 28.4: USART implementation on page 838.

Bit 21 **TEACK**: Transmit enable acknowledge flag

This bit is set/reset by hardware, when the Transmit Enable value is taken into account by the USART.

It can be used when an idle frame request is generated by writing TE = 0, followed by TE = 1 in the USART_CR1 register, in order to respect the TE = 0 minimum period.

Bit 20 **WUF**: Wake-up from low-power mode flag

This bit is set by hardware, when a wake-up event is detected. The event is defined by the WUS bitfield. It is cleared by software, writing a 1 to the WUCF in the USART_ICR register.

An interrupt is generated if WUFIE = 1 in the USART_CR3 register.

Note: When UESM is cleared, WUF flag is also cleared.

If the USART does not support the wake-up from Stop feature, this bit is reserved and kept at reset value. Refer to Section 28.4: USART implementation on page 838.

Bit 19 **RWU**: *Receiver wake-up from mute mode*

This bit indicates if the USART is in mute mode. It is cleared/set by hardware when a wake-up/mute sequence is recognized. The mute mode control sequence (address or IDLE) is selected by the WAKE bit in the USART_CR1 register.

When wake-up on IDLE mode is selected, this bit can only be set by software, writing 1 to the MMRQ bit in the USART_RQR register.

0: Receiver in active mode

1: Receiver in mute mode

Note: If the USART does not support the wake-up from Stop feature, this bit is reserved and kept at reset value. Refer to Section 28.4: USART implementation on page 838.

Bit 18 **SBKF**: Send break flag

This bit indicates that a send break character was requested. It is set by software, by writing 1 to the SBKRQ bit in the USART_CR3 register. It is automatically reset by hardware during the stop bit of break transmission.

0: Break character transmitted

1: Break character requested by setting SBKRQ bit in USART_RQR register

Bit 17 **CMF**: Character match flag

This bit is set by hardware, when a the character defined by ADD[7:0] is received. It is cleared by software, writing 1 to the CMCF in the USART_ICR register.

An interrupt is generated if CMIE = 1in the USART_CR1 register.

0: No Character match detected

1: Character Match detected

Bit 16 **BUSY**: Busy flag

This bit is set and reset by hardware. It is active when a communication is ongoing on the RX line (successful start bit detected). It is reset at the end of the reception (successful or not).

0: USART is idle (no reception)

1: Reception on going

Bit 15 **ABRF:** Auto baud rate flag

This bit is set by hardware when the automatic baud rate has been set (RXNE is also set, generating an interrupt if RXNEIE = 1) or when the auto baud rate operation was completed without success (ABRE = 1) (ABRE, RXNE and FE are also set in this case)

It is cleared by software, in order to request a new auto baud rate detection, by writing 1 to the ABRRQ in the USART_RQR register.

Note: If the USART does not support the auto baud rate feature, this bit is reserved and kept at reset value.

Bit 14 **ABRE**: Auto baud rate error

This bit is set by hardware if the baud rate measurement failed (baud rate out of range or character comparison failed)

It is cleared by software, by writing 1 to the ABRRQ bit in the USART_RQR register.

Note: If the USART does not support the auto baud rate feature, this bit is reserved and kept at reset value.

Bit 13 **UDR**: SPI slave underrun error flag

In slave transmission mode, this flag is set when the first clock pulse for data transmission appears while the software has not yet loaded any value into USART_TDR. This flag is reset by setting UDRCF bit in the USART_ICR register.

0: No underrun error

1: underrun error

Note: If the USART does not support the SPI slave mode, this bit is reserved and kept at reset value. Refer to Section 28.4: USART implementation on page 838.

Bit 12 **EOBF**: End of block flag

This bit is set by hardware when a complete block has been received (for example T = 1 smartcard mode). The detection is done when the number of received bytes (from the start of the block, including the prologue) is equal or greater than BLEN + 4.

An interrupt is generated if the EOBIE = 1 in the USART_CR1 register.

It is cleared by software, writing 1 to the EOBCF in the USART_ICR register.

0: End of Block not reached

1: End of Block (number of characters) reached

Note: If smartcard mode is not supported, this bit is reserved and kept at reset value. Refer to Section 28.4: USART implementation on page 838.

Bit 11 **RTOF**: Receiver timeout

This bit is set by hardware when the timeout value, programmed in the RTOR register has lapsed, without any communication. It is cleared by software, writing 1 to the RTOCF bit in the USART_ICR register.

An interrupt is generated if RTOIE = 1 in the USART_CR2 register.

In smartcard mode, the timeout corresponds to the CWT or BWT timings.

0: Timeout value not reached

1: Timeout value reached without any data reception

Note: If a time equal to the value programmed in RTOR register separates 2 characters, RTOF is not set. If this time exceeds this value + 2 sample times (2/16 or 2/8, depending on the oversampling method), RTOF flag is set.

The counter counts even if RE = 0 but RTOF is set only when RE = 1. If the timeout has already elapsed when RE is set, then RTOF is set.

If the USART does not support the Receiver timeout feature, this bit is reserved and kept at reset value.

Bit 10 **CTS**: CTS flag

This bit is set/reset by hardware. It is an inverted copy of the status of the CTS input pin.

0: CTS line set

1: CTS line reset

Note: If the hardware flow control feature is not supported, this bit is reserved and kept at reset value.

Bit 9 **CTSIF**: CTS interrupt flag

This bit is set by hardware when the CTS input toggles, if the CTSE bit is set. It is cleared by software, by writing 1 to the CTSCF bit in the USART_ICR register.

An interrupt is generated if CTSIE = 1 in the USART_CR3 register.

0: No change occurred on the CTS status line

1: A change occurred on the CTS status line

Note: If the hardware flow control feature is not supported, this bit is reserved and kept at reset value.

Bit 8 **LBDF**: LIN break detection flag

This bit is set by hardware when the LIN break is detected. It is cleared by software, by writing 1 to the LBDCF in the USART_ICR.

An interrupt is generated if LBDIE = 1 in the USART_CR2 register.

0: LIN Break not detected

1: LIN break detected

Note: If the USART does not support LIN mode, this bit is reserved and kept at reset value. Refer to Section 28.4: USART implementation on page 838.

Bit 7 **TXE:** Transmit data register empty

TXE is set by hardware when the content of the USART_TDR register has been transferred into the shift register. It is cleared by writing to the USART_TDR register. The TXE flag can also be set by writing 1 to the TXFRQ in the USART_RQR register, in order to discard the data (only in smartcard T = 0 mode, in case of transmission failure).

An interrupt is generated if the TXEIE bit = 1 in the USART_CR1 register.

0: Data register full

1: Data register not full

Bit 6 **TC**: Transmission complete

This bit indicates that the last data written in the USART_TDR has been transmitted out of the shift register.

It is set by hardware when the transmission of a frame containing data is complete and when TXE is set.

An interrupt is generated if TCIE = 1 in the USART_CR1 register.

TC bit is is cleared by software, by writing 1 to the TCCF in the USART_ICR register or by a write to the USART_TDR register.

0: Transmission is not complete

1: Transmission is complete

Note: If TE bit is reset and no transmission is on going, the TC bit is set immediately.

Bit 5 **RXNE**: Read data register not empty

RXNE bit is set by hardware when the content of the USART_RDR shift register has been transferred to the USART_RDR register. It is cleared by reading from the USART_RDR register. The RXNE flag can also be cleared by writing 1 to the RXFRQ in the USART_RQR register.

An interrupt is generated if RXNEIE = 1 in the USART_CR1 register.

0: Data is not received

1: Received data is ready to be read.

Bit 4 **IDLE**: Idle line detected

This bit is set by hardware when an Idle Line is detected. An interrupt is generated if IDLEIE = 1 in the USART_CR1 register. It is cleared by software, writing 1 to the IDLECF in the USART_ICR register.

0: No Idle line is detected

1: Idle line is detected

Note: The IDLE bit is not set again until the RXNE bit has been set (i.e. a new idle line occurs).

If mute mode is enabled (MME = 1), IDLE is set if the USART is not mute (RWU = 0), whatever the mute mode selected by the WAKE bit. If RWU = 1, IDLE is not set.

Bit 3 **ORE**: Overrun error

This bit is set by hardware when the data currently being received in the shift register is ready to be transferred into the USART_RDR register while RXNE = 1. It is cleared by a software, writing 1 to the ORECF, in the USART_ICR register.

An interrupt is generated if RXNEIE = 1 or EIE = 1 in the LPUART_CR1 register, or EIE = 1 in the USART_CR3 register.

0: No overrun error

1: Overrun error is detected

Note: When this bit is set, the USART_RDR register content is not lost but the shift register is overwritten. An interrupt is generated if the ORE flag is set during multi buffer communication if the EIE bit is set.

This bit is permanently forced to 0 (no overrun detection) when the bit OVRDIS is set in the USART_CR3 register.

Bit 2 **NE**: Noise detection flag

This bit is set by hardware when noise is detected on a received frame. It is cleared by software, writing 1 to the NECF bit in the USART_ICR register.

0: No noise is detected

1: Noise is detected

Note: This bit does not generate an interrupt as it appears at the same time as the RXNE bit which itself generates an interrupt. An interrupt is generated when the NE flag is set during multi buffer communication if the EIE bit is set.

When the line is noise-free, the NE flag can be disabled by programming the ONEBIT bit to 1 to increase the USART tolerance to deviations (Refer to Section 28.5.8: Tolerance of the USART receiver to clock deviation on page 855).

Bit 1 **FE**: Framing error

This bit is set by hardware when a de-synchronization, excessive noise or a break character is detected. It is cleared by software, writing 1 to the FECF bit in the USART_ICR register.

When transmitting data in smartcard mode, this bit is set when the maximum number of transmit attempts is reached without success (the card NACKs the data frame).

An interrupt is generated if EIE = 1 in the USART_CR3 register.

0: No Framing error is detected

1: Framing error or break character is detected

Bit 0 **PE**: Parity error

This bit is set by hardware when a parity error occurs in receiver mode. It is cleared by software, writing 1 to the PECF in the USART_ICR register.

An interrupt is generated if PEIE = 1 in the USART_CR1 register.

0: No parity error

1: Parity error

28.8.11 USART interrupt flag clear register (USART_ICR)

Address offset: 0x20

Reset value: 0x0000 0000

31	30	29	28	27	26	25	24	23	22	21	20	19	18	17	16
Res.	Res.	Res.	Res.	Res.	Res.	Res.	Res.	Res.	Res.	Res.	WUCF	Res.	Res.	CMCF	Res.
											w			w	

15	14	13	12	11	10	9	8	7	6	5	4	3	2	1	0
Res.	Res.	UDRCF	EOBCF	RTOCF	Res.	CTSCF	LBDCF	TCBGTCF	TCCF	TXFECF	IDLECF	ORECF	NECF	FECF	PECF
		w	w	w		w	w	w	w	w	w	w	w	w	w

Bits 31:21 Reserved, must be kept at reset value.

Bit 20 **WUCF**: Wake-up from low-power mode clear flag

Writing 1 to this bit clears the WUF flag in the USART_ISR register.

Note: If the USART does not support the wake-up from Stop feature, this bit is reserved and must be kept at reset value. Refer to Section 28.4: USART implementation on page 838.

Bits 19:18 Reserved, must be kept at reset value.

Bit 17 **CMCF**: Character match clear flag

Writing 1 to this bit clears the CMF flag in the USART_ISR register.

Bits 16:14 Reserved, must be kept at reset value.

Bit 13 **UDRCF**:SPI slave underrun clear flag

Writing 1 to this bit clears the UDRF flag in the USART_ISR register.

Note: If the USART does not support SPI slave mode, this bit is reserved and must be kept at reset value. Refer to Section 28.4: USART implementation on page 838

Bit 12 **EOBCF**: End of block clear flag

Writing 1 to this bit clears the EOBF flag in the USART_ISR register.

Note: If the USART does not support smartcard mode, this bit is reserved and must be kept at reset value. Refer to Section 28.4: USART implementation on page 838.

Bit 11 **RTOCF**: Receiver timeout clear flag

Writing 1 to this bit clears the RTOF flag in the USART_ISR register.

Note: If the USART does not support the Receiver timeout feature, this bit is reserved and must be kept at reset value. Refer to Section 28.4: USART implementation on page 838.

Bit 10 Reserved, must be kept at reset value.

Bit 9 **CTSCF**: CTS clear flag

Writing 1 to this bit clears the CTSIF flag in the USART_ISR register.

Note: If the hardware flow control feature is not supported, this bit is reserved and must be kept at reset value. Refer to Section 28.4: USART implementation on page 838.

Bit 8 **LBDCF**: LIN break detection clear flag

Writing 1 to this bit clears the LBDF flag in the USART_ISR register.

Note: If LIN mode is not supported, this bit is reserved and must be kept at reset value. Refer to Section 28.4: USART implementation on page 838.

Bit 7 **TCBGTCF**: Transmission complete before Guard time clear flag

Writing 1 to this bit clears the TCBGT flag in the USART_ISR register.

Bit 6 **TCCF**: Transmission complete clear flag

Writing 1 to this bit clears the TC flag in the USART_ISR register.

Bit 5 **TXFECF**: TXFIFO empty clear flag

Writing 1 to this bit clears the TXFE flag in the USART_ISR register.

Bit 4 **IDLECF**: Idle line detected clear flag

Writing 1 to this bit clears the IDLE flag in the USART_ISR register.

Bit 3 **ORECF**: Overrun error clear flag

Writing 1 to this bit clears the ORE flag in the USART_ISR register.

Bit 2 **NECF**: Noise detected clear flag

Writing 1 to this bit clears the NE flag in the USART_ISR register.

Bit 1 **FECF**: Framing error clear flag

Writing 1 to this bit clears the FE flag in the USART_ISR register.

Bit 0 **PECF**: Parity error clear flag

Writing 1 to this bit clears the PE flag in the USART_ISR register.

28.8.12 USART receive data register (USART_RDR)

Address offset: 0x24

Reset value: 0x0000 0000

31	30	29	28	27	26	25	24	23	22	21	20	19	18	17	16
Res.	Res.	Res.	Res.	Res.	Res.	Res.	Res.	Res.	Res.	Res.	Res.	Res.	Res.	Res.	Res.

15	14	13	12	11	10	9	8	7	6	5	4	3	2	1	0
Res.	Res.	Res.	Res.	Res.	Res.	Res.	RDR[8:0]								
							r	r	r	r	r	r	r	r	r

Bits 31:9 Reserved, must be kept at reset value.

Bits 8:0 **RDR[8:0]**: Receive data value

Contains the received data character.

The RDR register provides the parallel interface between the input shift register and the internal bus (see *Figure 246*).

When receiving with the parity enabled, the value read in the MSB bit is the received parity bit.

28.8.13 USART transmit data register (USART_TDR)

Address offset: 0x28

Reset value: 0x0000 0000

31	30	29	28	27	26	25	24	23	22	21	20	19	18	17	16
Res.	Res.	Res.	Res.	Res.	Res.	Res.	Res.	Res.	Res.	Res.	Res.	Res.	Res.	Res.	Res.

15	14	13	12	11	10	9	8	7	6	5	4	3	2	1	0
Res.	Res.	Res.	Res.	Res.	Res.	Res.	TDR[8:0]								
							rw	rw	rw	rw	rw	rw	rw	rw	rw

Bits 31:9 Reserved, must be kept at reset value.

Bits 8:0 **TDR[8:0]**: Transmit data value

Contains the data character to be transmitted.

The USART_TDR register provides the parallel interface between the internal bus and the output shift register (see *Figure 246*).

When transmitting with the parity enabled (PCE bit set to 1 in the USART_CR1 register), the value written in the MSB (bit 7 or bit 8 depending on the data length) has no effect because it is replaced by the parity.

Note: This register must be written only when TXE/TXFNF = 1.

28.8.14 USART prescaler register (USART_PRESC)

This register can only be written when the USART is disabled (UE = 0).

Address offset: 0x2C

Reset value: 0x0000 0000

31	30	29	28	27	26	25	24	23	22	21	20	19	18	17	16
Res.	Res.	Res.	Res.	Res.	Res.	Res.	Res.	Res.	Res.	Res.	Res.	Res.	Res.	Res.	Res.

15	14	13	12	11	10	9	8	7	6	5	4	3	2	1	0
Res.	Res.	Res.	Res.	Res.	Res.	Res.	Res.	Res.	Res.	Res.	Res.	PRESCALER[3:0]			
												rw	rw	rw	rw

Bits 31:4 Reserved, must be kept at reset value.

Bits 3:0 **PRESCALER[3:0]**: Clock prescaler

The USART input clock can be divided by a prescaler factor:

0000: input clock not divided
0001: input clock divided by 2
0010: input clock divided by 4
0011: input clock divided by 6
0100: input clock divided by 8
0101: input clock divided by 10
0110: input clock divided by 12
0111: input clock divided by 16
1000: input clock divided by 32
1001: input clock divided by 64
1010: input clock divided by 128
1011: input clock divided by 256
Remaining combinations: Reserved

Note: When PRESCALER is programmed with a value different of the allowed ones, programmed prescaler value is 1011 i.e. input clock divided by 256.
If the prescaler is not supported, this bitfield is reserved and must be kept at reset value. Refer to Section 28.4: USART implementation on page 838.

28.8.15 USART register map

The table below gives the USART register map and reset values.

Table 183. USART register map and reset values

Offset	Register name reset value	31	30	29	28	27	26	25	24	23	22	21	20	19	18	17	16	15	14	13	12	11	10	9	8	7	6	5	4	3	2	1	0
0x00	USART_CR1 FIFO enabled	RXFFIE	TXFEIE	FIFOEN	M1	EOBIE	RTOIE	DEAT[4:0]					DEDT[4:0]					OVER8	CMIE	MME	M0	WAKE	PCE	PS	PEIE	TXFNFIE	TCIE	RXFNEIE	IDLEIE	TE	RE	UESM	UE
	Reset value	0	0	0	0	0	0	0	0	0	0	0	0	0	0	0	0	0	0	0	0	0	0	0	0	0	0	0	0	0	0	0	0
0x00	USART_CR1 FIFO disabled	Res.	Res.	FIFOEN	M1	EOBIE	RTOIE	DEAT[4:0]					DEDT[4:0]					OVER8	CMIE	MME	M0	WAKE	PCE	PS	PEIE	TXEIE	TCIE	RXNEIE	IDLEIE	TE	RE	UESM	UE
	Reset value			0	0	0	0	0	0	0	0	0	0	0	0	0	0	0	0	0	0	0	0	0	0	0	0	0	0	0	0	0	0
0x04	USART_CR2	ADD[7:0]								RTOEN	ABRMOD[1:0]		ABREN	MSBFIRST	DATAINV	TXINV	RXINV	SWAP	LINEN	STOP [1:0]		CLKEN	CPOL	CPHA	LBCL	Res.	LBDIE	LBDL	ADDM7	DIS_NSS	Res.	Res.	SLVEN
	Reset value	0	0	0	0	0	0	0	0	0	0	0	0	0	0	0	0	0	0	0	0	0	0	0	0		0	0	0	0			0
0x08	USART_CR3	TXFTCFG[2:0]			RXFTIE	RXFTCFG[2:0]			TCBGTIE	TXFTIE	WUFIE	WUS [1:0]		SCAR CNT2:0]			Res.	DEP	DEM	DDRE	OVRDIS	ONEBIT	CTSIE	CTSE	RTSE	DMAT	DMAR	SCEN	NACK	HDSEL	IRLP	IREN	EIE
	Reset value	0	0	0	0	0	0	0	0	0	0	0	0	0	0	0		0	0	0	0	0	0	0	0	0	0	0	0	0	0	0	0
0x0C	USART_BRR	Res.	Res.	Res.	Res.	Res.	Res.	Res.	Res.	Res.	Res.	Res.	Res.	Res.	Res.	Res.	Res.	BRR[15:0]															
	Reset value																	0	0	0	0	0	0	0	0	0	0	0	0	0	0	0	0
0x10	USART_GTPR	Res.	Res.	Res.	Res.	Res.	Res.	Res.	Res.	Res.	Res.	Res.	Res.	Res.	Res.	Res.	Res.	GT[7:0]								PSC[7:0]							
	Reset value																	0	0	0	0	0	0	0	0	0	0	0	0	0	0	0	0
0x14	USART_RTOR	BLEN[7:0]								RTO[23:0]																							
	Reset value	0	0	0	0	0	0	0	0	0	0	0	0	0	0	0	0	0	0	0	0	0	0	0	0	0	0	0	0	0	0	0	0
0x18	USART_RQR	Res.	Res.	Res.	Res.	Res.	Res.	Res.	Res.	Res.	Res.	Res.	Res.	Res.	Res.	Res.	Res.	Res.	Res.	Res.	Res.	Res.	Res.	Res.	Res.	Res.	Res.	Res.	TXFRQ	RXFRQ	MMRQ	SBKRQ	ABRRQ
	Reset value																												0	0	0	0	0
0x1C	USART_ISR FIFO mode enabled	Res.	Res.	Res.	Res.	TXFT	RXFT	TCBGT	RXFF	TXFE	REACK	TEACK	WUF	RWU	SBKF	CMF	BUSY	ABRF	ABRE	UDR	EOBF	RTOF	CTS	CTSIF	LBDF	TXFNF	TC	RXFNE	IDLE	ORE	NE	FE	PE
	Reset value					X	X	X	X	1	0	0	0	0	0	0	0	0	0	0	0	0	0	0	0	1	1	0	0	0	0	0	0
0x1C	USART_ISR FIFO mode disabled	Res.	Res.	Res.	Res.	Res.	Res.	TCBGT	Res.	Res.	REACK	TEACK	WUF	RWU	SBKF	CMF	BUSY	ABRF	ABRE	UDR	EOBF	RTOF	CTS	CTSIF	LBDF	TXE	TC	RXNE	IDLE	ORE	NE	FE	PE
	Reset value							0			0	0	0	0	0	0	0	0	0	0	0	0	0	0	0	1	1	0	0	0	0	0	0
0x20	USART_ICR	Res.	Res.	Res.	Res.	Res.	Res.	Res.	Res.	Res.	Res.	Res.	WUCF	Res.	Res.	CMCF	Res.	Res.	Res.	UDRCF	EOBCF	RTOCF	Res.	CTSCF	LBDCF	TCBGTCF	TCCF	TXFECF	IDLECF	ORECF	NECF	FECF	PECF
	Reset value												0			0				0	0	0		0	0	0	0	0	0	0	0	0	0
0x24	USART_RDR	Res.	Res.	Res.	Res.	Res.	Res.	Res.	Res.	Res.	Res.	Res.	Res.	Res.	Res.	Res.	Res.	Res.	Res.	Res.	Res.	Res.	Res.	Res.	RDR[8:0]								
	Reset value																								0	0	0	0	0	0	0	0	0

Table 183. USART register map and reset values (continued)

Offset	Register name reset value	31	30	29	28	27	26	25	24	23	22	21	20	19	18	17	16	15	14	13	12	11	10	9	8	7	6	5	4	3	2	1	0
0x28	USART_TDR	Res.	Res.	Res.	Res.	Res.	Res.	Res.	Res.	Res.	Res.	Res.	Res.	Res.	Res.	Res.	Res.	Res.	Res.	Res.	Res.	Res.	Res.	Res.	TDR[8:0]								
	Reset value																								0	0	0	0	0	0	0	0	0
0x2C	USART_PRESC	Res.	Res.	Res.	Res.	Res.	Res.	Res.	Res.	Res.	Res.	Res.	Res.	Res.	Res.	Res.	Res.	Res.	Res.	Res.	Res.	Res.	Res.	Res.	Res.	Res.	Res.	Res.	Res.	PRESCALER[3:0]			
	Reset value																													0	0	0	0

Refer to *Section 2.2: Memory organization* for the register boundary addresses.

29 Low-power universal asynchronous receiver transmitter (LPUART)

This section describes the low-power universal asynchronous receiver transmitted (LPUART).

29.1 LPUART introduction

The LPUART is an UART which enables bidirectional UART communications with a limited power consumption. Only 32.768 kHz LSE clock is required to enable UART communications up to 9600 baud. Higher baud rates can be reached when the LPUART is clocked by clock sources different from the LSE clock.

Even when the device is in low-power mode, the LPUART can wait for an incoming UART frame while having an extremely low energy consumption. The LPUART includes all necessary hardware support to make asynchronous serial communications possible with minimum power consumption.

It supports half-duplex single-wire communications and modem operations (CTS/RTS).

It also supports multiprocessor communications.

DMA (direct memory access) can be used for data transmission/reception.

29.2 LPUART main features

- Full-duplex asynchronous communications
- NRZ standard format (mark/space)
- Programmable baud rate
- From 300 baud to 9600 baud using a 32.768 kHz clock source.
- Higher baud rates can be achieved by using a higher frequency clock source
- Two internal FIFOs to transmit and receive data

  Each FIFO can be enabled/disabled by software and come with status flags for FIFOs states.
- Dual clock domain with dedicated kernel clock for peripherals independent from PCLK.
- Programmable data word length (7 or 8 or 9 bits)
- Programmable data order with MSB-first or LSB-first shifting
- Configurable stop bits (1 or 2 stop bits)
- Single-wire half-duplex communications
- Continuous communications using DMA
- Received/transmitted bytes are buffered in reserved SRAM using centralized DMA.
- Separate enable bits for transmitter and receiver
- Separate signal polarity control for transmission and reception
- Swappable Tx/Rx pin configuration
- Hardware flow control for modem and RS-485 transceiver
- Transfer detection flags:
  - Receive buffer full
  - Transmit buffer empty
  - Busy and end of transmission flags
- Parity control:
  - Transmits parity bit
  - Checks parity of received data byte
- Four error detection flags:
  - Overrun error
  - Noise detection
  - Frame error
  - Parity error
- Interrupt sources with flags
- Multiprocessor communications: wake-up from mute mode by idle line detection or address mark detection

29.3 LPUART implementation

The table(s) below describe(s) LPUART implementation. It(they) also include(s) USARTs for comparison.

Table 184. USART / LPUART features

Modes / features[1]	USART1	LPUART1
Hardware flow control for modem	X	X
Continuous communication using DMA	X	X
Multiprocessor communication	X	X
Synchronous mode (Master/Slave)	X	-
Smartcard mode	X	-
Single-wire half-duplex communication	X	X
IrDA SIR ENDEC block	X	-
LIN mode	X	-
Dual clock domain and wake-up from low-power mode	X	X
Receiver timeout interrupt	X	-
Modbus communication	X	-
Auto baud rate detection	X	-
Driver Enable	X	X
USART data length	7, 8 and 9 bits	
Tx/Rx FIFO	X	X
Tx/Rx FIFO size	8	
Wake-up from low-power modes	X[2]	X[2]

1. X = supported.
2. Wake-up supported from Stop 0 and Stop 1 modes.

29.4 LPUART functional description

29.4.1 LPUART block diagram

Figure 273. LPUART block diagram

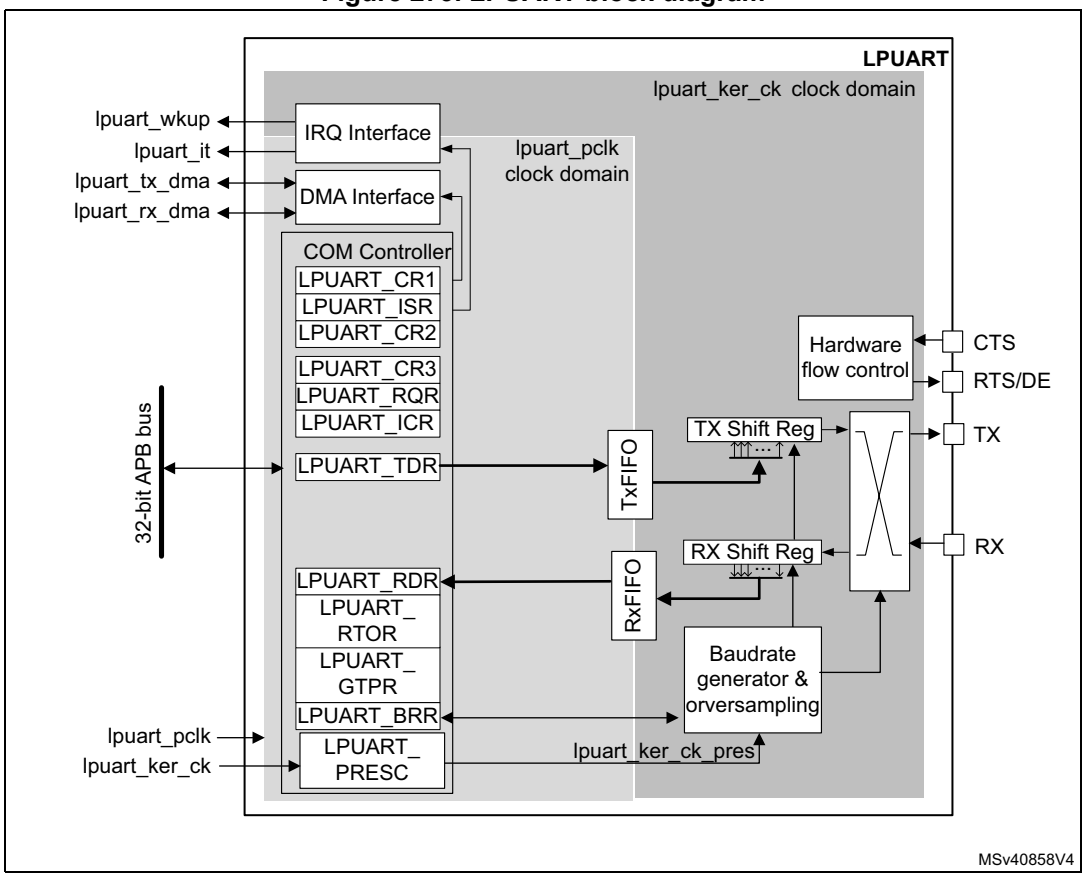

The simplified block diagram given in *Figure 273* shows two fully independent clock domains:

- The **lpuart_pclk** clock domain

  The **lpuart_pclk** clock signal feeds the peripheral bus interface. It must be active when accesses to the LPUART registers are required.

- The **lpuart_ker_ck** kernel clock domain

  The **lpuart_ker_ck** is the LPUART clock source. It is independent of the **lpuart_pclk** and delivered by the RCC. So, the LPUART registers can be written/read even when the **lpuart_ker_ck** is stopped.

  When the dual clock domain feature is disabled, the **lpuart_ker_ck i**s the same as the lpuart_pclk clock.

There is no constraint between **lpuart_pclk** and **lpuart_ker_ck**: **lpuart_ker_ck** can be faster or slower than **lpuart_pclk**, with no more limitation than the ability for the software to manage the communication fast enough.

29.4.2 LPUART signals

LPUART bidirectional communications requires a minimum of two pins: Receive Data In (RX) and Transmit Data Out (TX):

- **RX** (Receive Data Input)

  RX is the serial data input.
- **TX (**Transmit Data Output)

  When the transmitter is disabled, the output pin returns to its I/O port configuration. When the transmitter is enabled and nothing is to be transmitted, the TX pin is at high level. In single-wire mode, this I/O is used to transmit and receive the data.

RS232 hardware flow control mode

The following pins are required in RS232 hardware flow control mode:

- **CTS (**Clear To Send)

  When driven high, this signal blocks the data transmission at the end of the current transfer.
- **RTS** (Request to send)

  When it is low, this signal indicates that the USART is ready to receive data.

RS485 hardware flow control mode

The following pin is required in RS485 hardware control mode:

- **DE** (Driver Enable)

  This signal activates the transmission mode of the external transceiver.

Note: DE and RTS share the same pin.

Refer to *Table 185* and *Table 186* for the list of USART input/output pins and internal signals.

Table 185. LPUART input/output pins

Pin name	Signal type	Description
LPUART_RX	Input	Serial data receive input
LPUART_TX	Output	Transmit data output
LPUART_CTS	Input	Clear to send
LPUART_RTS	Output	Request to send
LPUART_DE(1)	Output	Driver enable

1. LPUART_DE and LPUART_RTS share the same pin.

Description of USART input/output signals

Table 186. LPUART internal input/output signals

Pin name	Signal type	Description
lpuart_pclk	Input	APB clock
lpuart_ker_ck	Input	USART kernel clock

Table 186. LPUART internal input/output signals (continued)

Pin name	Signal type	Description
lpuart_wkup	Output	USART provides a wake-up interrupt
lpuart_it	Output	USART global interrupt
lpuart_tx_dma	Input/output	USART transmit DMA request
lpuart_rx_dma	Input/output	USART receive DMA request

29.4.3 LPUART character description

The word length can be set to 7 or 8 or 9 bits, by programming the M bits (M0: bit 12 and M1: bit 28) in the LPUART_CR1 register (see *Figure 247*).

- 7-bit character length: M[1:0] = ‘10’
- 8-bit character length: M[1:0] = ‘00’
- 9-bit character length: M[1:0] = ‘01’

By default, the signal (TX or RX) is in low state during the start bit. It is in high state during the stop bit.

These values can be inverted, separately for each signal, through polarity configuration control.

An ***Idle character*** is interpreted as an entire frame of “1”s. (The number of “1” ‘s includes the number of stop bits).

A ***Break character*** is interpreted on receiving “0”s for a frame period. At the end of the break frame, the transmitter inserts 2 stop bits.

Transmission and reception are driven by a common baud rate generator. The transmission and reception clocks are generated when the enable bit is set for the transmitter and receiver, respectively.

The details of each block is given below.

Figure 274. LPUART word length programming

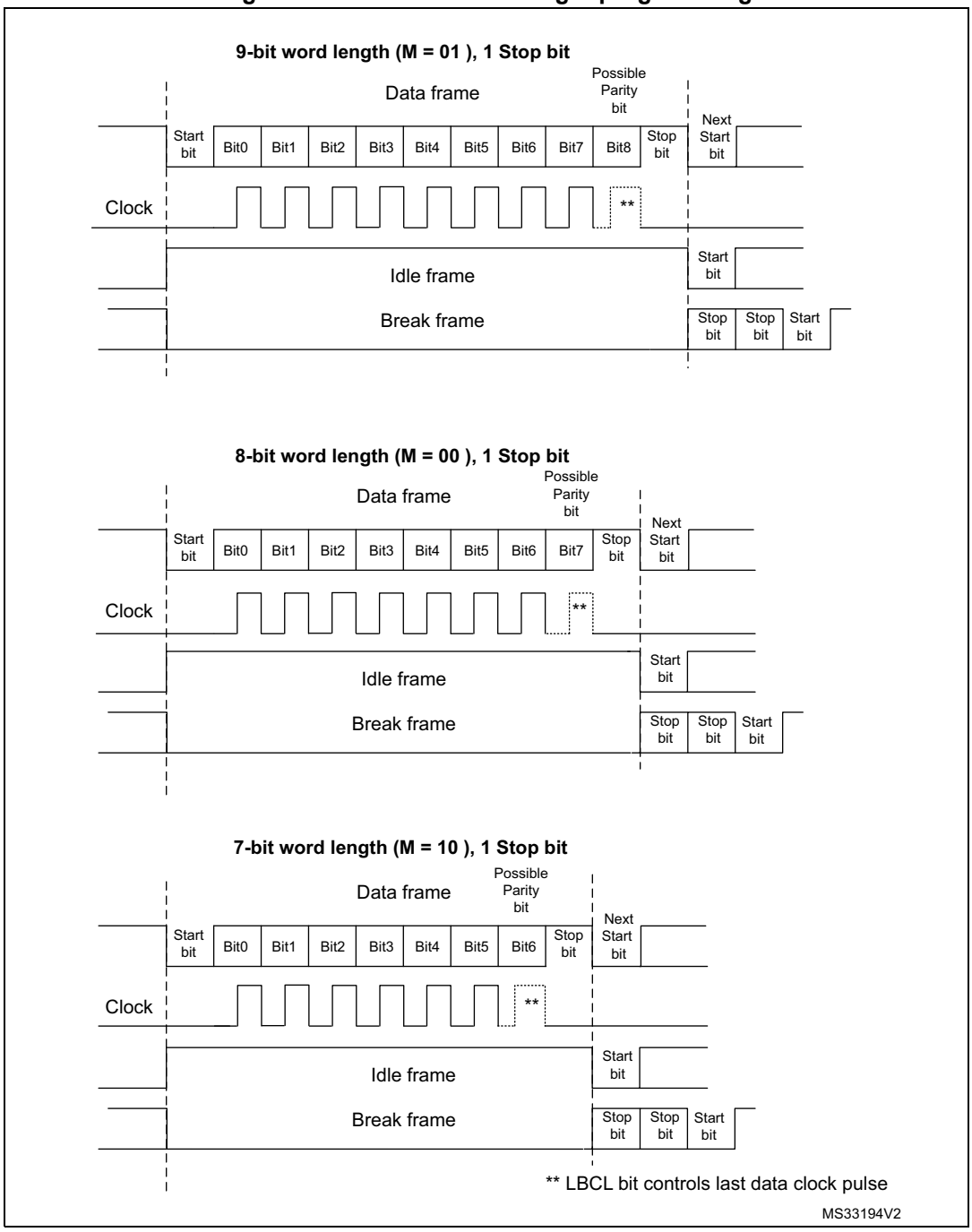

29.4.4 LPUART FIFOs and thresholds

The LPUART can operate in FIFO mode.

The LPUART comes with a Transmit FIFO (TXFIFO) and a Receive FIFO (RXFIFO). The FIFO mode is enabled by setting FIFOEN bit (bit 29) in LPUART_CR1 register.

Since the maximum data word length is 9 bits, the TXFIFO is 9-bit wide. However the RXFIFO default width is 12 bits. This is due to the fact that the receiver does not only store

the data in the FIFO, but also the error flags associated to each character (Parity error, Noise error and Framing error flags).

Note: The received data is stored in the RXFIFO together with the corresponding flags. However, only the data are read when reading the RDR.

The status flags are available in the LPUART_ISR register.

It is possible to define the TXFIFO and RXFIFO levels at which the Tx and RX interrupts are triggered. These thresholds are programmed through RXFTCFG and TXFTCFG bitfields in LPUART_CR3 control register.

In this case:

- The RXFT flag is set in the LPUART_ISR register and the corresponding interrupt (if enabled) is generated, when the number of received data in the RXFIFO reaches the threshold programmed in the RXFTCFG bits fields.

  This means that the RXFIFO is filled until the number of data in the RXFIFO is equal to the programmed threshold.

  RXFTCFG data have been received: one data in LPUART_RDR and (RXFTCFG - 1) data in the RXFIFO. As an example, when the RXFTCFG is programmed to '101', the RXFT flag is set when a number of data corresponding to the FIFO size has been received: FIFO size - 1 data in the RXFIFO and 1 data in the LPUART_RDR. As a result, the next received data does not set the overrun flag.
- The TXFT flag is set in the LPUART_ISR register and the corresponding interrupt (if enabled) is generated when the number of empty locations in the TXFIFO reaches the threshold programmed in the TXFTCFG bits fields.

  This means that the TXFIFO is emptied until the number of empty locations in the TXFIFO is equal to the programmed threshold.

29.4.5 LPUART transmitter

The transmitter can send data words of either 7 or 8 or 9 bits, depending on the M bit status. The Transmit Enable bit (TE) must be set in order to activate the transmitter function. The data in the transmit shift register is output on the TX pin.

Character transmission

During an LPUART transmission, data shifts out least significant bit first (default configuration) on the TX pin. In this mode, the LPUART_TDR register consists of a buffer (TDR) between the internal bus and the transmit shift register (see *Figure 273*).

When FIFO mode is enabled, the data written to the LPUART_TDR register are queued in the TXFIFO.

Every character is preceded by a start bit which corresponds to a low logic level for one bit period. The character is terminated by a configurable number of stop bits.

The number of stop bits can be 1 or 2.

Note: The TE bit must be set before writing the data to be transmitted to the LPUART_TDR.

The TE bit should not be reset during data transmission. Resetting the TE bit during the transmission corrupts the data on the TX pin as the baud rate counters is frozen. The current data being transmitted are lost.

An idle frame is sent after the TE bit is enabled.

Configurable stop bits

The number of stop bits to be transmitted with every character can be programmed in LPUART_CR2 (bits 13,12).

- ***1 stop bit***: This is the default value of number of stop bits.
- ***2 Stop bits***: This is supported by normal LPUART, single-wire and modem modes.

An idle frame transmission includes the stop bits.

A break transmission is 10 low bits (when M[1:0] = ‘00’) or 11 low bits (when M[1:0] = ‘01’) or 9 low bits (when M[1:0] = ‘10’) followed by 2 stop bits. It is not possible to transmit long breaks (break of length greater than 9/10/11 low bits).

Figure 275. Configurable stop bits

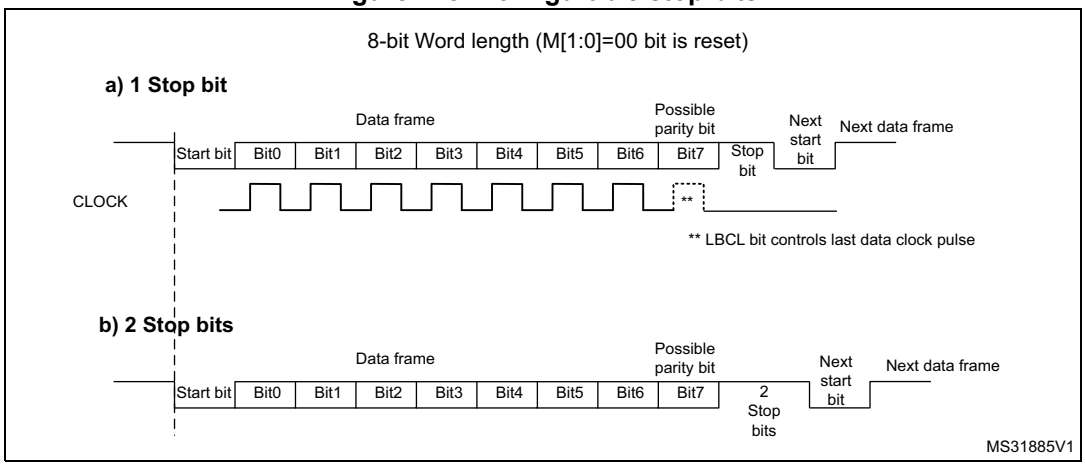

Character transmission procedure

To transmit a character, follow the sequence below:

1. Program the M bits in LPUART_CR1 to define the word length.
2. Select the desired baud rate using the LPUART_BRR register.
3. Program the number of stop bits in LPUART_CR2.
4. Enable the LPUART by writing the UE bit in LPUART_CR1 register to ‘1’.
5. Select DMA enable (DMAT) in LPUART_CR3 if Multi buffer Communication is to take place. Configure the DMA register as explained in *Section 29.4.12: Continuous communication using DMA and LPUART*.
6. Set the TE bit in LPUART_CR1 to send an idle frame as first transmission.
7. Write the data to send in the LPUART_TDR register. Repeat this operation for each data to be transmitted in case of single buffer.
   - When FIFO mode is disabled, writing a data in the LPUART_TDR clears the TXE flag.
   - When FIFO mode is enabled, writing a data in the LPUART_TDR adds one data to the TXFIFO. Write operations to the LPUART_TDR are performed when TXFNF flag is set. This flag remains set until the TXFIFO is full.
8. When the last data is written to the LPUART_TDR register, wait until TC = 1. This indicates that the transmission of the last frame is complete.
   - When FIFO mode is disabled, this indicates that the transmission of the last frame is complete.

– When FIFO mode is enabled, this indicates that both TXFIFO and shift register are empty.

This check is required to avoid corrupting the last transmission when the LPUART is disabled or enters Halt mode.

Single byte communication

- When FIFO mode disabled:

  Writing to the transmit data register always clears the TXE bit. The TXE flag is set by hardware to indicate that:

  – the data have been moved from the LPUART_TDR register to the shift register and data transmission has started;

  – the LPUART_TDR register is empty;

  – the next data can be written to the LPUART_TDR register without overwriting the previous data.

  The TXE flag generates an interrupt if the TXEIE bit is set.

  When a transmission is ongoing, a write instruction to the LPUART_TDR register stores the data in the TDR register, which is copied to the shift register at the end of the current transmission.

  When no transmission is ongoing, a write instruction to the LPUART_TDR register places the data in the shift register, the data transmission starts, and the TXE bit is set.

- When FIFO mode is enabled, the TXFNF (TXFIFO Not Full) flag is set by hardware to indicate that:

  – the TXFIFO is not full;

  – the LPUART_TDR register is empty;

  – the next data can be written to the LPUART_TDR register without overwriting the previous data. When a transmission is ongoing, a write operation to the LPUART_TDR register stores the data in the TXFIFO. Data are copied from the TXFIFO to the shift register at the end of the current transmission.

  When the TXFIFO is not full, the TXFNF flag stays at ‘1’ even after a write in LPUART_TDR. It is cleared when the TXFIFO is full. This flag generates an interrupt if TXFNEIE bit is set.

  Alternatively, interrupts can be generated and data can be written to the TXFIFO when the TXFIFO threshold is reached. In this case, the CPU can write a block of data defined by the programmed threshold.

  If a frame is transmitted (after the stop bit) and the TXE flag (TXFE is case of FIFO mode) is set, the TC bit goes high. An interrupt is generated if the TCIE bit is set in the LPUART_CR1 register.

  After writing the last data in the LPUART_TDR register, it is mandatory to wait for TC = 1 before disabling the LPUART or causing the device to enter the low-power mode (see *Figure 276: TC/TXE behavior when transmitting*).

Figure 276. TC/TXE behavior when transmitting

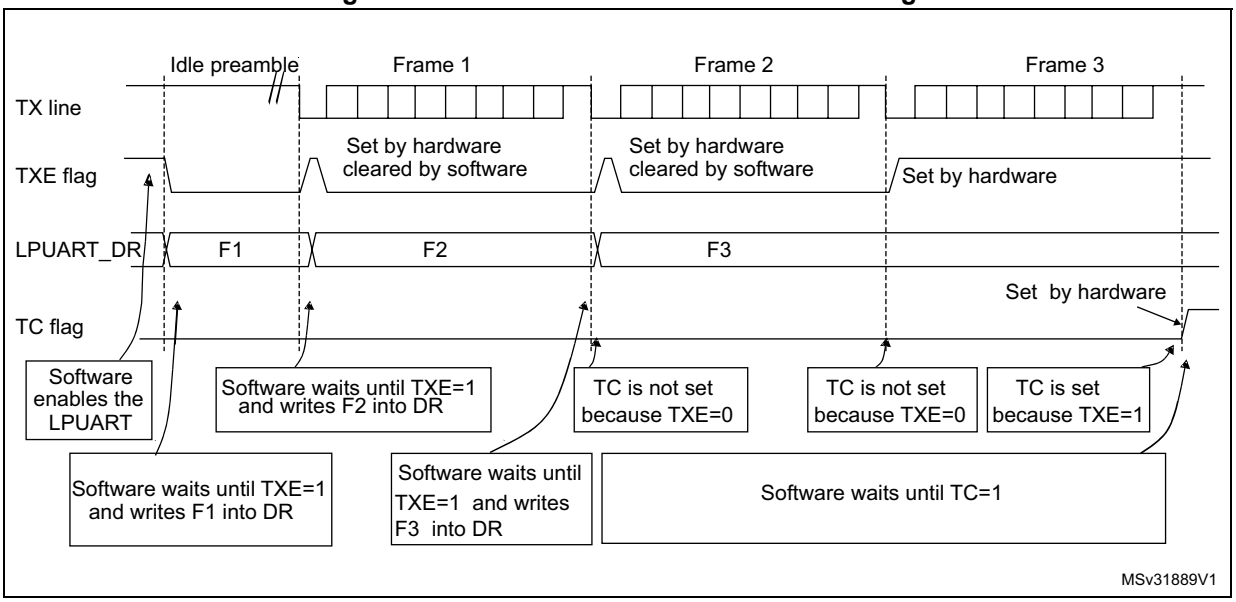

Note: When FIFO management is enabled, the TXFNF flag is used for data transmission.

Break characters

Setting the SBKRQ bit transmits a break character. The break frame length depends on the M bits (see *Figure 274*).

If a ‘1’ is written to the SBKRQ bit, a break character is sent on the TX line after completing the current character transmission. The SBKF bit is set by the write operation and it is reset by hardware when the break character is completed (during the stop bits after the break character). The LPUART inserts a logic 1 signal (STOP) for the duration of 2 bits at the end of the break frame to guarantee the recognition of the start bit of the next frame.

When the SBKRQ bit is set, the break character is sent at the end of the current transmission.

When FIFO mode is enabled, sending the break character has priority on sending data even if the TXFIFO is full.

Idle characters

Setting the TE bit drives the LPUART to send an idle frame before the first data frame.

29.4.6 LPUART receiver

The LPUART can receive data words of either 7 or 8 or 9 bits depending on the M bits in the LPUART_CR1 register.

Start bit detection

In the LPUART, the start bit is detected when a falling edge occurs on the Rx line, followed by a sample taken in the middle of the start bit to confirm that it is still ‘0’. If the start sample is at ‘1’, then the noise error flag (NE) is set, then the start bit is discarded and the receiver waits for a new start bit. Else, the receiver continues to sample all incoming bits normally.

Character reception

During an LPUART reception, data are shifted in least significant bit first (default configuration) through the RX pin. In this mode, the LPUART_RDR register consists of a buffer (RDR) between the internal bus and the received shift register.

Character reception procedure

To receive a character, follow the sequence below:

1. Program the M bits in LPUART_CR1 to define the word length.
2. Select the desired baud rate using the baud rate register LPUART_BRR
3. Program the number of stop bits in LPUART_CR2.
4. Enable the LPUART by writing the UE bit in LPUART_CR1 register to ‘1’.
5. Select DMA enable (DMAR) in LPUART_CR3 if multibuffer communication is to take place. Configure the DMA register as explained in *Section 29.4.12: Continuous communication using DMA and LPUART*.
6. Set the RE bit LPUART_CR1. This enables the receiver which begins searching for a start bit.

When a character is received

- When FIFO mode is disabled, the RXNE bit is set. It indicates that the content of the shift register is transferred to the RDR. In other words, data has been received and can be read (as well as its associated error flags).
- When FIFO mode is enabled, the RXFNE bit is set indicating that the RXFIFO is not empty. Reading the LPUART_RDR returns the oldest data entered in the RXFIFO. When a data is received, it is stored in the RXFIFO, together with the corresponding error bits.
- An interrupt is generated if the RXNEIE (RXFNEIE in case of FIFO mode) bit is set.
- The error flags can be set if a frame error, noise or an overrun error has been detected during reception.
- In multibuffer communication mode:
  - When FIFO mode is disabled, the RXNE flag is set after every byte received and is cleared by the DMA read of the Receive Data Register.
  - When FIFO mode is enabled, the RXFNE flag is set when the RXFIFO is not empty. After every DMA request, a data is retrieved from the RXFIFO. DMA request is triggered by RXFIFO is not empty i.e. there is a data in the RXFIFO to be read.
- In single buffer mode:
  - When FIFO mode is disabled, clearing the RXNE flag is done by performing a software read from the LPUART_RDR register. The RXNE flag can also be cleared by writing 1 to the RXFRQ in the LPUART_RQR register. The RXNE bit must be cleared before the end of the reception of the next character to avoid an overrun error.
  - When FIFO mode is enabled, the RXFNE flag is set when the RXFIFO is not empty. After every read operation from the LPUART_RDR register, a data is retrieved from the RXFIFO. When the RXFIFO is empty, the RXFNE flag is cleared. The RXFNE flag can also be cleared by writing 1 to the RXFRQ bit in the LPUART_RQR register. When the RXFIFO is full, the first entry in the RXFIFO must be read before the end of the reception of the next character to avoid an overrun error. The RXFNE flag generates an interrupt if the RXFNEIE bit is set.

Alternatively, interrupts can be generated and data can be read from RXFIFO when the RXFIFO threshold is reached. In this case, the CPU can read a block of data defined by the programmed threshold.

Break character

When a break character is received, the LPUART handles it as a framing error.

Idle character

When an idle frame is detected, it is handled in the same way as a data character reception except that an interrupt is generated if the IDLEIE bit is set.

Overrun error

- FIFO mode disabled

  An overrun error occurs when a character is received when RXNE has not been reset.

  Data can not be transferred from the shift register to the RDR register until the RXNE bit is cleared. The RXNE flag is set after every byte received.

  An overrun error occurs if RXNE flag is set when the next data is received or the previous DMA request has not been serviced. When an overrun error occurs:
  - the ORE bit is set;
  - the RDR content is not lost. The previous data is available when a read to LPUART_RDR is performed.;
  - the shift register is overwritten. After that, any data received during overrun is lost.
  - an interrupt is generated if either the RXNEIE bit or EIE bit is set.
- FIFO mode enabled

  An overrun error occurs when the shift register is ready to be transferred when the receive FIFO is full.

  Data can not be transferred from the shift register to the LPUART_RDR register until there is one free location in the RXFIFO. The RXFNE flag is set when the RXFIFO is not empty.

  An overrun error occurs if the RXFIFO is full and the shift register is ready to be transferred. When an overrun error occurs:
  - the ORE bit is set;
  - the first entry in the RXFIFO is not lost. It is available when a read to LPUART_RDR is performed.
  - the shift register is overwritten. After that, any data received during overrun is lost.
  - an interrupt is generated if either the RXFNEIE bit or EIE bit is set.

The ORE bit is reset by setting the ORECF bit in the ICR register.

Note: The ORE bit, when set, indicates that at least 1 data has been lost. T

When the FIFO mode is disabled, there are two possibilities

- *if RXNE = 1, then the last valid data is stored in the receive register (RDR) and can be read,*
- *if RXNE = 0, then the last valid data has already been read and there is nothing left to be read in the RDR. This case can occur when the last valid data is read in the RDR at the same time as the new (and lost) data is received.*

Selecting the clock source

The choice of the clock source is done through the Clock Control system (see *Section Reset and clock controller (RCC)*). The clock source must be selected through the UE bit, before enabling the LPUART.

The clock source must be selected according to two criteria:

- Possible use of the LPUART in low-power mode
- Communication speed.

The clock source frequency is lpuart_ker_ck.

When the dual clock domain and the wake-up from low-power mode features are supported, the lpuart_ker_ck clock source can be configured in the RCC (see *Section Reset and clock controller (RCC)*). Otherwise, the lpuart_ker_ck is the same as lpuart_pclk.

The lpuart_ker_ck can be divided by a programmable factor in the LPUART_PRESC register.

Figure 277. lpuart_ker_ck clock divider block diagram

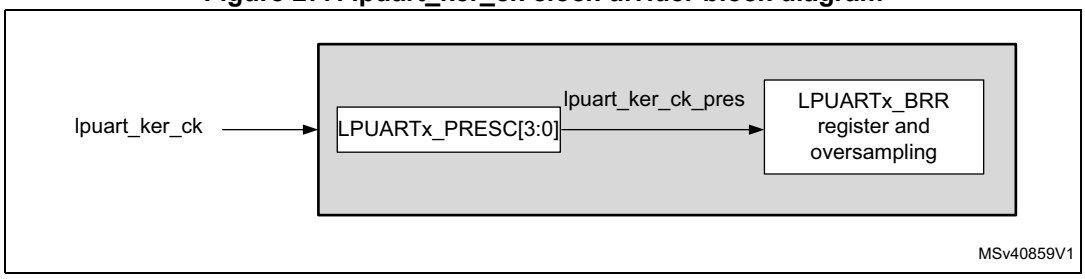

Some lpuart_ker_ck sources enable the LPUART to receive data while the MCU is in low-power mode. Depending on the received data and wake-up mode selection, the LPUART wakes up the MCU, when needed, in order to transfer the received data by software reading the LPUART_RDR register or by DMA.

For the other clock sources, the system must be active to enable LPUART communications.

The communication speed range (specially the maximum communication speed) is also determined by the clock source.

The receiver samples each incoming bit as close as possible to the middle of the bit-period. Only a single sample is taken of each of the incoming bits.

Note: There is no noise detection for data.

Framing error

A framing error is detected when the stop bit is not recognized on reception at the expected time, following either a de-synchronization or excessive noise.

When the framing error is detected:

- the FE bit is set by hardware;
- the invalid data is transferred from the Shift register to the LPUART_RDR register.
- no interrupt is generated in case of single byte communication. However this bit rises at the same time as the RXNE bit which itself generates an interrupt. In case of

multibuffer communication, an interrupt is issued if the EIE bit is set in the LPUART_CR3 register.

The FE bit is reset by writing 1 to the FECF in the LPUART_ICR register.

Configurable stop bits during reception

The number of stop bits to be received can be configured through the control bits of LPUART_CR2: it can be either 1 or 2 in normal mode.

- **1 stop bit**: sampling for 1 stop bit is done on the 8th, 9th and 10th samples.
- **2 stop bits**: sampling for the 2 stop bits is done in the middle of the second stop bit. The RXNE and FE flags are set just after this sample i.e. during the second stop bit. The first stop bit is not checked for framing error.

29.4.7 LPUART baud rate generation

The baud rate for the receiver and transmitter (Rx and Tx) are both set to the value programmed in the LPUART_BRR register.

$$\text{Tx/Rx baud} = \frac{256 \times \text{lpuartckpres}}{\text{LPUARTDIV}}$$

LPUARTDIV is defined in the LPUART_BRR register.

Note: The baud counters are updated to the new value in the baud registers after a write operation to LPUART_BRR. Hence the baud rate register value should not be changed during communication.

It is forbidden to write values lower than 0x300 in the LPUART_BRR register.

f_{CK} must range from 3 x baud rate to 4096 x baud rate.

The maximum baud rate that can be reached when the LPUART clock source is the LSE, is 9600 baud. Higher baud rates can be reached when the LPUART is clocked by clock sources different from the LSE clock. For example, if the LPUART clock source frequency is 100 MHz, the maximum baud rate that can be reached is about 33 Mbaud.

Table 187. Error calculation for programmed baud rates at lpuart_ker_ck_pres = 32.768 kHz

Baud rate		lpuart_ker_ck_pres = 32.768 kHz		
S.No	Desired	Actual	Value programmed in the baud rate register	% Error = (Calculated - Desired) B.rate / Desired B.rate
1	300 bauds	300 baud	0x6D3A	0
2	600 baud	600 baud	0x369D	0
3	1200 baud	1200.087 baud	0x1B4E	0.007
4	2400 baud	2400.17 baud	0xDA7	0.007
5	4800 baud	4801.72 baud	0x6D3	0.035
6	9600 baud	9608.94 baud	0x369	0.093

Table 188. Error calculation for programmed baud rates at f_{CK} = 100 MHz

Baud rate		f_{CK} = 100MHz		
S.No	Desired	Actual	Value programmed in the baud rate register	% Error = (Calculated - Desired) B.rate / Desired B.rate
1	38400 Baud	38400,04 Baud	A2C2A	0,0001
2	57600 Baud	57600,06 Baud	6C81C	0,0001
3	115200 Baud	115200,12 Baud	3640E	0,0001
4	230400 Baud	230400,23 Baud	1B207	0,0001
5	460800 Baud	460804,61 Baud	D903	0,001
6	921600 Baud	921625,81 Baud	6C81	0,0028
7	4000 KBaud	4000000,00 Baud	1900	0
8	10000 Kbaud	10000000,00 Baud	A00	0
9	20000 Kbaud	20000000,00 Baud	500	0
10	33000 Kbaud	33032258,06 Baud	307	0,1

29.4.8 Tolerance of the LPUART receiver to clock deviation

The asynchronous receiver of the LPUART works correctly only if the total clock system deviation is less than the tolerance of the LPUART receiver. The causes which contribute to the total deviation are:

- DTRA: deviation due to the transmitter error (which also includes the deviation of the transmitter's local oscillator)
- DQUANT: error due to the baud rate quantization of the receiver
- DREC: deviation of the receiver local oscillator
- DTCL: deviation due to the transmission line (generally due to the transceivers which can introduce an asymmetry between the low-to-high transition timing and the high-to-low transition timing)

$$DTRA + DQUANT + DREC + DTCL + DWU < \text{LPUART receiver tolerance}$$

where

DWU is the error due to sampling point deviation when the wake-up from low-power mode is used.

The LPUART receiver can receive data correctly at up to the maximum tolerated deviation specified in *Table 189*:

- Number of Stop bits defined through STOP[1:0] bits in the LPUART_CR2 register
- LPUART_BRR register value.

Table 189. Tolerance of the LPUART receiver

M bits	768 < BRR < 1024	1024 < BRR < 2048	2048 < BRR < 4096	4096 ≤ BRR
8 bits (M = 00'), 1 Stop bit	1.82%	2.56%	3.90%	4.42%
9 bits (M = 01'), 1 Stop bit	1.69%	2.33%	2.53%	4.14%
7 bits (M = '10'), 1 Stop bit	2.08%	2.86%	4.35%	4.42%
8 bits (M = 00'), 2 Stop bit	2.08%	2.86%	4.35%	4.42%
9 bits (M = 01'), 2 Stop bit	1.82%	2.56%	3.90%	4.42%
7 bits (M = '10'), 2 Stop bit	2.34%	3.23%	4.92%	4.42%

Note: The data specified in Table 189 may slightly differ in the special case when the received frames contain some Idle frames of exactly 10-bit times when M bits = '00' (11-bit times when M = '01' or 9- bit times when M = '10').

29.4.9 LPUART multiprocessor communication

It is possible to perform LPUART multiprocessor communications (with several LPUARTs connected in a network). For instance one of the LPUARTs can be the master, with its TX output connected to the RX inputs of the other LPUARTs. The others are slaves, with their respective TX outputs are logically ANDed together and connected to the RX input of the master.

In multiprocessor configurations it is often desirable that only the intended message recipient actively receives the full message contents, thus reducing redundant LPUART service overhead for all non addressed receivers.

The non addressed devices can be placed in mute mode by means of the muting function. To use the mute mode feature, the MME bit must be set in the LPUART_CR1 register.

Note: When FIFO management is enabled and MME is already set, MME bit must not be cleared and then set again quickly (within two lpuart_ker_ck *cycles), otherwise mute mode might remain active.*

When the mute mode is enabled:

- none of the reception status bits can be set;
- all the receive interrupts are inhibited;
- the RWU bit in LPUART_ISR register is set to '1'. RWU can be controlled automatically by hardware or by software, through the MMRQ bit in the LPUART_RQR register, under certain conditions.

The LPUART can enter or exit from mute mode using one of two methods, depending on the WAKE bit in the LPUART_CR1 register:

- Idle Line detection if the WAKE bit is reset,
- Address Mark detection if the WAKE bit is set.

Idle line detection (WAKE = 0)

The LPUART enters mute mode when the MMRQ bit is written to 1 and the RWU is automatically set.

The LPUART wakes up when an Idle frame is detected. The RWU bit is then cleared by hardware but the IDLE bit is not set in the LPUART_ISR register. An example of mute mode behavior using Idle line detection is given in *Figure 278*.

Figure 278. Mute mode using Idle line detection

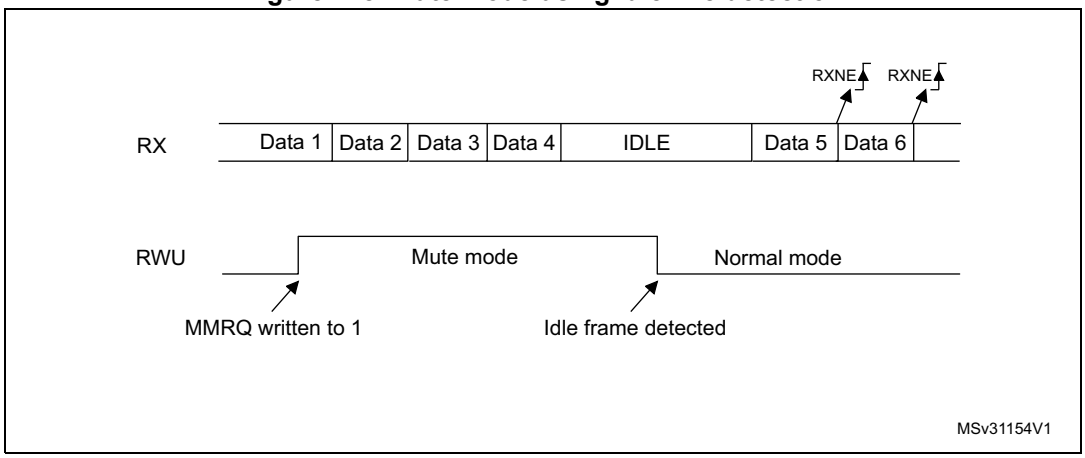

Note: If the MMRQ is set while the IDLE character has already elapsed, the mute mode is not entered (RWU is not set).

If the LPUART is activated while the line is IDLE, the idle state is detected after the duration of one IDLE frame (not only after the reception of one character frame).

4-bit/7-bit address mark detection (WAKE = 1)

In this mode, bytes are recognized as addresses if their MSB is a ‘1’ otherwise they are considered as data. In an address byte, the address of the targeted receiver is put in the 4 or 7 LSBs. The choice of 7 or 4 bit address detection is done using the ADDM7 bit. This 4-bit/7-bit word is compared by the receiver with its own address which is programmed in the ADD bits in the LPUART_CR2 register.

Note: In 7-bit and 9-bit data modes, address detection is done on 6-bit and 8-bit addresses (ADD[5:0] and ADD[7:0]) respectively.

The LPUART enters mute mode when an address character is received which does not match its programmed address. In this case, the RWU bit is set by hardware. The RXNE flag is not set for this address byte and no interrupt or DMA request is issued when the LPUART enters mute mode.

The LPUART also enters mute mode when the MMRQ bit is written to ‘1’. The RWU bit is also automatically set in this case.

The LPUART exits from mute mode when an address character is received which matches the programmed address. Then the RWU bit is cleared and subsequent bytes are received normally. The RXNE/RXFNE bit is set for the address character since the RWU bit has been cleared.

Note: When FIFO management is enabled, when MMRQ bit is set while the receiver is sampling the last bit of a data, this data may be received before effectively entering in mute mode.

An example of mute mode behavior using address mark detection is given in *Figure 279*.

Figure 279. Mute mode using address mark detection

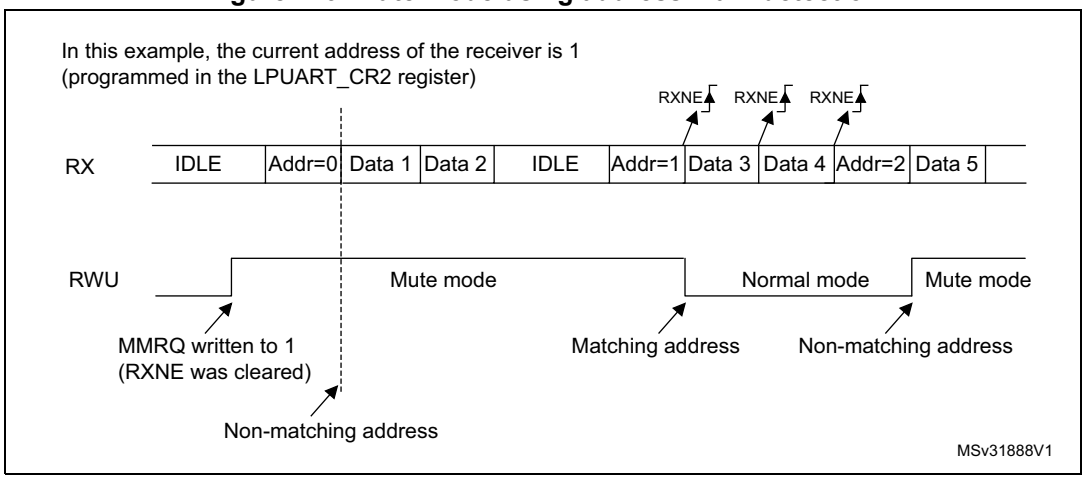

29.4.10 LPUART parity control

Parity control (generation of parity bit in transmission and parity checking in reception) can be enabled by setting the PCE bit in the LPUART_CR1 register. Depending on the frame length defined by the M bits, the possible LPUART frame formats are as listed in *Table 190*.

Table 190: LPUART frame formats

M bits	PCE bit	LPUART frame(1)
00	0	| SB | 8 bit data | STB |
00	1	| SB | 7-bit data | PB | STB |
01	0	| SB | 9-bit data | STB |
01	1	| SB | 8-bit data PB | STB |
10	0	| SB | 7bit data | STB |
10	1	| SB | 6-bit data | PB | STB |

1. Legends: SB: start bit, STB: stop bit, PB: parity bit.
2. In the data register, the PB is always taking the MSB position (8th or 7th, depending on the M bit value).

Even parity

The parity bit is calculated to obtain an even number of “1s” inside the frame which is made of the 6, 7 or 8 LSB bits (depending on M bit values) and the parity bit.

As an example, if data equal 00110101, and 4 bits are set, then the parity bit is equal to 0 if even parity is selected (PS bit in LPUART_CR1 = 0).

Odd parity

The parity bit is calculated to obtain an odd number of “1s” inside the frame made of the 6, 7 or 8 LSB bits (depending on M bit values) and the parity bit.

As an example, if data equal 00110101 and 4 bits set, then the parity bit is equal to 1 if odd parity is selected (PS bit in LPUART_CR1 = 1).

Parity checking in reception

If the parity check fails, the PE flag is set in the LPUART_ISR register and an interrupt is generated if PEIE is set in the LPUART_CR1 register. The PE flag is cleared by software writing 1 to the PECF in the LPUART_ICR register.

Parity generation in transmission

If the PCE bit is set in LPUART_CR1, then the MSB bit of the data written in the data register is transmitted but is changed by the parity bit (even number of “1s” if even parity is selected (PS = 0) or an odd number of “1s” if odd parity is selected (PS = 1)).

29.4.11 LPUART single-wire half-duplex communication

Single-wire half-duplex mode is selected by setting the HDSEL bit in the LPUART_CR3 register. In this mode, the following bits must be kept cleared:

- LINEN and CLKEN bits in the LPUART_CR2 register,
- SCEN and IREN bits in the LPUART_CR3 register.

The LPUART can be configured to follow a single-wire half-duplex protocol where the TX and RX lines are internally connected. The selection between half- and Full-duplex communication is made with a control bit HDSEL in LPUART_CR3.

As soon as HDSEL is written to ‘1’:

- The TX and RX lines are internally connected.
- The RX pin is no longer used
- The TX pin is always released when no data is transmitted. Thus, it acts as a standard I/O in idle or in reception. It means that the I/O must be configured so that TX is configured as alternate function open-drain with an external pull-up.

Apart from this, the communication protocol is similar to normal LPUART mode. Any conflict on the line must be managed by software (for instance by using a centralized arbiter). In particular, the transmission is never blocked by hardware and continues as soon as data is written in the data register while the TE bit is set.

Note: In LPUART communications, in the case of 1-stop bit configuration, the RXNE flag is set in the middle of the stop bit.

29.4.12 Continuous communication using DMA and LPUART

The LPUART is capable of performing continuous communication using the DMA. The DMA requests for Rx buffer and Tx buffer are generated independently.

Note: Refer to Section 28.4: USART implementation on page 838 to determine if the DMA mode is supported. If DMA is not supported, use the LPUSRT as explained in Section 28.5.6. To perform continuous communication. When FIFO is disabled, you can clear the TXE/ RXNE flags in the LPUART_ISR register.

Transmission using DMA

DMA mode can be enabled for transmission by setting DMAT bit in the LPUART_CR3 register. Data are loaded from an SRAM area configured using the DMA peripheral (refer to the corresponding *Direct memory access controller* section) to the LPUART_TDR register whenever the TXE flag (TXFNF flag if FIFO mode is enabled) is set. To map a DMA channel for LPUART transmission, use the following procedure (x denotes the channel number):

1. Write the LPUART_TDR register address in the DMA control register to configure it as the destination of the transfer. The data is moved to this address from memory after each TXE (or TXFNF if FIFO mode is enabled) event.
2. Write the memory address in the DMA control register to configure it as the source of the transfer. The data is loaded into the LPUART_TDR register from this memory area after each TXE (or TXFNF if FIFO mode is enabled) event.
3. Configure the total number of bytes to be transferred to the DMA control register.
4. Configure the channel priority in the DMA register
5. Configure DMA interrupt generation after half/ full transfer as required by the application.
6. Clear the TC flag in the LPUART_ISR register by setting the TCCF bit in the LPUART_ICR register.
7. Activate the channel in the DMA register.

When the number of data transfers programmed in the DMA Controller is reached, the DMA controller generates an interrupt on the DMA channel interrupt vector.

In transmission mode, once the DMA has written all the data to be transmitted (the TCIF flag is set in the DMA_ISR register), the TC flag can be monitored to make sure that the LPUART communication is complete. This is required to avoid corrupting the last transmission before disabling the LPUART or entering low-power mode. Software must wait until TC = 1. The TC flag remains cleared during all data transfers and it is set by hardware at the end of transmission of the last frame.

Figure 280. Transmission using DMA

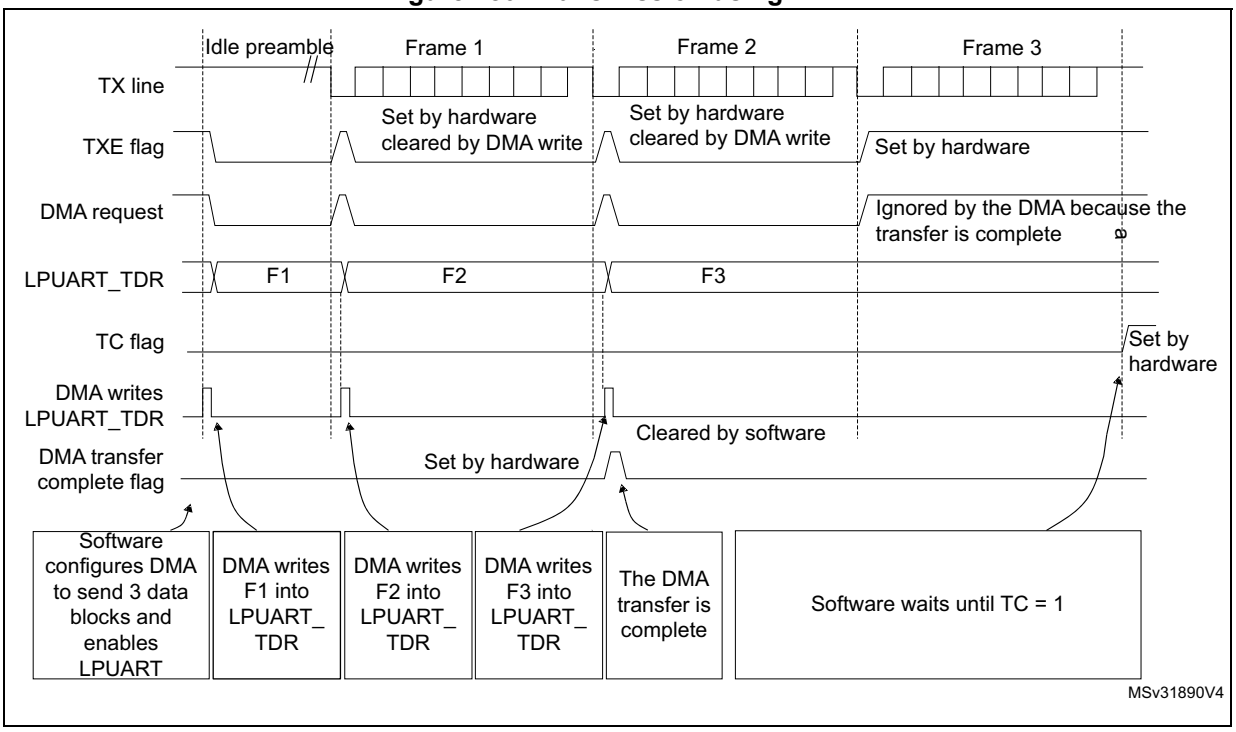

Note: When FIFO management is enabled, the DMA request is triggered by Transmit FIFO not full (i.e. TXFNF = 1).

Reception using DMA

DMA mode can be enabled for reception by setting the DMAR bit in LPUART_CR3 register. Data are loaded from the LPUART_RDR register to a SRAM area configured using the DMA peripheral (refer to the corresponding *Direct memory access controller (DMA)* section) whenever a data byte is received. To map a DMA channel for LPUART reception, use the following procedure:

1. Write the LPUART_RDR register address in the DMA control register to configure it as the source of the transfer. The data is moved from this address to the memory after each RXNE (RXFNE in case FIFO mode is enabled) event.
2. Write the memory address in the DMA control register to configure it as the destination of the transfer. The data is loaded from LPUART_RDR to this memory area after each RXNE (RXFNE in case FIFO mode is enabled) event.
3. Configure the total number of bytes to be transferred to the DMA control register.
4. Configure the channel priority in the DMA control register
5. Configure interrupt generation after half/ full transfer as required by the application.
6. Activate the channel in the DMA control register.

When the number of data transfers programmed in the DMA Controller is reached, the DMA controller generates an interrupt on the DMA channel interrupt vector.

Figure 281. Reception using DMA

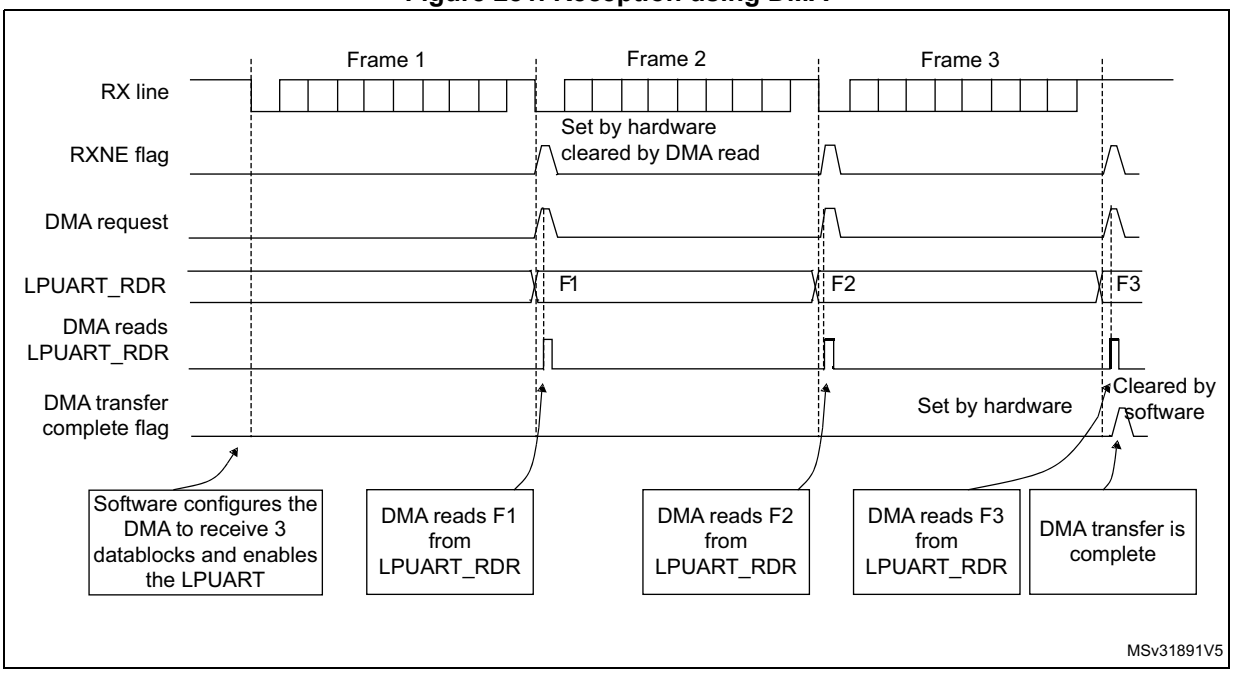

Note: When FIFO management is enabled, the DMA request is triggered by Receive FIFO not empty (i.e. RXFNE = 1).

Error flagging and interrupt generation in multibuffer communication

If any error occurs during a transaction In multibuffer communication mode, the error flag is asserted after the current byte. An interrupt is generated if the interrupt enable flag is set. For framing error, overrun error and noise flag which are asserted with RXNE (RXFNE in case FIFO mode is enabled) in single byte reception, there is a separate error flag interrupt

enable bit (EIE bit in the LPUART_CR3 register), which, if set, enables an interrupt after the current byte if any of these errors occur.

29.4.13 RS232 hardware flow control and RS485 Driver Enable

It is possible to control the serial data flow between 2 devices by using the CTS input and the RTS output. The *Figure 268* shows how to connect 2 devices in this mode:

Figure 282. Hardware flow control between 2 LPUARTs

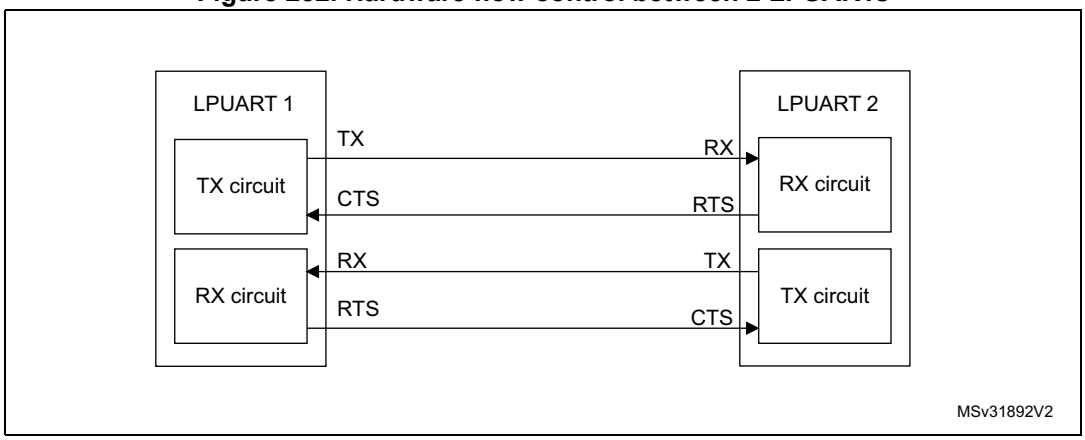

RS232 RTS and CTS flow control can be enabled independently by writing the RTSE and CTSE bits respectively to 1 (in the LPUART_CR3 register).

RS232 RTS flow control

If the RTS flow control is enabled (RTSE = 1), then RTS is deasserted (tied low) as long as the LPUART receiver is ready to receive a new data. When the receive register is full, RTS is asserted, indicating that the transmission is expected to stop at the end of the current frame. *Figure 283* shows an example of communication with RTS flow control enabled.

Figure 283. RS232 RTS flow control

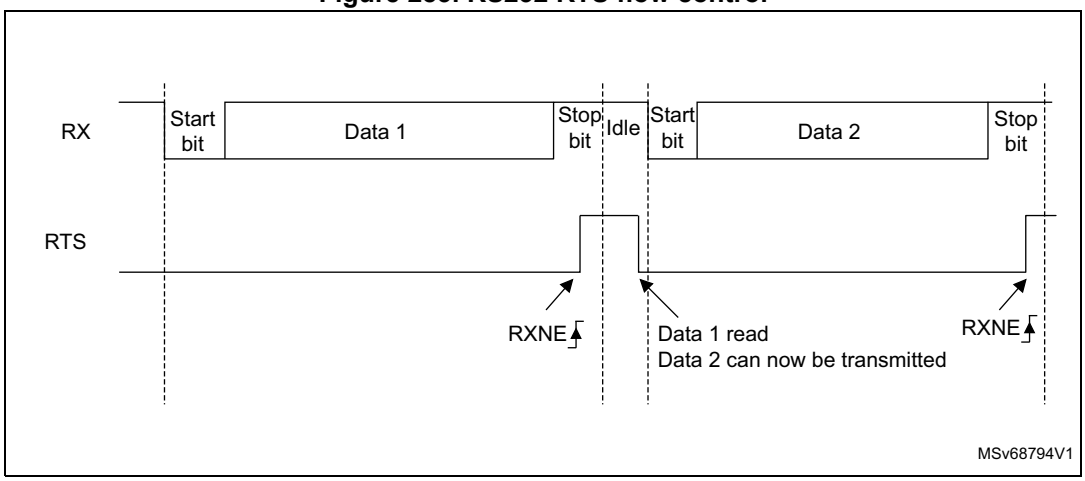

Note: When FIFO mode is enabled, RTS is asserted only when RXFIFO is full.

RS232 CTS flow control

If the CTS flow control is enabled (CTSE = 1), then the transmitter checks the CTS input before transmitting the next frame. If CTS is deasserted (tied low), then the next data is transmitted (assuming that data is to be transmitted, in other words, if TXE/TXFE = 0), else the transmission does not occur. When CTS is asserted during a transmission, the current transmission is completed before the transmitter stops.

When CTSE = 1, the CTSIF status bit is automatically set by hardware as soon as the CTS input toggles. It indicates when the receiver becomes ready or not ready for communication. An interrupt is generated if the CTSIE bit in the LPUART_CR3 register is set. *Figure 284* shows an example of communication with CTS flow control enabled.

Figure 284. RS232 CTS flow control

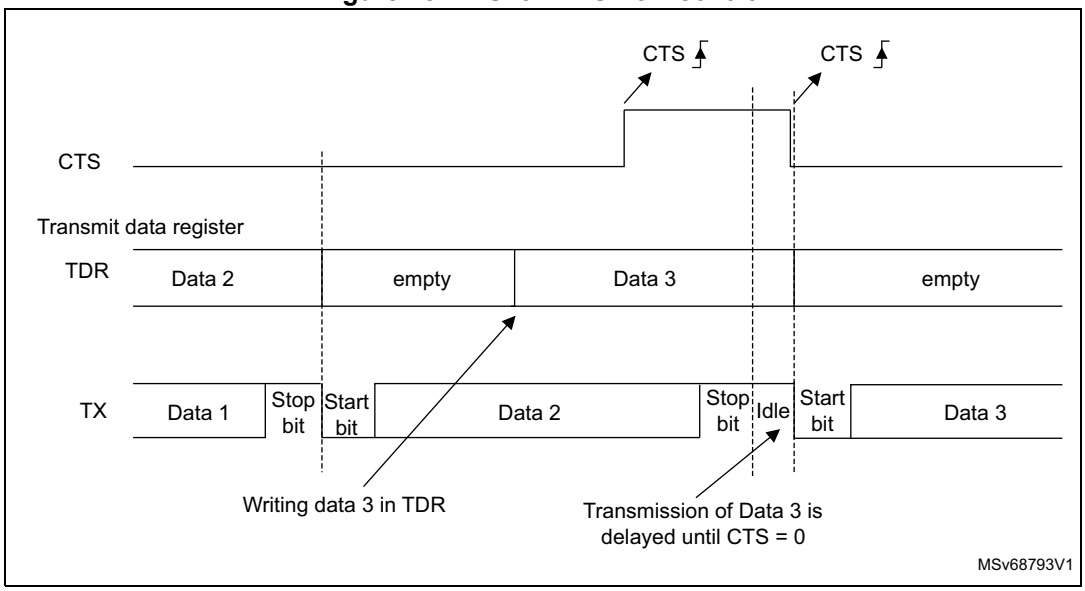

Note: For correct behavior, CTS must be deasserted at least 3 LPUART clock source periods before the end of the current character. In addition it should be noted that the CTSCF flag may not be set for pulses shorter than 2 x PCLK periods.

RS485 driver enable

The driver enable feature is enabled by setting bit DEM in the LPUART_CR3 control register. This enables activating the external transceiver control, through the DE (Driver Enable) signal. The assertion time is the time between the activation of the DE signal and the beginning of the start bit. It is programmed using the DEAT [4:0] bitfields in the LPUART_CR1 control register. The deassertion time is the time between the end of the last stop bit, in a transmitted message, and the de-activation of the DE signal. It is programmed using the DEDT [4:0] bitfields in the LPUART_CR1 control register. The polarity of the DE signal can be configured using the DEP bit in the LPUART_CR3 control register.

The LPUART DEAT and DEDT are expressed in LPUART clock source (f_{CK}) cycles:

- The Driver enable assertion time equals
  - (1 + (DEAT x P)) x f_{CK}, if P # 0
  - (1 + DEAT) x f_{CK} , if P = 0
- The Driver enable deassertion time equals
  - (1 + (DEDT x P)) x f_{CK}, if P # 0
  - (1 + DEDT) x f_{CK}, if P = 0

where P = BRR[20:11]

29.4.14 LPUART low-power management

The LPUART has advanced low-power mode functions that enable it to transfer properly data even when the lpuart_pclk clock is disabled.
The LPUART is able to wake up the MCU from low-power mode when the UESM bit is set.
When the lpuart_pclk is gated, the LPUART provides a wake-up interrupt (lpuart_wkup) if a specific action requiring the activation of the lpuart_pclk clock is needed:

- If FIFO mode is disabled

  luart_pclk clock has to be activated to empty the LPUART data register.

  In this case, the lpuart_wkup interrupt source is the RXNE set to ‘1’. The RXNEIE bit must be set before entering low-power mode.
- If FIFO mode is enabled

  luart_pclk clock has to be activated
  - to fill the TXFIFO
  - or to empty the RXFIFO

  In this case, the lpuart_wkup interrupt source can be:
  - RXFIFO not empty. In this case, the RXFNEIE bit must be set before entering low-power mode.
  - RXFIFO full. In this case, the RXFFIE bit must be set before entering low-power mode, the number of received data corresponds to the RXFIFO size, and the RXFF flag is not set .
  - TXFIFO empty. In this case, the TXFEIE bit must be set before entering low-power mode.

  This enables sending/receiving the data in the TXFIFO/RXFIFO during low-power mode.

  To avoid overrun/underrun errors and transmit/receive data in low-power mode, the lpuart_wkup interrupt source can be one of the following events:
  - TXFIFO threshold reached. In this case, the TXFTIE bit must be set before entering low-power mode.
  - RXFIFO threshold reached. In this case, the RXFTIE bit must be set before entering low-power mode.

  For example, the application can set the threshold to the maximum RXFIFO size if the wake-up time is less than the time to receive a single byte across the line.

  Using the RXFIFO full, TXFIFO empty, RXFIFO not empty and RXFIFO/TXFIFO threshold interrupts to wake up the MCU from low-power mode enables doing as many LPUART transfers as possible during low-power mode with the benefit of optimizing consumption.

Alternatively, a specific lpuart_wkup interrupt may be selected through the WUS bitfields.

When the wake-up event is detected, the WUF flag is set by hardware and lpuart_wkup interrupt is generated if the WUFIE bit is set.

Note: Before entering low-power mode, make sure that no LPUART transfer is ongoing. Checking the BUSY flag cannot ensure that low-power mode is never entered when data reception is ongoing.

The WUF flag is set when a wake-up event is detected, independently of whether the MCU is in low-power or in an active mode.

When entering low-power mode just after having initialized and enabled the receiver, the REACK bit must be checked to ensure the LPUART is actually enabled.

When DMA is used for reception, it must be disabled before entering low-power mode and re-enabled upon exit from low-power mode.

When FIFO is enabled, the wake-up from low-power mode on address match is only possible when mute mode is enabled.

Using mute mode with low-power mode

If the LPUART is put into mute mode before entering low-power mode:

- Wake-up from mute mode on idle detection must not be used, because idle detection cannot work in low-power mode.
- If the wake-up from mute mode on address match is used, then the low-power mode wake-up source from must also be the address match. If the RXNE flag was set when entering the low-power mode, the interface remains in mute mode upon address match and wake up from low-power mode.

Note: When FIFO management is enabled, mute mode is used with wake-up from low-power mode without any constraints (i.e.the two points mentioned above about mute and low-power mode are valid only when FIFO management is disabled).

Wake-up from low-power mode when LPUART kernel clock lpuart_ker_ck is OFF in low-power mode

If during low-power mode, the lpuart_ker_ck clock is switched OFF, when a falling edge on the LPUART receive line is detected, the LPUART interface requests the lpuart_ker_ck clock to be switched ON thanks to the lpuart_ker_ck_req signal. The lpuart_ker_ck is then used for the frame reception.

If the wake-up event is verified, the MCU wakes up from low-power mode and data reception goes on normally.

If the wake-up event is not verified, the lpuart_ker_ck is switched OFF again, the MCU is not waken up and stays in low-power mode and the kernel clock request is released.

The example below shows the case of wake-up event programmed to “address match detection” and FIFO management disabled.

Figure 285 shows the behavior when the wake-up event is verified.

Figure 285. Wake-up event verified (wake-up event = address match, FIFO disabled)

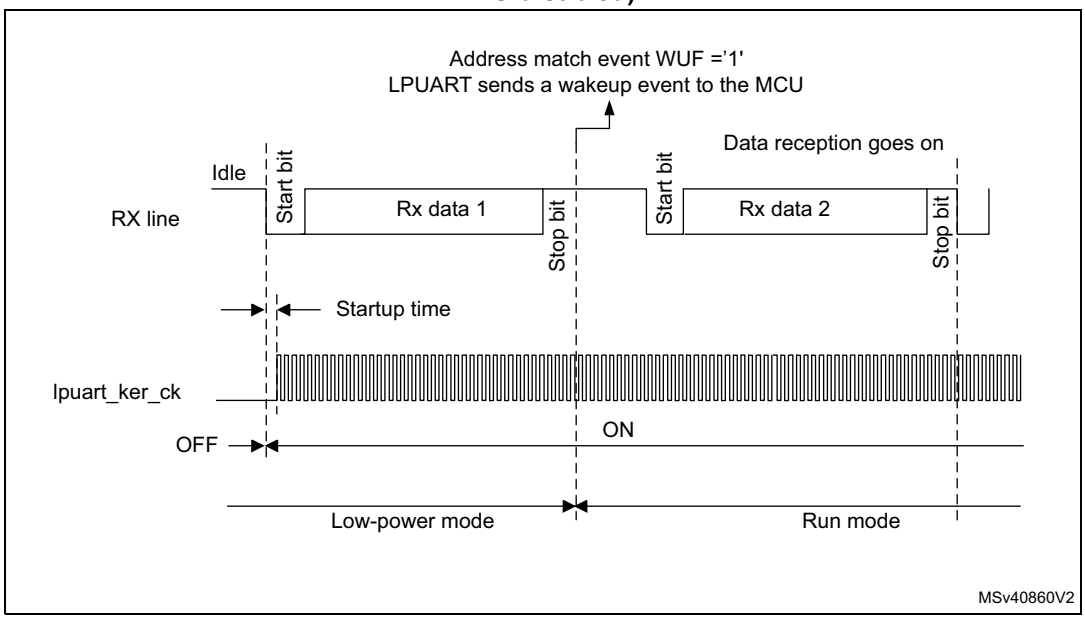

Figure 286 shows the behavior when the wake-up event is not verified.

Figure 286. Wake-up event not verified (wake-up event = address match, FIFO disabled)

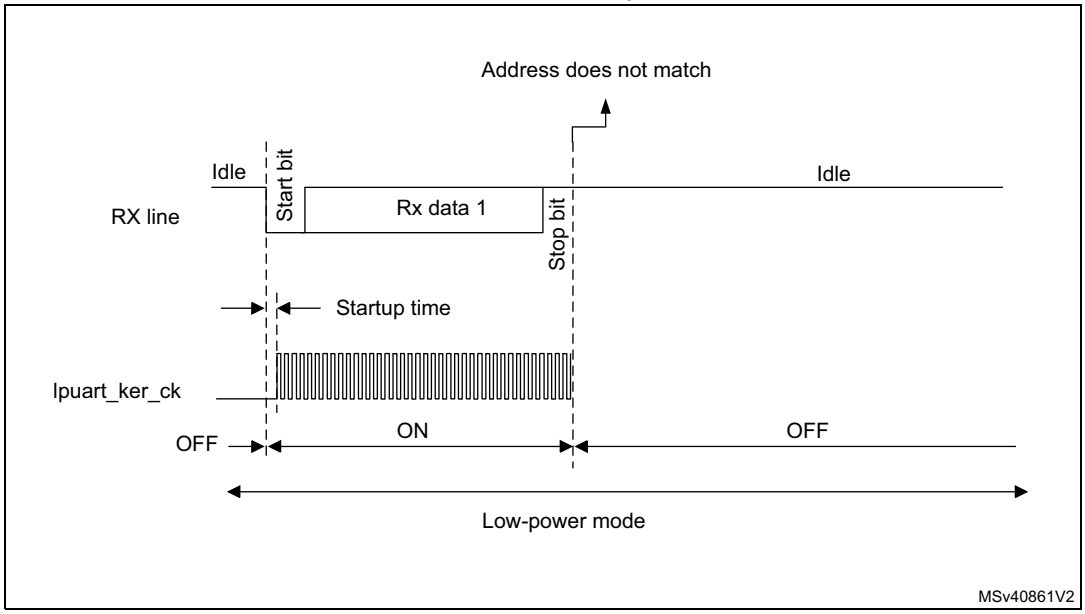

Note: The above figures are valid when address match or any received frame is used as wake-up event. In the case the wake-up event is the start bit detection, the LPUART sends the wake-up event to the MCU at the end of the start bit.

Determining the maximum LPUART baud rate that enables to correctly wake up the MCU from low-power mode

The maximum baud rate that enables to correctly wake up the MCU from low-power mode depends on the wake-up time parameter (refer to the device datasheet) and on the LPUART receiver tolerance (see *Section 29.4.8: Tolerance of the LPUART receiver to clock deviation*).

Let us take the example of OVER8 = 0, M bits = '01', ONEBIT = 0 and BRR [3:0] = 0000.

In these conditions, according to *Table 189: Tolerance of the LPUART receiver*, the LPUART receiver tolerance equals 3.41%.

DTRA + DQUANT + DREC + DTCL + DWU < LPUART receiver tolerance

$D_{WUmax} = t_{WULPUART} / (11 \times T_{bit\ Min})$

$T_{bit\ Min} = t_{WULPUART} / (11 \times D_{WUmax})$

where $t_{WULPUART}$ is the wake-up time from low-power mode.

If we consider the ideal case where DTRA, DQUANT, DREC and DTCL parameters are at 0%, the maximum value of DWU is 3.41%. In reality, we need to consider at least the lpuart_ker_ck inaccuracy.

For example, if HSI is used as lpuart_ker_ck, and the HSI inaccuracy is of 1%, then we obtain:

$t_{WULPUART}$ = 3 µs (values provided only as examples; for correct values, refer to the device datasheet).

D_{WUmax} = 3.41% - 1% = 2.41%

$T_{bit\ min}$ = 3 µs/ (11 x 2.41%) = 11.32 µs.

As a result, the maximum baud rate that enables to wake up correctly from low-power mode is: 1/11.32 µs = 88.36 kbaud.

29.5 LPUART in low-power modes

Table 191. Effect of low-power modes on the LPUART

Mode	Description
Sleep	No effect. LPUART interrupts cause the device to exit Sleep mode.
Stop(1)	The content of the LPUART registers is kept. The LPUART is able to wake up the microcontroller from Stop mode when the LPUART is clocked by an oscillator available in Stop mode.
Standby	The LPUART peripheral is powered down and must be reinitialized after exiting Standby mode.

1. Refer to *Section 29.3: LPUART implementation* to know if the wake-up from Stop mode is supported for a given peripheral instance. If an instance is not functional in a given Stop mode, it must be disabled before entering this Stop mode.

29.6 LPUART interrupts

Refer to *Table 192* for a detailed description of all LPUART interrupt requests.

Table 192. LPUART interrupt requests

Interrupt vector	Interrupt event	Event flag	Enable Control bit	Interrupt clear method	Exit from Sleep mode	Exit from Stop[1] modes	Exit from Standby mode
LPUART	Transmit data register empty	TXE	TXEIE	Write TDR	Yes	No	No
	Transmit FIFO Not Full	TXFNF	TXFNFIE	TXFIFO full		No	
	Transmit FIFO Empty	TXFE	TXFEIE	Write TDR or write 1 in TXFRQ		Yes	
	Transmit FIFO threshold reached	TXFT	TXFTIE	Write TDR		Yes	
	CTS interrupt	CTSIF	CTSIE	Write 1 in CTSCF		No	
	Transmission Complete	TC	TCIE	Write TDR or write 1 in TCCF		No	
	Receive data register not empty (data ready to be read)	RXNE	RXNEIE	Read RDR or write 1 in RXFRQ	Yes	Yes	
	Receive FIFO Not Empty	RXFNE	RXFNEIE	Read RDR until RXFIFO empty or write 1 in RXFRQ		Yes	
	Receive FIFO Full	RXFF[2]	RXFFIE	Read RDR		Yes	
	Receive FIFO threshold reached	RXFT	RXFTIE	Read RDR		Yes	
	Overrun error detected	ORE	RX-NEIE/RX FNEIE	Write 1 in ORECF		No	
	Idle line detected	IDLE	IDLEIE	Write 1 in IDLECF		No	
	Parity error	PE	PEIE	Write 1 in PECF		No	
	Noise error in multibuffer communication.	NE	EIE	Write 1 in NFCF		No	
	Overrun error in multibuffer communication.	ORE[3]		Write 1 in ORECF		No	
	Framing Error in multibuffer communication.	FE		Write 1 in FECF		No	
	Character match	CMF	CMIE	Write 1 in CMCF		No	
	Wake-up from low-power mode	WUF	WUFIE	Write 1 in WUC		Yes	

1. The LPUART can wake up the device from Stop mode only if the peripheral instance supports the wake-up from Stop mode feature. Refer to *Section 29.3: LPUART implementation* for the list of supported Stop modes.
2. RXFF flag is asserted if the LPUART receives n+1 data (n being the RXFIFO size): n data in the RXFIFO and 1 data in LPUART_RDR. In Stop mode, LPUART_RDR is not clocked. As a result, this register is not written and once n data are received and written in the RXFIFO, the RXFF interrupt is asserted (RXFF flag is not set).
3. When OVRDIS = 0.

29.7 LPUART registers

Refer to *Section 1.2 on page 50* for a list of abbreviations used in register descriptions.

The peripheral registers have to be accessed by words (32 bits).

29.7.1 LPUART control register 1 (LPUART_CR1)

Address offset: 0x00

Reset value: 0x0000 0000

The same register can be used in FIFO mode enabled (this section) and FIFO mode disabled (next section).

FIFO mode enabled

31	30	29	28	27	26	25	24	23	22	21	20	19	18	17	16
RXFFIE	TXFEIE	FIFOEN	M1	Res.	Res.	DEAT[4:0]					DEDT[4:0]				
rw	rw	rw	rw			rw	rw	rw	rw	rw	rw	rw	rw	rw	rw

15	14	13	12	11	10	9	8	7	6	5	4	3	2	1	0
Res.	CMIE	MME	M0	WAKE	PCE	PS	PEIE	TXFNFIE	TCIE	RXFNEIE	IDLEIE	TE	RE	UESM	UE
	rw	rw	rw	rw	rw	rw	rw	rw	rw	rw	rw	rw	rw	rw	rw

Bit 31 **RXFFIE:**RXFIFO full interrupt enable
This bit is set and cleared by software.
0: Interrupt is inhibited
1: An LPUART interrupt is generated when RXFF = 1 in the LPUART_ISR register

Bit 30 **TXFEIE:**TXFIFO empty interrupt enable
This bit is set and cleared by software.
0: Interrupt is inhibited
1: An LPUART interrupt is generated when TXFE = 1 in the LPUART_ISR register

Bit 29 **FIFOEN:**FIFO mode enable
This bit is set and cleared by software.
0: FIFO mode is disabled.
1: FIFO mode is enabled.

Bit 28 **M1**: Word length

This bit must be used in conjunction with bit 12 (M0) to determine the word length. It is set or cleared by software.

M[1:0] = ‘00’: 1 Start bit, 8 Data bits, n Stop bit

M[1:0] = ‘01’: 1 Start bit, 9 Data bits, n Stop bit

M[1:0] = ‘10’: 1 Start bit, 7 Data bits, n Stop bit

This bit can only be written when the LPUART is disabled (UE = 0).

Note: In 7-bit data length mode, the smartcard mode, LIN master mode and Auto baud rate (0x7F and 0x55 frames detection) are not supported.

Bits 27:26 Reserved, must be kept at reset value.

Bits 25:21 **DEAT[4:0]**: Driver enable assertion time

This 5-bit value defines the time between the activation of the DE (Driver Enable) signal and the beginning of the start bit. It is expressed in lpuart_ker_ck clock cycles. For more details, refer *Section 28.5.20: RS232 hardware flow control and RS485 Driver Enable*.

This bitfield can only be written when the LPUART is disabled (UE = 0).

Bits 20:16 **DEDT[4:0]**: Driver enable deassertion time

This 5-bit value defines the time between the end of the last stop bit, in a transmitted message, and the de-activation of the DE (Driver Enable) signal.It is expressed in lpuart_ker_ck clock cycles. For more details, refer *Section 29.4.13: RS232 hardware flow control and RS485 Driver Enable*.

If the LPUART_TDR register is written during the DEDT time, the new data is transmitted only when the DEDT and DEAT times have both elapsed.

This bitfield can only be written when the LPUART is disabled (UE = 0).

Bit 15 Reserved, must be kept at reset value.

Bit 14 **CMIE**: Character match interrupt enable

This bit is set and cleared by software.

0: Interrupt is inhibited

1: A LPUART interrupt is generated when the CMF bit is set in the LPUART_ISR register.

Bit 13 **MME**: Mute mode enable

This bit activates the mute mode function of the LPUART. When set, the LPUART can switch between the active and mute modes, as defined by the WAKE bit. It is set and cleared by software.

0: Receiver in active mode permanently

1: Receiver can switch between mute mode and active mode.

Bit 12 **M0**: Word length

This bit is used in conjunction with bit 28 (M1) to determine the word length. It is set or cleared by software (refer to bit 28 (M1) description).

This bit can only be written when the LPUART is disabled (UE = 0).

Bit 11 **WAKE**: Receiver wake-up method

This bit determines the LPUART wake-up method from mute mode. It is set or cleared by software.

0: Idle line

1: Address mark

This bitfield can only be written when the LPUART is disabled (UE = 0).

Bit 10 **PCE**: Parity control enable

This bit selects the hardware parity control (generation and detection). When the parity control is enabled, the computed parity is inserted at the MSB position (9th bit if M = 1; 8th bit if M = 0) and parity is checked on the received data. This bit is set and cleared by software. Once it is set, PCE is active after the current byte (in reception and in transmission).

0: Parity control disabled

1: Parity control enabled

This bitfield can only be written when the LPUART is disabled (UE = 0).

Bit 9 **PS**: Parity selection

This bit selects the odd or even parity when the parity generation/detection is enabled (PCE bit set). It is set and cleared by software. The parity is selected after the current byte.

0: Even parity

1: Odd parity

This bitfield can only be written when the LPUART is disabled (UE = 0).

Bit 8 **PEIE**: PE interrupt enable

This bit is set and cleared by software.

0: Interrupt is inhibited

1: An LPUART interrupt is generated whenever PE = 1 in the LPUART_ISR register

Bit 7 **TXFNFIE**: TXFIFO not full interrupt enable

This bit is set and cleared by software.

0: Interrupt is inhibited

1: A LPUART interrupt is generated whenever TXE/TXFNF =1 in the LPUART_ISR register

Bit 6 **TCIE**: Transmission complete interrupt enable

This bit is set and cleared by software.

0: Interrupt is inhibited

1: An LPUART interrupt is generated whenever TC = 1 in the LPUART_ISR register

Bit 5 **RXFNEIE**: RXFIFO not empty interrupt enable

This bit is set and cleared by software.

0: Interrupt is inhibited

1: A LPUART interrupt is generated whenever ORE = 1 or RXNE/RXFNE = 1 in the LPUART_ISR register

Bit 4 **IDLEIE**: IDLE interrupt enable

This bit is set and cleared by software.

0: Interrupt is inhibited

1: An LPUART interrupt is generated whenever IDLE = 1 in the LPUART_ISR register

Bit 3 **TE**: Transmitter enable

This bit enables the transmitter. It is set and cleared by software.

0: Transmitter is disabled

1: Transmitter is enabled

Note: During transmission, a low pulse on the TE bit ("0" followed by "1") sends a preamble (idle line) after the current word. In order to generate an idle character, the TE must not be immediately written to 1. In order to ensure the required duration, the software can poll the TEACK bit in the LPUART_ISR register.

When TE is set there is a 1 bit-time delay before the transmission starts.

Bit 2 **RE**: Receiver enable

This bit enables the receiver. It is set and cleared by software.

0: Receiver is disabled

1: Receiver is enabled and begins searching for a start bit

Bit 1 **UESM**: LPUART enable in Stop mode

When this bit is cleared, the LPUART is not able to wake up the MCU from low-power mode.

When this bit is set, the LPUART is able to wake up the MCU from low-power mode, provided that the LPUART clock selection is HSI or LSE in the RCC.

This bit is set and cleared by software.

0: LPUART not able to wake up the MCU from low-power mode.

1: LPUART able to wake up the MCU from low-power mode. When this function is active, the clock source for the LPUART must be HSI or LSE (see RCC chapter)

Note: It is recommended to set the UESM bit just before entering low-power mode and clear it on exit from low-power mode.

Bit 0 **UE**: LPUART enable

When this bit is cleared, the LPUART prescalers and outputs are stopped immediately, and current operations are discarded. The configuration of the LPUART is kept, but all the status flags, in the LPUART_ISR are reset. This bit is set and cleared by software.

0: LPUART prescaler and outputs disabled, low-power mode

1: LPUART enabled

Note: To enter low-power mode without generating errors on the line, the TE bit must be reset before and the software must wait for the TC bit in the LPUART_ISR to be set before resetting the UE bit.

The DMA requests are also reset when UE = 0 so the DMA channel must be disabled before resetting the UE bit.

29.7.2 LPUART control register 1 [alternate] (LPUART_CR1)

Address offset: 0x00

Reset value: 0x0000 0000

The same register can be used in FIFO mode enabled (previous section) and FIFO mode disabled (this section).

FIFO mode disabled

31	30	29	28	27	26	25	24	23	22	21	20	19	18	17	16
Res.	Res.	FIFO EN	M1	Res.	Res.	DEAT[4:0]					DEDT[4:0]				
		rw	rw			rw	rw	rw	rw	rw	rw	rw	rw	rw	rw

15	14	13	12	11	10	9	8	7	6	5	4	3	2	1	0
Res.	CMIE	MME	M0	WAKE	PCE	PS	PEIE	TXEIE	TCIE	RXNEIE	IDLEIE	TE	RE	UESM	UE
	rw	rw	rw	rw	rw	rw	rw	rw	rw	rw	rw	rw	rw	rw	rw

Bits 31:30 Reserved, must be kept at reset value.

Bit 29 **FIFOEN:**FIFO mode enable

This bit is set and cleared by software.

0: FIFO mode is disabled.

1: FIFO mode is enabled.

Bit 28 **M1**: Word length

This bit must be used in conjunction with bit 12 (M0) to determine the word length. It is set or cleared by software.

M[1:0] = ‘00’: 1 Start bit, 8 Data bits, n Stop bit

M[1:0] = ‘01’: 1 Start bit, 9 Data bits, n Stop bit

M[1:0] = ‘10’: 1 Start bit, 7 Data bits, n Stop bit

This bit can only be written when the LPUART is disabled (UE = 0).

Note: In 7-bit data length mode, the smartcard mode, LIN master mode and Auto baud rate (0x7F and 0x55 frames detection) are not supported.

Bits 27:26 Reserved, must be kept at reset value.

Bits 25:21 **DEAT[4:0]**: Driver enable assertion time

This 5-bit value defines the time between the activation of the DE (Driver Enable) signal and the beginning of the start bit. It is expressed in lpuart_ker_ck clock cycles. For more details, refer *Section 28.5.20: RS232 hardware flow control and RS485 Driver Enable*.

This bitfield can only be written when the LPUART is disabled (UE = 0).

Bits 20:16 **DEDT[4:0]**: Driver enable deassertion time

This 5-bit value defines the time between the end of the last stop bit, in a transmitted message, and the de-activation of the DE (Driver Enable) signal.It is expressed in lpuart_ker_ck clock cycles. For more details, refer *Section 29.4.13: RS232 hardware flow control and RS485 Driver Enable*.

If the LPUART_TDR register is written during the DEDT time, the new data is transmitted only when the DEDT and DEAT times have both elapsed.

This bitfield can only be written when the LPUART is disabled (UE = 0).

Bit 15 Reserved, must be kept at reset value.

Bit 14 **CMIE**: Character match interrupt enable

This bit is set and cleared by software.

0: Interrupt is inhibited

1: A LPUART interrupt is generated when the CMF bit is set in the LPUART_ISR register.

Bit 13 **MME**: Mute mode enable

This bit activates the mute mode function of the LPUART. When set, the LPUART can switch between the active and mute modes, as defined by the WAKE bit. It is set and cleared by software.

0: Receiver in active mode permanently

1: Receiver can switch between mute mode and active mode.

Bit 12 **M0**: Word length

This bit is used in conjunction with bit 28 (M1) to determine the word length. It is set or cleared by software (refer to bit 28 (M1) description).

This bit can only be written when the LPUART is disabled (UE = 0).

Bit 11 **WAKE**: Receiver wake-up method

This bit determines the LPUART wake-up method from mute mode. It is set or cleared by software.

0: Idle line

1: Address mark

This bitfield can only be written when the LPUART is disabled (UE = 0).

Bit 10 **PCE**: Parity control enable

This bit selects the hardware parity control (generation and detection). When the parity control is enabled, the computed parity is inserted at the MSB position (9th bit if M = 1; 8th bit if M = 0) and parity is checked on the received data. This bit is set and cleared by software. Once it is set, PCE is active after the current byte (in reception and in transmission).

0: Parity control disabled

1: Parity control enabled

This bitfield can only be written when the LPUART is disabled (UE = 0).

Bit 9 **PS**: Parity selection

This bit selects the odd or even parity when the parity generation/detection is enabled (PCE bit set). It is set and cleared by software. The parity is selected after the current byte.

0: Even parity

1: Odd parity

This bitfield can only be written when the LPUART is disabled (UE = 0).

Bit 8 **PEIE**: PE interrupt enable

This bit is set and cleared by software.

0: Interrupt is inhibited

1: An LPUART interrupt is generated whenever PE = 1 in the LPUART_ISR register

Bit 7 **TXEIE**: Transmit data register empty

This bit is set and cleared by software.

0: Interrupt is inhibited

1: A LPUART interrupt is generated whenever TXE/TXFNF =1 in the LPUART_ISR register

Bit 6 **TCIE**: Transmission complete interrupt enable

This bit is set and cleared by software.

0: Interrupt is inhibited

1: An LPUART interrupt is generated whenever TC = 1 in the LPUART_ISR register

Bit 5 **RXNEIE**: Receive data register not empty

This bit is set and cleared by software.

0: Interrupt is inhibited

1: A LPUART interrupt is generated whenever ORE = 1 or RXNE/RXFNE = 1 in the LPUART_ISR register

Bit 4 **IDLEIE**: IDLE interrupt enable

This bit is set and cleared by software.

0: Interrupt is inhibited

1: An LPUART interrupt is generated whenever IDLE = 1 in the LPUART_ISR register

Bit 3 **TE**: Transmitter enable

This bit enables the transmitter. It is set and cleared by software.

0: Transmitter is disabled

1: Transmitter is enabled

Note: During transmission, a low pulse on the TE bit ("0" followed by "1") sends a preamble (idle line) after the current word. In order to generate an idle character, the TE must not be immediately written to 1. In order to ensure the required duration, the software can poll the TEACK bit in the LPUART_ISR register.

When TE is set there is a 1 bit-time delay before the transmission starts.

Bit 2 **RE**: Receiver enable

This bit enables the receiver. It is set and cleared by software.

0: Receiver is disabled

1: Receiver is enabled and begins searching for a start bit

Bit 1 **UESM**: LPUART enable in Stop mode

When this bit is cleared, the LPUART is not able to wake up the MCU from low-power mode.

When this bit is set, the LPUART is able to wake up the MCU from low-power mode, provided that the LPUART clock selection is HSI or LSE in the RCC.

This bit is set and cleared by software.

0: LPUART not able to wake up the MCU from low-power mode.

1: LPUART able to wake up the MCU from low-power mode. When this function is active, the clock source for the LPUART must be HSI or LSE (see RCC chapter)

Note: It is recommended to set the UESM bit just before entering low-power mode and clear it on exit from low-power mode.

Bit 0 **UE**: LPUART enable

When this bit is cleared, the LPUART prescalers and outputs are stopped immediately, and current operations are discarded. The configuration of the LPUART is kept, but all the status flags, in the LPUART_ISR are reset. This bit is set and cleared by software.

0: LPUART prescaler and outputs disabled, low-power mode

1: LPUART enabled

Note: To enter low-power mode without generating errors on the line, the TE bit must be reset before and the software must wait for the TC bit in the LPUART_ISR to be set before resetting the UE bit.

The DMA requests are also reset when UE = 0 so the DMA channel must be disabled before resetting the UE bit.

29.7.3 LPUART control register 2 (LPUART_CR2)

Address offset: 0x04

Reset value: 0x0000 0000

31	30	29	28	27	26	25	24	23	22	21	20	19	18	17	16
ADD[7:0]								Res.	Res.	Res.	Res.	MSBFIRST	DATAINV	TXINV	RXINV
rw	rw	rw	rw	rw	rw	rw	rw					rw	rw	rw	rw

15	14	13	12	11	10	9	8	7	6	5	4	3	2	1	0
SWAP	Res.	STOP[1:0]		Res.	Res.	Res.	Res.	Res.	Res.	Res.	ADDM7	Res.	Res.	Res.	Res.
rw		rw	rw								rw				

Bits 31:24 **ADD[7:0]**: Address of the LPUART node

These bits give the address of the LPUART node in mute mode or a character code to be recognized in low-power or Run mode:

- In mute mode: they are used in multiprocessor communication to wake up from mute mode with 4-bit/7-bit address mark detection. The MSB of the character sent by the transmitter should be equal to 1. In 4-bit address mark detection, only ADD[3:0] bits are used.
- In low-power mode: they are used for wake up from low-power mode on character match. When WUS[1:0] is programmed to 0b00 (WUF active on address match), the wake-up from low-power mode is performed when the received character corresponds to the character programmed through ADD[6:0] or ADD[3:0] bitfield (depending on ADDM7 bit), and WUF interrupt is enabled by setting WUFIE bit. The MSB of the character sent by transmitter should be equal to 1.
- In Run mode with mute mode inactive (for example, end-of-block detection in ModBus protocol): the whole received character (8 bits) is compared to ADD[7:0] value and CMF flag is set on match. An interrupt is generated if the CMIE bit is set.

These bits can only be written when the reception is disabled (RE = 0) or when the USART is disabled (UE = 0).

Bits 23:20 Reserved, must be kept at reset value.

Bit 19 **MSBFIRST**: Most significant bit first

This bit is set and cleared by software.
0: data is transmitted/received with data bit 0 first, following the start bit.
1: data is transmitted/received with the MSB (bit 7/8) first, following the start bit.
This bitfield can only be written when the LPUART is disabled (UE = 0).

Bit 18 **DATAINV:** Binary data inversion

This bit is set and cleared by software.
0: Logical data from the data register are send/received in positive/direct logic. (1 = H, 0 = L)
1: Logical data from the data register are send/received in negative/inverse logic. (1 = L, 0 = H). The parity bit is also inverted.
This bitfield can only be written when the LPUART is disabled (UE = 0).

Bit 17 **TXINV:** TX pin active level inversion

This bit is set and cleared by software.
0: TX pin signal works using the standard logic levels (V_{DD} = 1/idle, Gnd = 0/mark)
1: TX pin signal values are inverted (V_{DD} = 0/mark, Gnd = 1/idle).
This enables the use of an external inverter on the TX line.
This bitfield can only be written when the LPUART is disabled (UE = 0).

Bit 16 **RXINV:** RX pin active level inversion

This bit is set and cleared by software.
0: RX pin signal works using the standard logic levels (V_{DD} = 1/idle, Gnd = 0/mark)
1: RX pin signal values are inverted (V_{DD} = 0/mark, Gnd = 1/idle).
This enables the use of an external inverter on the RX line.
This bitfield can only be written when the LPUART is disabled (UE = 0).

Bit 15 **SWAP:** Swap TX/RX pins

This bit is set and cleared by software.
0: TX/RX pins are used as defined in standard pinout
1: The TX and RX pins functions are swapped. This enables to work in the case of a cross-wired connection to another UART.
This bitfield can only be written when the LPUART is disabled (UE = 0).

Bit 14 Reserved, must be kept at reset value.

Bits 13:12 **STOP[1:0]**: STOP bits
These bits are used for programming the stop bits.
00: 1 stop bit
01: Reserved.
10: 2 stop bits
11: Reserved
This bitfield can only be written when the LPUART is disabled (UE = 0).

Bits 11:5 Reserved, must be kept at reset value.

Bit 4 **ADDM7**:7-bit address detection/4-bit address detection
This bit is for selection between 4-bit address detection or 7-bit address detection.
0: 4-bit address detection
1: 7-bit address detection (in 8-bit data mode)
This bit can only be written when the LPUART is disabled (UE = 0)

Note: In 7-bit and 9-bit data modes, the address detection is done on 6-bit and 8-bit address (ADD[5:0] and ADD[7:0]) respectively.

Bits 3:0 Reserved, must be kept at reset value.

29.7.4 LPUART control register 3 (LPUART_CR3)

Address offset: 0x08

Reset value: 0x0000 0000

31	30	29	28	27	26	25	24	23	22	21	20	19	18	17	16
TXFTCFG[2:0]			RXFTIE	RXFTCFG[2:0]			Res.	TXFTIE	WUFIE	WUS[1:0]		Res.	Res.	Res.	Res.
rw	rw	rw	rw	rw	rw	rw		rw	rw	rw	rw				

15	14	13	12	11	10	9	8	7	6	5	4	3	2	1	0
DEP	DEM	DDRE	OVRDIS	Res.	CTSIE	CTSE	RTSE	DMAT	DMAR	Res.	Res.	HDSEL	Res.	Res.	EIE
rw	rw	rw	rw		rw	rw	rw	rw	rw			rw			rw

Bits 31:29 **TXFTCFG[2:0]:** TXFIFO threshold configuration
000:TXFIFO reaches 1/8 of its depth.
001:TXFIFO reaches 1/4 of its depth.
110:TXFIFO reaches 1/2 of its depth.
011:TXFIFO reaches 3/4 of its depth.
100:TXFIFO reaches 7/8 of its depth.
101:TXFIFO becomes empty.
Remaining combinations: Reserved.

Bit 28 **RXFTIE**: RXFIFO threshold interrupt enable
This bit is set and cleared by software.
0: Interrupt is inhibited
1: An LPUART interrupt is generated when Receive FIFO reaches the threshold programmed in RXFTCFG.

Bits 27:25 **RXFTCFG[2:0]:** Receive FIFO threshold configuration

000:Receive FIFO reaches 1/8 of its depth.
001:Receive FIFO reaches 1/4 of its depth.
110:Receive FIFO reaches 1/2 of its depth.
011:Receive FIFO reaches 3/4 of its depth.
100:Receive FIFO reaches 7/8 of its depth.
101:Receive FIFO becomes full.
Remaining combinations: Reserved.

Bit 24 Reserved, must be kept at reset value.

Bit 23 **TXFTIE**: TXFIFO threshold interrupt enable

This bit is set and cleared by software.
0: Interrupt is inhibited
1: A LPUART interrupt is generated when TXFIFO reaches the threshold programmed in TXFTCFG.

Bit 22 **WUFIE**: Wake-up from low-power mode interrupt enable

This bit is set and cleared by software.
0: Interrupt is inhibited
1: An LPUART interrupt is generated whenever WUF = 1 in the LPUART_ISR register

Note: WUFIE must be set before entering in low-power mode.
If the LPUART does not support the wake-up from Stop feature, this bit is reserved and must be kept at reset value. Refer to Section 28.4: USART implementation.

Bits 21:20 **WUS[1:0]**: Wake-up from low-power mode interrupt flag selection

This bitfield specifies the event which activates the WUF (wake-up from low-power mode flag).
00: WUF active on address match (as defined by ADD[7:0] and ADDM7)
01:Reserved.
10: WUF active on Start bit detection
11: WUF active on RXNE.
This bitfield can only be written when the LPUART is disabled (UE = 0).

Note: If the LPUART does not support the wake-up from Stop feature, this bit is reserved and must be kept at reset value. Refer to Section 28.4: USART implementation.

Bits 19:16 Reserved, must be kept at reset value.

Bit 15 **DEP**: Driver enable polarity selection

0: DE signal is active high.
1: DE signal is active low.
This bit can only be written when the LPUART is disabled (UE = 0).

Bit 14 **DEM**: Driver enable mode

This bit enables the user to activate the external transceiver control, through the DE signal.
0: DE function is disabled.
1: DE function is enabled. The DE signal is output on the RTS pin.
This bit can only be written when the LPUART is disabled (UE = 0).

Bit 13 **DDRE**: DMA disable on reception error

0: DMA is not disabled in case of reception error. The corresponding error flag is set but RXNE is kept 0 preventing from overrun. As a consequence, the DMA request is not asserted, so the erroneous data is not transferred (no DMA request), but next correct received data is transferred.

1: DMA is disabled following a reception error. The corresponding error flag is set, as well as RXNE. The DMA request is masked until the error flag is cleared. This means that the software must first disable the DMA request (DMAR = 0) or clear RXNE before clearing the error flag.

This bit can only be written when the LPUART is disabled (UE = 0).

Note: The reception errors are: parity error, framing error or noise error.

Bit 12 **OVRDIS**: Overrun disable

This bit is used to disable the receive overrun detection.

0: Overrun Error Flag, ORE is set when received data is not read before receiving new data.

1: Overrun functionality is disabled. If new data is received while the RXNE flag is still set the ORE flag is not set and the new received data overwrites the previous content of the LPUART_RDR register.

This bit can only be written when the LPUART is disabled (UE = 0).

Note: This control bit enables checking the communication flow w/o reading the data.

Bit 11 Reserved, must be kept at reset value.

Bit 10 **CTSIE**: CTS interrupt enable

0: Interrupt is inhibited

1: An interrupt is generated whenever CTSIF = 1 in the LPUART_ISR register

Bit 9 **CTSE**: CTS enable

0: CTS hardware flow control disabled

1: CTS mode enabled, data is only transmitted when the CTS input is deasserted (tied to 0). If the CTS input is asserted while data is being transmitted, then the transmission is completed before stopping. If data is written into the data register while CTS is asserted, the transmission is postponed until CTS is deasserted.

This bit can only be written when the LPUART is disabled (UE = 0)

Bit 8 **RTSE**: RTS enable

0: RTS hardware flow control disabled

1: RTS output enabled, data is only requested when there is space in the receive buffer. The transmission of data is expected to cease after the current character has been transmitted. The RTS output is deasserted (pulled to 0) when data can be received.

This bit can only be written when the LPUART is disabled (UE = 0).

Bit 7 **DMAT**: DMA enable transmitter

This bit is set/reset by software

1: DMA mode is enabled for transmission

0: DMA mode is disabled for transmission

Bit 6 **DMAR**: DMA enable receiver

This bit is set/reset by software

1: DMA mode is enabled for reception

0: DMA mode is disabled for reception

Bits 5:4 Reserved, must be kept at reset value.

Bit 3 **HDSEL**: Half-duplex selection

Selection of single-wire half-duplex mode
0: Half duplex mode is not selected
1: Half duplex mode is selected
This bit can only be written when the LPUART is disabled (UE = 0).

Bits 2:1 Reserved, must be kept at reset value.

Bit 0 **EIE**: Error interrupt enable

Error Interrupt Enable Bit is required to enable interrupt generation in case of a framing error, overrun error or noise flag (FE = 1 or ORE = 1 or NE = 1 in the LPUART_ISR register).
0: Interrupt is inhibited
1: An interrupt is generated when FE = 1 or ORE = 1 or NE = 1 in the LPUART_ISR register.

29.7.5 LPUART baud rate register (LPUART_BRR)

This register can only be written when the LPUART is disabled (UE = 0). It may be automatically updated by hardware in auto baud rate detection mode.

Address offset: 0x0C

Reset value: 0x0000 0000

31	30	29	28	27	26	25	24	23	22	21	20	19	18	17	16
Res.	Res.	Res.	Res.	Res.	Res.	Res.	Res.	Res.	Res.	Res.	Res.	BRR[19:16]			
												rw	rw	rw	rw

15	14	13	12	11	10	9	8	7	6	5	4	3	2	1	0
BRR[15:0]															
rw	rw	rw	rw	rw	rw	rw	rw	rw	rw	rw	rw	rw	rw	rw	rw

Bits 31:20 Reserved, must be kept at reset value.

Bits 19:0 **BRR[19:0]**: LPUART baud rate

Note: It is forbidden to write values lower than 0x300 in the LPUART_BRR register.

Provided that LPUART_BRR must be ≧ 0x300 and LPUART_BRR is 20 bits, a care should be taken when generating high baud rates using high fck values. fck must be in the range [3 x baud rate..4096 x baud rate].

29.7.6 LPUART request register (LPUART_RQR)

Address offset: 0x18

Reset value: 0x0000 0000

31	30	29	28	27	26	25	24	23	22	21	20	19	18	17	16
Res.	Res.	Res.	Res.	Res.	Res.	Res.	Res.	Res.	Res.	Res.	Res.	Res.	Res.	Res.	Res.

15	14	13	12	11	10	9	8	7	6	5	4	3	2	1	0
Res.	Res.	Res.	Res.	Res.	Res.	Res.	Res.	Res.	Res.	Res.	TXFRQ	RXFRQ	MMRQ	SBKRQ	Res.
											w	w	w	w	

Bits 31:5 Reserved, must be kept at reset value.

Bit 4 **TXFRQ**: Transmit data flush request

This bit is used when FIFO mode is enabled. TXFRQ bit is set to flush the whole FIFO. This sets the flag TXFE (TXFIFO empty, bit 23 in the LPUART_ISR register).

Note: In FIFO mode, the TXFNF flag is reset during the flush request until TxFIFO is empty in order to ensure that no data are written in the data register.

Bit 3 **RXFRQ**: Receive data flush request

Writing 1 to this bit clears the RXNE flag.

This enables discarding the received data without reading it, and avoid an overrun condition.

Bit 2 **MMRQ**: Mute mode request

Writing 1 to this bit puts the LPUART in mute mode and resets the RWU flag.

Bit 1 **SBKRQ**: Send break request

Writing 1 to this bit sets the SBKF flag and request to send a BREAK on the line, as soon as the transmit machine is available.

Note: If the application needs to send the break character following all previously inserted data, including the ones not yet transmitted, the software should wait for the TXE flag assertion before setting the SBKRQ bit.

Bit 0 Reserved, must be kept at reset value.

29.7.7 LPUART interrupt and status register (LPUART_ISR)

Address offset: 0x1C

Reset value: 0x0080 00C0

The same register can be used in FIFO mode enabled (this section) and FIFO mode disabled (next section).

FIFO mode enabled

31	30	29	28	27	26	25	24	23	22	21	20	19	18	17	16
Res.	Res.	Res.	Res.	TXFT	RXFT	Res.	RXFF	TXFE	REACK	TEACK	WUF	RWU	SBKF	CMF	BUSY
				r	r		r	r	r	r	r	r	r	r	r

15	14	13	12	11	10	9	8	7	6	5	4	3	2	1	0
Res.	Res.	Res.	Res.	Res.	CTS	CTSIF	Res.	TXFNF	TC	RXFNE	IDLE	ORE	NE	FE	PE
					r	r		r	r	r	r	r	r	r	r

Bits 31:28 Reserved, must be kept at reset value.

Bit 27 **TXFT**: TXFIFO threshold flag

This bit is set by hardware when the TXFIFO reaches the threshold programmed in TXFTCFG in LPUART_CR3 register i.e. the TXFIFO contains TXFTCFG empty locations. An interrupt is generated if the TXFTIE bit = 1 (bit 31) in the LPUART_CR3 register.

0: TXFIFO does not reach the programmed threshold.

1: TXFIFO reached the programmed threshold.

Bit 26 **RXFT**: RXFIFO threshold flag

This bit is set by hardware when the RXFIFO reaches the threshold programmed in RXFTCFG in LPUART_CR3 register i.e. the Receive FIFO contains RXFTCFG data. An interrupt is generated if the RXFTIE bit = 1 (bit 27) in the LPUART_CR3 register.

0: Receive FIFO does not reach the programmed threshold.

1: Receive FIFO reached the programmed threshold.

Bit 25 Reserved, must be kept at reset value.

Bit 24 **RXFF**: RXFIFO full

This bit is set by hardware when the number of received data corresponds to RXFIFO size + 1 (RXFIFO full + 1 data in the LPUART_RDR register.

An interrupt is generated if the RXFFIE bit = 1 in the LPUART_CR1 register.

0: RXFIFO is not full

1: RXFIFO is full

Bit 23 **TXFE**: TXFIFO empty

This bit is set by hardware when TXFIFO is empty. When the TXFIFO contains at least one data, this flag is cleared. The TXFE flag can also be set by writing 1 to the bit TXFRQ (bit 4) in the LPUART_RQR register.

An interrupt is generated if the TXFEIE bit = 1 (bit 30) in the LPUART_CR1 register.

0: TXFIFO is not empty

1: TXFIFO is empty

Bit 22 **REACK**: Receive enable acknowledge flag

This bit is set/reset by hardware, when the Receive Enable value is taken into account by the LPUART.

It can be used to verify that the LPUART is ready for reception before entering low-power mode.

Note: If the LPUART does not support the wake-up from Stop feature, this bit is reserved and kept at reset value.

Bit 21 **TEACK**: Transmit enable acknowledge flag

This bit is set/reset by hardware, when the Transmit Enable value is taken into account by the LPUART.

It can be used when an idle frame request is generated by writing TE = 0, followed by TE = 1 in the LPUART_CR1 register, in order to respect the TE = 0 minimum period.

Bit 20 **WUF**: Wake-up from low-power mode flag

This bit is set by hardware, when a wake-up event is detected. The event is defined by the WUS bitfield. It is cleared by software, writing a 1 to the WUCF in the LPUART_ICR register.

An interrupt is generated if WUFIE = 1 in the LPUART_CR3 register.

Note: When UESM is cleared, WUF flag is also cleared.

If the LPUART does not support the wake-up from Stop feature, this bit is reserved and kept at reset value

Bit 19 **RWU**: Receiver wake-up from mute mode

This bit indicates if the LPUART is in mute mode. It is cleared/set by hardware when a wake-up/mute sequence is recognized. The mute mode control sequence (address or IDLE) is selected by the WAKE bit in the LPUART_CR1 register.

When wake-up on IDLE mode is selected, this bit can only be set by software, writing 1 to the MMRQ bit in the LPUART_RQR register.

0: Receiver in Active mode

1: Receiver in mute mode

Note: If the LPUART does not support the wake-up from Stop feature, this bit is reserved and kept at reset value.

Bit 18 **SBKF**: Send break flag

This bit indicates that a send break character was requested. It is set by software, by writing 1 to the SBKRQ bit in the LPUART_CR3 register. It is automatically reset by hardware during the stop bit of break transmission.

0: Break character transmitted

1: Break character requested by setting SBKRQ bit in LPUART_RQR register

Bit 17 **CMF**: Character match flag

This bit is set by hardware, when a the character defined by ADD[7:0] is received. It is cleared by software, writing 1 to the CMCF in the LPUART_ICR register.

An interrupt is generated if CMIE = 1in the LPUART_CR1 register.

0: No Character match detected

1: Character Match detected

Bit 16 **BUSY**: Busy flag

This bit is set and reset by hardware. It is active when a communication is ongoing on the RX line (successful start bit detected). It is reset at the end of the reception (successful or not).

0: LPUART is idle (no reception)

1: Reception on going

Bits 15:11 Reserved, must be kept at reset value.

Bit 10 **CTS**: CTS flag

This bit is set/reset by hardware. It is an inverted copy of the status of the CTS input pin.

0: CTS line set

1: CTS line reset

Note: If the hardware flow control feature is not supported, this bit is reserved and kept at reset value.

Bit 9 **CTSIF**: CTS interrupt flag

This bit is set by hardware when the CTS input toggles, if the CTSE bit is set. It is cleared by software, by writing 1 to the CTSCF bit in the LPUART_ICR register.

An interrupt is generated if CTSIE = 1 in the LPUART_CR3 register.

0: No change occurred on the CTS status line

1: A change occurred on the CTS status line

Note: If the hardware flow control feature is not supported, this bit is reserved and kept at reset value.

Bit 8 Reserved, must be kept at reset value.

Bit 7 **TXFNF:** TXFIFO not full

TXFNF is set by hardware when TXFIFO is not full, and so data can be written in the LPUART_TDR. Every write in the LPUART_TDR places the data in the TXFIFO. This flag remains set until the TXFIFO is full. When the TXFIFO is full, this flag is cleared indicating that data can not be written into the LPUART_TDR.

The TXFNF is kept reset during the flush request until TXFIFO is empty. After sending the flush request (by setting TXFRQ bit), the flag TXFNF should be checked prior to writing in TXFIFO (TXFNF and TXFE are set at the same time).

An interrupt is generated if the TXFNFIE bit = 1 in the LPUART_CR1 register.

0: Data register is full/Transmit FIFO is full.

1: Data register/Transmit FIFO is not full.

Note: This bit is used during single buffer transmission.

Bit 6 **TC**: Transmission complete

This bit is set by hardware if the transmission of a frame containing data is complete and if TXFF is set. An interrupt is generated if TCIE = 1 in the LPUART_CR1 register. It is cleared by software, writing 1 to the TCCF in the LPUART_ICR register or by a write to the LPUART_TDR register.

An interrupt is generated if TCIE = 1 in the LPUART_CR1 register.

0: Transmission is not complete

1: Transmission is complete

Note: If TE bit is reset and no transmission is on going, the TC bit is set immediately.

Bit 5 **RXFNE**: RXFIFO not empty

RXFNE bit is set by hardware when the RXFIFO is not empty, and so data can be read from the LPUART_RDR register. Every read of the LPUART_RDR frees a location in the RXFIFO. It is cleared when the RXFIFO is empty.

The RXFNE flag can also be cleared by writing 1 to the RXFRQ in the LPUART_RQR register.

An interrupt is generated if RXFNEIE = 1 in the LPUART_CR1 register.

0: Data is not received

1: Received data is ready to be read.

Bit 4 **IDLE**: Idle line detected

This bit is set by hardware when an Idle line is detected. An interrupt is generated if IDLEIE = 1 in the LPUART_CR1 register. It is cleared by software, writing 1 to the IDLECF in the LPUART_ICR register.

0: No Idle line is detected

1: Idle line is detected

Note: The IDLE bit is not set again until the RXFNE bit has been set (i.e. a new idle line occurs).

If mute mode is enabled (MME = 1), IDLE is set if the LPUART is not mute (RWU = 0), whatever the mute mode selected by the WAKE bit. If RWU = 1, IDLE is not set.

Bit 3 **ORE**: Overrun error

This bit is set by hardware when the data currently being received in the shift register is ready to be transferred into the LPUART_RDR register while RXFF = 1. It is cleared by a software, writing 1 to the ORECF, in the LPUART_ICR register.

An interrupt is generated if RXFNEIE = 1 or EIE = 1 in the LPUART_CR1 register, or EIE = 1 in the LPUART_CR3 register.

0: No overrun error

1: Overrun error is detected

Note: When this bit is set, the LPUART_RDR register content is not lost but the shift register is overwritten. An interrupt is generated if the ORE flag is set during multi buffer communication if the EIE bit is set.

This bit is permanently forced to 0 (no overrun detection) when the bit OVRDIS is set in the LPUART_CR3 register.

Bit 2 **NE:** Start bit noise detection flag

This bit is set by hardware when noise is detected on the start bit of a received frame. It is cleared by software, writing 1 to the NECF bit in the LPUART_ICR register.

0: No noise is detected

1: Noise is detected

Note: This bit does not generate an interrupt as it appears at the same time as the RXFNE bit which itself generates an interrupt. An interrupt is generated when the NE flag is set during multi buffer communication if the EIE bit is set.

This error is associated with the character in the LPUART_RDR.

Bit 1 **FE**: Framing error

This bit is set by hardware when a de-synchronization, excessive noise or a break character is detected. It is cleared by software, writing 1 to the FECF bit in the LPUART_ICR register.

When transmitting data in smartcard mode, this bit is set when the maximum number of transmit attempts is reached without success (the card NACKs the data frame).

An interrupt is generated if EIE = 1 in the LPUART_CR3 register.

0: No Framing error is detected

1: Framing error or break character is detected

Note: This error is associated with the character in the LPUART_RDR.

Bit 0 **PE**: Parity error

This bit is set by hardware when a parity error occurs in receiver mode. It is cleared by software, writing 1 to the PECF in the LPUART_ICR register.

An interrupt is generated if PEIE = 1 in the LPUART_CR1 register.

0: No parity error

1: Parity error

Note: This error is associated with the character in the LPUART_RDR.

29.7.8 LPUART interrupt and status register [alternate] (LPUART_ISR)

Address offset: 0x1C

Reset value: 0x0000 00C0

The same register can be used in FIFO mode enabled (previous section) and FIFO mode disabled (this section).

FIFO mode disabled

31	30	29	28	27	26	25	24	23	22	21	20	19	18	17	16
Res.	Res.	Res.	Res.	Res.	Res.	Res.	Res.	Res.	REACK	TEACK	WUF	RWU	SBKF	CMF	BUSY
									r	r	r	r	r	r	r

15	14	13	12	11	10	9	8	7	6	5	4	3	2	1	0
Res.	Res.	Res.	Res.	Res.	CTS	CTSIF	Res.	TXE	TC	RXNE	IDLE	ORE	NE	FE	PE
					r	r		r	r	r	r	r	r	r	r

Bits 31:23 Reserved, must be kept at reset value.

Bit 22 **REACK**: Receive enable acknowledge flag

This bit is set/reset by hardware when the Receive Enable value is taken into account by the LPUART.

It can be used to verify that the LPUART is ready for reception before entering low-power mode.

Note: If the LPUART does not support the wake-up from Stop feature, this bit is reserved and kept at reset value.

Bit 21 **TEACK**: Transmit enable acknowledge flag

This bit is set/reset by hardware, when the Transmit Enable value is taken into account by the LPUART.

It can be used when an idle frame request is generated by writing TE = 0, followed by TE = 1 in the LPUART_CR1 register, in order to respect the TE = 0 minimum period.

Bit 20 **WUF**: Wake-up from low-power mode flag

This bit is set by hardware, when a wake-up event is detected. The event is defined by the WUS bitfield. It is cleared by software, writing a 1 to the WUCF in the LPUART_ICR register.

An interrupt is generated if WUFIE = 1 in the LPUART_CR3 register.

Note: When UESM is cleared, WUF flag is also cleared.

If the LPUART does not support the wake-up from Stop feature, this bit is reserved and kept at reset value

Bit 19 **RWU**: Receiver wake-up from mute mode

This bit indicates if the LPUART is in mute mode. It is cleared/set by hardware when a wake-up/mute sequence is recognized. The mute mode control sequence (address or IDLE) is selected by the WAKE bit in the LPUART_CR1 register.

When wake-up on IDLE mode is selected, this bit can only be set by software, writing 1 to the MMRQ bit in the LPUART_RQR register.

0: Receiver in active mode

1: Receiver in mute mode

Note: If the LPUART does not support the wake-up from Stop feature, this bit is reserved and kept at reset value.

Bit 18 **SBKF**: Send break flag

This bit indicates that a send break character was requested. It is set by software, by writing 1 to the SBKRQ bit in the LPUART_CR3 register. It is automatically reset by hardware during the stop bit of break transmission.

0: Break character transmitted

1: Break character requested by setting SBKRQ bit in LPUART_RQR register

Bit 17 **CMF**: Character match flag

This bit is set by hardware, when a the character defined by ADD[7:0] is received. It is cleared by software, writing 1 to the CMCF in the LPUART_ICR register.

An interrupt is generated if CMIE = 1in the LPUART_CR1 register.

0: No Character match detected

1: Character Match detected

Bit 16 **BUSY**: Busy flag

This bit is set and reset by hardware. It is active when a communication is ongoing on the RX line (successful start bit detected). It is reset at the end of the reception (successful or not).

0: LPUART is idle (no reception)

1: Reception on going

Bits 15:11 Reserved, must be kept at reset value.

Bit 10 **CTS**: CTS flag

This bit is set/reset by hardware. It is an inverted copy of the status of the CTS input pin.

0: CTS line set

1: CTS line reset

Note: If the hardware flow control feature is not supported, this bit is reserved and kept at reset value.

Bit 9 **CTSIF**: CTS interrupt flag

This bit is set by hardware when the CTS input toggles, if the CTSE bit is set. It is cleared by software, by writing 1 to the CTSCF bit in the LPUART_ICR register.

An interrupt is generated if CTSIE = 1 in the LPUART_CR3 register.

0: No change occurred on the CTS status line

1: A change occurred on the CTS status line

Note: If the hardware flow control feature is not supported, this bit is reserved and kept at reset value.

Bit 8 Reserved, must be kept at reset value.

Bit 7 **TXE:** Transmit data register empty/TXFIFO not full

TXE is set by hardware when the content of the LPUART_TDR register has been transferred into the shift register. It is cleared by a write to the LPUART_TDR register.

An interrupt is generated if the TXEIE bit =1 in the LPUART_CR1 register.

0: Data register full

1: Data register not full

Note: This bit is used during single buffer transmission.

Bit 6 **TC**: Transmission complete

This bit is set by hardware if the transmission of a frame containing data is complete and if TXE is set. An interrupt is generated if TCIE = 1 in the LPUART_CR1 register. It is cleared by software, writing 1 to the TCCF in the LPUART_ICR register or by a write to the LPUART_TDR register.

An interrupt is generated if TCIE = 1 in the LPUART_CR1 register.

0: Transmission is not complete

1: Transmission is complete

Note: If TE bit is reset and no transmission is on going, the TC bit is immediately set.

Bit 5 **RXNE**: Read data register not empty

RXNE bit is set by hardware when the content of the LPUART_RDR shift register has been transferred to the LPUART_RDR register. It is cleared by reading from the LPUART_RDR register. The RXNE flag can also be cleared by writing 1 to the RXFRQ in the LPUART_RQR register.

An interrupt is generated if RXNEIE = 1 in the LPUART_CR1 register.

0: Data is not received

1: Received data is ready to be read.

Bit 4 **IDLE**: Idle line detected

This bit is set by hardware when an Idle Line is detected. An interrupt is generated if IDLEIE = 1 in the LPUART_CR1 register. It is cleared by software, writing 1 to the IDLECF in the LPUART_ICR register.

0: No Idle line is detected

1: Idle line is detected

Note: The IDLE bit is not set again until the RXNE bit has been set (i.e. a new idle line occurs).

If mute mode is enabled (MME = 1), IDLE is set if the LPUART is not mute (RWU = 0), whatever the mute mode selected by the WAKE bit. If RWU = 1, IDLE is not set.

Bit 3 **ORE**: Overrun error

This bit is set by hardware when the data currently being received in the shift register is ready to be transferred into the LPUART_RDR register while RXNE = 1. It is cleared by a software, writing 1 to the ORECF, in the LPUART_ICR register.

An interrupt is generated if RXNEIE = 1 or EIE = 1 in the LPUART_CR1 register, or EIE = 1 in the LPUART_CR3 register.

0: No overrun error

1: Overrun error is detected

Note: When this bit is set, the LPUART_RDR register content is not lost but the shift register is overwritten. An interrupt is generated if the ORE flag is set during multi buffer communication if the EIE bit is set.

This bit is permanently forced to 0 (no overrun detection) when the bit OVRDIS is set in the LPUART_CR3 register.

Bit 2 **NE:** Start bit noise detection flag

This bit is set by hardware when noise is detected on the start bit of a received frame. It is cleared by software, writing 1 to the NECF bit in the LPUART_ICR register.

0: No noise is detected

1: Noise is detected

Note: This bit does not generate an interrupt as it appears at the same time as the RXNE bit which itself generates an interrupt. An interrupt is generated when the NE flag is set during multi buffer communication if the EIE bit is set.

Bit 1 **FE**: Framing error

This bit is set by hardware when a de-synchronization, excessive noise or a break character is detected. It is cleared by software, writing 1 to the FECF bit in the LPUART_ICR register.

When transmitting data in smartcard mode, this bit is set when the maximum number of transmit attempts is reached without success (the card NACKs the data frame).

An interrupt is generated if EIE = 1 in the LPUART_CR3 register.

0: No Framing error is detected

1: Framing error or break character is detected

Bit 0 **PE**: Parity error

This bit is set by hardware when a parity error occurs in receiver mode. It is cleared by software, writing 1 to the PECF in the LPUART_ICR register.

An interrupt is generated if PEIE = 1 in the LPUART_CR1 register.

0: No parity error

1: Parity error

29.7.9 LPUART interrupt flag clear register (LPUART_ICR)

Address offset: 0x20

Reset value: 0x0000 0000

31	30	29	28	27	26	25	24	23	22	21	20	19	18	17	16
Res.	Res.	Res.	Res.	Res.	Res.	Res.	Res.	Res.	Res.	Res.	WUCF	Res.	Res.	CMCF	Res.
											w			w	

15	14	13	12	11	10	9	8	7	6	5	4	3	2	1	0
Res.	Res.	Res.	Res.	Res.	Res.	CTSCF	Res.	Res.	TCCF	Res.	IDLECF	ORECF	NECF	FECF	PECF
						w			w		w	w	w	w	w

Bits 31:21 Reserved, must be kept at reset value.

Bit 20 **WUCF**: Wake-up from low-power mode clear flag

Writing 1 to this bit clears the WUF flag in the LPUART_ISR register.

Note: If the LPUART does not support the wake-up from Stop feature, this bit is reserved and kept at reset value. Refer to Section 28.4: USART implementation.

Bits 19:18 Reserved, must be kept at reset value.

Bit 17 **CMCF**: Character match clear flag

Writing 1 to this bit clears the CMF flag in the LPUART_ISR register.

Bits 16:10 Reserved, must be kept at reset value.

Bit 9 **CTSCF**: CTS clear flag

Writing 1 to this bit clears the CTSIF flag in the LPUART_ISR register.

Bits 8:7 Reserved, must be kept at reset value.

Bit 6 **TCCF**: Transmission complete clear flag
Writing 1 to this bit clears the TC flag in the LPUART_ISR register.

Bit 5 Reserved, must be kept at reset value.

Bit 4 **IDLECF**: Idle line detected clear flag
Writing 1 to this bit clears the IDLE flag in the LPUART_ISR register.

Bit 3 **ORECF**: Overrun error clear flag
Writing 1 to this bit clears the ORE flag in the LPUART_ISR register.

Bit 2 **NECF**: Noise detected clear flag
Writing 1 to this bit clears the NE flag in the LPUART_ISR register.

Bit 1 **FECF**: Framing error clear flag
Writing 1 to this bit clears the FE flag in the LPUART_ISR register.

Bit 0 **PECF**: Parity error clear flag
Writing 1 to this bit clears the PE flag in the LPUART_ISR register.

29.7.10 LPUART receive data register (LPUART_RDR)

Address offset: 0x24

Reset value: 0x0000 0000

31	30	29	28	27	26	25	24	23	22	21	20	19	18	17	16
Res.	Res.	Res.	Res.	Res.	Res.	Res.	Res.	Res.	Res.	Res.	Res.	Res.	Res.	Res.	Res.

15	14	13	12	11	10	9	8	7	6	5	4	3	2	1	0
Res.	Res.	Res.	Res.	Res.	Res.	Res.	RDR[8:0]								
							r	r	r	r	r	r	r	r	r

Bits 31:9 Reserved, must be kept at reset value.

Bits 8:0 **RDR[8:0]**: Receive data value
Contains the received data character.
The RDR register provides the parallel interface between the input shift register and the internal bus (see *Figure 273*).
When receiving with the parity enabled, the value read in the MSB bit is the received parity bit.

29.7.11 LPUART transmit data register (LPUART_TDR)

Address offset: 0x28

Reset value: 0x0000 0000

31	30	29	28	27	26	25	24	23	22	21	20	19	18	17	16
Res.	Res.	Res.	Res.	Res.	Res.	Res.	Res.	Res.	Res.	Res.	Res.	Res.	Res.	Res.	Res.

15	14	13	12	11	10	9	8	7	6	5	4	3	2	1	0
Res.	Res.	Res.	Res.	Res.	Res.	Res.	TDR[8:0]								
							rw	rw	rw	rw	rw	rw	rw	rw	rw

Bits 31:9 Reserved, must be kept at reset value.

Bits 8:0 **TDR[8:0]**: Transmit data value

Contains the data character to be transmitted.

The TDR register provides the parallel interface between the internal bus and the output shift register (see *Figure 273*).

When transmitting with the parity enabled (PCE bit set to 1 in the LPUART_CR1 register), the value written in the MSB (bit 7 or bit 8 depending on the data length) has no effect because it is replaced by the parity.

Note: This register must be written only when TXE/TXFNF = 1.

29.7.12 LPUART prescaler register (LPUART_PRESC)

This register can only be written when the LPUART is disabled (UE = 0).

Address offset: 0x2C

Reset value: 0x0000 0000

31	30	29	28	27	26	25	24	23	22	21	20	19	18	17	16
Res.	Res.	Res.	Res.	Res.	Res.	Res.	Res.	Res.	Res.	Res.	Res.	Res.	Res.	Res.	Res.
15	14	13	12	11	10	9	8	7	6	5	4	3	2	1	0
Res.	Res.	Res.	Res.	Res.	Res.	Res.	Res.	Res.	Res.	Res.	Res.	PRESCALER[3:0]			
												rw	rw	rw	rw

Bits 31:4 Reserved, must be kept at reset value.

Bits 3:0 **PRESCALER[3:0]**: Clock prescaler

The LPUART input clock can be divided by a prescaler:

0000: input clock not divided
0001: input clock divided by 2
0010: input clock divided by 4
0011: input clock divided by 6
0100: input clock divided by 8
0101: input clock divided by 10
0110: input clock divided by 12
0111: input clock divided by 16
1000: input clock divided by 32
1001: input clock divided by 64
1010: input clock divided by 128
1011: input clock divided by 256
Remaining combinations: Reserved.

Note: When PRESCALER is programmed with a value different of the allowed ones, programmed prescaler value is 1011 i.e. input clock divided by 256.

If the prescaler is not supported, this bitfield is reserved and must be kept at reset value. Refer to Section 29.3: LPUART implementation on page 924.

29.7.13 LPUART register map

The table below gives the LPUART register map and reset values.

Table 193. LPUART register map and reset values

Offset	Register name reset value	31	30	29	28	27	26	25	24	23	22	21	20	19	18	17	16	15	14	13	12	11	10	9	8	7	6	5	4	3	2	1	0
0x00	LPUART_CR1 FIFO mode enabled	RXFFIE	TXFEIE	FIFOEN	M1	Res.	Res.	DEAT[4:0]					DEDT[4:0]					Res.	CMIE	MME	M0	WAKE	PCE	PS	PEIE	TXFNFIE	TCIE	RXFNEIE	IDLEIE	TE	RE	UESM	UE
	Reset value	0	0	0	0			0	0	0	0	0	0	0	0	0	0		0	0	0	0	0	0	0	0	0	0	0	0	0	0	0
0x00	LPUART_CR1 FIFO mode disabled	Res.	Res.	FIFOEN	M1	Res.	Res.	DEAT[4:0]					DEDT[4:0]					Res.	CMIE	MME	M0	WAKE	PCE	PS	PEIE	TXEIE	TCIE	RXNEIE	IDLEIE	TE	RE	UESM	UE
	Reset value			0	0			0	0	0	0	0	0	0	0	0	0		0	0	0	0	0	0	0	0	0	0	0	0	0	0	0
0x04	LPUART_CR2	ADD[7:0]								Res.	Res.	Res.	Res.	MSBFIRST	DATAINV	TXINV	RXINV	SWAP	Res.	STOP [1:0]		Res.	Res.	Res.	Res.	Res.	Res.	Res.	ADDM7	Res.	Res.	Res.	Res.
	Reset value	0	0	0	0	0	0	0	0					0	0	0	0	0		0	0								0				
0x08	LPUART_CR3	TXFTCFG[2:0]		RXFTIE		RXFTCFG[2:0]			Res.	TXFTIE	WUFIE	WUS [1:0]		Res.	Res.	Res.	Res.	DEP	DEM	DDRE	OVRDIS	Res.	CTSIE	CTSE	RTSE	DMAT	DMAR	Res.	Res.	HDSEL	Res.	Res.	EIE
	Reset value	0	0	0	0	0	0	0		0	0	0	0					0	0	0	0		0	0	0	0	0			0			0
0x0C	LPUART_BRR	Res.	Res.	Res.	Res.	Res.	Res.	Res.	Res.	Res.	Res.	Res.	Res.	BRR[19:0]																			
	Reset value																		0	0	0	0	0	0	0	0	0	0	0	0	0	0	0
0x10-0x14	Reserved																																
0x18	LPUART_RQR	Res.	Res.	Res.	Res.	Res.	Res.	Res.	Res.	Res.	Res.	Res.	Res.	Res.	Res.	Res.	Res.	Res.	Res.	Res.	Res.	Res.	Res.	Res.	Res.	Res.	Res.	Res.	TXFRQ	RXFRQ	MMRQ	SBKRQ	Res.
	Reset value																												0	0	0	0	
0x1C	LPUART_ISR FIFO mode enabled	Res.	Res.	Res.	Res.	TXFT	RXFT	Res.	RXFF	TXFF	REACK	TEACK	WUF	RWU	SBKF	CMF	BUSY	Res.	Res.	Res.	Res.	Res.	CTS	CTSIF	Res.	TXFNF	TC	RXFNE	IDLE	ORE	NE	FE	PE
	Reset value					0	0		0	1	0	0	0	0	0	0	0						0	0		1	1	0	0	0	0	0	0
0x1C	LPUART_ISR FIFO mode disabled	Res.	Res.	Res.	Res.	Res.	Res.	Res.	Res.	Res.	REACK	TEACK	WUF	RWU	SBKF	CMF	BUSY	Res.	Res.	Res.	Res.	Res.	CTS	CTSIF	Res.	TXE	TC	RXNE	IDLE	ORE	NE	FE	PE
	Reset value										0	0	0	0	0	0	0						0	0		1	1	0	0	0	0	0	0
0x20	LPUART_ICR	Res.	Res.	Res.	Res.	Res.	Res.	Res.	Res.	Res.	Res.	Res.	WUCF	Res.	Res.	CMCF	Res.	Res.	Res.	Res.	Res.	Res.	Res.	CTSCF	Res.	Res.	TCCF	Res.	IDLECF	ORECF	NECF	FECF	PECF
	Reset value												0			0								0			0		0	0	0	0	0
0x24	LPUART_RDR	Res.	Res.	Res.	Res.	Res.	Res.	Res.	Res.	Res.	Res.	Res.	Res.	Res.	Res.	Res.	Res.	Res.	Res.	Res.	Res.	Res.	Res.	Res.	RDR[8:0]								
	Reset value																								0	0	0	0	0	0	0	0	0
0x28	LPUART_TDR	Res.	Res.	Res.	Res.	Res.	Res.	Res.	Res.	Res.	Res.	Res.	Res.	Res.	Res.	Res.	Res.	Res.	Res.	Res.	Res.	Res.	Res.	Res.	TDR[8:0]								
	Reset value																								0	0	0	0	0	0	0	0	0

Table 193. LPUART register map and reset values (continued)

Offset	Register name reset value	31	30	29	28	27	26	25	24	23	22	21	20	19	18	17	16	15	14	13	12	11	10	9	8	7	6	5	4	3	2	1	0
0x2C	LPUART_ PRESC	Res.	Res.	Res.	Res.	Res.	Res.	Res.	Res.	Res.	Res.	Res.	Res.	Res.	Res.	Res.	Res.	Res.	Res.	Res.	Res.	Res.	Res.	Res.	Res.	Res.	Res.	Res.	Res.	PRESCALER[3:0]			
	Reset value																													0	0	0	0

Refer to *Section 2.2: Memory organization* for the register boundary addresses.

30 Serial peripheral interface (SPI)

30.1 Introduction

The SPI interface can be used to communicate with external devices using the SPI protocol. SPI mode is selectable by software. SPI Motorola mode is selected by default after a device reset.

The serial peripheral interface (SPI) protocol supports half-duplex, full-duplex and simplex synchronous, serial communication with external devices. The interface can be configured as master and in this case it provides the communication clock (SCK) to the external slave device. The interface is also capable of operating in multimaster configuration.

30.2 SPI main features

- Master or slave operation
- Full-duplex synchronous transfers on three lines
- Half-duplex synchronous transfer on two lines (with bidirectional data line)
- Simplex synchronous transfers on two lines (with unidirectional data line)
- 4 to 16-bit data size selection
- Multimaster mode capability
- 8 master mode baud rate prescalers up to $f_{PCLK}/2$
- Slave mode frequency up to $f_{PCLK}/2$
- NSS management by hardware or software for both master and slave: dynamic change of master/slave operations
- Programmable clock polarity and phase
- Programmable data order with MSB-first or LSB-first shifting
- Dedicated transmission and reception flags with interrupt capability
- SPI bus busy status flag
- SPI Motorola support
- Hardware CRC feature for reliable communication:
  - CRC value can be transmitted as last byte in Tx mode
  - Automatic CRC error checking for last received byte
- Master mode fault, overrun flags with interrupt capability
- CRC Error flag
- Two 32-bit embedded Rx and Tx FIFOs with DMA capability
- Enhanced TI and NSS pulse modes support

30.3 SPI implementation

The following table describes all the SPI instances and their features embedded in the devices.

Table 194. STM32WB15CC SPI implementation

SPI Features	SPI1
Enhanced NSSP & TI modes	Yes
I^2S support	No
Hardware CRC calculation	Yes
Data size configurable	from 4 to 16-bit
Rx/Tx FIFO size	32-bit
Wake-up capability from Low-power Sleep	Yes

30.4 SPI functional description

30.4.1 General description

The SPI allows synchronous, serial communication between the MCU and external devices. Application software can manage the communication by polling the status flag or using dedicated SPI interrupt. The main elements of SPI and their interactions are shown in the following block diagram *Figure 287*.

Figure 287. SPI block diagram

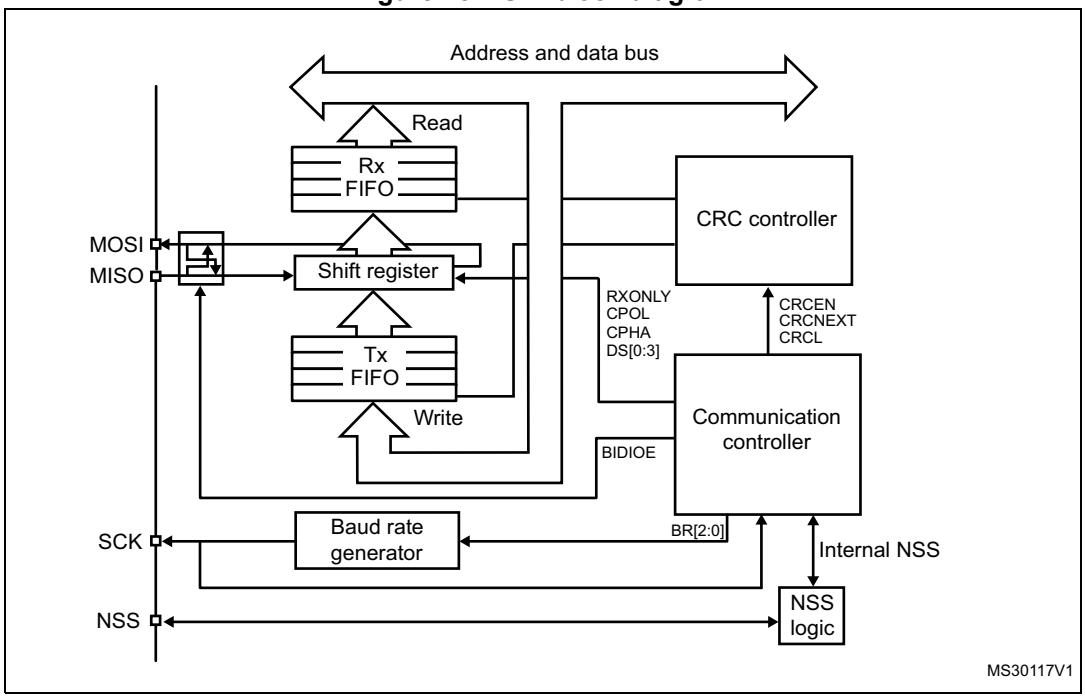

Four I/O pins are dedicated to SPI communication with external devices.

- **MISO:** Master In / Slave Out data. In the general case, this pin is used to transmit data in slave mode and receive data in master mode.
- **MOSI:** Master Out / Slave In data. In the general case, this pin is used to transmit data in master mode and receive data in slave mode.
- **SCK:** Serial Clock output pin for SPI masters and input pin for SPI slaves.
- **NSS:** Slave select pin. Depending on the SPI and NSS settings, this pin can be used to either:
  - select an individual slave device for communication
  - synchronize the data frame or
  - detect a conflict between multiple masters

  See *Section 30.4.5: Slave select (NSS) pin management* for details.

The SPI bus allows the communication between one master device and one or more slave devices. The bus consists of at least two wires - one for the clock signal and the other for synchronous data transfer. Other signals can be added depending on the data exchange between SPI nodes and their slave select signal management.

30.4.2 Communications between one master and one slave

The SPI allows the MCU to communicate using different configurations, depending on the device targeted and the application requirements. These configurations use 2 or 3 wires (with software NSS management) or 3 or 4 wires (with hardware NSS management). Communication is always initiated by the master.

Full-duplex communication

By default, the SPI is configured for full-duplex communication. In this configuration, the shift registers of the master and slave are linked using two unidirectional lines between the MOSI and the MISO pins. During SPI communication, data is shifted synchronously on the SCK clock edges provided by the master. The master transmits the data to be sent to the slave via the MOSI line and receives data from the slave via the MISO line. When the data frame transfer is complete (all the bits are shifted) the information between the master and slave is exchanged.

Figure 288. Full-duplex single master/ single slave application

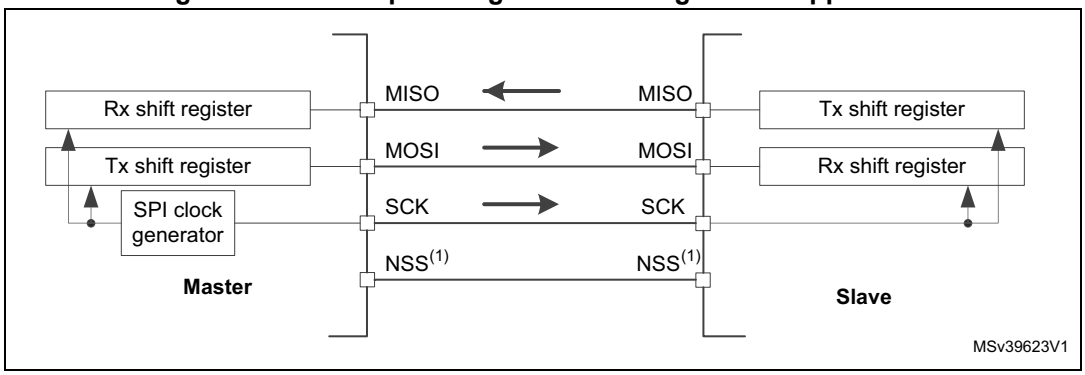

1. The NSS pins can be used to provide a hardware control flow between master and slave. Optionally, the pins can be left unused by the peripheral. Then the flow has to be handled internally for both master and slave. For more details see *Section 30.4.5: Slave select (NSS) pin management*.

Half-duplex communication

The SPI can communicate in half-duplex mode by setting the BIDIMODE bit in the SPIx_CR1 register. In this configuration, one single cross connection line is used to link the shift registers of the master and slave together. During this communication, the data is synchronously shifted between the shift registers on the SCK clock edge in the transfer direction selected reciprocally by both master and slave with the BDIOE bit in their SPIx_CR1 registers. In this configuration, the master's MISO pin and the slave's MOSI pin are free for other application uses and act as GPIOs.

Figure 289. Half-duplex single master/ single slave application

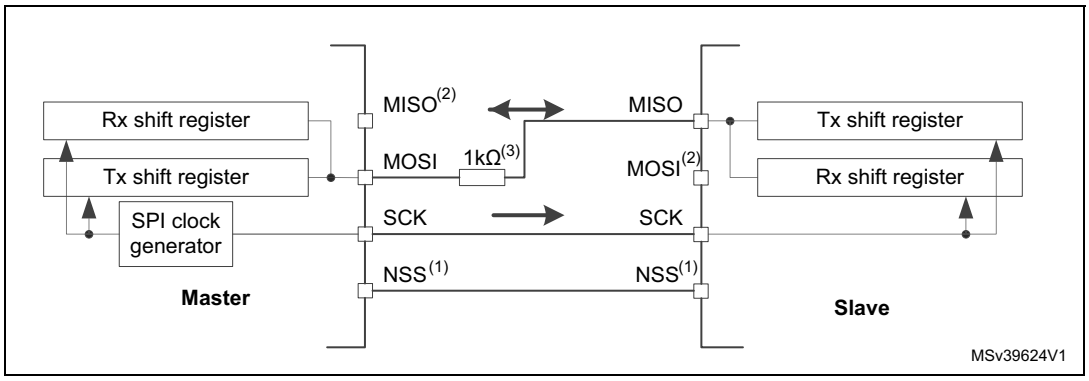

1. The NSS pins can be used to provide a hardware control flow between master and slave. Optionally, the pins can be left unused by the peripheral. Then the flow has to be handled internally for both master and slave. For more details see *Section 30.4.5: Slave select (NSS) pin management*.
2. In this configuration, the master's MISO pin and the slave's MOSI pin can be used as GPIOs.
3. A critical situation can happen when communication direction is changed not synchronously between two nodes working at bidirectionnal mode and new transmitter accesses the common data line while former transmitter still keeps an opposite value on the line (the value depends on SPI configuration and communication data). Both nodes then fight while providing opposite output levels on the common line temporary till next node changes its direction settings correspondingly, too. It is suggested to insert a serial resistance between MISO and MOSI pins at this mode to protect the outputs and limit the current blowing between them at this situation.

Simplex communications

The SPI can communicate in simplex mode by setting the SPI in transmit-only or in receive-only using the RXONLY bit in the SPIx_CR1 register. In this configuration, only one line is used for the transfer between the shift registers of the master and slave. The remaining MISO and MOSI pins pair is not used for communication and can be used as standard GPIOs.

- **Transmit-only mode (RXONLY=0):** The configuration settings are the same as for full-duplex. The application has to ignore the information captured on the unused input pin. This pin can be used as a standard GPIO.
- **Receive-only mode (RXONLY=1)**: The application can disable the SPI output function by setting the RXONLY bit. In slave configuration, the MISO output is disabled and the pin can be used as a GPIO. The slave continues to receive data from the MOSI pin while its slave select signal is active (see *30.4.5: Slave select (NSS) pin management*). Received data events appear depending on the data buffer configuration. In the master configuration, the MOSI output is disabled and the pin can be used as a GPIO. The clock signal is generated continuously as long as the SPI is enabled. The only way to stop the clock is to clear the RXONLY bit or the SPE bit and wait until the incoming pattern from the MISO pin is finished and fills the data buffer structure, depending on its configuration.

Figure 290. Simplex single master/single slave application (master in transmit-only/ slave in receive-only mode)

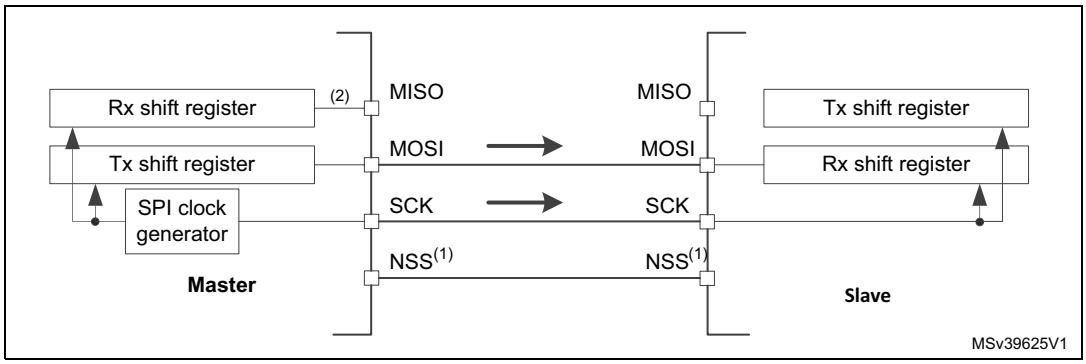

1. The NSS pins can be used to provide a hardware control flow between master and slave. Optionally, the pins can be left unused by the peripheral. Then the flow has to be handled internally for both master and slave. For more details see *Section 30.4.5: Slave select (NSS) pin management*.
2. An accidental input information is captured at the input of transmitter Rx shift register. All the events associated with the transmitter receive flow must be ignored in standard transmit only mode (e.g. OVR flag).
3. In this configuration, both the MISO pins can be used as GPIOs.

Note: Any simplex communication can be alternatively replaced by a variant of the half-duplex communication with a constant setting of the transaction direction (bidirectional mode is enabled while BDIO bit is not changed).

30.4.3 Standard multislave communication

In a configuration with two or more independent slaves, the master uses GPIO pins to manage the chip select lines for each slave (see *Figure 291*). The master must select one of the slaves individually by pulling low the GPIO connected to the slave NSS input. When this is done, a standard master and dedicated slave communication is established.

Figure 291. Master and three independent slaves

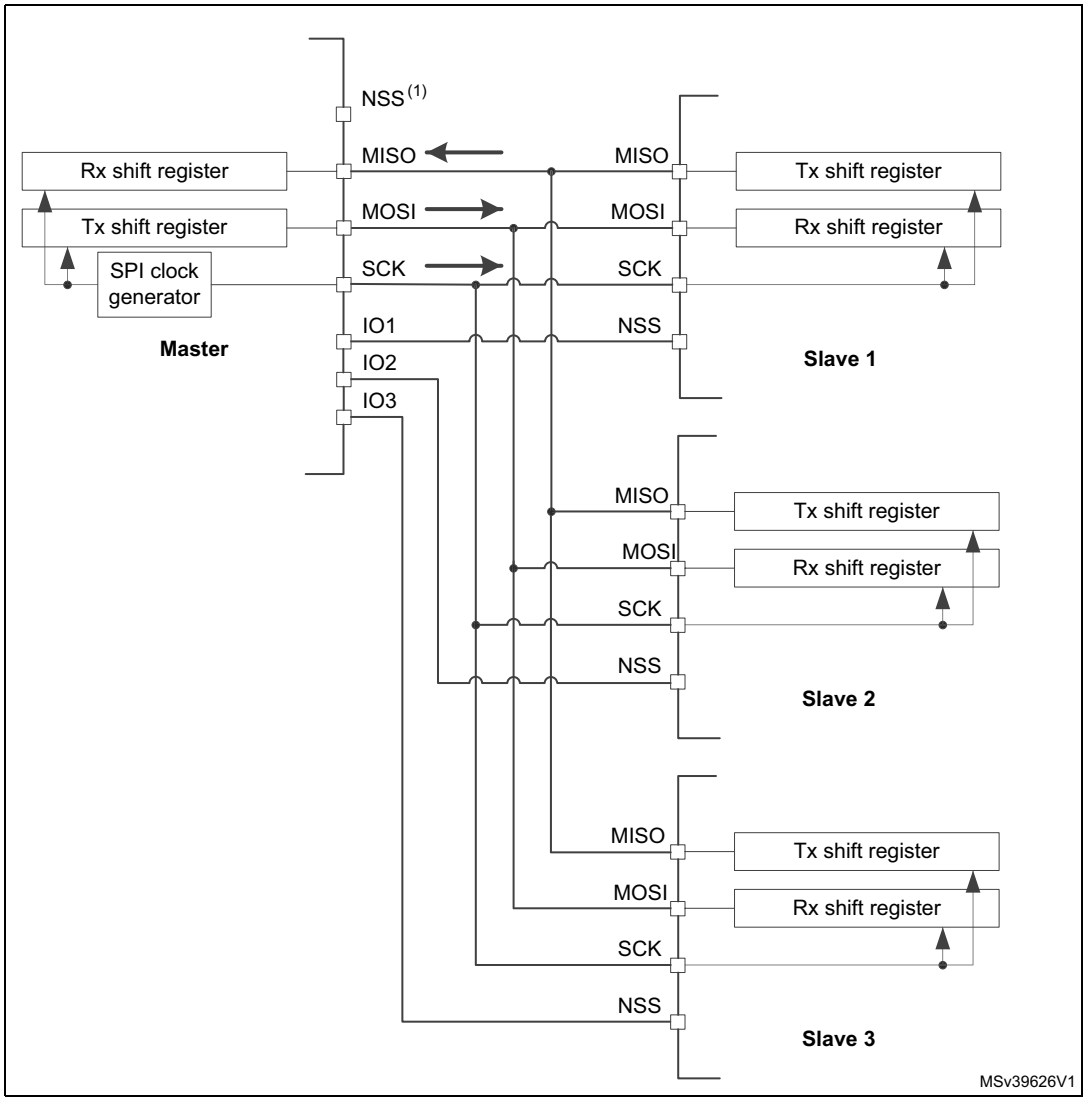

1. NSS pin is not used on master side at this configuration. It has to be managed internally (SSM=1, SSI=1) to prevent any MODF error.
2. As MISO pins of the slaves are connected together, all slaves must have the GPIO configuration of their MISO pin set as alternate function open-drain (see I/O alternate function input/output section (GPIO)).

30.4.4 Multimaster communication

Unless SPI bus is not designed for a multimaster capability primarily, the user can use build in feature which detects a potential conflict between two nodes trying to master the bus at the same time. For this detection, NSS pin is used configured at hardware input mode.

The connection of more than two SPI nodes working at this mode is impossible as only one node can apply its output on a common data line at time.

When nodes are non active, both stay at slave mode by default. Once one node wants to overtake control on the bus, it switches itself into master mode and applies active level on the slave select input of the other node via dedicated GPIO pin. After the session is completed, the active slave select signal is released and the node mastering the bus temporary returns back to passive slave mode waiting for next session start.

If potentially both nodes raised their mastering request at the same time a bus conflict event appears (see mode fault MODF event). Then the user can apply some simple arbitration process (e.g. to postpone next attempt by predefined different time-outs applied at both nodes).

Figure 292. Multimaster application

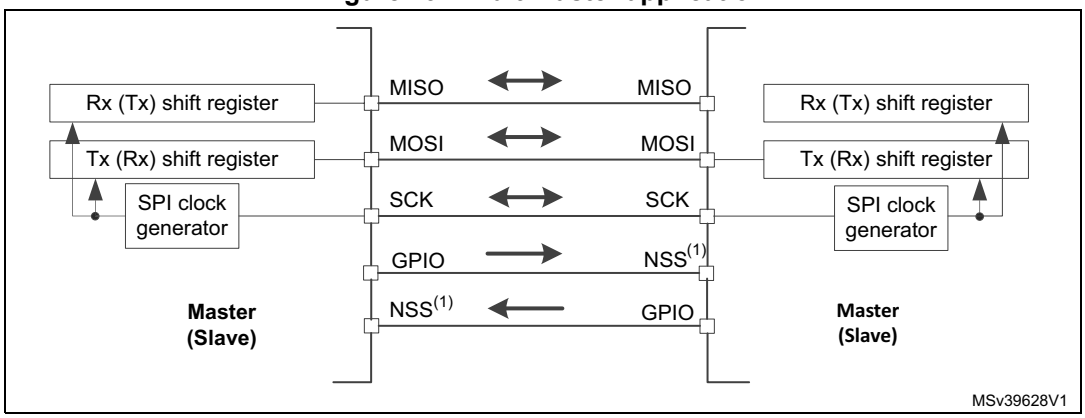

1. The NSS pin is configured at hardware input mode at both nodes. Its active level enables the MISO line output control as the passive node is configured as a slave.

30.4.5 Slave select (NSS) pin management

In slave mode, the NSS works as a standard “chip select” input and lets the slave communicate with the master. In master mode, NSS can be used either as output or input. As an input it can prevent multimaster bus collision, and as an output it can drive a slave select signal of a single slave.

Hardware or software slave select management can be set using the SSM bit in the SPIx_CR1 register:

- **Software NSS management (SSM = 1)**: in this configuration, slave select information is driven internally by the SSI bit value in register SPIx_CR1. The external NSS pin is free for other application uses.
- **Hardware NSS management (SSM = 0)**: in this case, there are two possible configurations. The configuration used depends on the NSS output configuration (SSOE bit in register SPIx_CR1).
  - **NSS output enable (SSM=0,SSOE = 1)**: this configuration is only used when the MCU is set as master. The NSS pin is managed by the hardware. The NSS signal is driven low as soon as the SPI is enabled in master mode (SPE=1), and is kept low until the SPI is disabled (SPE =0). A pulse can be generated between continuous communications if NSS pulse mode is activated (NSSP=1). The SPI cannot work in multimaster configuration with this NSS setting.
  - **NSS output disable (SSM=0, SSOE = 0)**: if the microcontroller is acting as the master on the bus, this configuration allows multimaster capability. If the NSS pin is pulled low in this mode, the SPI enters master mode fault state and the device is automatically reconfigured in slave mode. In slave mode, the NSS pin works as a standard “chip select” input and the slave is selected while NSS line is at low level.

Figure 293. Hardware/software slave select management

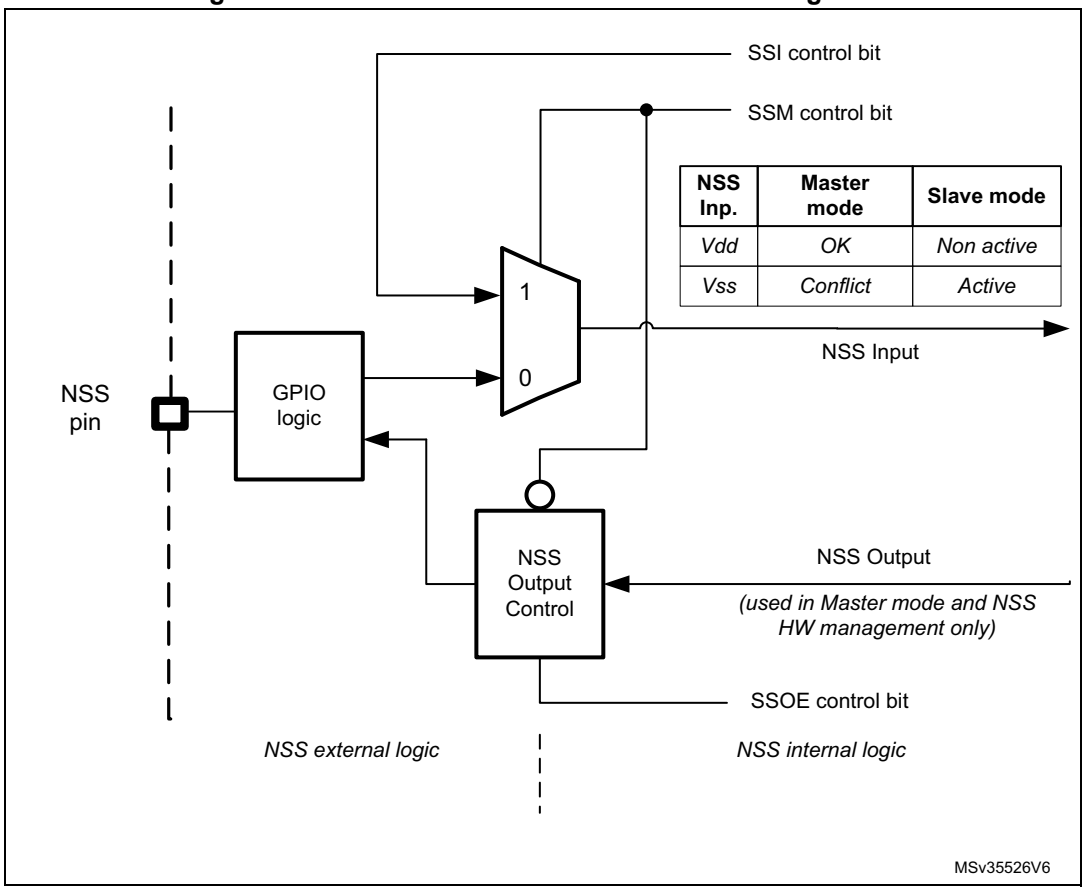

30.4.6 Communication formats

During SPI communication, receive and transmit operations are performed simultaneously. The serial clock (SCK) synchronizes the shifting and sampling of the information on the data lines. The communication format depends on the clock phase, the clock polarity and the data frame format. To be able to communicate together, the master and slaves devices must follow the same communication format.

Clock phase and polarity controls

Four possible timing relationships may be chosen by software, using the CPOL and CPHA bits in the SPIx_CR1 register. The CPOL (clock polarity) bit controls the idle state value of the clock when no data is being transferred. This bit affects both master and slave modes. If CPOL is reset, the SCK pin has a low-level idle state. If CPOL is set, the SCK pin has a high-level idle state.

If the CPHA bit is set, the second edge on the SCK pin captures the first data bit transacted (falling edge if the CPOL bit is reset, rising edge if the CPOL bit is set). Data are latched on each occurrence of this clock transition type. If the CPHA bit is reset, the first edge on the SCK pin captures the first data bit transacted (falling edge if the CPOL bit is set, rising edge if the CPOL bit is reset). Data are latched on each occurrence of this clock transition type.

The combination of CPOL (clock polarity) and CPHA (clock phase) bits selects the data capture clock edge.

Figure 294, shows an SPI full-duplex transfer with the four combinations of the CPHA and CPOL bits.

Note: Prior to changing the CPOL/CPHA bits the SPI must be disabled by resetting the SPE bit.

The idle state of SCK must correspond to the polarity selected in the SPIx_CR1 register (by pulling up SCK if CPOL=1 or pulling down SCK if CPOL=0).

Figure 294. Data clock timing diagram

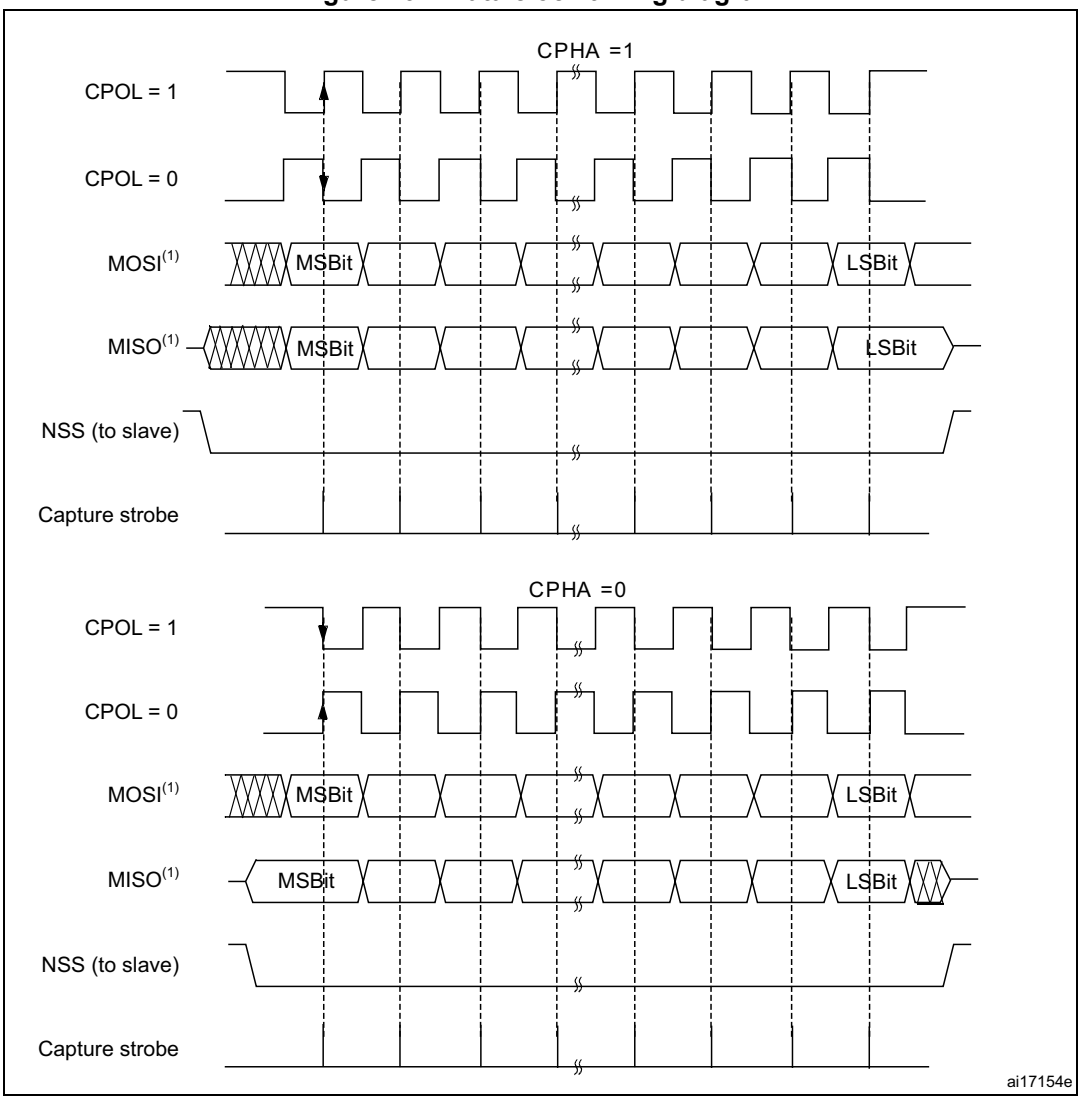

1. The order of data bits depends on LSBFIRST bit setting.

Data frame format

The SPI shift register can be set up to shift out MSB-first or LSB-first, depending on the value of the LSBFIRST bit. The data frame size is chosen by using the DS bits. It can be set from 4-bit up to 16-bit length and the setting applies for both transmission and reception. Whatever the selected data frame size, read access to the FIFO must be aligned with the FRXTH level. When the SPIx_DR register is accessed, data frames are always right-aligned into either a byte (if the data fits into a byte) or a half-word (see *Figure 295*). During communication, only bits within the data frame are clocked and transferred.

Figure 295. Data alignment when data length is not equal to 8-bit or 16-bit

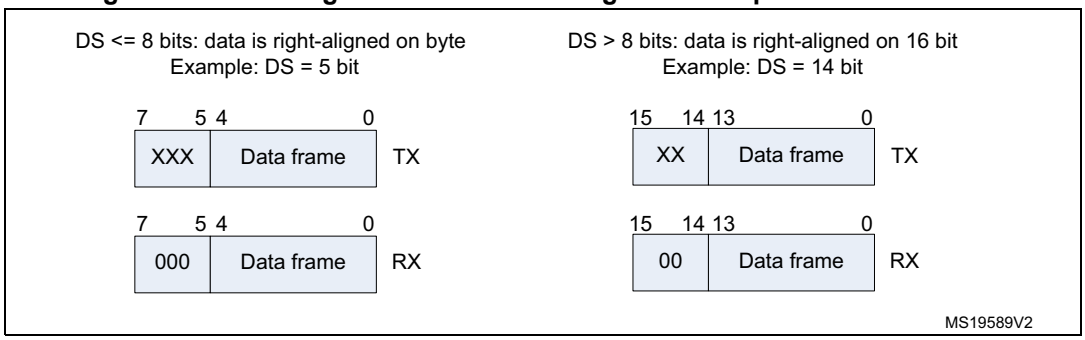

Note: The minimum data length is 4 bits. If a data length of less than 4 bits is selected, it is forced to an 8-bit data frame size.

30.4.7 Configuration of SPI

The configuration procedure is almost the same for master and slave. For specific mode setups, follow the dedicated sections. When a standard communication is to be initialized, perform these steps:

1. Write proper GPIO registers: Configure GPIO for MOSI, MISO and SCK pins.
2. Write to the SPI_CR1 register:
   a) Configure the serial clock baud rate using the BR[2:0] bits (Note: 4).
   b) Configure the CPOL and CPHA bits combination to define one of the four relationships between the data transfer and the serial clock (CPHA must be cleared in NSSP mode). (Note: 2 - except the case when CRC is enabled at TI mode).
   c) Select simplex or half-duplex mode by configuring RXONLY or BIDIMODE and BIDIOE (RXONLY and BIDIMODE cannot be set at the same time).
   d) Configure the LSBFIRST bit to define the frame format (Note: 2).
   e) Configure the CRCL and CRCEN bits if CRC is needed (while SCK clock signal is at idle state).
   f) Configure SSM and SSI (Notes: 2 & 3).
   g) Configure the MSTR bit (in multimaster NSS configuration, avoid conflict state on NSS if master is configured to prevent MODF error).
3. Write to SPI_CR2 register:
   a) Configure the DS[3:0] bits to select the data length for the transfer.
   b) Configure SSOE (Notes: 1 & 2 & 3).
   c) Set the FRF bit if the TI protocol is required (keep NSSP bit cleared in TI mode).
   d) Set the NSSP bit if the NSS pulse mode between two data units is required (keep CHPA and TI bits cleared in NSSP mode).
   e) Configure the FRXTH bit. The RXFIFO threshold must be aligned to the read access size for the SPIx_DR register.
   f) Initialize LDMA_TX and LDMA_RX bits if DMA is used in packed mode.
4. Write to SPI_CRCPR register: Configure the CRC polynomial if needed.
5. Write proper DMA registers: Configure DMA streams dedicated for SPI Tx and Rx in DMA registers if the DMA streams are used.

Note: *(1) Step is not required in slave mode.*

(2) Step is not required in TI mode.

(3) Step is not required in NSSP mode.

(4) The step is not required in slave mode except slave working at TI mode

30.4.8 Procedure for enabling SPI

It is recommended to enable the SPI slave before the master sends the clock. If not, undesired data transmission might occur. The data register of the slave must already contain data to be sent before starting communication with the master (either on the first edge of the communication clock, or before the end of the ongoing communication if the clock signal is continuous). The SCK signal must be settled at an idle state level corresponding to the selected polarity before the SPI slave is enabled.

The master at full-duplex (or in any transmit-only mode) starts to communicate when the SPI is enabled and TXFIFO is not empty, or with the next write to TXFIFO.

In any master receive only mode (RXONLY = 1 or BIDIMODE = 1 & BIDIOE = 0), master starts to communicate and the clock starts running immediately after SPI is enabled.

For handling DMA, follow the dedicated section.

30.4.9 Data transmission and reception procedures

RXFIFO and TXFIFO

All SPI data transactions pass through the 32-bit embedded FIFOs. This enables the SPI to work in a continuous flow, and prevents overruns when the data frame size is short. Each direction has its own FIFO called TXFIFO and RXFIFO. These FIFOs are used in all SPI modes except for receiver-only mode (slave or master) with CRC calculation enabled (see *Section 30.4.14: CRC calculation*).

The handling of FIFOs depends on the data exchange mode (duplex, simplex), data frame format (number of bits in the frame), access size performed on the FIFO data registers (8-bit or 16-bit), and whether or not data packing is used when accessing the FIFOs (see *Section 30.4.13: TI mode*).

A read access to the SPIx_DR register returns the oldest value stored in RXFIFO that has not been read yet. A write access to the SPIx_DR stores the written data in the TXFIFO at the end of a send queue. The read access must be always aligned with the RXFIFO threshold configured by the FRXTH bit in SPIx_CR2 register. FTLVL[1:0] and FRLVL[1:0] bits indicate the current occupancy level of both FIFOs.

A read access to the SPIx_DR register must be managed by the RXNE event. This event is triggered when data is stored in RXFIFO and the threshold (defined by FRXTH bit) is reached. When RXNE is cleared, RXFIFO is considered to be empty. In a similar way, write access of a data frame to be transmitted is managed by the TXE event. This event is triggered when the TXFIFO level is less than or equal to half of its capacity. Otherwise TXE is cleared and the TXFIFO is considered as full. In this way, RXFIFO can store up to four data frames, whereas TXFIFO can only store up to three when the data frame format is not greater than 8 bits. This difference prevents possible corruption of 3x 8-bit data frames already stored in the TXFIFO when software tries to write more data in 16-bit mode into TXFIFO. Both TXE and RXNE events can be polled or handled by interrupts. See *Figure 297* through *Figure 300*.

Another way to manage the data exchange is to use DMA (see *Communication using DMA (direct memory addressing)*).

If the next data is received when the RXFIFO is full, an overrun event occurs (see description of OVR flag at *Section 30.4.10: SPI status flags*). An overrun event can be polled or handled by an interrupt.

The BSY bit being set indicates ongoing transaction of a current data frame. When the clock signal runs continuously, the BSY flag stays set between data frames at master but becomes low for a minimum duration of one SPI clock at slave between each data frame transfer.

Sequence handling

A few data frames can be passed at single sequence to complete a message. When transmission is enabled, a sequence begins and continues while any data is present in the TXFIFO of the master. The clock signal is provided continuously by the master until TXFIFO becomes empty, then it stops waiting for additional data.

In receive-only modes, half-duplex (BIDIMODE=1, BIDIOE=0) or simplex (BIDIMODE=0, RXONLY=1) the master starts the sequence immediately when both SPI is enabled and receive-only mode is activated. The clock signal is provided by the master and it does not stop until either SPI or receive-only mode is disabled by the master. The master receives data frames continuously up to this moment.

While the master can provide all the transactions in continuous mode (SCK signal is continuous) it has to respect slave capability to handle data flow and its content at anytime. When necessary, the master must slow down the communication and provide either a slower clock or separate frames or data sessions with sufficient delays. Be aware there is no underflow error signal for master or slave in SPI mode, and data from the slave is always transacted and processed by the master even if the slave could not prepare it correctly in time. It is preferable for the slave to use DMA, especially when data frames are shorter and bus rate is high.

Each sequence must be encased by the NSS pulse in parallel with the multislave system to select just one of the slaves for communication. In a single slave system it is not necessary to control the slave with NSS, but it is often better to provide the pulse here too, to synchronize the slave with the beginning of each data sequence. NSS can be managed by both software and hardware (see *Section 30.4.5: Slave select (NSS) pin management*).

When the BSY bit is set it signifies an ongoing data frame transaction. When the dedicated frame transaction is finished, the RXNE flag is raised. The last bit is just sampled and the complete data frame is stored in the RXFIFO.

Procedure for disabling the SPI

When SPI is disabled, it is mandatory to follow the disable procedures described in this paragraph. It is important to do this before the system enters a low-power mode when the peripheral clock is stopped. Ongoing transactions can be corrupted in this case. In some modes the disable procedure is the only way to stop continuous communication running.

Master in full-duplex or transmit only mode can finish any transaction when it stops providing data for transmission. In this case, the clock stops after the last data transaction. Special care must be taken in packing mode when an odd number of data frames are transacted to prevent some dummy byte exchange (refer to *Data packing* section). Before the SPI is disabled in these modes, the user must follow standard disable procedure. When

the SPI is disabled at the master transmitter while a frame transaction is ongoing or next data frame is stored in TXFIFO, the SPI behavior is not guaranteed.

When the master is in any receive only mode, the only way to stop the continuous clock is to disable the peripheral by SPE=0. This must occur in specific time window within last data frame transaction just between the sampling time of its first bit and before its last bit transfer starts (in order to receive a complete number of expected data frames and to prevent any additional “dummy” data reading after the last valid data frame). Specific procedure must be followed when disabling SPI in this mode.

Data received but not read remains stored in RXFIFO when the SPI is disabled, and must be processed the next time the SPI is enabled, before starting a new sequence. To prevent having unread data, ensure that RXFIFO is empty when disabling the SPI, by using the correct disabling procedure, or by initializing all the SPI registers with a software reset via the control of a specific register dedicated to peripheral reset (see the SPIiRST bits in the RCC_APBiRSTR registers).

Standard disable procedure is based on pulling BSY status together with FTLVL[1:0] to check if a transmission session is fully completed. This check can be done in specific cases, too, when it is necessary to identify the end of ongoing transactions, for example:

- When NSS signal is managed by software and master has to provide proper end of NSS pulse for slave, or
- When transactions’ streams from DMA or FIFO are completed while the last data frame or CRC frame transaction is still ongoing in the peripheral bus.

The correct disable procedure is (except when receive only mode is used):

1. Wait until FTLVL[1:0] = 00 (no more data to transmit).
2. Wait until BSY=0 (the last data frame is processed).
3. Disable the SPI (SPE=0).
4. Read data until FRLVL[1:0] = 00 (read all the received data).

The correct disable procedure for certain receive only modes is:

1. Interrupt the receive flow by disabling SPI (SPE=0) in the specific time window while the last data frame is ongoing.
2. Wait until BSY=0 (the last data frame is processed).
3. Read data until FRLVL[1:0] = 00 (read all the received data).

Note: If packing mode is used and an odd number of data frames with a format less than or equal to 8 bits (fitting into one byte) has to be received, FRXTH must be set when FRLVL[1:0] = 01, in order to generate the RXNE event to read the last odd data frame and to keep good FIFO pointer alignment.

Data packing

When the data frame size fits into one byte (less than or equal to 8 bits), data packing is used automatically when any read or write 16-bit access is performed on the SPIx_DR register. The double data frame pattern is handled in parallel in this case. At first, the SPI operates using the pattern stored in the LSB of the accessed word, then with the other half stored in the MSB. *Figure 296* provides an example of data packing mode sequence handling. Two data frames are sent after the single 16-bit access the SPIx_DR register of the transmitter. This sequence can generate just one RXNE event in the receiver if the RXFIFO threshold is set to 16 bits (FRXTH=0). The receiver then has to access both data frames by a single 16-bit read of SPIx_DR as a response to this single RXNE event. The

RxFIFO threshold setting and the following read access must be always kept aligned at the receiver side, as data can be lost if it is not in line.

A specific problem appears if an odd number of such “fit into one byte” data frames must be handled. On the transmitter side, writing the last data frame of any odd sequence with an 8-bit access to SPIx_DR is enough. The receiver has to change the Rx_FIFO threshold level for the last data frame received in the odd sequence of frames in order to generate the RXNE event.

Figure 296. Packing data in FIFO for transmission and reception

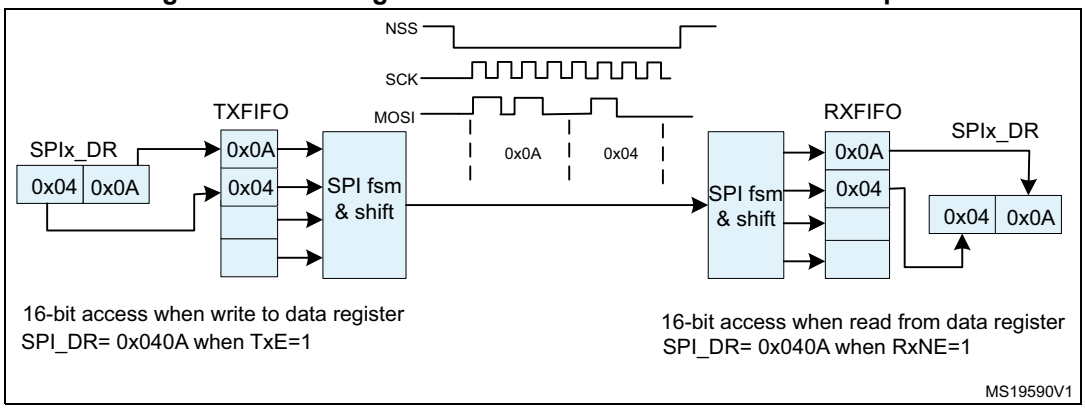

Communication using DMA (direct memory addressing)

To operate at its maximum speed and to facilitate the data register read/write process required to avoid overrun, the SPI features a DMA capability, which implements a simple request/acknowledge protocol.

A DMA access is requested when the TXDMAEN or RXDMAEN enable bit in the SPIx_CR2 register is set. Separate requests must be issued to the Tx and Rx buffers.

- In transmission, a DMA request is issued each time TXE is set to 1. The DMA then writes to the SPIx_DR register.
- In reception, a DMA request is issued each time RXNE is set to 1. The DMA then reads the SPIx_DR register.

See *Figure 297* through *Figure 300*.

When the SPI is used only to transmit data, it is possible to enable only the SPI Tx DMA channel. In this case, the OVR flag is set because the data received is not read. When the SPI is used only to receive data, it is possible to enable only the SPI Rx DMA channel.

In transmission mode, when the DMA has written all the data to be transmitted (the TCIF flag is set in the DMA_ISR register), the BSY flag can be monitored to ensure that the SPI communication is complete. This is required to avoid corrupting the last transmission before disabling the SPI or entering the Stop mode. The software must first wait until FTLVL[1:0]=00 and then until BSY=0.

When starting communication using DMA, to prevent DMA channel management raising error events, these steps must be followed in order:

1. Enable DMA Rx buffer in the RXDMAEN bit in the SPI_CR2 register, if DMA Rx is used.
2. Enable DMA streams for Tx and Rx in DMA registers, if the streams are used.
3. Enable DMA Tx buffer in the TXDMAEN bit in the SPI_CR2 register, if DMA Tx is used.
4. Enable the SPI by setting the SPE bit.

To close communication it is mandatory to follow these steps in order:

1. Disable DMA streams for Tx and Rx in the DMA registers, if the streams are used.
2. Disable the SPI by following the SPI disable procedure.
3. Disable DMA Tx and Rx buffers by clearing the TXDMAEN and RXDMAEN bits in the SPI_CR2 register, if DMA Tx and/or DMA Rx are used.

Packing with DMA

If the transfers are managed by DMA (TXDMAEN and RXDMAEN set in the SPIx_CR2 register) packing mode is enabled/disabled automatically depending on the PSIZE value configured for SPI TX and the SPI RX DMA channel. If the DMA channel PSIZE value is equal to 16-bit and SPI data size is less than or equal to 8-bit, then packing mode is enabled. The DMA then automatically manages the write operations to the SPIx_DR register.

If data packing mode is used and the number of data to transfer is not a multiple of two, the LDMA_TX/LDMA_RX bits must be set. The SPI then considers only one data for the transmission or reception to serve the last DMA transfer (for more details refer to *Data packing on page 987*.)

Communication diagrams

Some typical timing schemes are explained in this section. These schemes are valid no matter if the SPI events are handled by polling, interrupts or DMA. For simplicity, the LSBFIRST=0, CPOL=0 and CPHA=1 setting is used as a common assumption here. No complete configuration of DMA streams is provided.

The following numbered notes are common for *Figure 297 on page 991* through *Figure 300 on page 994*:

1. The slave starts to control MISO line as NSS is active and SPI is enabled, and is disconnected from the line when one of them is released. Sufficient time must be provided for the slave to prepare data dedicated to the master in advance before its transaction starts.
   At the master, the SPI peripheral takes control at MOSI and SCK signals (occasionally at NSS signal as well) only if SPI is enabled. If SPI is disabled the SPI peripheral is disconnected from GPIO logic, so the levels at these lines depends on GPIO setting exclusively.
2. At the master, BSY stays active between frames if the communication (clock signal) is continuous. At the slave, BSY signal always goes down for at least one clock cycle between data frames.
3. The TXE signal is cleared only if TXFIFO is full.
4. The DMA arbitration process starts just after the TXDMAEN bit is set. The TXE interrupt is generated just after the TXEIE is set. As the TXE signal is at an active level, data transfers to TxFIFO start, until TxFIFO becomes full or the DMA transfer completes.
5. If all the data to be sent can fit into TxFIFO, the DMA Tx TCIF flag can be raised even before communication on the SPI bus starts. This flag always rises before the SPI transaction is completed.
6. The CRC value for a package is calculated continuously frame by frame in the SPIx_TXCRCR and SPIx_RXCRCR registers. The CRC information is processed after the entire data package has completed, either automatically by DMA (Tx channel must be set to the number of data frames to be processed) or by SW (the user must handle CRCNEXT bit during the last data frame processing).
   While the CRC value calculated in SPIx_TXCRCR is simply sent out by transmitter, received CRC information is loaded into RxFIFO and then compared with the SPIx_RXCRCR register content (CRC error flag can be raised here if any difference). This is why the user must take care to flush this information from the FIFO, either by software reading out all the stored content of RxFIFO, or by DMA when the proper number of data frames is preset for Rx channel (number of data frames + number of CRC frames) (see the settings at the example assumption).
7. In data packed mode, TxE and RxNE events are paired and each read/write access to the FIFO is 16 bits wide until the number of data frames are even. If the TxFIFO is ¾ full FTLVL status stays at FIFO full level. That is why the last odd data frame cannot be stored before the TxFIFO becomes ½ full. This frame is stored into TxFIFO with an 8-bit access either by software or automatically by DMA when LDMA_TX control is set.
8. To receive the last odd data frame in packed mode, the Rx threshold must be changed to 8-bit when the last data frame is processed, either by software setting FRXTH=1 or automatically by a DMA internal signal when LDMA_RX is set.

Figure 297. Master full-duplex communication

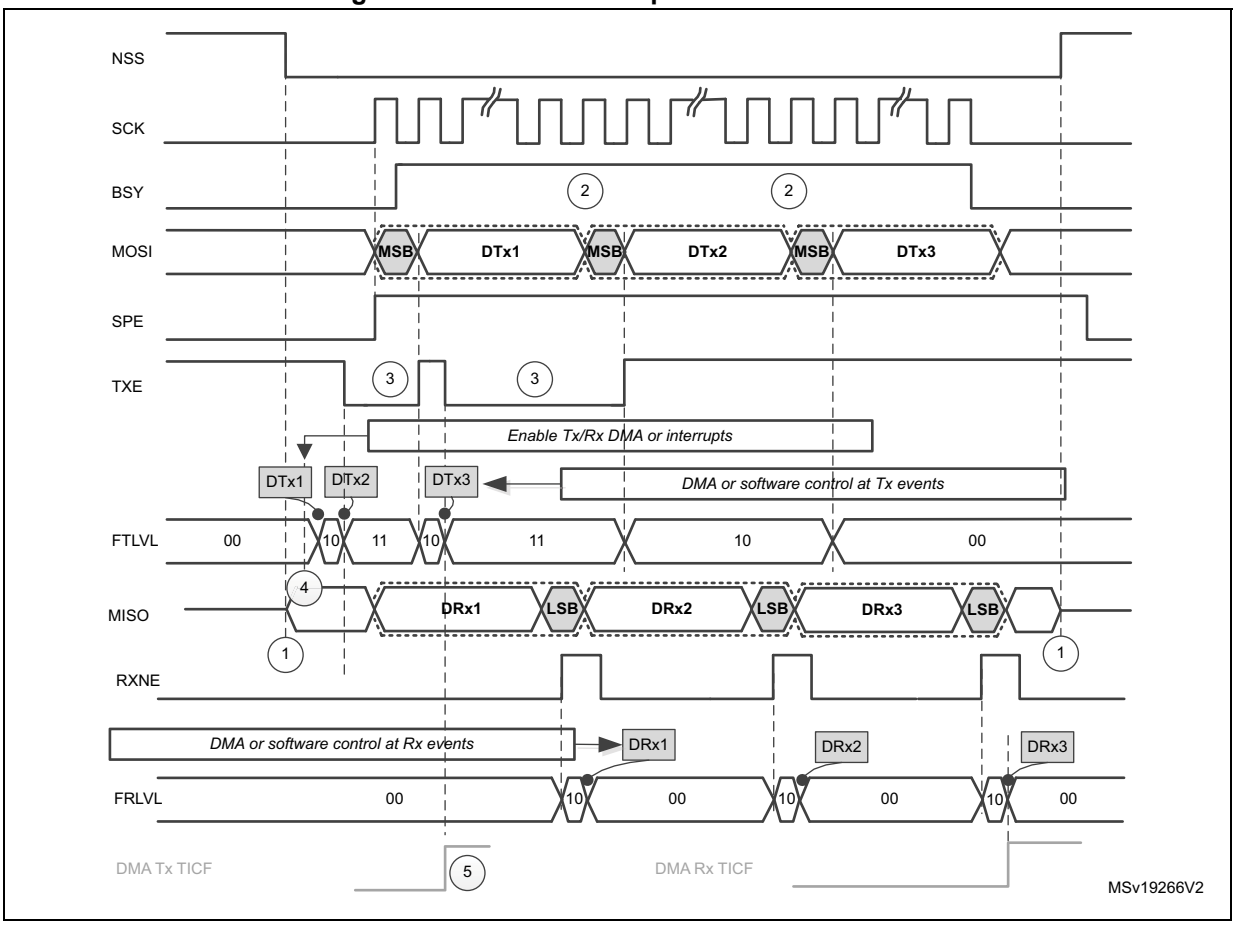

Assumptions for master full-duplex communication example:

- Data size > 8 bit

If DMA is used:

- Number of Tx frames transacted by DMA is set to 3
- Number of Rx frames transacted by DMA is set to 3

See also : *Communication diagrams on page 990* for details about common assumptions and notes.

Figure 298. Slave full-duplex communication

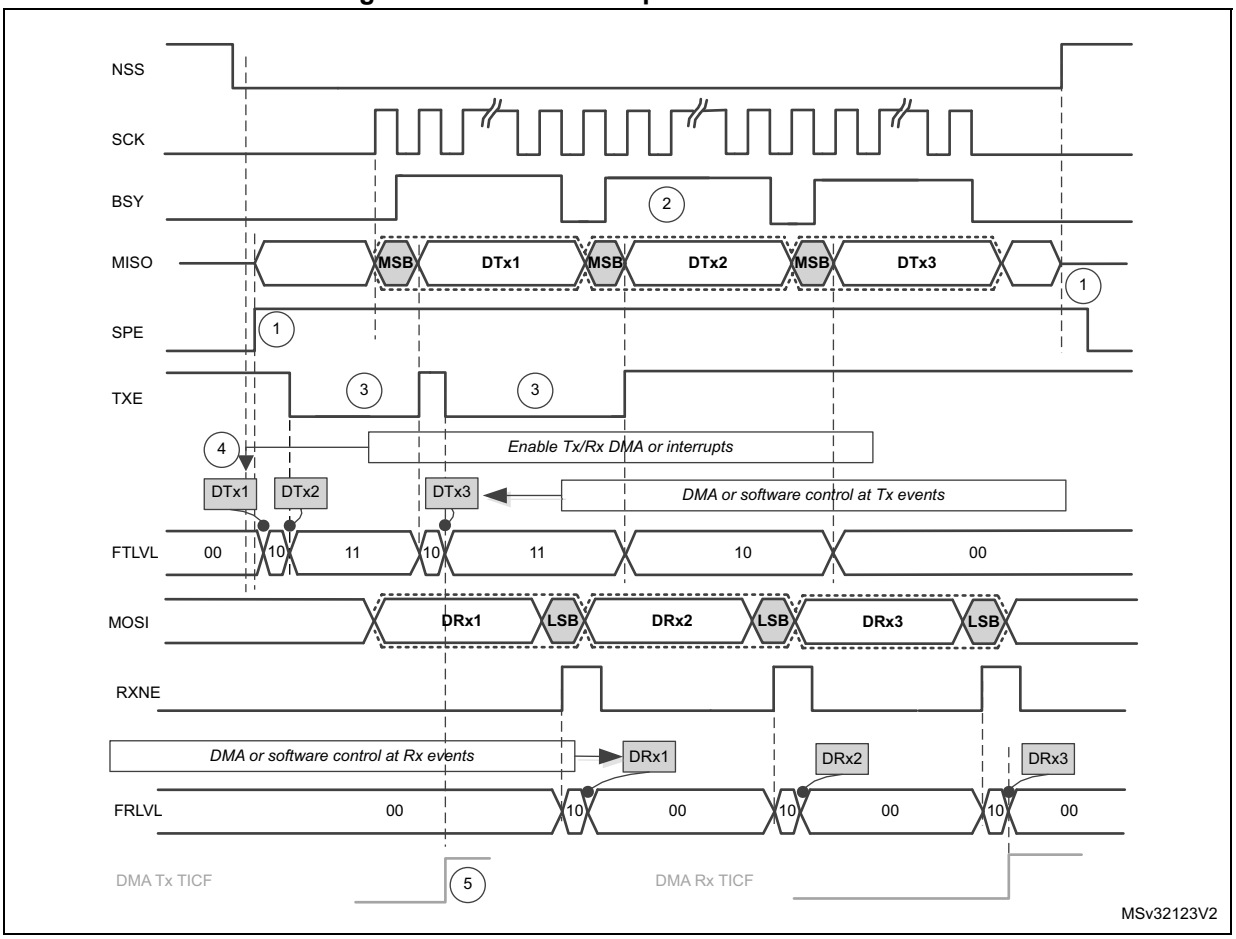

Assumptions for slave full-duplex communication example:

- Data size > 8 bit

If DMA is used:

- Number of Tx frames transacted by DMA is set to 3
- Number of Rx frames transacted by DMA is set to 3

See also *Communication diagrams on page 990* for details about common assumptions and notes.

Figure 299. Master full-duplex communication with CRC

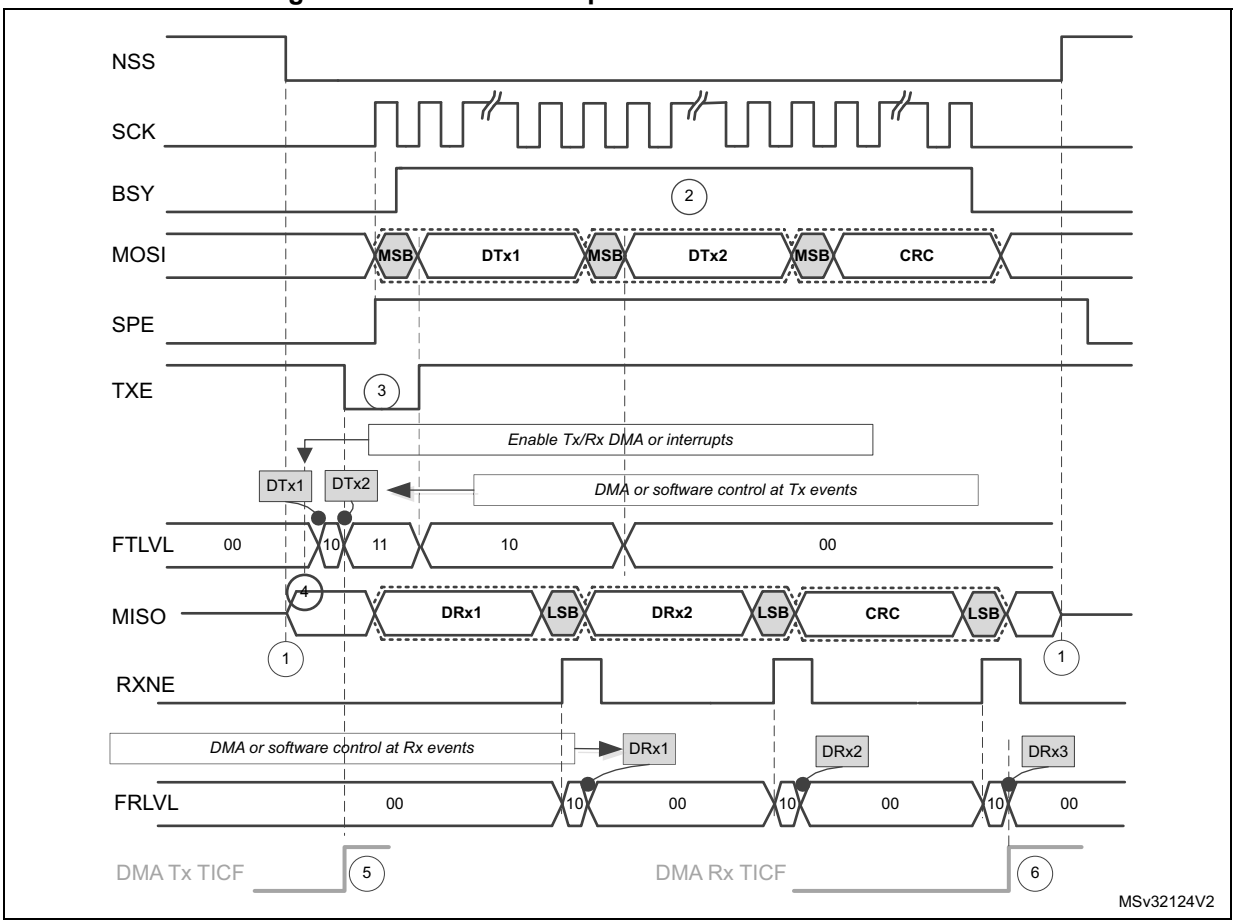

Assumptions for master full-duplex communication with CRC example:

- Data size = 16 bit
- CRC enabled

If DMA is used:

- Number of Tx frames transacted by DMA is set to 2
- Number of Rx frames transacted by DMA is set to 3

See also : *Communication diagrams on page 990* for details about common assumptions and notes.

Figure 300. Master full-duplex communication in packed mode

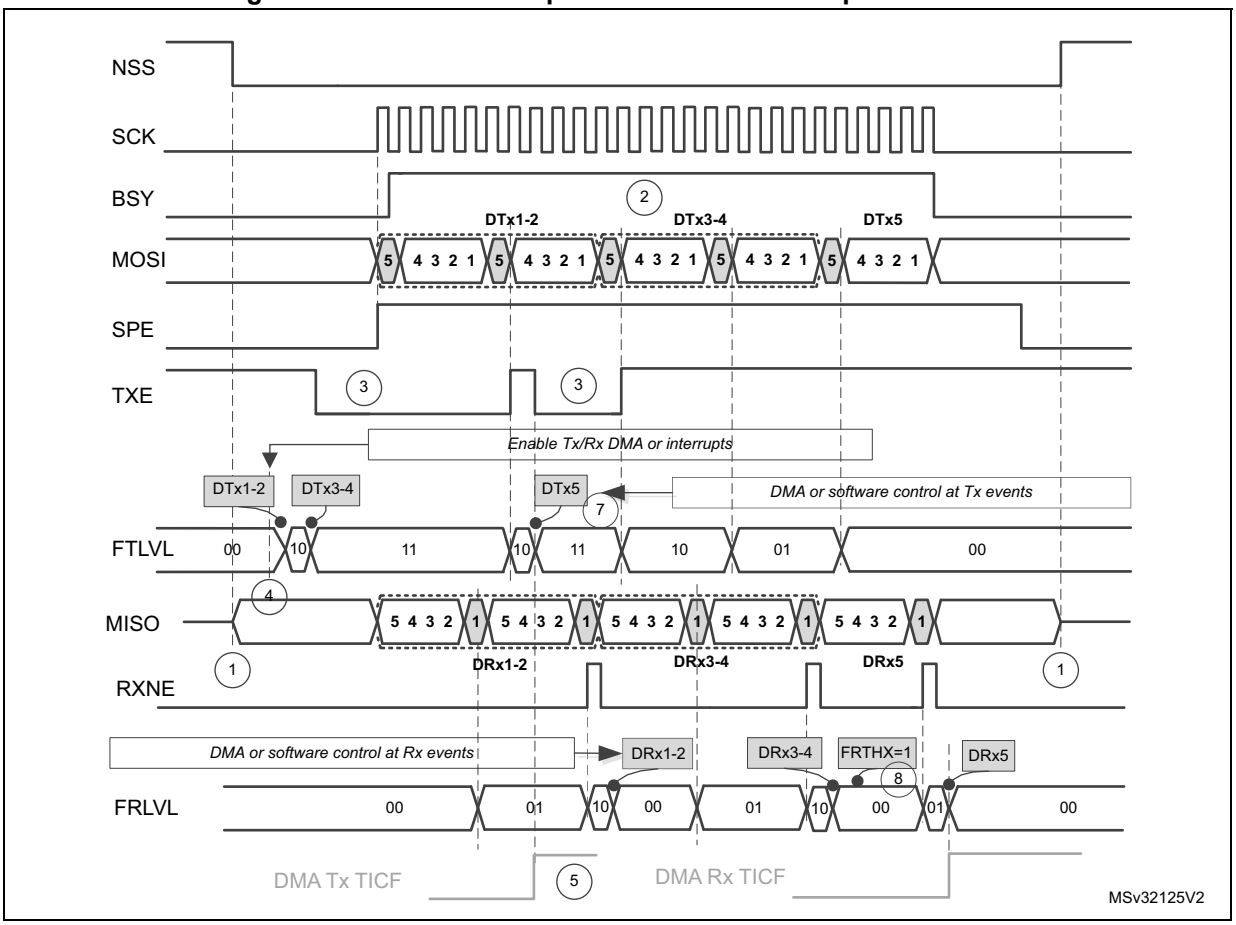

Assumptions for master full-duplex communication in packed mode example:

- Data size = 5 bit
- Read/write FIFO is performed mostly by 16-bit access
- FRXTH=0

If DMA is used:

- Number of Tx frames to be transacted by DMA is set to 3
- Number of Rx frames to be transacted by DMA is set to 3
- PSIZE for both Tx and Rx DMA channel is set to 16-bit
- LDMA_TX=1 and LDMA_RX=1

See also *: Communication diagrams on page 990* for details about common assumptions and notes.

30.4.10 SPI status flags

Three status flags are provided for the application to completely monitor the state of the SPI bus.

Tx buffer empty flag (TXE)

The TXE flag is set when transmission TXFIFO has enough space to store data to send. TXE flag is linked to the TXFIFO level. The flag goes high and stays high until the TXFIFO level is lower or equal to 1/2 of the FIFO depth. An interrupt can be generated if the TXEIE bit in the SPIx_CR2 register is set. The bit is cleared automatically when the TXFIFO level becomes greater than 1/2.

Rx buffer not empty (RXNE)

The RXNE flag is set depending on the FRXTH bit value in the SPIx_CR2 register:

- If FRXTH is set, RXNE goes high and stays high until the RXFIFO level is greater or equal to 1/4 (8-bit).
- If FRXTH is cleared, RXNE goes high and stays high until the RXFIFO level is greater than or equal to 1/2 (16-bit).

An interrupt can be generated if the RXNEIE bit in the SPIx_CR2 register is set.

The RXNE is cleared by hardware automatically when the above conditions are no longer true.

Busy flag (BSY)

The BSY flag is set and cleared by hardware (writing to this flag has no effect).

When BSY is set, it indicates that a data transfer is in progress on the SPI (the SPI bus is busy).

The BSY flag can be used in certain modes to detect the end of a transfer so that the software can disable the SPI or its peripheral clock before entering a low-power mode which does not provide a clock for the peripheral. This avoids corrupting the last transfer.

The BSY flag is also useful for preventing write collisions in a multimaster system.

The BSY flag is cleared under any one of the following conditions:

- When the SPI is correctly disabled
- When a fault is detected in Master mode (MODF bit set to 1)
- In Master mode, when it finishes a data transmission and no new data is ready to be sent
- In Slave mode, when the BSY flag is set to '0' for at least one SPI clock cycle between each data transfer.

Note: When the next transmission can be handled immediately by the master (e.g. if the master is in Receive-only mode or its Transmit FIFO is not empty), communication is continuous and the BSY flag remains set to '1' between transfers on the master side. Although this is not the case with a slave, it is recommended to use always the TXE and RXNE flags (instead of the BSY flags) to handle data transmission or reception operations.

30.4.11 SPI error flags

An SPI interrupt is generated if one of the following error flags is set and interrupt is enabled by setting the ERRIE bit.

Overrun flag (OVR)

An overrun condition occurs when data is received by a master or slave and the RXFIFO has not enough space to store this received data. This can happen if the software or the DMA did not have enough time to read the previously received data (stored in the RXFIFO) or when space for data storage is limited e.g. the RXFIFO is not available when CRC is enabled in receive only mode so in this case the reception buffer is limited into a single data frame buffer (see *Section 30.4.14: CRC calculation*).

When an overrun condition occurs, the newly received value does not overwrite the previous one in the RXFIFO. The newly received value is discarded and all data transmitted subsequently is lost. Clearing the OVR bit is done by a read access to the SPI_DR register followed by a read access to the SPI_SR register.

Mode fault (MODF)

Mode fault occurs when the master device has its internal NSS signal (NSS pin in NSS hardware mode, or SSI bit in NSS software mode) pulled low. This automatically sets the MODF bit. Master mode fault affects the SPI interface in the following ways:

- The MODF bit is set and an SPI interrupt is generated if the ERRIE bit is set.
- The SPE bit is cleared. This blocks all output from the device and disables the SPI interface.
- The MSTR bit is cleared, thus forcing the device into slave mode.

Use the following software sequence to clear the MODF bit:

1. Make a read or write access to the SPIx_SR register while the MODF bit is set.
2. Then write to the SPIx_CR1 register.

To avoid any multiple slave conflicts in a system comprising several MCUs, the NSS pin must be pulled high during the MODF bit clearing sequence. The SPE and MSTR bits can be restored to their original state after this clearing sequence. As a security, hardware does not allow the SPE and MSTR bits to be set while the MODF bit is set. In a slave device the MODF bit cannot be set except as the result of a previous multimaster conflict.

CRC error (CRCERR)

This flag is used to verify the validity of the value received when the CRCEN bit in the SPIx_CR1 register is set. The CRCERR flag in the SPIx_SR register is set if the value received in the shift register does not match the receiver SPIx_RXCRCR value. The flag is cleared by the software.

TI mode frame format error (FRE)

A TI mode frame format error is detected when an NSS pulse occurs during an ongoing communication when the SPI is operating in slave mode and configured to conform to the TI mode protocol. When this error occurs, the FRE flag is set in the SPIx_SR register. The SPI is not disabled when an error occurs, the NSS pulse is ignored, and the SPI waits for the next NSS pulse before starting a new transfer. The data may be corrupted since the error detection may result in the loss of two data bytes.

The FRE flag is cleared when SPIx_SR register is read. If the ERRIE bit is set, an interrupt is generated on the NSS error detection. In this case, the SPI should be disabled because data consistency is no longer guaranteed and communications should be reinitiated by the master when the slave SPI is enabled again.

30.4.12 NSS pulse mode

This mode is activated by the NSSP bit in the SPIx_CR2 register and it takes effect only if the SPI interface is configured as Motorola SPI master (FRF=0) with capture on the first edge (SPIx_CR1 CPHA = 0, CPOL setting is ignored). When activated, an NSS pulse is generated between two consecutive data frame transfers when NSS stays at high level for the duration of one clock period at least. This mode allows the slave to latch data. NSSP pulse mode is designed for applications with a single master-slave pair.

Figure 301 illustrates NSS pin management when NSSP pulse mode is enabled.

Figure 301. NSSP pulse generation in Motorola SPI master mode

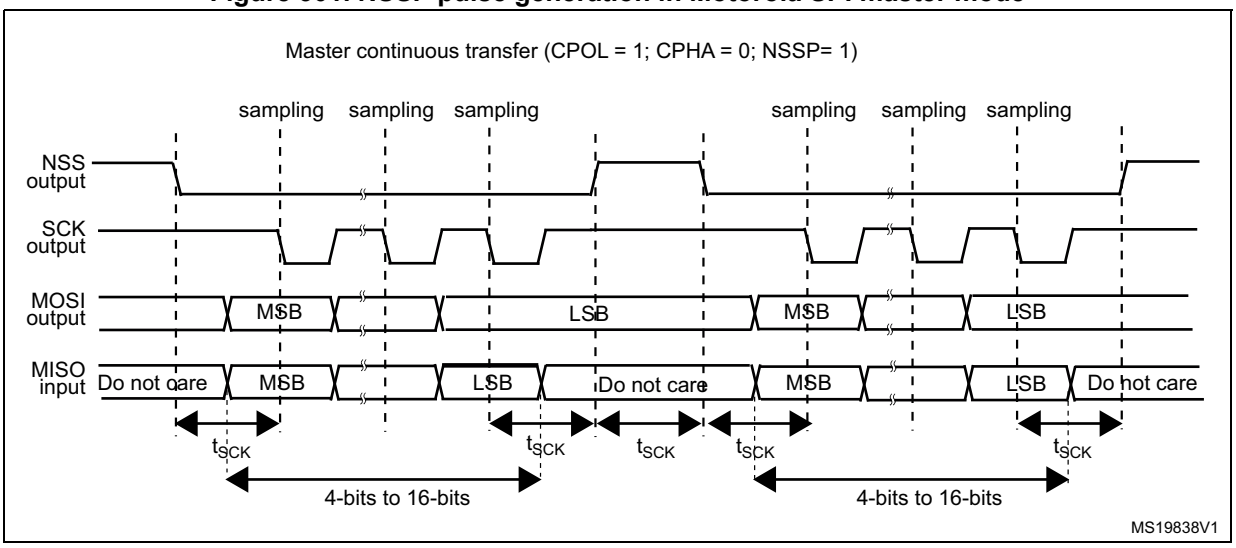

Note: Similar behavior is encountered when CPOL = 0. In this case the sampling edge is the *rising* edge of SCK, and NSS assertion and deassertion refer to this sampling edge.

30.4.13 TI mode

TI protocol in master mode

The SPI interface is compatible with the TI protocol. The FRF bit of the SPIx_CR2 register can be used to configure the SPI to be compliant with this protocol.

The clock polarity and phase are forced to conform to the TI protocol requirements whatever the values set in the SPIx_CR1 register. NSS management is also specific to the TI protocol which makes the configuration of NSS management through the SPIx_CR1 and SPIx_CR2 registers (SSM, SSI, SSOE) impossible in this case.

In slave mode, the SPI baud rate prescaler is used to control the moment when the MISO pin state changes to HiZ when the current transaction finishes (see *Figure 302*). Any baud rate can be used, making it possible to determine this moment with optimal flexibility. However, the baud rate is generally set to the external master clock baud rate. The delay for the MISO signal to become HiZ ($t_{release}$) depends on internal resynchronization and on the

baud rate value set in through the BR[2:0] bits in the SPIx_CR1 register. It is given by the formula:

$$\frac{t_{baud_rate}}{2} + 4 \times t_{pclk} < t_{release} < \frac{t_{baud_rate}}{2} + 6 \times t_{pclk}$$

If the slave detects a misplaced NSS pulse during a data frame transaction the TIFRE flag is set.

If the data size is equal to 4-bits or 5-bits, the master in full-duplex mode or transmit-only mode uses a protocol with one more dummy data bit added after LSB. TI NSS pulse is generated above this dummy bit clock cycle instead of the LSB in each period.

This feature is not available for Motorola SPI communications (FRF bit set to 0).

Figure 302: TI mode transfer shows the SPI communication waveforms when TI mode is selected.

Figure 302. TI mode transfer

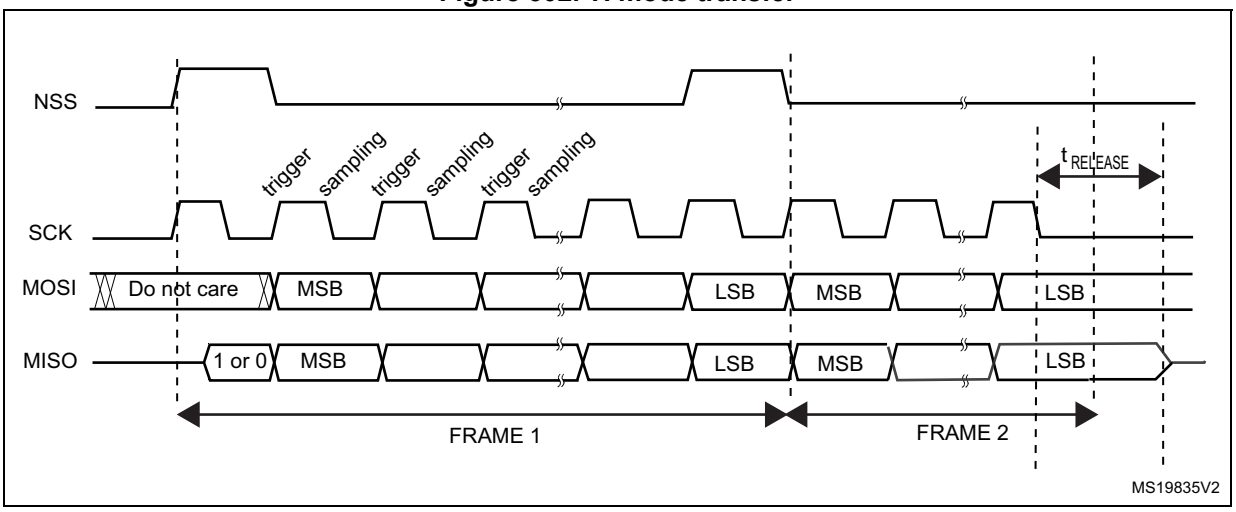

30.4.14 CRC calculation

Two separate CRC calculators are implemented in order to check the reliability of transmitted and received data. The SPI offers CRC8 or CRC16 calculation independently of the frame data length, which can be fixed to 8-bit or 16-bit. For all the other data frame lengths, no CRC is available.

CRC principle

CRC calculation is enabled by setting the CRCEN bit in the SPIx_CR1 register before the SPI is enabled (SPE = 1). The CRC value is calculated using an odd programmable polynomial on each bit. The calculation is processed on the sampling clock edge defined by the CPHA and CPOL bits in the SPIx_CR1 register. The calculated CRC value is checked automatically at the end of the data block as well as for transfer managed by CPU or by the DMA. When a mismatch is detected between the CRC calculated internally on the received data and the CRC sent by the transmitter, a CRCERR flag is set to indicate a data corruption error. The right procedure for handling the CRC calculation depends on the SPI configuration and the chosen transfer management.

Note: The polynomial value should only be odd. No even values are supported.

CRC transfer managed by CPU

Communication starts and continues normally until the last data frame has to be sent or received in the SPIx_DR register. Then CRCNEXT bit has to be set in the SPIx_CR1 register to indicate that the CRC frame transaction follows after the transaction of the currently processed data frame. The CRCNEXT bit must be set before the end of the last data frame transaction. CRC calculation is frozen during CRC transaction.

The received CRC is stored in the RXFIFO like a data byte or word. That is why in CRC mode only, the reception buffer has to be considered as a single 16-bit buffer used to receive only one data frame at a time.

A CRC-format transaction usually takes one more data frame to communicate at the end of data sequence. However, when setting an 8-bit data frame checked by 16-bit CRC, two more frames are necessary to send the complete CRC.

When the last CRC data is received, an automatic check is performed comparing the received value and the value in the SPIx_RXCRC register. Software has to check the CRCERR flag in the SPIx_SR register to determine if the data transfers were corrupted or not. Software clears the CRCERR flag by writing '0' to it.

After the CRC reception, the CRC value is stored in the RXFIFO and must be read in the SPIx_DR register in order to clear the RXNE flag.

CRC transfer managed by DMA

When SPI communication is enabled with CRC communication and DMA mode, the transmission and reception of the CRC at the end of communication is automatic (with the exception of reading CRC data in receive only mode). The CRCNEXT bit does not have to be handled by the software. The counter for the SPI transmission DMA channel has to be set to the number of data frames to transmit excluding the CRC frame. On the receiver side, the received CRC value is handled automatically by DMA at the end of the transaction but user must take care to flush out received CRC information from RXFIFO as it is always loaded into it. In full-duplex mode, the counter of the reception DMA channel can be set to the number of data frames to receive including the CRC, which means, for example, in the specific case of an 8-bit data frame checked by 16-bit CRC:

DMA_RX = Numb_of_data + 2

In receive only mode, the DMA reception channel counter should contain only the amount of data transferred, excluding the CRC calculation. Then based on the complete transfer from DMA, all the CRC values must be read back by software from FIFO as it works as a single buffer in this mode.

At the end of the data and CRC transfers, the CRCERR flag in the SPIx_SR register is set if corruption occurred during the transfer.

If packing mode is used, the LDMA_RX bit needs managing if the number of data is odd.

Resetting the SPIx_TXCRC and SPIx_RXCRC values

The SPIx_TXCRC and SPIx_RXCRC values are cleared automatically when new data is sampled after a CRC phase. This allows the use of DMA circular mode (not available in receive-only mode) in order to transfer data without any interruption, (several data blocks covered by intermediate CRC checking phases).

If the SPI is disabled during a communication the following sequence must be followed:

1. Disable the SPI
2. Clear the CRCEN bit
3. Enable the CRCEN bit
4. Enable the SPI

Note: When the SPI interface is configured as a slave, the NSS internal signal needs to be kept low during transaction of the CRC phase once the CRCNEXT signal is released. That is why the CRC calculation cannot be used at NSS Pulse mode when NSS hardware mode should be applied at slave normally.

At TI mode, despite the fact that clock phase and clock polarity setting is fixed and independent on SPIx_CR1 register, the corresponding setting CPOL=0 CPHA=1 has to be kept at the SPIx_CR1 register anyway if CRC is applied. In addition, the CRC calculation has to be reset between sessions by SPI disable sequence with re-enable the CRCEN bit described above at both master and slave side, else CRC calculation can be corrupted at this specific mode.

30.5 SPI interrupts

During SPI communication an interrupt can be generated by the following events:

- Transmit TXFIFO ready to be loaded
- Data received in Receive RXFIFO
- Master mode fault
- Overrun error
- TI frame format error
- CRC protocol error

Interrupts can be enabled and disabled separately.

Table 195. SPI interrupt requests

Interrupt event	Event flag	Enable Control bit
Transmit TXFIFO ready to be loaded	TXE	TXEIE
Data received in RXFIFO	RXNE	RXNEIE
Master Mode fault event	MODF	ERRIE
Overrun error	OVR	
TI frame format error	FRE	
CRC protocol error	CRCERR	

30.6 SPI registers

The peripheral registers can be accessed by half-words (16-bit) or words (32-bit). SPI_DR in addition can be accessed by 8-bit access.

30.6.1 SPI control register 1 (SPIx_CR1)

Address offset: 0x00

Reset value: 0x0000

15	14	13	12	11	10	9	8	7	6	5	4	3	2	1	0
BIDI MODE	BIDIOE	CRC EN	CRCN EXT	CRCL	RX ONLY	SSM	SSI	LSB FIRST	SPE	BR[2:0]			MSTR	CPOL	CPHA
rw	rw	rw	rw	rw	rw	rw	rw	rw	rw	rw	rw	rw	rw	rw	rw

Bit 15 **BIDIMODE:** Bidirectional data mode enable.

This bit enables half-duplex communication using common single bidirectional data line. Keep RXONLY bit clear when bidirectional mode is active.

0: 2-line unidirectional data mode selected

1: 1-line bidirectional data mode selected

Bit 14 **BIDIOE:** Output enable in bidirectional mode

This bit combined with the BIDIMODE bit selects the direction of transfer in bidirectional mode.

0: Output disabled (receive-only mode)

1: Output enabled (transmit-only mode)

Note: In master mode, the MOSI pin is used and in slave mode, the MISO pin is used.

Bit 13 **CRCEN:** Hardware CRC calculation enable

0: CRC calculation disabled

1: CRC calculation enabled

Note: This bit should be written only when SPI is disabled (SPE = '0') for correct operation.

Bit 12 **CRCNEXT:** Transmit CRC next

0: Next transmit value is from Tx buffer.

1: Next transmit value is from Tx CRC register.

Note: This bit has to be written as soon as the last data is written in the SPIx_DR register.

Bit 11 **CRCL:** CRC length

This bit is set and cleared by software to select the CRC length.

0: 8-bit CRC length

1: 16-bit CRC length

Note: This bit should be written only when SPI is disabled (SPE = '0') for correct operation.

Bit 10 **RXONLY:** Receive only mode enabled.

This bit enables simplex communication using a single unidirectional line to receive data exclusively. Keep BIDIMODE bit clear when receive only mode is active.This bit is also useful in a multislave system in which this particular slave is not accessed, the output from the accessed slave is not corrupted.

0: Full-duplex (Transmit and receive)

1: Output disabled (Receive-only mode)

Bit 9 **SSM:** Software slave management

When the SSM bit is set, the NSS pin input is replaced with the value from the SSI bit.

0: Software slave management disabled

1: Software slave management enabled

Note: This bit is not used in SPI TI mode.

Bit 8 **SSI:** Internal slave select

This bit has an effect only when the SSM bit is set. The value of this bit is forced onto the NSS pin and the I/O value of the NSS pin is ignored.

Note: This bit is not used in SPI TI mode.

Bit 7 **LSBFIRST***:* Frame format

0: data is transmitted / received with the MSB first

1: data is transmitted / received with the LSB first

Note: 1. This bit should not be changed when communication is ongoing.

2. This bit is not used in SPI TI mode.

Bit 6 **SPE:** SPI enable

0: Peripheral disabled

1: Peripheral enabled

Note: When disabling the SPI, follow the procedure described in Procedure for disabling the SPI on page 986.

Bits 5:3 **BR[2:0]:** Baud rate control

000: $f_{PCLK}/2$

001: $f_{PCLK}/4$

010: $f_{PCLK}/8$

011: $f_{PCLK}/16$

100: $f_{PCLK}/32$

101: $f_{PCLK}/64$

110: $f_{PCLK}/128$

111: $f_{PCLK}/256$

Note: These bits should not be changed when communication is ongoing.

Bit 2 **MSTR:** Master selection

0: Slave configuration

1: Master configuration

Note: This bit should not be changed when communication is ongoing.

Bit 1 **CPOL:** Clock polarity

0: CK to 0 when idle

1: CK to 1 when idle

Note: This bit should not be changed when communication is ongoing.

This bit is not used in SPI TI mode except the case when CRC is applied at TI mode.

Bit 0 **CPHA:** Clock phase

0: The first clock transition is the first data capture edge

1: The second clock transition is the first data capture edge

Note: This bit should not be changed when communication is ongoing.

This bit is not used in SPI TI mode except the case when CRC is applied at TI mode.

30.6.2 SPI control register 2 (SPIx_CR2)

Address offset: 0x04

Reset value: 0x0700

15	14	13	12	11	10	9	8	7	6	5	4	3	2	1	0
Res.	LDMA_TX	LDMA_RX	FRXTH	DS[3:0]				TXEIE	RXNEIE	ERRIE	FRF	NSSP	SSOE	TXDMAEN	RXDMAEN
	rw	rw	rw	rw	rw	rw	rw	rw	rw	rw	rw	rw	rw	rw	rw

Bit 15 Reserved, must be kept at reset value.

Bit 14 **LDMA_TX:** Last DMA transfer for transmission

This bit is used in data packing mode, to define if the total number of data to transmit by DMA is odd or even. It has significance only if the TXDMAEN bit in the SPIx_CR2 register is set and if packing mode is used (data length =< 8-bit and write access to SPIx_DR is 16-bit wide). It has to be written when the SPI is disabled (SPE = 0 in the SPIx_CR1 register).

0: Number of data to transfer is even

1: Number of data to transfer is odd

Note: Refer to Procedure for disabling the SPI on page 986 if the CRCEN bit is set.

Bit 13 **LDMA_RX**: Last DMA transfer for reception

This bit is used in data packing mode, to define if the total number of data to receive by DMA is odd or even. It has significance only if the RXDMAEN bit in the SPIx_CR2 register is set and if packing mode is used (data length =< 8-bit and write access to SPIx_DR is 16-bit wide). It has to be written when the SPI is disabled (SPE = 0 in the SPIx_CR1 register).

0: Number of data to transfer is even

1: Number of data to transfer is odd

Note: Refer to Procedure for disabling the SPI on page 986 if the CRCEN bit is set.

Bit 12 **FRXTH**: FIFO reception threshold

This bit is used to set the threshold of the RXFIFO that triggers an RXNE event

0: RXNE event is generated if the FIFO level is greater than or equal to 1/2 (16-bit)

1: RXNE event is generated if the FIFO level is greater than or equal to 1/4 (8-bit)

Bits 11:8 **DS[3:0]**: Data size

These bits configure the data length for SPI transfers.

0000: Not used
0001: Not used
0010: Not used
0011: 4-bit
0100: 5-bit
0101: 6-bit
0110: 7-bit
0111: 8-bit
1000: 9-bit
1001: 10-bit
1010: 11-bit
1011: 12-bit
1100: 13-bit
1101: 14-bit
1110: 15-bit
1111: 16-bit

If software attempts to write one of the “Not used” values, they are forced to the value “0111” (8-bit)

Bit 7 **TXEIE:** Tx buffer empty interrupt enable

0: TXE interrupt masked
1: TXE interrupt not masked. Used to generate an interrupt request when the TXE flag is set.

Bit 6 **RXNEIE:** RX buffer not empty interrupt enable

0: RXNE interrupt masked
1: RXNE interrupt not masked. Used to generate an interrupt request when the RXNE flag is set.

Bit 5 **ERRIE:** Error interrupt enable

This bit controls the generation of an interrupt when an error condition occurs (CRCERR, OVR, MODF in SPI mode, FRE at TI mode).

0: Error interrupt is masked
1: Error interrupt is enabled

Bit 4 **FRF**: Frame format

0: SPI Motorola mode
1 SPI TI mode

Note: This bit must be written only when the SPI is disabled (SPE=0).

Bit 3 **NSSP**: NSS pulse management

This bit is used in master mode only. it allows the SPI to generate an NSS pulse between two consecutive data when doing continuous transfers. In the case of a single data transfer, it forces the NSS pin high level after the transfer.

It has no meaning if CPHA = ’1’, or FRF = ’1’.

0: No NSS pulse
1: NSS pulse generated

Note: 1. This bit must be written only when the SPI is disabled (SPE=0).
2. This bit is not used in SPI TI mode.

Bit 2 **SSOE:** SS output enable

0: SS output is disabled in master mode and the SPI interface can work in multimaster configuration

1: SS output is enabled in master mode and when the SPI interface is enabled. The SPI interface cannot work in a multimaster environment.

Note: This bit is not used in SPI TI mode.

Bit 1 **TXDMAEN:** Tx buffer DMA enable

When this bit is set, a DMA request is generated whenever the TXE flag is set.

0: Tx buffer DMA disabled

1: Tx buffer DMA enabled

Bit 0 **RXDMAEN:** Rx buffer DMA enable

When this bit is set, a DMA request is generated whenever the RXNE flag is set.

0: Rx buffer DMA disabled

1: Rx buffer DMA enabled

30.6.3 SPI status register (SPIx_SR)

Address offset: 0x08

Reset value: 0x0002

15	14	13	12	11	10	9	8	7	6	5	4	3	2	1	0
Res.	Res.	Res.	FTLVL[1:0]		FRLVL[1:0]		FRE	BSY	OVR	MODF	CRCERR	Res.	Res.	TXE	RXNE
			r	r	r	r	r	r	r	r	rc_w0			r	r

Bits 15:13 Reserved, must be kept at reset value.

Bits 12:11 **FTLVL[1:0]:** FIFO transmission level

These bits are set and cleared by hardware.

00: FIFO empty

01: 1/4 FIFO

10: 1/2 FIFO

11: FIFO full (considered as FULL when the FIFO threshold is greater than 1/2)

Bits 10:9 **FRLVL[1:0]**: FIFO reception level

These bits are set and cleared by hardware.

00: FIFO empty

01: 1/4 FIFO

10: 1/2 FIFO

11: FIFO full

Note: These bits are not used in SPI receive-only mode while CRC calculation is enabled.

Bit 8 **FRE**: Frame format error

This flag is used for SPI in TI slave mode. Refer to *Section 30.4.11: SPI error flags*.

This flag is set by hardware and reset when SPIx_SR is read by software.

0: No frame format error

1: A frame format error occurred

Bit 7 **BSY:** Busy flag

0: SPI not busy

1: SPI is busy in communication or Tx buffer is not empty

This flag is set and cleared by hardware.

Note: The BSY flag must be used with caution: refer to Section 30.4.10: SPI status flags and Procedure for disabling the SPI on page 986.

Bit 6 **OVR:** Overrun flag

0: No overrun occurred

1: Overrun occurred

This flag is set by hardware and reset by a software sequence.

Bit 5 **MODF:** Mode fault

0: No mode fault occurred

1: Mode fault occurred

This flag is set by hardware and reset by a software sequence. Refer to *Section : Mode fault (MODF) on page 996* for the software sequence.

Bit 4 **CRCERR:** CRC error flag

0: CRC value received matches the SPIx_RXCRCR value

1: CRC value received does not match the SPIx_RXCRCR value

Note: This flag is set by hardware and cleared by software writing 0.

Bits 3:2 Reserved, must be kept at reset value.

Bit 1 **TXE:** Transmit buffer empty

0: Tx buffer not empty

1: Tx buffer empty

Bit 0 **RXNE:** Receive buffer not empty

0: Rx buffer empty

1: Rx buffer not empty

30.6.4 SPI data register (SPIx_DR)

Address offset: 0x0C

Reset value: 0x0000

15	14	13	12	11	10	9	8	7	6	5	4	3	2	1	0
DR[15:0]															
rw	rw	rw	rw	rw	rw	rw	rw	rw	rw	rw	rw	rw	rw	rw	rw

Bits 15:0 **DR[15:0]:** Data register

Data received or to be transmitted

The data register serves as an interface between the Rx and Tx FIFOs. When the data register is read, RxFIFO is accessed while the write to data register accesses TxFIFO (See *Section 30.4.9: Data transmission and reception procedures*).

Note: Data is always right-aligned. Unused bits are ignored when writing to the register, and read as zero when the register is read. The Rx threshold setting must always correspond with the read access currently used.

30.6.5 SPI CRC polynomial register (SPIx_CRCPR)

Address offset: 0x10

Reset value: 0x0007

15	14	13	12	11	10	9	8	7	6	5	4	3	2	1	0
CRCPOLY[15:0]															
rw	rw	rw	rw	rw	rw	rw	rw	rw	rw	rw	rw	rw	rw	rw	rw

Bits 15:0 **CRCPOLY[15:0]:** CRC polynomial register

This register contains the polynomial for the CRC calculation.

The CRC polynomial (0x0007) is the reset value of this register. Another polynomial can be configured as required.

Note: The polynomial value should be odd only. No even value is supported.

30.6.6 SPI Rx CRC register (SPIx_RXCRCR)

Address offset: 0x14

Reset value: 0x0000

15	14	13	12	11	10	9	8	7	6	5	4	3	2	1	0
RXCRC[15:0]															
r	r	r	r	r	r	r	r	r	r	r	r	r	r	r	r

Bits 15:0 **RXCRC[15:0]:** Rx CRC register

When CRC calculation is enabled, the RXCRC[15:0] bits contain the computed CRC value of the subsequently received bytes. This register is reset when the CRCEN bit in SPIx_CR1 register is written to 1. The CRC is calculated serially using the polynomial programmed in the SPIx_CRCPR register.

Only the 8 LSB bits are considered when the CRC frame format is set to be 8-bit length (CRCL bit in the SPIx_CR1 is cleared). CRC calculation is done based on any CRC8 standard.

The entire 16-bits of this register are considered when a 16-bit CRC frame format is selected (CRCL bit in the SPIx_CR1 register is set). CRC calculation is done based on any CRC16 standard.

A read to this register when the BSY Flag is set could return an incorrect value.

30.6.7 SPI Tx CRC register (SPIx_TXCRCR)

Address offset: 0x18

Reset value: 0x0000

15	14	13	12	11	10	9	8	7	6	5	4	3	2	1	0
TXCRC[15:0]															
r	r	r	r	r	r	r	r	r	r	r	r	r	r	r	r

Bits 15:0 **TXCRC[15:0]:** Tx CRC register

When CRC calculation is enabled, the TXCRC[7:0] bits contain the computed CRC value of the subsequently transmitted bytes. This register is reset when the CRCEN bit of SPIx_CR1 is written to 1. The CRC is calculated serially using the polynomial programmed in the SPIx_CRCPR register.

Only the 8 LSB bits are considered when the CRC frame format is set to be 8-bit length (CRCL bit in the SPIx_CR1 is cleared). CRC calculation is done based on any CRC8 standard.

The entire 16-bits of this register are considered when a 16-bit CRC frame format is selected (CRCL bit in the SPIx_CR1 register is set). CRC calculation is done based on any CRC16 standard.

A read to this register when the BSY flag is set could return an incorrect value.

30.6.8 SPI register map

Table 196 shows the SPI register map and reset values.

Table 196. SPI register map and reset values

Offset	Register name reset value	15	14	13	12	11	10	9	8	7	6	5	4	3	2	1	0
0x00	SPIx_CR1	BIDIMODE	BIDIOE	CRCEN	CRCNEXT	CRCL	RXONLY	SSM	SSI	LSBFIRST	SPE	BR [2:0]			MSTR	CPOL	CPHA
	Reset value	0	0	0	0	0	0	0	0	0	0	0	0	0	0	0	0
0x04	SPIx_CR2	Res.	LDMA_TX	LDMA_RX	FRXTH	DS[3:0]				TXEIE	RXNEIE	ERRIE	FRF	NSSP	SSOE	TXDMAEN	RXDMAEN
	Reset value		0	0	0	0	1	1	1	0	0	0	0	0	0	0	0
0x08	SPIx_SR	Res.	Res.	Res.	FTLVL[1:0]		FRLVL[1:0]		FRE	BSY	OVR	MODF	CRCERR			TXE	RXNE
	Reset value				0	0	0	0	0	0	0	0	0			1	0
0x0C	SPIx_DR	DR[15:0]															
	Reset value	0	0	0	0	0	0	0	0	0	0	0	0	0	0	0	0
0x10	SPIx_CRCPR	CRCPOLY[15:0]															
	Reset value	0	0	0	0	0	0	0	0	0	0	0	0	0	1	1	1
0x14	SPIx_RXCRCR	RXCRC[15:0]															
	Reset value	0	0	0	0	0	0	0	0	0	0	0	0	0	0	0	0
0x18	SPIx_TXCRCR	TXCRC[15:0]															
	Reset value	0	0	0	0	0	0	0	0	0	0	0	0	0	0	0	0

Refer to *Section 2.2 on page 55* for the register boundary addresses.

31 Inter-processor communication controller (IPCC)

31.1 Introduction

The inter-processor communication controller (IPCC) is used for communicating data between two processors.

The IPCC block provides a nonblocking signaling mechanism to post and retrieve communication data in an atomic way. It provides the signaling for twelve channels:

- six channels in the direction from processor 1 to processor 2
- six channels in the opposite direction

It is then possible to have two different communication types in each direction.

The IPCC communication data must be located in a common memory, which is not part of the IPCC block.

31.2 IPCC main features

- Status signaling for the twelve channels
  - Channel occupied/free flag, also used as lock
- Two interrupt lines per processor
  - One for RX channel occupied (communication data posted by sending processor)
  - One for TX channel free (communication data retrieved by receiving processor)
- Interrupt masking per channel
  - Channel occupied mask
  - Channel free mask
- Two channel operation modes
  - Simplex (each channel has its own communication data memory location)
  - Half duplex (a single channel associated to a bidirectional communication data information memory location)

31.3 IPCC functional description

The IPCC communication data is located in a common memory, which is not part of the IPCC block. The address location of the communication data must be known or located in a known common area that, as already stated, is not part of the IPCC block.

For each communication, the IPCC block provides a channel status flag CHnF.

- When 0, the channel status flag CHnF indicates that the associated IPCC channel is free (the receiving processor has retrieved communication data), and can be accessed by the sending processor.
- When 1, the channel status flag CHnF indicates that the associated IPCC channel is occupied (the sending processor has posted communication data) and can be accessed by the receiving processor.

The channel operation mode must be known to both processors. A common parameter can be used to indicate the channel transfer mode and must also be located in a known common area. This parameter is not available from the IPCC.

31.3.1 IPCC block diagram

The IPCC (see *Figure 303*) consists of the following subblocks:

- Status block, containing the channel status
- IPCC interface block, providing AHB access to the channel status registers
- Interrupt interface block, providing control for the interrupts

Figure 303. IPCC block diagram

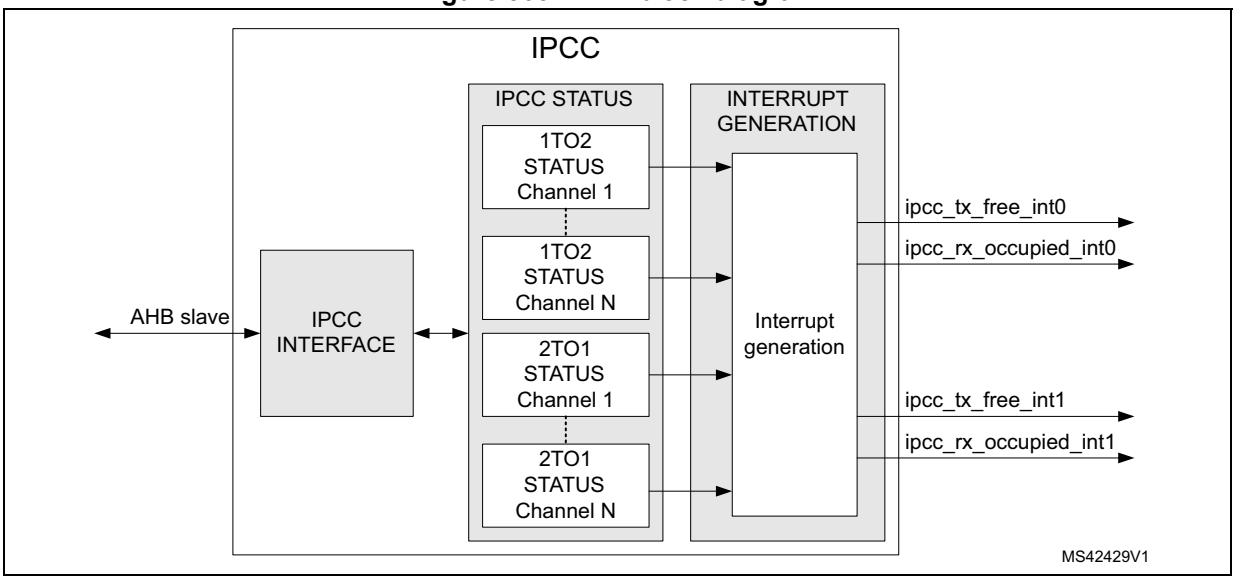

Table 197. IPCC interface signals

Signal		Description
Name	Type	
AHB slave	I/O	AHB register access bus
ipcc_tx_free_int1	O	TX free interrupt to processor 1
ipcc_rx_occupied_int1	O	RX occupied interrupt to processor 1
ipcc_tx_free_int2	O	TX free interrupt to processor 2
ipcc_rx_occupied_int2	O	RX occupied interrupt to processor 2

31.3.2 IPCC Simplex channel mode

In Simplex channel mode, a dedicated memory location (used to transfer data in a single direction) is assigned to the communication data. The associated channel N control bits (see *Table 198*) are used to manage the transfer from the sending to the receiving processor.

Table 198. Bits used for the communication

Processor	A	B
SEND A = 1 RECEIVE B = 2	IPCC_C1CR.TXFIE IPCC_C1MR.CHnFM IPCC_C1SCR.CHnS IPCC_C1TOC2SR.CHnF	IPCC_C2CR.RXOIE IPCC_C2MR.CHnOM IPCC_C2SCR.CHnC
SEND A = 2 RECEIVE B = 1	IPCC_C2CR.TXFIE IPCC_C2MR.CHnFM IPCC_C2SCR.CHnS IPCC_C2TOC1SR.CHnF	IPCC_C1CR.RXOIE IPCC_C1MR.CHnOM IPCC_C1SCR.CHnC

Once the sending processor has posted the communication data in the memory, it sets the channel status flag CHnF to occupied with CHnS.

Once the receiving processor has retrieved the communication data from the memory, it clears the channel status flag CHnF back to free with CHnC.

Figure 304. IPCC Simplex channel mode transfer timing

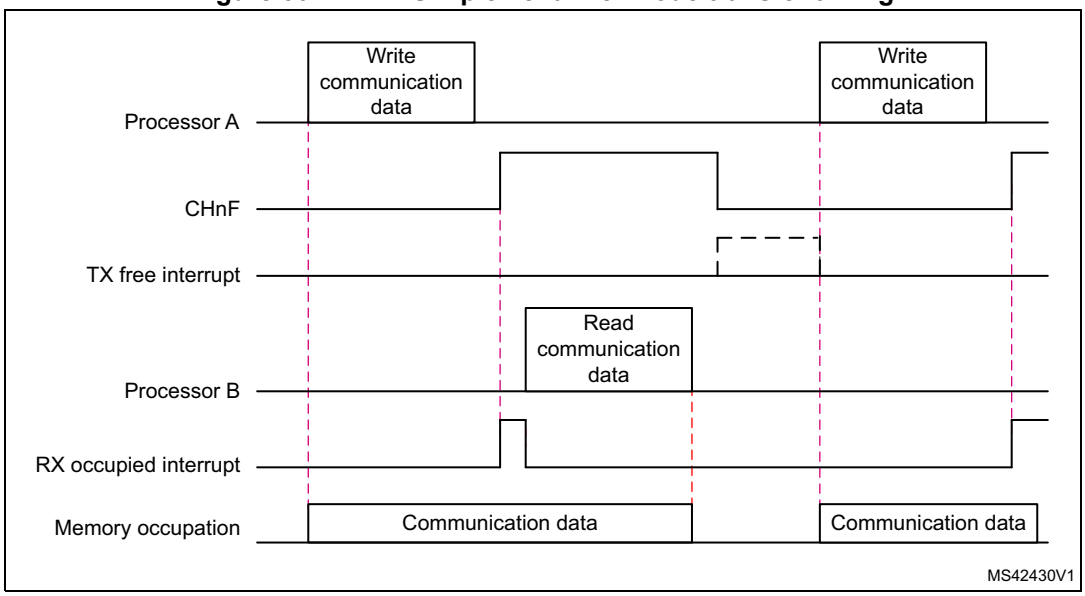

Figure 305. IPCC Simplex - Send procedure state diagram

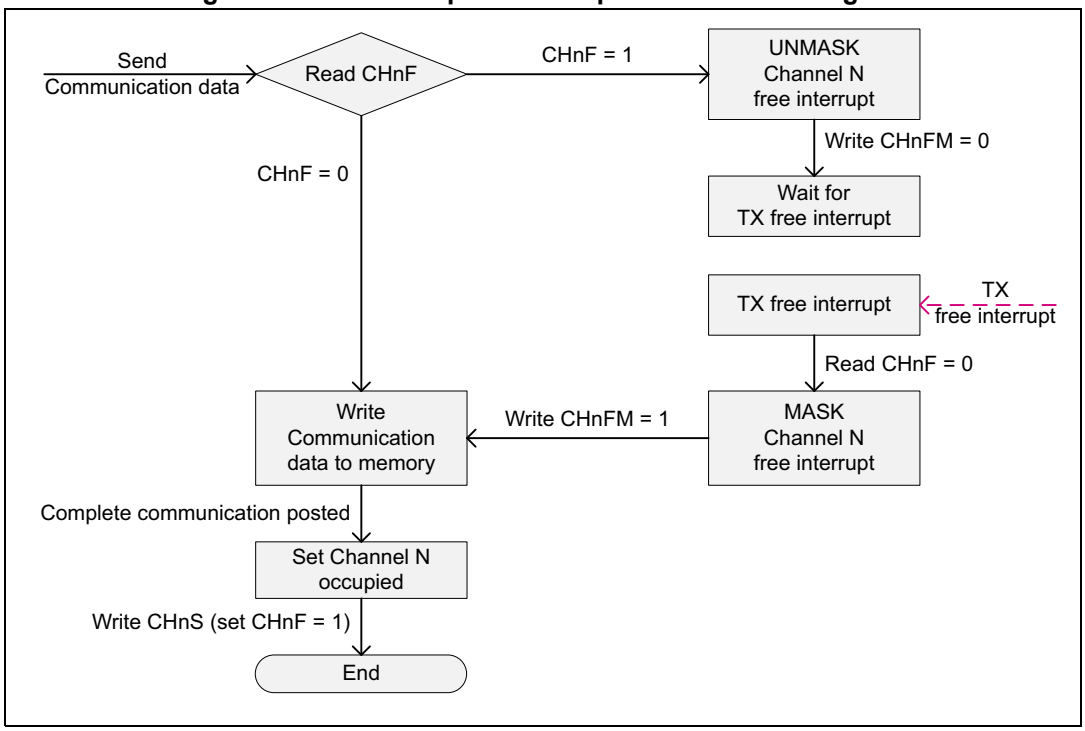

To send communication data:

- The sending processor checks the channel status flag CHnF:
  - When CHnF = 0, the channel is free (last communication data retrieved by the receiving processor), and the new communication data can be written.
  - When CHnF = 1, the channel is occupied (last communication data not retrieved by the receiving processor), and the sending processor unmasks the channel free interrupt (CHnFM = 0).
  - On a TX free interrupt, the sending processor checks which channel became free and masks the channel free interrupt (CHnFM = 1). Then the new communication can take place.
- Once the complete communication data is posted, the channel status is set to occupied with CHnS. This gives memory access to the receiving processor and generates the RX occupied interrupt.

Figure 306. IPCC Simplex - Receive procedure state diagram

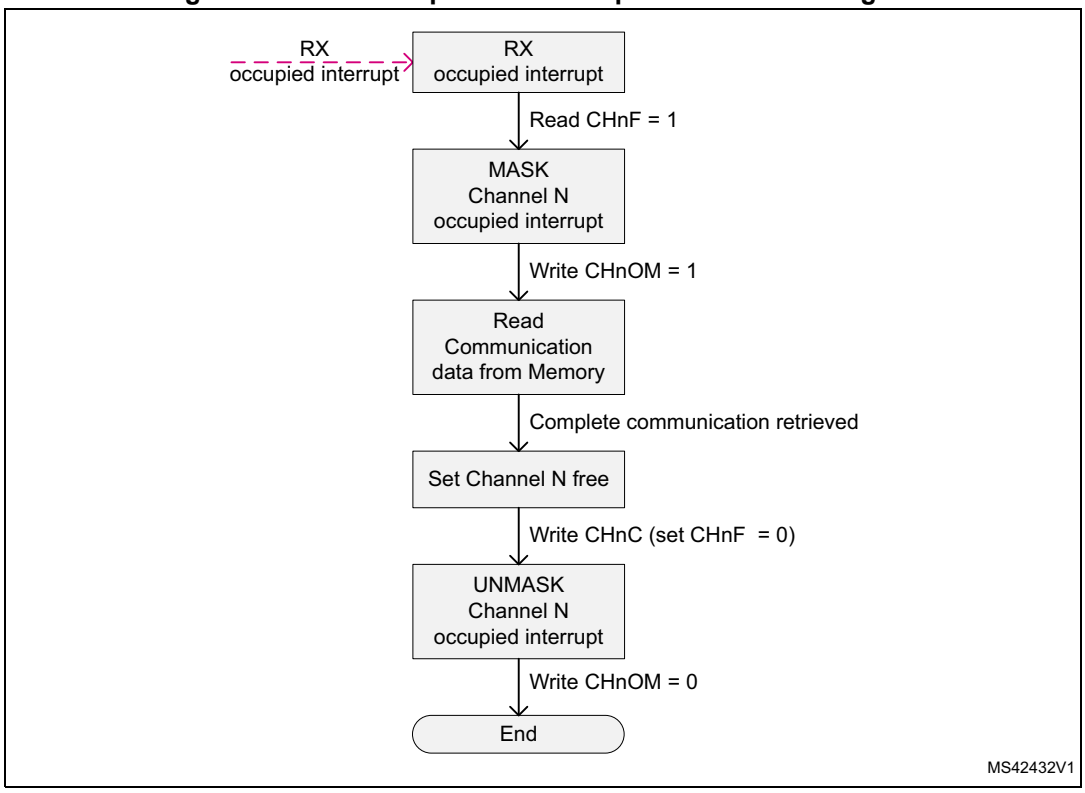

To receive a communication, the channel occupied interrupt is unmasked (CHnOM = 0):

- On an RX occupied interrupt, the receiving processor checks which channel became occupied, masks the associated channel occupied interrupt (CHnOM) and reads the communication data from memory.
- Once the complete communication data is retrieved, the channel status is cleared to free with CHnC. This gives memory access back to the sending processor and may generate the TX free interrupt.
- Once the channel status is cleared, the channel occupied interrupt is unmasked (CHnOM = 0).

31.3.3 IPCC Half-duplex channel mode

The Half-duplex channel mode is used when one processor sends a communication and the other processor sends a response to each communication (ping-pong).

In Half-duplex channel mode, a single dedicated memory location is assigned to communication data and response, and is used to transfer data in both directions. The sending processor channel status flag CHnF is assigned to the channel and used by both processors (see *Table 198*).

Once the processor A posts communication data into memory, it sets the processor A channel status flag CHnF to occupied with CHnS (giving memory access to processor B).

Once the processor B retrieves communication data from memory, it does not change the channel status flags. The memory access is kept by processor B for the response.

Once the processor B posts the response into memory, it clears the channel status flag CHnF to free with CHnC (giving memory access back to processor A).

Once the processor A retrieves the response from the memory, it does not change the channel status flags. The memory location access is kept by processor A for the next communication data.

Figure 307. IPCC Half-duplex channel mode transfer timing

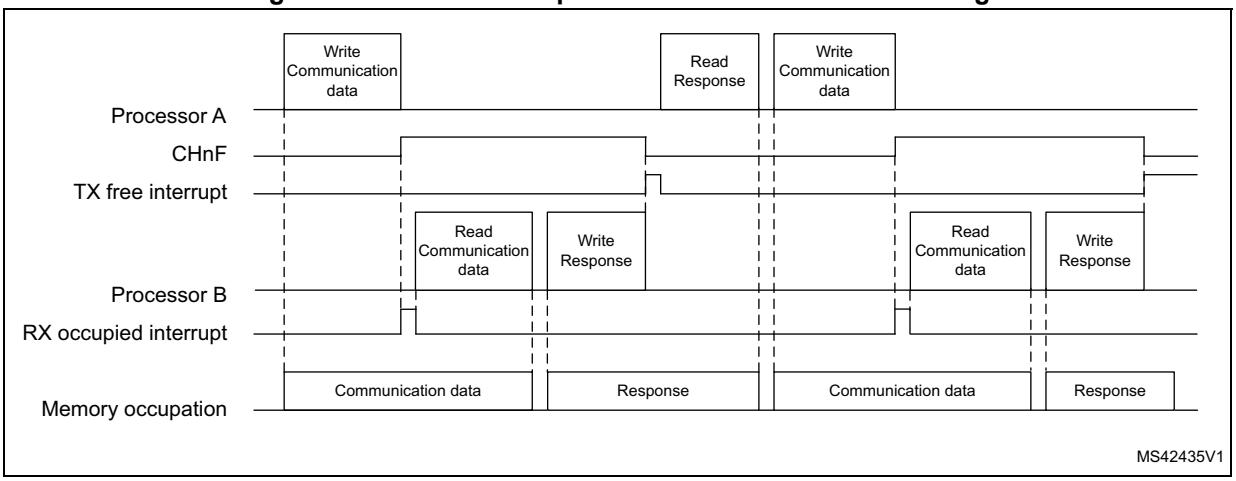

Figure 308. IPCC Half-duplex - Send procedure state diagram

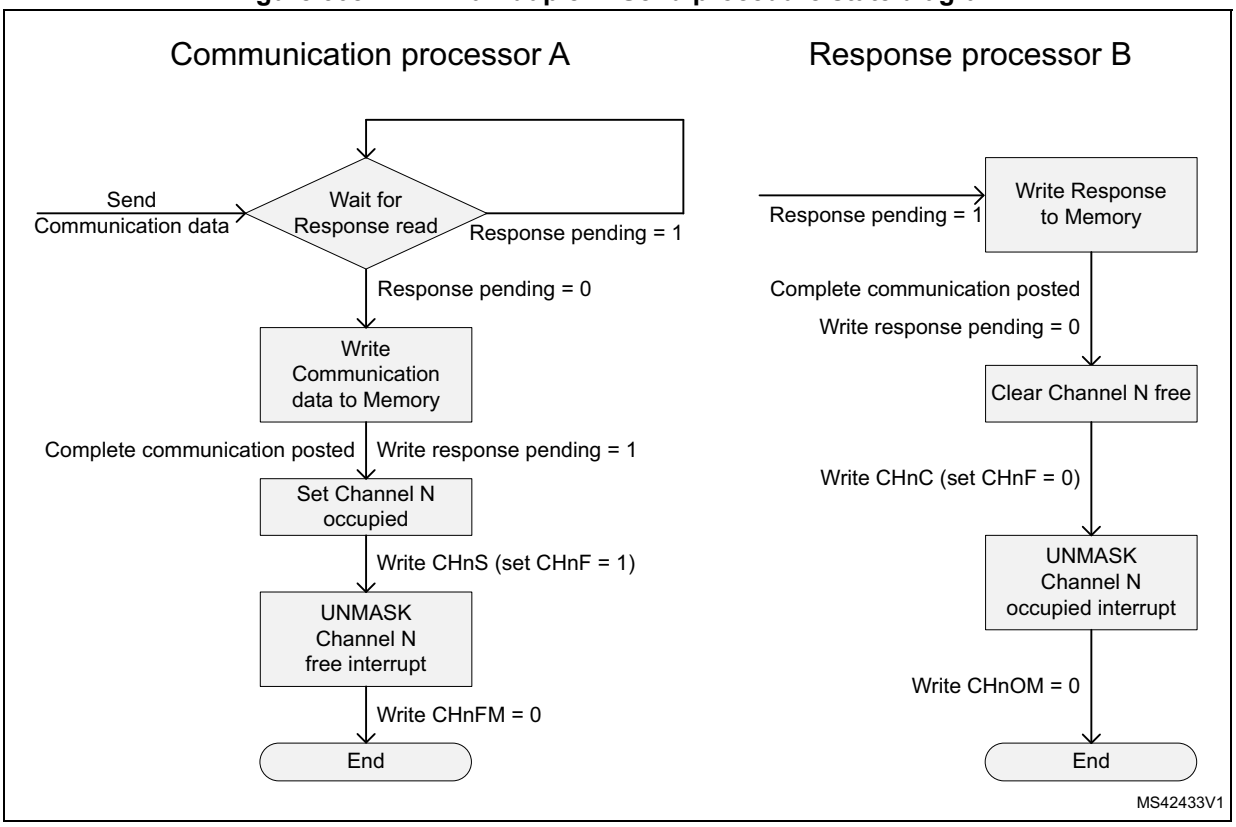

To send communication data:

- The sending processor waits for its response pending software variable to get 0.
  - Once the response pending software variable is 0 the communication data is posted.
- Once the complete communication data has been posted, the channel status flag CHnF is set to occupied with CHnS, and the response pending software variable is set to 1 (this gives memory access and generates the RX occupied interrupt to the receiving processor).
- Once the channel status flag CHnF is set, the channel free interrupt is unmasked (CHnFM = 0).

To send a response:

- The receiving processor waits for its response pending software variable to get 1.
  - Once the response pending software variable is 1, the response is posted.
- Once the complete response is posted, the channel status flag CHnF is cleared to free with CHnC, and the response pending software variable is set to 0 (this gives memory access and generates the TX free interrupt to the sending processor).
- Once the channel status flag CHnF is cleared, the channel occupied interrupt is unmasked (CHnOM = 0).

Figure 309. IPCC Half-duplex - Receive procedure state diagram

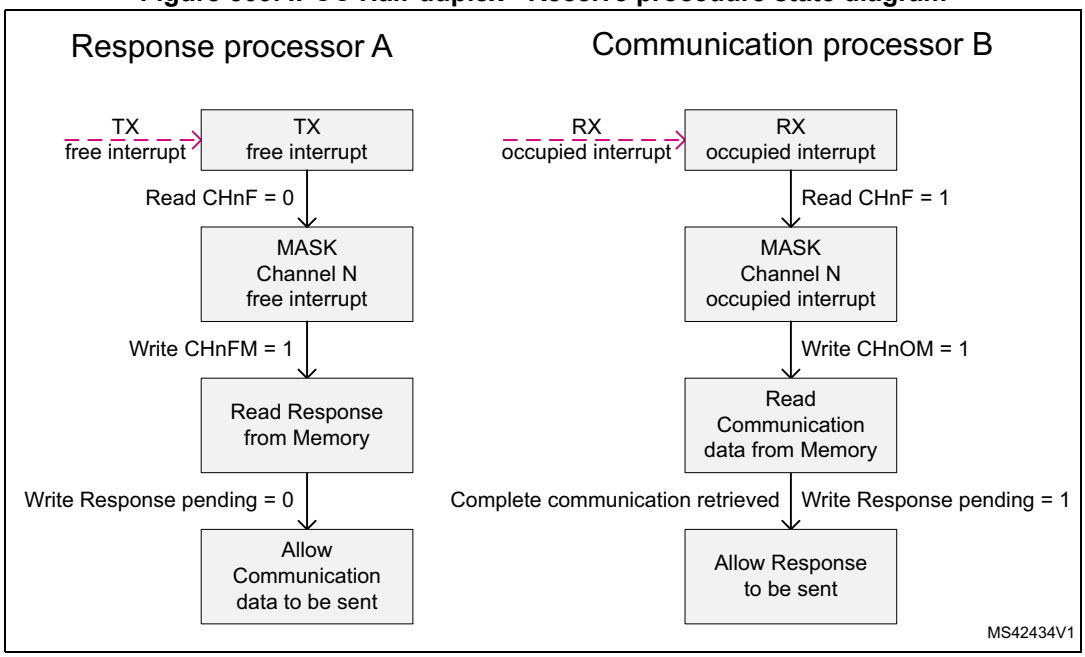

To receive communication data the channel occupied interrupt is unmasked (CHnOM = 0):

- On an RX occupied interrupt, the receiving processor checks which channel became occupied, masks the associated channel occupied interrupt (CHnOM) and reads the communication data from the memory.
- Once the complete communication data is retrieved, the response pending software variable is set. The channel status is not changed, access to the memory is kept to post the subsequent response.

To receive the response the channel free interrupt is unmasked (CHnFM = 0):

- On a TX free interrupt, the sending processor checks which channel became free, masks the associated channel free interrupt (CHnFM) and reads the response from the memory.
- Once the complete response is retrieved, the response pending software variable is cleared. The channel status is not changed, access to the memory is kept to post the subsequent communication data.

31.3.4 IPCC interrupts

There are four interrupt lines :

- two RX channel occupied interrupts, one for each processor:
  - Interrupt enable RXOIE per processor
  - Individual mask CHnOM per channel
- two TX channel free interrupts, one for each processor
  - Interrupt enable TXFIE per processor
  - Individual mask CHnFM per channel

The RX occupied interrupt is used by the receiving processor and indicates when an unmasked channel status indicates occupied (CHnF = 1).

The TX free interrupt is used by the sending processor, and indicates when an unmasked channel status indicates free (CHnF = 0).

A secure channel only generates a secure interrupt, and only in the case when the channel is secure unmasked and global secure enabled.

A non-secure channel only generates a non-secure interrupt, and only in the case when the channel is non-secure unmasked and global non-secure enabled.

31.4 IPCC registers

The peripheral registers must be accessed by words (32-bit). Byte (8-bit) and half-word (16-bit) accesses are not permitted and do not generate a bus error.

31.4.1 IPCC processor 1 control register (IPCC_C1CR)

Address offset: 0x000

Reset value: 0x0000 0000

31	30	29	28	27	26	25	24	23	22	21	20	19	18	17	16
Res.	Res.	Res.	Res.	Res.	Res.	Res.	Res.	Res.	Res.	Res.	Res.	Res.	Res.	Res.	TXFIE
															rw
15	14	13	12	11	10	9	8	7	6	5	4	3	2	1	0
Res.	Res.	Res.	Res.	Res.	Res.	Res.	Res.	Res.	Res.	Res.	Res.	Res.	Res.	Res.	RXOIE
															rw

Bits 31:17 Reserved, must be kept at reset value.

Bit 16 **TXFIE**: Processor 1 transmit channel free interrupt enable
Associated with IPCC_C1TOC2SR.
1: Enable an unmasked processor 1 transmit channel free to generate a TX free interrupt.
0: Processor 1 TX free interrupt disabled

Bits 15:1 Reserved, must be kept at reset value.

Bit 0 **RXOIE**: Processor 1 receive channel occupied interrupt enable
Associated with IPCC_C2TOC1SR.
1: Enable an unmasked processor 1 receive channel occupied to generate an RX occupied interrupt.
0: Processor 1 RX occupied interrupt disabled

31.4.2 IPCC processor 1 mask register (IPCC_C1MR)

Address offset: 0x004

Reset value: 0xFFFF FFFF

31	30	29	28	27	26	25	24	23	22	21	20	19	18	17	16
Res.	Res.	Res.	Res.	Res.	Res.	Res.	Res.	Res.	Res.	CH6 FM	CH5 FM	CH4 FM	CH3 FM	CH2 FM	CH1 FM
										rw	rw	rw	rw	rw	rw
15	14	13	12	11	10	9	8	7	6	5	4	3	2	1	0
Res.	Res.	Res.	Res.	Res.	Res.	Res.	Res.	Res.	Res.	CH6 OM	CH5 OM	CH4 OM	CH3 OM	CH2 OM	CH1 OM
										rw	rw	rw	rw	rw	rw

Bits 31:22 Reserved, must be kept at reset value.

Bits 21:16 **CHnFM:** Processor 1 transmit channel n status set, (n = 6 to 1).
Associated with IPCC_C1TOC2SR.CHnF
1: Transmit channel n free interrupt masked.
0: Transmit channel n free interrupt not masked.

Bits 15:6 Reserved, must be kept at reset value.

Bits 5:0 **CHnOM**: Processor 1 receive channel n status clear (n = 6 to 1).
Associated with IPCC_C2TOC1SR.CHnF
1: Receive channel n occupied interrupt masked.
0: Receive channel n occupied interrupt not masked.

31.4.3 IPCC processor 1 status set clear register (IPCC_C1SCR)

Address offset: 0x008

Reset value: 0x0000 0000

Reading this register always returns 0x0000 0000.

31	30	29	28	27	26	25	24	23	22	21	20	19	18	17	16
Res.	Res.	Res.	Res.	Res.	Res.	Res.	Res.	Res.	Res.	CH6S	CH5S	CH4S	CH3S	CH2S	CH1S
										rw	rw	rw	rw	rw	rw
15	14	13	12	11	10	9	8	7	6	5	4	3	2	1	0
Res.	Res.	Res.	Res.	Res.	Res.	Res.	Res.	Res.	Res.	CH6C	CH5C	CH4C	CH3C	CH2C	CH1C
										rw	rw	rw	rw	rw	rw

Bits 31:22 Reserved, must be kept at reset value.

Bits 21:16 **CHnS:** Processor 1 transmit channel n status set (n = 6 to 1).
Associated with IPCC_C1TOC2SR.CHnF
1: Processor 1 transmit channel n status bit set.
0: No action.

Bits 15:6 Reserved, must be kept at reset value.

Bits 5:0 **CHnC**: Processor 1 receive channel n status clear (n = 6 to 1).
Associated with IPCC_C2TOC1SR.CHnF
1: Processor 1 receive channel n status bit clear.
0: No action.

31.4.4 IPCC processor 1 to processor 2 status register (IPCC_C1TOC2SR)

Address offset: 0x00C

Reset value: 0x0000 0000

31	30	29	28	27	26	25	24	23	22	21	20	19	18	17	16
Res.	Res.	Res.	Res.	Res.	Res.	Res.	Res.	Res.	Res.	Res.	Res.	Res.	Res.	Res.	Res.
15	14	13	12	11	10	9	8	7	6	5	4	3	2	1	0
Res.	Res.	Res.	Res.	Res.	Res.	Res.	Res.	Res.	Res.	CH6F	CH5F	CH4F	CH3F	CH2F	CH1F
										r	r	r	r	r	r

Bits 31:6 Reserved, must be kept at reset value.

Bits 5:0 **CHnF:** Processor 1 transmit to processor 2 receive channel n status flag before masking (n = 6 to 1).

1: Channel occupied, data can be read by the receiving processor 2.
Generates a channel RX occupied interrupt to processor 2, when unmasked.
0: Channel free, data can be written by the sending processor 1.
Generates a channel TX free interrupt to processor 1, when unmasked.

31.4.5 IPCC processor 2 control register (IPCC_C2CR)

Address offset: 0x010

Reset value: 0x0000 0000

31	30	29	28	27	26	25	24	23	22	21	20	19	18	17	16
Res.	Res.	Res.	Res.	Res.	Res.	Res.	Res.	Res.	Res.	Res.	Res.	Res.	Res.	Res.	TXFIE
															rw
15	14	13	12	11	10	9	8	7	6	5	4	3	2	1	0
Res.	Res.	Res.	Res.	Res.	Res.	Res.	Res.	Res.	Res.	Res.	Res.	Res.	Res.	Res.	RXOIE
															rw

Bits 31:17 Reserved, must be kept at reset value.

Bit 16 **TXFIE:** Processor 2 transmit channel free interrupt enable

Associated with IPCC_C2TOC1SR.
1: Enable an unmasked processor 2 transmit channel free to generate a TX free interrupt.
0: Processor 2 TX free interrupt disabled

Bits 15:1 Reserved, must be kept at reset value.

Bit 0 **RXOIE:** Processor 2 receive channel occupied interrupt enable

Associated with IPCC_C1TOC2SR.
1: Enable an unmasked processor 2 receive channel occupied to generate an RX occupied interrupt.
0: Processor 2 RX occupied interrupt disabled

31.4.6 IPCC processor 2 mask register (IPCC_C2MR)

Address offset: 0x014

Reset value: 0xFFFF FFFF

31	30	29	28	27	26	25	24	23	22	21	20	19	18	17	16
Res.	Res.	Res.	Res.	Res.	Res.	Res.	Res.	Res.	Res.	CH6 FM	CH5 FM	CH4 FM	CH3 FM	CH2 FM	CH1 FM
										rw	rw	rw	rw	rw	rw
15	14	13	12	11	10	9	8	7	6	5	4	3	2	1	0
Res.	Res.	Res.	Res.	Res.	Res.	Res.	Res.	Res.	Res.	CH6 OM	CH5 OM	CH4 OM	CH3 OM	CH2 OM	CH1 OM
										rw	rw	rw	rw	rw	rw

Bits 31:22 Reserved, must be kept at reset value.

Bits 21:16 **CHnFM:** Processor 2 transmit channel n free interrupt mask (n = 6 to 1).
Associated with IPCC_C2TOC1SR.CHnF
1: Transmit channel n free interrupt masked.
0: Transmit channel n free interrupt not masked.

Bits 15:6 Reserved, must be kept at reset value.

Bits 5:0 **CHnOM**: Processor 2 receive channel n occupied interrupt mask (n = 6 to 1).
Associated with IPCC_C1TOC2SR.CHnF
1: Receive channel n occupied interrupt masked.
0: Receive channel n occupied interrupt not masked.

31.4.7 IPCC processor 2 status set clear register (IPCC_C2SCR)

Address offset: 0x018

Reset value: 0x0000 0000

Reading this register always returns 0x0000 0000.

31	30	29	28	27	26	25	24	23	22	21	20	19	18	17	16
Res.	Res.	Res.	Res.	Res.	Res.	Res.	Res.	Res.	Res.	CH6S	CH5S	CH4S	CH3S	CH2S	CH1S
										rw	rw	rw	rw	rw	rw
15	14	13	12	11	10	9	8	7	6	5	4	3	2	1	0
Res.	Res.	Res.	Res.	Res.	Res.	Res.	Res.	Res.	Res.	CH6C	CH5C	CH4C	CH3C	CH2C	CH1C
										rw	rw	rw	rw	rw	rw

Bits 31:22 Reserved, must be kept at reset value.

Bits 21:16 **CHnS:** Processor 2 transmit channel n status set (n = 6 to 1).
Associated with IPCC_C2TOC1SR.CHnF
1: Processor 2 transmit channel n status bit set.
0: No action.

Bits 15:6 Reserved, must be kept at reset value.

Bits 5:0 **CHnC**: Processor 2 receive channel n status clear (n = 6 to 1).
Associated with IPCC_C1TOC2SR.CHnF
1: Processor 2 receive channel n status bit clear.
0: No action.

31.4.8 IPCC processor 2 to processor 1 status register (IPCC_C2TOC1SR)

Address offset: 0x01C

Reset value: 0x0000 0000

31	30	29	28	27	26	25	24	23	22	21	20	19	18	17	16
Res.	Res.	Res.	Res.	Res.	Res.	Res.	Res.	Res.	Res.	Res.	Res.	Res.	Res.	Res.	Res.

15	14	13	12	11	10	9	8	7	6	5	4	3	2	1	0
Res.	Res.	Res.	Res.	Res.	Res.	Res.	Res.	Res.	Res.	CH6F	CH5F	CH4F	CH3F	CH2F	CH1F
										r	r	r	r	r	r

Bits 31:6 Reserved, must be kept at reset value.

Bits 5:0 **CHnF:** Processor 2 transmit to processor 1 receive channel n status flag before masking (n = 6 to 1)

1: Channel occupied, data can be read by the receiving processor 1.
Generates a channel RX occupied interrupt to processor 1, when unmasked.
0: Channel free, data can be written by the sending processor 2.
Generates a channel TX free interrupt to processor 2, when unmasked.

31.4.9 IPCC register map

Table 199. IPCC register map and reset values

Offset	Register name / Reset value	31	30	29	28	27	26	25	24	23	22	21	20	19	18	17	16	15	14	13	12	11	10	9	8	7	6	5	4	3	2	1	0
0x0000	IPCC_C1CR	Res.	Res.	Res.	Res.	Res.	Res.	Res.	Res.	Res.	Res.	Res.	Res.	Res.	Res.	Res.	TXFIE	Res.	Res.	Res.	Res.	Res.	Res.	Res.	Res.	Res.	Res.	Res.	Res.	Res.	Res.	Res.	RXOIE
	Reset value																0																0
0x0004	IPCC_C1MR	Res.	Res.	Res.	Res.	Res.	Res.	Res.	Res.	Res.	Res.	CH6FM	CH5FM	CH4FM	CH3FM	CH2FM	CH1FM	Res.	Res.	Res.	Res.	Res.	Res.	Res.	Res.	Res.	Res.	CH6OM	CH5OM	CH4OM	CH3OM	CH2OM	CH1OM
	Reset value											1	1	1	1	1	1											1	1	1	1	1	1
0x0008	IPCC_C1SCR	Res.	Res.	Res.	Res.	Res.	Res.	Res.	Res.	Res.	Res.	CH6S	CH5S	CH4S	CH3S	CH2S	CH1S	Res.	Res.	Res.	Res.	Res.	Res.	Res.	Res.	Res.	Res.	CH6C	CH5C	CH4C	CH3C	CH2C	CH1C
	Reset value											0	0	0	0	0	0											0	0	0	0	0	0
0x000C	IPCC_C1TOC2SR	Res.	Res.	Res.	Res.	Res.	Res.	Res.	Res.	Res.	Res.	Res.	Res.	Res.	Res.	Res.	Res.	Res.	Res.	Res.	Res.	Res.	Res.	Res.	Res.	Res.	Res.	CH6F	CH5F	CH4F	CH3F	CH2F	CH1F
	Reset value																											0	0	0	0	0	0
0x0010	IPCC_C2CR	Res.	Res.	Res.	Res.	Res.	Res.	Res.	Res.	Res.	Res.	Res.	Res.	Res.	Res.	Res.	TXFIE	Res.	Res.	Res.	Res.	Res.	Res.	Res.	Res.	Res.	Res.	Res.	Res.	Res.	Res.	Res.	RXOIE
	Reset value																0																0
0x0014	IPCC_C2MR	Res.	Res.	Res.	Res.	Res.	Res.	Res.	Res.	Res.	Res.	CH6FM	CH5FM	CH4FM	CH3FM	CH2FM	CH1FM	Res.	Res.	Res.	Res.	Res.	Res.	Res.	Res.	Res.	Res.	CH6OM	CH5OM	CH4OM	CH3OM	CH2OM	CH1OM
	Reset value											1	1	1	1	1	1											1	1	1	1	1	1
0x0018	IPCC_C2SCR	Res.	Res.	Res.	Res.	Res.	Res.	Res.	Res.	Res.	Res.	CH6S	CH5S	CH4S	CH3S	CH2S	CH1S	Res.	Res.	Res.	Res.	Res.	Res.	Res.	Res.	Res.	Res.	CH6C	CH5C	CH4C	CH3C	CH2C	CH1C
	Reset value											0	0	0	0	0	0											0	0	0	0	0	0
0x001C	IPCC_C2TOC1SR	Res.	Res.	Res.	Res.	Res.	Res.	Res.	Res.	Res.	Res.	Res.	Res.	Res.	Res.	Res.	Res.	Res.	Res.	Res.	Res.	Res.	Res.	Res.	Res.	Res.	Res.	CH6F	CH5F	CH4F	CH3F	CH2F	CH1F
	Reset value																											0	0	0	0	0	0

Refer to *Section 2.2 on page 55* for the register boundary addresses.

32 Hardware semaphore (HSEM)

32.1 Introduction

The hardware semaphore block provides 32 (32-bit) register based semaphores.

The semaphores can be used to ensure synchronization between different processes running between different cores. The HSEM provides a non-blocking mechanism to lock semaphores in an atomic way. The following functions are provided:

- Semaphore lock, in two ways:
  - 2-step lock: by writing COREID and PROCID to the semaphore, followed by a read check
  - 1-step lock: by reading the COREID from the semaphore
- Interrupt generation when a semaphore is unlocked
  - Each semaphore may generate an interrupt on one of the interrupt lines
- Semaphore clear protection
  - A semaphore is only unlocked when COREID and PROCID match
- Global semaphore clear per COREID

32.2 Main features

The HSEM includes the following features:

- 32 (32-bit) semaphores
- 8-bit PROCID
- 4-bit COREID
- One interrupt line per processor
- Lock indication

32.3 Functional description

32.3.1 HSEM block diagram

As shown in *Figure 310*, the HSEM is based on three sub-blocks:

- the semaphore block containing the semaphore status and IDs
- the semaphore interface block providing AHB access to the semaphore via the HSEM_Rx and HSEM_RLRx registers
- the interrupt interface block providing control for the interrupts via HSEM_CnISR, HSEM_CnIER, HSEM_CnMISR, and HSEM_CnICR registers.

Figure 310. HSEM block diagram

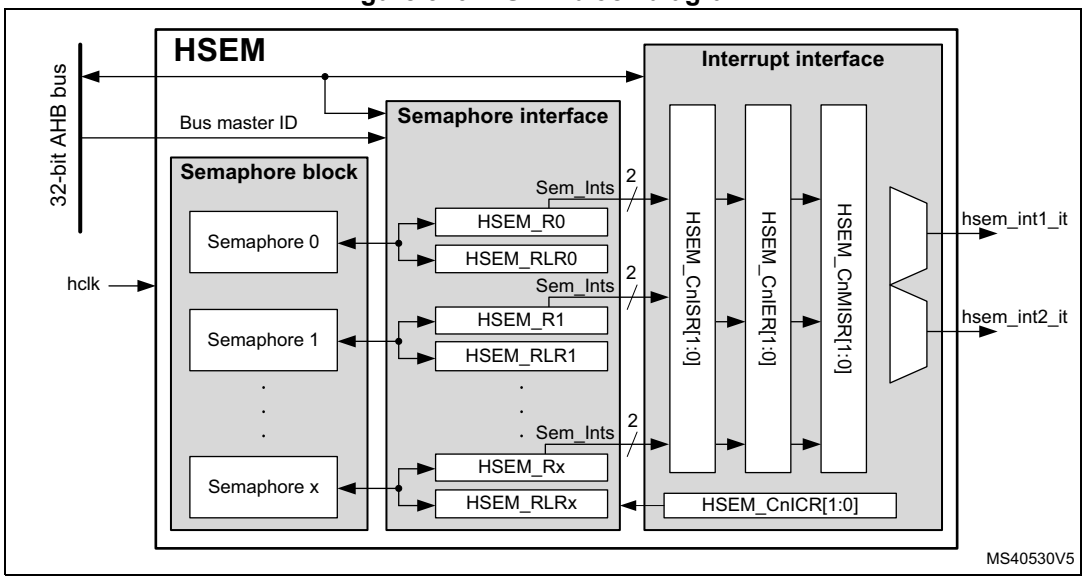

32.3.2 HSEM internal signals

Table 200. HSEM internal input/output signals

Signal name	Signal type	Description
AHB bus	Digital input/output	AHB register access bus
BusMasterID	Digital input	AHB bus master ID
hsem_intn_it	Digital output	Interrupt n line (n = 1 to 2)

32.3.3 HSEM lock procedures

There are two lock procedures, namely 2-step (write) lock and 1-step (read) lock. The two procedures can be used concurrently.

The semaphore is free when its LOCK bit is 0. In this case, the COREID and PROCID are also 0. When the LOCK bit is 1, the semaphore is locked and the COREID indicates which AHB bus master ID has locked it. The PROCID indicates which process of that AHB bus master ID has locked the semaphore.

When write locking a semaphore, the written COREID must match the AHB bus master ID , and the PROCID is written by the AHB bus master software process taking the lock.

When read locking the semaphore, the COREID is taken from the AHB bus master ID, and the PROCID is forced to 0 by hardware. There is no PROCID available with read lock.

Figure 311. Procedure state diagram

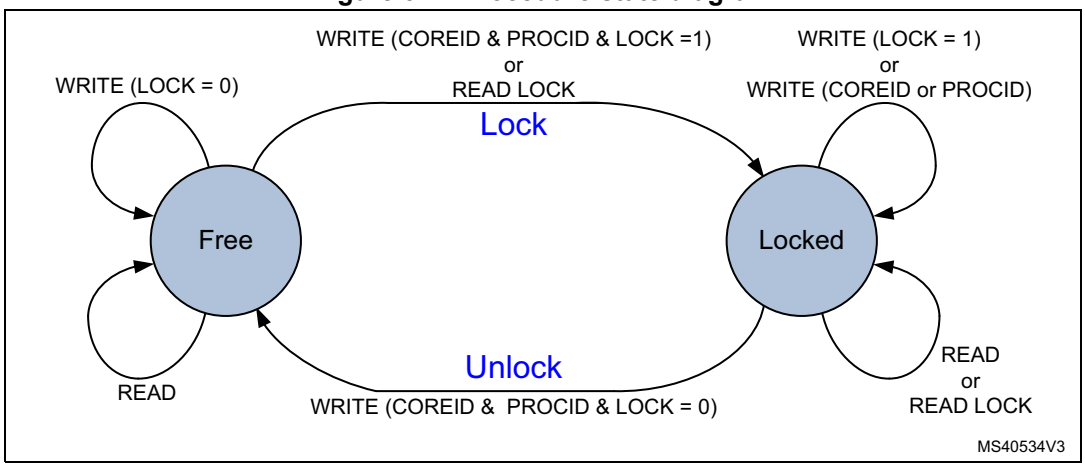

2-step (write) lock procedure

The 2-step lock procedure consists in a write to lock the semaphore, followed by a read to check if the lock has been successful, carried out from the HSEM_Rx register.

- Write semaphore with PROCID and COREID, and LOCK = 1. The COREID data written by software must match the AHB bus master information, that is, a AHB bus master ID = 1 writes data COREID = 1.

  Lock is put in place when the semaphore is free at write time.
- Read-back the semaphore

  The software checks the lock status, if PROCID and COREID match the written data, then the lock is confirmed.
- Else retry (the semaphore has been locked by another process, AHB bus master ID).

A semaphore can only be locked when it is free.

A semaphore can be locked when the PROCID = 0.

Consecutive write attempts with LOCK = 1 to a locked semaphore are ignored.

1-step (read) lock procedure

The 1-step procedure consists in a read to lock and check the semaphore in a single step, carried out from the HSEM_RLRx register.

- Read lock semaphore with the AHB bus master COREID.
- If read COREID matches and PROCID = 0, then lock is put in place. If COREID matches and PROCID is not 0, this means that another process from the same COREID has locked the semaphore with a 2-step (write) procedure.
- Else retry (the semaphore has been locked by another process, AHB bus master ID).

A semaphore can only be locked when it is free. When read locking a free semaphore, PROCID is 0. Read locking a locked semaphore returns the COREID and PROCID that locked it. All read locks, including the first one that locks the semaphore, return the COREID that locks or locked the semaphore.

Note: The 1-step procedure must not be used when running multiple processes of the same AHB bus master ID. All processes using the same semaphore read the same status. When only one process locks the semaphore, each process of that AHB bus master ID reads the semaphore as locked by itself with the COREID.

32.3.4 HSEM write/read/read lock register address

For each semaphore, two AHB register addresses are provided, separated in two banks of 32-bit semaphore registers, spaced by a 0x80 address offset.

In the first register address bank the semaphore can be written (locked/unlocked) and read through the HSEM_Rx registers.

In the second register address bank the semaphore can be read (locked) through the HSEM_RLRx registers.

32.3.5 HSEM unlock procedures

Unlocking a semaphore is a protected process, to prevent accidental clearing by a AHB bus master ID or by a process not having the semaphore lock right. The procedure consists in writing to the semaphore HSEM_Rx register with the corresponding COREID and PROCID and LOCK = 0. When unlocked, the COREID, and the PROCID are all 0.

When unlocked, an interrupt may be generated to signal the event. To this end, the semaphore interrupt must be enabled.

The unlock procedure consists in a write to the semaphore HSEM_Rx register with matching COREID regardless on how the semaphore has been locked (1- or 2-step).

- Write semaphore with PROCID, COREID, and LOCK = 0
- If the written data matches the semaphore PROCID and COREID and the AHB bus master ID , the semaphore is unlocked and an interrupt may be generated when enabled, else write is ignored, semaphore remains locked and no interrupt is generated (the semaphore is locked by another process, AHB bus master ID or the written data does not match the AHB bus master signaling).

Note: Different processes of the same AHB bus master ID can write any PROCID value. Preventing other processes of the same AHB bus master ID from unlocking a semaphore must be ensured by software, handling the PROCID correctly.

32.3.6 HSEM COREID semaphore clear

All semaphores locked by a COREID can be unlocked at once by using the HSEM_CR register. Write COREID and correct KEY value in HSEM_CR. All locked semaphores with a matching COREID are unlocked, and may generate an interrupt when enabled.

Note: This procedure may be used in case of an incorrect functioning AHB bus master ID, where another AHB bus master can unlock the locked semaphores by writing the COREID of the incorrect functioning processor into the HSEM_CR register with the correct KEY value. This unlocks all locked semaphores with a matching COREID.

An interrupt may be generated for the unlocked semaphore(s). To this end, the semaphore interrupt must be enabled in the HSEM_CnIER registers.

32.3.7 HSEM interrupts

An interrupt line hsem_intn_it per processor allows each semaphore to generate an interrupt.

An interrupt line provides the following features per semaphore:

- interrupt enable
- interrupt clear
- interrupt status
- masked interrupt status

With the interrupt enable (HSEM_CnIER) the semaphores affecting the interrupt line can be enabled. Disabled (masked) semaphore interrupts do not set the masked interrupt status MISF for that semaphore, and do not generate an interrupt on the interrupt line.

The interrupt clear (HSEM_CnICR) clears the interrupt status ISF and masked interrupt status MISF of the associated semaphore for the interrupt line.

The interrupt status (HSEM_CnISR) mirrors the semaphore interrupt status ISF before the enable.

The masked interrupt status (HSEM_CnMISR) only mirrors the semaphore enabled interrupt status MISF on the interrupt line. All masked interrupt status MISF of the enabled semaphores need to be cleared to clear the interrupt line.

Figure 312. Interrupt state diagram

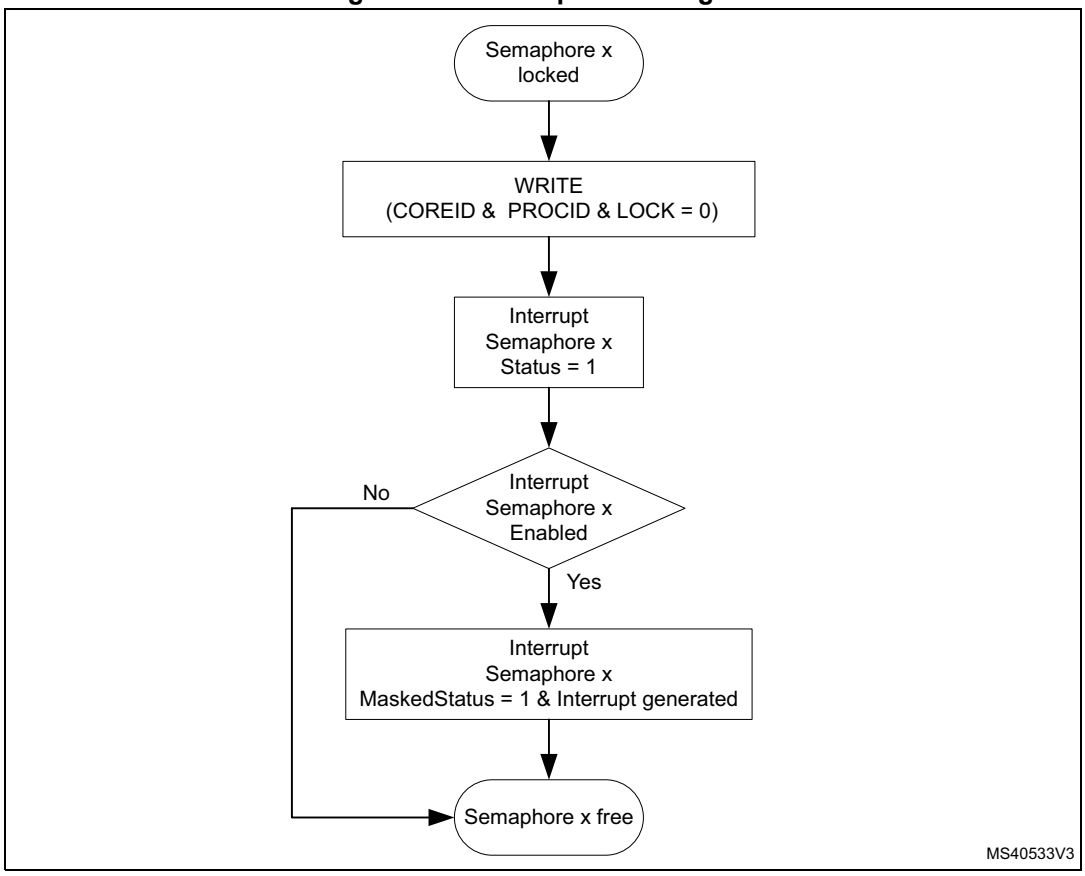

The procedure to get an interrupt when a semaphore becomes free is described hereafter.

Try to lock semaphore x

- If the semaphore lock is obtained, no interrupt is needed.
- If the semaphore lock fails:
- Clear pending semaphore x interrupt status for the interrupt line in HSEM_CnICR.
  Re-try to lock the semaphore x again:
  - If the semaphore lock is obtained, no interrupt is needed (semaphore has been freed between first try to lock and clear semaphore interrupt status).
  - If the semaphore lock fails, enable the semaphore x interrupt in HSEM_CnIER.

On semaphore x free interrupt, try to lock semaphore x

- If the semaphore lock is obtained:
  Disable the semaphore x interrupt in HSEM_CnIER.
  Clear pending semaphore x interrupt status in HSEM_CnICR.
- If the semaphore x lock fails:
  Clear pending semaphore x interrupt status in HSEM_CnICR.
  Try again to lock the semaphore x:
  - If the semaphore lock is obtained (semaphore has been freed between first try to lock and semaphore interrupt status clear), disable the semaphore interrupt in HSEM_CnIER.

– If the semaphore lock fails, wait for semaphore free interrupt.

Note: An interrupt does not lock the semaphore. After an interrupt, either the AHB bus master or the process must still perform the lock procedure to lock the semaphore.

It is possible to have multiple AHB bus masters informed by the semaphore free interrupts. Each AHB bus master gets its interrupt, and the first one to react locks the semaphore.

32.3.8 AHB bus master ID verification

The HSEM allows only authorized AHB bus master IDs to lock and unlock semaphores.

- The AHB bus master 2-step lock write access to the semaphore HSEM_Rx register is checked against the valid bus master IDs.
  - Accesses from unauthorized AHB bus master IDs are discarded and do not lock the semaphore.
- The AHB bus master 1-step lock read access from the semaphore HSEM_RLRx register is checked against the valid bus master IDs.
  - An unauthorized AHB bus master ID read from HSEM_RLRx returns all 0.
- The semaphore unlock write access to the HSEM_CR register is checked against the valid bus master IDs. Only the valid bus master IDs can write to the HSEM_CR register and unlock any of the COREID semaphores.
  - Accesses from unauthorized AHB bus master IDs are discarded and do not clear the COREID semaphores.

Table 201 details the relation between bus master/processor and COREID.

Table 201. Authorized AHB bus master IDs

Bus master 0 (processor1)	Bus master 1 (processor2)
COREID = 4	COREID = 8

Note: Accesses from unauthorized AHB bus master IDs to other registers are granted.

32.4 HSEM registers

Registers must be accessed using word format. Byte and half-word accesses are ignored and have no effect on the semaphores, they generate a bus error.

32.4.1 HSEM register semaphore x (HSEM_Rx)

Address offset: 0x000 + 0x4 * x (x = 0 to 31)

Reset value: 0x0000 0000

The HSEM_Rx must be used to perform a 2-step write lock, read back, and for unlocking a semaphore. Only write accesses with authorized AHB bus master IDs are granted. Write accesses with unauthorized AHB bus master IDs are discarded.

31	30	29	28	27	26	25	24	23	22	21	20	19	18	17	16
LOCK	Res.	Res.	Res.	Res.	Res.	Res.	Res.	Res.	Res.	Res.	Res.	Res.	Res.	Res.	Res.
rw															

15	14	13	12	11	10	9	8	7	6	5	4	3	2	1	0
Res.	Res.	Res.	Res.	COREID[3:0]				PROCID[7:0]							
				rw	rw	rw	rw	rw	rw	rw	rw	rw	rw	rw	rw

Bit 31 **LOCK:** Lock indication

This bit can be written and read by software.

0: On write free semaphore (only when COREID and PROCID match), on read semaphore is free.

1: On write try to lock semaphore, on read semaphore is locked.

Bits 30:13 Reserved, must be kept at reset value.

Bit 12 Reserved, must be kept at reset value.

Bits 11:8 **COREID[3:0]:** Semaphore COREID

Written by software

- When the semaphore is free and the LOCK bit is at the same time written to 1 and the COREID matches the AHB bus master ID.
- When the semaphore is unlocked (LOCK written to 0 and AHB bus master ID matched COREID, the COREID is cleared to 0.
- When the semaphore is unlocked (LOCK bit written to 0 or AHB bus master ID does not match COREID, the COREID is not affected.
- Write when LOCK bit is already 1 (semaphore locked), the COREID is not affected.
- An authorized read returns the stored COREID value.

Bits 7:0 **PROCID[7:0]:** Semaphore PROCID

Written by software

-When the semaphore is free and the LOCK is written to 1, and the COREID matches the AHB bus master ID, PROCID is set to the written data.

- When the semaphore is unlocked, LOCK written to 0 and AHB bus master ID matched COREID, the PROCID is cleared to 0.
- When the semaphore is unlocked, LOCK bit written to 0 and AHB bus master ID does not match COREID, the PROCID is not affected.
- Write when LOCK bit is already 1 (semaphore locked), the PROCID is not affected.
- An authorized read returns the stored PROCID value.

32.4.2 HSEM read lock register semaphore x (HSEM_RLRx)

Address offset: 0x080 + 0x4 * x (x = 0 to 31)

Reset value: 0x0000 0000

Accesses the same physical bits as HSEM_Rx. The HSEM_RLRx must be used to perform a 1-step read lock. Only read accesses with authorized AHB bus master IDs are granted. Read accesses with unauthorized AHB bus master IDs are discarded and return 0.

31	30	29	28	27	26	25	24	23	22	21	20	19	18	17	16
LOCK	Res.	Res.	Res.	Res.	Res.	Res.	Res.	Res.	Res.	Res.	Res.	Res.	Res.	Res.	Res.
r															

15	14	13	12	11	10	9	8	7	6	5	4	3	2	1	0
Res.	Res.	Res.	Res.	COREID[3:0]				PROCID[7:0]							
				r	r	r	r	r	r	r	r	r	r	r	r

Bit 31 **LOCK:** Lock indication

This bit is read only by software at this address.

- When the semaphore is free:

A read with a valid AHB bus master ID locks the semaphore and returns 1.

- When the semaphore is locked:

A read with a valid AHB bus master ID returns 1 (the COREID and PROCID reflect the already locked semaphore information).

Bits 30:13 Reserved, must be kept at reset value.

Bit 12 Reserved, must be kept at reset value.

Bits 11:8 **COREID[3:0]:** Semaphore COREID

This field is read only by software at this address.

On a read, when the semaphore is free, the hardware sets the COREID to the AHB bus master ID reading the semaphore. The COREID of the AHB bus master locking the semaphore is read.

On a read when the semaphore is locked, this field returns the COREID of the AHB bus master that has locked the semaphore.

Bits 7:0 **PROCID[7:0]:** Semaphore processor ID

This field is read only by software at this address.

- On a read when the semaphore is free:

A read with a valid AHB bus master ID locks the semaphore and hardware sets the PROCID to 0.

- When the semaphore is locked:

A read with a valid AHB bus master ID returns the PROCID of the AHB bus master that has locked the semaphore.

32.4.3 HSEM interrupt enable register (HSEM_CnIER)

Address offset: 0x100 + 0x010 * (n - 1), (n = 1 to 2)

Reset value: 0x0000 0000

31	30	29	28	27	26	25	24	23	22	21	20	19	18	17	16
ISE[31:16]															
rw	rw	rw	rw	rw	rw	rw	rw	rw	rw	rw	rw	rw	rw	rw	rw
15	14	13	12	11	10	9	8	7	6	5	4	3	2	1	0
ISE[15:0]															
rw	rw	rw	rw	rw	rw	rw	rw	rw	rw	rw	rw	rw	rw	rw	rw

Bits 31:0 **ISE[31:0]:** Interrupt(n) semaphore x enable bit (x = 0 to 31)
This bit is read and written by software.
0: Interrupt(n) generation for semaphore x disabled (masked)
1: Interrupt(n) generation for semaphore x enabled (not masked)

32.4.4 HSEM interrupt clear register (HSEM_CnICR)

Address offset: 0x104 + 0x010 * (n - 1), (n = 1 to 2)

Reset value: 0x0000 0000

31	30	29	28	27	26	25	24	23	22	21	20	19	18	17	16
ISC[31:16]															
rc_w1	rc_w1	rc_w1	rc_w1	rc_w1	rc_w1	rc_w1	rc_w1	rc_w1	rc_w1	rc_w1	rc_w1	rc_w1	rc_w1	rc_w1	rc_w1
15	14	13	12	11	10	9	8	7	6	5	4	3	2	1	0
ISC[15:0]															
rc_w1	rc_w1	rc_w1	rc_w1	rc_w1	rc_w1	rc_w1	rc_w1	rc_w1	rc_w1	rc_w1	rc_w1	rc_w1	rc_w1	rc_w1	rc_w1

Bits 31:0 **ISC[31:0]:** Interrupt(n) semaphore x clear bit (x = 0 to 31)
This bit is written by software, and is always read 0.
0: Interrupt(n) semaphore x status ISFx and masked status MISFx not affected.
1: Interrupt(n) semaphore x status ISFx and masked status MISFx cleared.

32.4.5 HSEM interrupt status register (HSEM_CnISR)

Address offset: 0x108 + 0x010 * (n - 1), (n = 1 to 2)

Reset value: 0x0000 0000

31	30	29	28	27	26	25	24	23	22	21	20	19	18	17	16
ISF[31:16]															
r	r	r	r	r	r	r	r	r	r	r	r	r	r	r	r
15	14	13	12	11	10	9	8	7	6	5	4	3	2	1	0
ISF[15:0]															
r	r	r	r	r	r	r	r	r	r	r	r	r	r	r	r

Bits 31:0 **ISF[31:0]:** Interrupt semaphore x status bit before enable (mask) (x = 0 to 31)
This bit is set by hardware, and reset only by software. This bit is cleared by software writing the corresponding HSEM_CnICR bit.
0: Interrupt semaphore x status, no interrupt pending
1: Interrupt semaphore x status, interrupt pending

32.4.6 HSEM interrupt status register (HSEM_CnMISR)

Address offset: 0x10C + 0x010 * (n - 1), (n = 1 to 2)

Reset value: 0x0000 0000

31	30	29	28	27	26	25	24	23	22	21	20	19	18	17	16
MISF[31:16]															
r	r	r	r	r	r	r	r	r	r	r	r	r	r	r	r
15	14	13	12	11	10	9	8	7	6	5	4	3	2	1	0
MISF[15:0]															
r	r	r	r	r	r	r	r	r	r	r	r	r	r	r	r

Bits 31:0 **MISF[31:0]:** Masked interrupt(n) semaphore x status bit after enable (mask) (x = 0 to 31)
This bit is set by hardware and read only by software. This bit is cleared by software writing the corresponding HSEM_CnICR bit. This bit is read as 0 when semaphore x status is masked in HSEM_CnIER bit x.
0: interrupt(n) semaphore x status after masking not pending
1: interrupt(n) semaphore x status after masking pending

32.4.7 HSEM clear register (HSEM_CR)

Address offset: 0x140

Reset value: 0x0000 0000

Only write accesses with authorized AHB bus master IDs are granted. Write accesses with unauthorized AHB bus master IDs are discarded.

31	30	29	28	27	26	25	24	23	22	21	20	19	18	17	16
KEY[15:0]															
w	w	w	w	w	w	w	w	w	w	w	w	w	w	w	w
15	14	13	12	11	10	9	8	7	6	5	4	3	2	1	0
Res.	Res.	Res.	Res.	COREID[3:0]				Res.	Res.	Res.	Res.	Res.	Res.	Res.	Res.
				w	w	w	w								

Bits 31:16 **KEY[15:0]:** Semaphore clear key
This field can be written by software and is always read 0.
If this key value does not match HSEM_KEYR.KEY, semaphores are not affected.
If this key value matches HSEM_KEYR.KEY, all semaphores matching the COREID are cleared to the free state.

Bits 15:13 Reserved, must be kept at reset value.

Bit 12 Reserved, must be kept at reset value.

Bits 11:8 **COREID[3:0]:** COREID of semaphores to be cleared
This field can be written by software and is always read 0.
This field indicates the COREID for which the semaphores are cleared when writing the HSEM_CR.

Bits 7:0 Reserved, must be kept at reset value.

32.4.8 HSEM clear semaphore key register (HSEM_KEYR)

Address offset: 0x144

Reset value: 0x0000 0000

31	30	29	28	27	26	25	24	23	22	21	20	19	18	17	16
KEY[15:0]															
rw	rw	rw	rw	rw	rw	rw	rw	rw	rw	rw	rw	rw	rw	rw	rw
15	14	13	12	11	10	9	8	7	6	5	4	3	2	1	0
Res.	Res.	Res.	Res.	Res.	Res.	Res.	Res.	Res.	Res.	Res.	Res.	Res.	Res.	Res.	Res.

Bits 31:16 **KEY[15:0]:** Semaphore clear key
This field can be written and read by software.
Key value to match when clearing semaphores.

Bits 15:0 Reserved, must be kept at reset value.

32.4.9 HSEM register map

Table 202. HSEM register map and reset values

Offset	Register name	31	30	29	28	27	26	25	24	23	22	21	20	19	18	17	16	15	14	13	12	11	10	9	8	7	6	5	4	3	2	1	0
0x000	HSEM_R0	LOCK	Res.	Res.	Res.	Res.	Res.	Res.	Res.	Res.	Res.	Res.	Res.	Res.	Res.	Res.	Res.	Res.	Res.	Res.	Res.	COREID [3:0]				PROCID[7:0]							
	Reset value	0																				0	0	0	0	0	0	0	0	0	0	0	0
0x004	HSEM_R1	LOCK	Res.	Res.	Res.	Res.	Res.	Res.	Res.	Res.	Res.	Res.	Res.	Res.	Res.	Res.	Res.	Res.	Res.	Res.	Res.	COREID [3:0]				PROCID[7:0]							
	Reset value	0																				0	0	0	0	0	0	0	0	0	0	0	0
⋮																																	
0x07C	HSEM_R31	LOCK	Res.	Res.	Res.	Res.	Res.	Res.	Res.	Res.	Res.	Res.	Res.	Res.	Res.	Res.	Res.	Res.	Res.	Res.	Res.	COREID [3:0]				PROCID[7:0]							
	Reset value	0																				0	0	0	0	0	0	0	0	0	0	0	0
0x080	HSEM_RLR0	LOCK	Res.	Res.	Res.	Res.	Res.	Res.	Res.	Res.	Res.	Res.	Res.	Res.	Res.	Res.	Res.	Res.	Res.	Res.	Res.	COREID [3:0]				PROCID[7:0]							
	Reset value	0																				0	0	0	0	0	0	0	0	0	0	0	0
0x084	HSEM_RLR1	LOCK	Res.	Res.	Res.	Res.	Res.	Res.	Res.	Res.	Res.	Res.	Res.	Res.	Res.	Res.	Res.	Res.	Res.	Res.	Res.	COREID [3:0]				PROCID[7:0]							
	Reset value	0																				0	0	0	0	0	0	0	0	0	0	0	0
⋮																																	
0x0FC	HSEM_RLR31	LOCK	Res.	Res.	Res.	Res.	Res.	Res.	Res.	Res.	Res.	Res.	Res.	Res.	Res.	Res.	Res.	Res.	Res.	Res.	Res.	COREID [3:0]				PROCID[7:0]							
	Reset value	0																				0	0	0	0	0	0	0	0	0	0	0	0
0x100	HSEM_C1IER	ISE[31:0]																															
	Reset value	0	0	0	0	0	0	0	0	0	0	0	0	0	0	0	0	0	0	0	0	0	0	0	0	0	0	0	0	0	0	0	0
0x104	HSEM_C1ICR	ISC[31:0]																															
	Reset value	0	0	0	0	0	0	0	0	0	0	0	0	0	0	0	0	0	0	0	0	0	0	0	0	0	0	0	0	0	0	0	0
0x108	HSEM_C1ISR	ISF[31:0]																															
	Reset value	0	0	0	0	0	0	0	0	0	0	0	0	0	0	0	0	0	0	0	0	0	0	0	0	0	0	0	0	0	0	0	0
0x10C	HSEM_C1MISR	MISF[31:0]																															
	Reset value	0	0	0	0	0	0	0	0	0	0	0	0	0	0	0	0	0	0	0	0	0	0	0	0	0	0	0	0	0	0	0	0
0x110	HSEM_C2IER	ISE[31:0]																															
	Reset value	0	0	0	0	0	0	0	0	0	0	0	0	0	0	0	0	0	0	0	0	0	0	0	0	0	0	0	0	0	0	0	0
0x114	HSEM_C2ICR	ISC[31:0]																															
	Reset value	0	0	0	0	0	0	0	0	0	0	0	0	0	0	0	0	0	0	0	0	0	0	0	0	0	0	0	0	0	0	0	0
0x118	HSEM_C2ISR	ISF[31:0]																															
	Reset value	0	0	0	0	0	0	0	0	0	0	0	0	0	0	0	0	0	0	0	0	0	0	0	0	0	0	0	0	0	0	0	0

Table 202. HSEM register map and reset values (continued)

Offset	Register name	31	30	29	28	27	26	25	24	23	22	21	20	19	18	17	16	15	14	13	12	11	10	9	8	7	6	5	4	3	2	1	0
0x11C	HSEM_C2MISR	MISF[31:0]																															
	Reset value	0	0	0	0	0	0	0	0	0	0	0	0	0	0	0	0	0	0	0	0	0	0	0	0	0	0	0	0	0	0	0	0
0x140	HSEM_CR	KEY[15:0]																Res.	Res.	Res.	Res.	COREID[3:0]				Res.	Res.	Res.	Res.	Res.	Res.	Res.	Res.
	Reset value	0	0	0	0	0	0	0	0	0	0	0	0	0	0	0	0					0	0	0	0								
0x144	HSEM_KEYR	KEY[15:0]																Res.	Res.	Res.	Res.	Res.	Res.	Res.	Res.	Res.	Res.	Res.	Res.	Res.	Res.	Res.	Res.
	Reset value	0	0	0	0	0	0	0	0	0	0	0	0	0	0	0	0																

Refer to *Section 2.2: Memory organization* for the register boundary addresses.

33 Debug support (DBG)

33.1 Introduction

A comprehensive set of debug features is provided to support software development and system integration:

- Independent breakpoint debugging of each CPU core in the system
- Code execution tracing
- Software instrumentation
- Cross-triggering
- The debug features can be controlled via a JTAG/Serial-wire debug access port, using industry standard debugging tools. A trace port allows data to be captured for logging and analysis.

The debug features are based on Arm® CoreSight™ components.

- General features:
  - SWJ-DP: JTAG/Serial-wire debug port
  - AHB-AP: AHB access port
- CPU2 debug features:
  - ROM tables
  - System control space (SCS)
  - Breakpoint unit (BPU)
  - Data watchpoint and Trace unit (DWT)
  - Cross trigger interface (CTI)
- CPU1 debug features
  - ROM table
  - System control space (SCS)
  - Breakpoint unit (FPB)
  - Data watchpoint and Trace unit (DWT)
  - Instrumentation trace macrocell (ITM)
  - Cross trigger interface (CTI)
  - Trace port interface unit (TPU)

CPU2 debug access via CPU2 AHB-AP and its associated AHB bus is disabled.

The CPU1 debug features are accessible by the debugger via the CPU1 AHB-AP.

Additional information can be found in the Arm® documents referenced in *Section 33.19*.

33.2 Debug use cases

The trace and debug system is designed to support a variety of typical use cases:

- Low cost trace
  Limited trace capability is available over the single-wire debug output. This supports code instrumentation using “printf”, tracing of data and address watchpoints, interrupt

detection and program counter sampling. Single-wire trace can be maintained even when one or both processors are switched off or clock-stopped.

- Breakpoint debugging of each core independently
  Both processor cores can be simultaneously and independently debugged using equipment connected to the JTAG/SWD debug port. This enables, among others, breakpoint and watchpoint setting, code stepping and memory access.
- Synchronous debugging of both cores
  When one core stops due to a breakpoint or a debugger stop command, the other core can be stopped as well. Similarly, the cores can be restarted at the same time. This allows the user to debug loosely coupled applications, which require the processors to remain synchronized.
- Tracing code execution via the trace port
  Trace information from the CPU1 (Cortex®-M4) is combined into a single trace stream and sent to a trace port analyzer in real time. An ID embedded in the trace allows the analyzer to identify the source of each information packet.

33.3 DBG functional description

33.3.1 DBG block diagram

Figure 313. Block diagram of debug support infrastructure

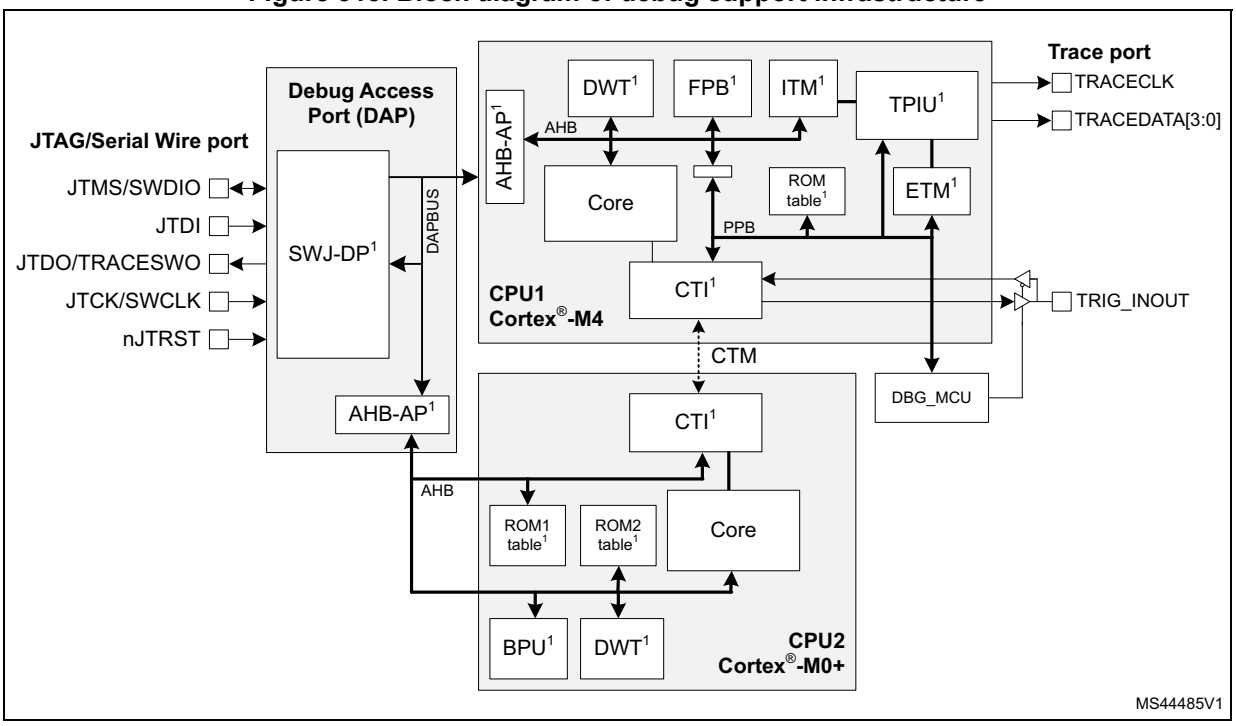

1. Arm® CoreSight™ component

33.3.2 DBG pins and internal signals

Table 203. JTAG/Serial-wire debug port pins

Pin name	JTAG debug port		SW debug port		Pin assignment
	Type	Description	Type	Description	
JTMS/SWDIO	I	JTAG test mode select	IO	Serial wire data in/out	PA13
JTCK/SWCLK	I	JTAG test clock	I	Serial wire clock	PA14
JTDI	I	JTAG test data input	-	-	PA15
JTDO/TRACESWO	O	JTAG test data output	-	-	PB3
nJTRST	I	JTAG test reset	-	-	PB4

Table 204. Trace port pins

Pin name	Type	Description	Pin assignment
TRACED0	O	Trace synchronous data out 0	Refer to datasheet
TRACED1		Trace synchronous data out 1	
TRACED2		Trace synchronous data out 2	
TRACED3		Trace synchronous data out 3	
TRACECK		Trace clock	

Table 205. Single Wire Trace port pins

Pin name	Type	Description	Pin assignment
TRACESWO	O	Single wire trace asynchronous data out	PB3(1)

1. TRACESWO is multiplexed with JTDO. This means that single wire trace is only available when using the serial wire debug interface, and not when using JTAG.

Table 206. Trigger pins

Pin name	Type	Description	Pin assignment
TRIG_INOUT	IO	External trigger bi-directional(1)	Refer to datasheet

1. TRIG_INOUT can be configured as an input or an output by the TRGOEN bit in the DBGMCU.

33.3.3 DBG power domains

The debug components are located in the core power domain. This means that debugger connection is not possible in shutdown or standby low power modes. To avoid losing the connection when the device enters standby mode, it is possible to maintain the power to the core by setting a bit in the DBGMCU. This keeps the processor clocks active, and holds off the reset, so that the debug session is maintained.

33.3.4 DBG clocks

The debugger supplies the clock for the debug port via the debug interface pin, JTCK/SWCLK. This clock is used to register the serial input data in both serial wire and JTAG mode, as well as to operate the state machines and internal logic of the debug port. It must therefore continue to toggle for several cycles after the end of an access, to ensure that the debug port returns to the idle state.

The SWJ-DP contains an asynchronous interface to the DAPCLK domain, which covers the rest of the SWJ-DP and the CPU2 access port.

The DAPCLK is a gated version of the system HCLK4.

The DAPCLK domain is enabled by the debugger using the CDBGPWRUPREQ bit in the debug port CTRL/STAT register. The clock must be enabled before the debugger can access any of the debug features on the device. The availability of the clock is reflected in the CDBGPWRUPACK bit in the debug port CTRL/STAT register. The DAPCLK is disabled at power up, after OBL, and after wakeup from Standby, and must be disabled when the debugger is disconnected, to reduce power consumption.

The debug and trace components included in the processors (among them ITM, DWG, FPB) are clocked with the corresponding core clock.

33.3.5 Debug and low power modes

The devices include power saving features that allow the core power domain to be switched off or stopped when not required. If the power is switched off, or the core is not clocked, all debug components are inaccessible to the debugger. To avoid this, power saving mode emulation has been implemented. If emulation is enabled for a domain, the domain still enters power saving mode, but its clock and power are maintained. In other words, the domain behaves as if it is in power saving mode, but the debugger does not lose the connection.

Emulation mode is programmed in the microcontroller debug (DBGMCU) unit. For more information refer to *Section 33.8*.

33.3.6 DBG reset

The debug port (SWJ-DP) is reset by a power-on reset or an OBL reset, and when waking up from Standby mode.

33.4 Serial wire and JTAG debug port (SWJ-DP)

The SWJ-DP is a Coresight™ component that implements an external access port for connecting debugging equipment.

Two types of interface can be configured:

- a 5-pin standard JTAG interface (JTAG-DP)
- a 2-pin (clock + data) “serial-wire debug” port (SW-DP)

The two modes are mutually exclusive, since they share the same IO pins.

By default the JTAG-DP is selected after a system or a power-on reset. The five IO pins are configured by hardware in debug alternative function mode. The SWJ-DP incorporates pull-up resistors on JTDI, JTMS/SWDIO, and nJTRST, as well as a pull-down resistor on JTCK/SWCLK.

A debugger can select the SW-DP by transmitting the following serial data sequence on JTMS/SWDIO:

... (50 or more ones) ..., 0, 1, 1, 1, 1, 0, 0, 1, 1, 1, 1, 0, 0, 1, 1, 1, ... (50 or more ones) ...

JTCK/SWCLK must be cycled for each data bit.

In SW-DP mode, the unused JTAG pins JTDI, JTDO and nJTRST can be used for other functions. It should be noted that all SWJ port IOs can be reconfigured to other functions by software, but debugging is no longer be possible.

33.4.1 JTAG debug port

There are two TAPs on the JTAG debug port, the JTAG-DP TAP and the BSC TAP.

The JTAG-DP implements a TAP state machine (TAPSM), shown in *Figure 314*, based on IEEE Std 1149.1-1990. The state machine controls two scan chains, one associated with an instruction register (IR), and the other one with a number of data registers (DR).

Figure 314. JTAG TAP state machine

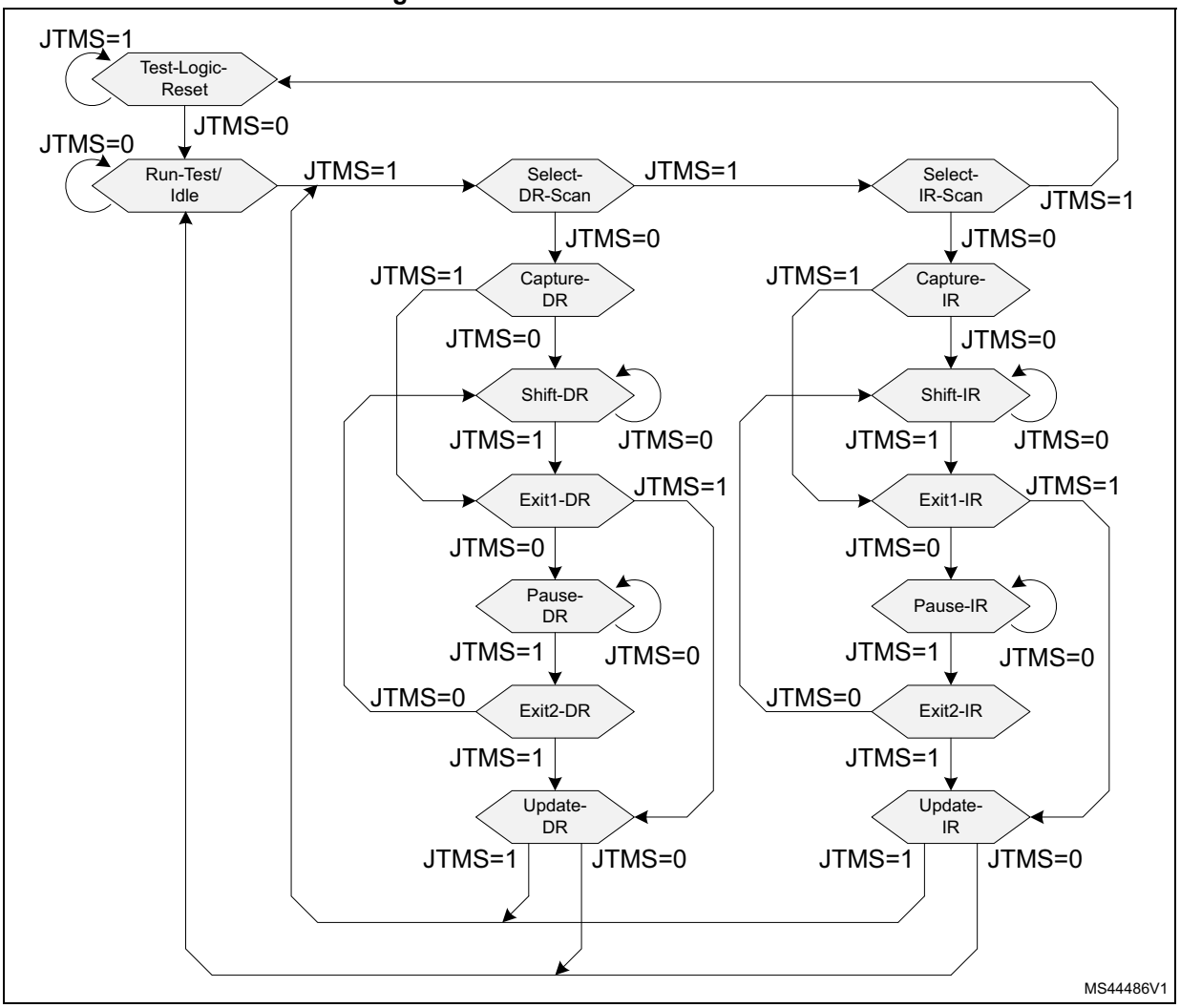

The operation of the JTAG-DP is as follows:

- When the TAPSM goes through the Capture-IR state, 0b0001 is transferred onto the Instruction register (IR) scan chain. The IR scan chain is connected between JTDI and JTDO.
- While the TAPSM is in the Shift-IR state, the IR scan chain shifts one bit for each rising edge of JTCK. This means that on the first tick:
  - The LSB of the IR scan chain is output on JTDO.
  - Bit[n] of the IR scan chain is transferred to bit[n-1].
  - The value on JTDI is transferred to the MSB of the IR scan chain.
- When the TAPSM goes through the Update-IR state, the value scanned into the IR scan chain is transferred into the Instruction register.
- When the TAPSM goes through the Capture-DR state, a value is transferred from one

of the Data registers onto one of the DR scan chains, connected between JTDI and JTDO.

- The value held in the Instruction register determines which Data register (and associated DR scan chain) is selected.
- This data is then shifted while the TAPSM is in the Shift-DR state, in the same manner as the IR shift in the Shift-IR state.
- When the TAPSM goes through the Update-DR state, the value scanned into the DR scan chain is transferred into the selected Data register.
- When the TAPSM is in the Run-Test/Idle state, no special actions occur. The IDCODE instruction is loaded in IR.

When active, the nJTRST signal resets the state machine asynchronously to the Test-Logic-Reset state.

The data registers corresponding to the 4-bit IR instructions are listed in *Table 207*. The total IR instruction length is 9 bits.

Table 207. JTAG-DP data registers

IR instruction	DR register	Scan chain length	Description
0000 to 0111	(BYPASS)	1	*Not implemented:* BYPASS selected
1000	ABORT	35	*ABORT register* – Bits 31:1 = Reserved – Bit 0 = APABORT: write 1 to generate an AP abort.
1001	(BYPASS)	1	*Reserved:* BYPASS selected
1010	DPACC	35	*Debug port access register* Initiates the debug port and gives access to a debug port register. – When transferring data IN: Bits 34:3 = DATA[31:0] = 32-bit data to transfer for a write request Bits 2:1 = A[3:2] = 2-bit address of a debug port register. Bit 0 = RnW = Read request (1) or write request (0). – When transferring data OUT: Bits 34:3 = DATA[31:0] = 32-bit data read following a read request Bits 2:0 = ACK[2:0] = 3-bit Acknowledge: 010 = OK/FAULT 001 = WAIT OTHER = reserved
1011	APACC	35	*Access port access register* Initiates an access port and gives access to an access port register. – When transferring data IN: Bits 34:3 = DATA[31:0] = 32-bit data to shift in for a write request Bits 2:1 = A[3:2] = 2-bit sub-address of an access port register. Bit 0 = RnW= Read request (1) or write request (0). – When transferring data OUT: Bits 34:3 = DATA[31:0] = 32-bit data read following a read request Bits 2:0 = ACK[2:0] = 3-bit Acknowledge: 010 = OK/FAULT 001 = WAIT OTHER = reserved
1100	(BYPASS)	1	*Reserved:* BYPASS selected

Table 207. JTAG-DP data registers (continued)

IR instruction	DR register	Scan chain length	Description
1101	(BYPASS)	1	*Reserved:* BYPASS selected
1110	IDCODE	32	*ID Code* 0x6BA0 0477: Arm® JTAG debug port ID code
1111	BYPASS	1	*Bypass* A single JTCK cycle delay is inserted between JTDI and JTDO

The DR registers are described in more detail in the Arm® Debug Interface Architecture Specification *[1]*.

33.4.2 SW debug port

The Serial Wire Debug protocol uses two pins:

- SWCLK: clock from host to target
- SWDIO: bi-directional serial data (100 kΩ pull-up required)

Serial data is transferred LSB first, synchronously with the clock. A transfer comprises three phases:

1. packet request (8 bits) transmitted by the host, see *Table 208*.
2. acknowledge response (3 bits) transmitted by the target, see *Table 209*.
3. data transfer (33 bits) transmitted by the host (in case of a write) or target (in case of a read), see *Table 210*.

The data transfer only occurs if the acknowledge response is OK.

Between each phase, if the direction of the data is reversed, a single clock cycle turn-around time is inserted.

Table 208. Packet request

Bit field	Name	Description
0	Start	Must be “1”
1	APnDP	– 0: DP register access - see *Table 207* for a list of DP registers – 1: AP register access - see *Section 33.5: Access ports*
2	RnW	– 0: Write request – 1: Read request
4:3	A(3:2)	Address field of the DP or AP register (refer to)
5	Parity	Single bit parity of preceding bits
6	Stop	0
7	Park	Not driven by host, must be read as “1” by target

Table 209. ACK response

Bit field	Name	Description
2:0	ACK	– 000: FAULT – 010: WAIT – 100: OK

Table 210. Data transfer

Bit field	Name	Description
31:0	WDATA or RDATA	Write or Read data
32	Parity	Single bit parity of 32 data bits

In the case of a FAULT or WAIT ACK response from the target, the data transfer phase is canceled, unless overrun detection is enabled: in this case the data is ignored by the target (in the case of a write), or not driven (in the case of a read).

A line reset must be generated by the host when it is first connected, or following a protocol error. The line reset consists in 50 or more SWCLK cycles with SWDIO high, followed by two SWCLK cycles with SWDIO low.

For more details on the Serial Wire debug protocol, refer to the Arm® Debug Interface Architecture Specification *[1]*.

Note: The SWJ-DP implements SWD protocol version 2.

33.4.3 Debug port registers

Both the SW-DP and the JTAG-DP access the debug port (DP) registers listed in *Table 211*.

The debugger can access the DP registers as follows:

- Program the A(3:2) field in the DPACC register, if using JTAG, with the register address within the bank. Program the RnW bit to select a Read or Write. In the case of a write, program the DATA field with the write data. If using SWD, the A(3:2) and RnW fields are part of the Packet Request word sent to the SW-DP with the APnDP bit reset (see *Table 208*). The write data are sent in the data phase.
- To access one of the banked DP registers at address 0x4, the register number must first be written to the DP_SELECT register at address 0x8. Any subsequent read or write to address 0x4 accesses the register corresponding to the content of the DP_SELECT register.

33.4.4 DP debug port identification register (DP_DPIDR)

Address offset: 0x0

Reset value: 0x5BA0 2477

Read only

31	30	29	28	27	26	25	24	23	22	21	20	19	18	17	16
REVISION[3:0]				PARTNO[7:0]								Res.	Res.	Res.	MIN
r	r	r	r	r	r	r	r	r	r	r	r				r

15	14	13	12	11	10	9	8	7	6	5	4	3	2	1	0
VERSION[3:0]				DESIGNER[10:0]											Res.
r	r	r	r	r	r	r	r	r	r	r	r	r	r	r	

Bits 31:28 **REVISION[3:0]**: Revision code
0x5

Bits 27:20 **PARTNO[7:0]**: Part number for the debug port
0xBA

Bits 19:17 Reserved, must be kept at reset value.

Bit 16 **MIN**: Minimal debug port (MINDP) implementation
0x0: MINDP not implemented (transaction counter and pushed operations are supported)

Bits 15:12 **VERSION[3:0]**: DP architecture version
0x2: DPv2

Bits 11:1 **DESIGNER[10:0]**: JEDEC designer identity code
0x23B: Arm® JEDEC code

Bit 0 Reserved, must be kept at reset value.

33.4.5 DP abort register (DP_ABORTR)

Address offset: 0x0

Reset value: 0x0000 0000

Write only

31	30	29	28	27	26	25	24	23	22	21	20	19	18	17	16
Res.	Res.	Res.	Res.	Res.	Res.	Res.	Res.	Res.	Res.	Res.	Res.	Res.	Res.	Res.	Res.

15	14	13	12	11	10	9	8	7	6	5	4	3	2	1	0
Res.	Res.	Res.	Res.	Res.	Res.	Res.	Res.	Res.	Res.	Res.	ORUNERR CLR	WDERR CLR	STKERR CLR	STKCMP CLR	DAPABORT
											w	r	r	r	

Bits 31:5 Reserved, must be kept at reset value.

Bit 4 **ORUNERRCLR**: Overrrun error clear
0: No effect
1: Clear CTRL/STAT.STICKYORUN bit

Bit 3 **WDERRCLR**: Write data error clear
0: No effect
1: Clear CTRL/STAT.WDATAERR bit

Bit 2 **STKERRCLR**: Sticky error clear
0: No effect
1: Clear CTRL/STAT.STICKYERR bit

Bit 1 **STKCMPCLR**: Sticky compare clear
0: No effect
1: Clear CTRL/STAT.STICKYCMP bit

Bit 0 **DAPABORT**: Aborts current AP transaction if an excessive number of WAIT responses are returned, indicating that the transaction is stalled.
0: No effect
1: Abort transaction

33.4.6 DP control and status register (DP_CTRL/STATR)

Address offset: 0x4 and DP_SELECTR.DPBANKSEL = 0

Reset value: 0x0000 0000

31	30	29	28	27	26	25	24	23	22	21	20	19	18	17	16
Res.	Res.	CDBGPWRUPACK	CDBGPWRUPREQ	Res.	Res.	Res.	Res.	TRNCNT[11:4]							
		r	r					r	r	r	r				r

15	14	13	12	11	10	9	8	7	6	5	4	3	2	1	0
TRNCNT[3:0]				CMASKLANE[3:0]				WDATAERR	READOK	STICKYERR	STICKYCMP	TRNMODE[1:0]		STICKYORUN	ORUNDETECT
r	r	r	r	r	r	r	r	r	r	r	r	r	r	r	

Bits 31:30 Reserved, must be kept at reset value.

Bit 29 **CDBGPWRUPACK**: See description in *Section 33.3.4: DBG clocks*.
0 = DAPCLK gated
1 = DAPCLK enabled

Bit 28 **CDBGPWRUPREQ**: Controls the DAPCLK enable request signal.
0 = Requests DAPCLK gating
1 = Requests DAPCLK enable

Bits 27:24 Reserved, must be kept at reset value.

Bits 23:12 **TRNCNT[11:0]**: Transaction counter. To program a sequence of transactions to incremental addresses via an AP, TRNCNT is loaded with the number of transactions to perform. It is decremented at the successful completion of each transaction.

Bits 11:8 **MASKLANE[3:0]**: Indicates the bytes to be masked in pushed-compare and pushed-verify operations (CTRL/STAT.TRNMODE = 1 or 2). In the pushed operations, the word supplied in an AP write transaction is compared with the current value at the target AP address.

0b1XXX = include byte lane 3 in comparisons
0bX1XX = include byte lane 2 in comparisons
0bXX1X = include byte lane 1 in comparisons
0bXXX1 = include byte lane 0 in comparisons

Bit 7 **WDATAERR**. Write data error (read only) in SW-DP. Indicates that:

– there is a a parity or framing error on the data phase of a write, or
– a write that has been accepted by the DP is then discarded without being submitted to the AP.

This bit is reset by writing 1 to the ABORT.WDERRCLR bit.

0: No error
1: Error has occurred

Reserved in JTAG-DP.

Bit 6 **READOK**. AP read response (read only) in SW-DP. Indicates the response to the last AP read access.

0: Read not OK
1: Read OK

Reserved in JTAG-DP.

Bit 5 **STICKYERR**. Transaction error (read only in SW-DP, R/W in JTAG-DP). Indicates that an error occurred in an AP transaction.

0: No error
1: Error has occurred

In the SW-DP, this bit is reset by writing 1 to the ABORT.STKERRCLR bit. In the JTAG-DP, this bit is reset by writing a 1 to it.

Bit 4 **STICKYCMP**. Compares match (read only in SW-DP, R/W in JTAG-DP). Indicates that a match occurred in a pushed operation.

0: Match if TRNMODE = 0x1; no match if TRNMODE = 0x2
1: No match if TRNMODE = 0x1; match if TRNMODE = 0x2

In the SW-DP, this bit is reset by writing 1 to the ABORT.STKCMPCLR bit. In the JTAG-DP, this bit is reset by writing a 1 to it.

Bits 3:2 **TRNMODE[1:0]**: Transfer mode for AP write operations (for read operations, this field must be set to 0x0).

0x0: Normal operation. AP transactions are passed directly to the AP.
0x1: Pushed-verify operation. The DP stores the write data and performs a read transaction at the target AP address. The result of the read is compared with the stored data and if they do not match, the STICKYCMP bit is set.
0x2: Pushed-compare operation. The DP stores the write data and performs a read transaction at the target AP address. The result of the read is compared with the stored data and if they match, the STICKYCMP bit is set.
0x3: reserved

In pushed operation, only the data bytes indicated by the MASKLANE field are included in the compare.

Bit 1 **STICKYORUN**. Overrun (read only in SW-DP, R/W in JTAG-DP). Indicates that an overrun occurred (new transaction received before previous transaction completed). This bit is only set if the ORUNDETECT bit is set.

0: No overrun

1: Overrun occurred

In the SW-DP, this bit is reset by writing 1 to the ABORT.ORUNERRCLR bit. In the JTAG-DP, this bit is reset by writing a 1 to it.

Bit 0 **ORUNDETECT**. Overrun detection mode enable.

0: Overrun detection disabled

1: Overrun detection enabled. In the event of an overrun, the STICKYORUN bit is set and subsequent transactions is blocked until the STICKYORUN bit is cleared.

33.4.7 DP data link control register (DP_DLCR)

Address offset: 0x4 and DP_SELECTR.DPBANKSEL = 1

Reset value: 0x0000 0040

31	30	29	28	27	26	25	24	23	22	21	20	19	18	17	16
Res.	Res.	Res.	Res.	Res.	Res.	Res.	Res.	Res.	Res.	Res.	Res.	Res.	Res.	Res.	Res.

15	14	13	12	11	10	9	8	7	6	5	4	3	2	1	0
Res.	Res.	Res.	Res.	Res.	Res.	TURNROUND[1:0]		Res.	Res.	Res.	Res.	Res.	Res.	Res.	Res.
						r	r								

Bits 31:10 Reserved, must be kept at reset value.

Bits 9:8 **TURNROUND[1:0]**: Tristate period for SWDIO.

0x0: 1 data bit period

0x1: 2 data bit periods

0x2: 3 data bit periods

0x3: 4 data bit periods

Bit 7 Reserved, must be kept at reset value.

Bit 6 Reserved, must be kept at reset value (set to 1).

Bits 5:0 Reserved, must be kept at reset value.

33.4.8 DP target identification register (DP_TARGETIDR)

Address offset: 0x4 and DP_SELECTR.DPBANKSEL = 2

Reset value: 0x0494 0041

31	30	29	28	27	26	25	24	23	22	21	20	19	18	17	16
TREVISION[3:0]				TPARTNO[15:4]											
r	r	r	r	r	r	r	r	r	r	r	r	r	r	r	r

15	14	13	12	11	10	9	8	7	6	5	4	3	2	1	0
TPARTNO[3:0]				TDESIGNER[10:0]											Res.
r	r	r	r	r	r	r	r	r	r	r	r	r	r	r	

Bits 31:28 **TREVISION**: Target revision.
0x0: revision 1

Bits 27:12 **TPARTNO**: Target part number.
0x4940: STM32WB15CC

Bits 11:1 **TDESIGNER**: Target designer JEDEC code.
0x020: STMicroelectronics

Bit 0 Reserved, must be kept at reset value (set to 1)

33.4.9 DP data link protocol identification register (DP_DLPIDR)

Address offset: 0x4 and DP_SELECTR.DPBANKSEL = 3

Reset value: 0x0000 0001

31	30	29	28	27	26	25	24	23	22	21	20	19	18	17	16
TINSTANCE[3:0]				Res.	Res.	Res.	Res.	Res.	Res.	Res.	Res.	Res.	Res.	Res.	Res.
r	r	r	r												
15	14	13	12	11	10	9	8	7	6	5	4	3	2	1	0
Res.	Res.	Res.	Res.	Res.	Res.	Res.	Res.	Res.	Res.	Res.	Res.	PROTSVN[3:0]			
												r	r	r	r

Bits 31:28 **TINSTANCE[3:0]**: Target instance number. Defines the instance number for this device in a multi-drop system.
0x0: Instance number 0

Bits 27:4 Reserved, must be kept at reset value.

Bits 3:0 **PROTSVN[3:0]**: Serial Wire Debug protocol version.
0x1: Version 2

33.4.10 DP resend register (DP_RESENDR)

Address offset: 0x8

Reset value: 0x0000 0000

31	30	29	28	27	26	25	24	23	22	21	20	19	18	17	16
RESEND[31:16]															
r	r	r	r	r	r	r	r	r	r	r	r	r	r	r	r
15	14	13	12	11	10	9	8	7	6	5	4	3	2	1	0
RESEND[15:0]															
r	r	r	r	r	r	r	r	r	r	r	r	r	r	r	r

Bits 31:0 **RESEND**: Returns the value that was returned by the last AP read or DP RDBUFF read. Used in the event of a corrupted read transfer.

33.4.11 DP access port select register (DP_SELECTR)

Address offset: 0x8

Reset value: Unknown

31	30	29	28	27	26	25	24	23	22	21	20	19	18	17	16
APSEL[7:0]								Res.	Res.	Res.	Res.	Res.	Res.	Res.	Res.
w	w	w	w	w	w	w	w								

15	14	13	12	11	10	9	8	7	6	5	4	3	2	1	0
Res.	Res.	Res.	Res.	Res.	Res.	Res.	Res.	APBANKSEL[3:0]				DPBANKSEL[3:0]			
								w	w	w	w	w	w	w	w

Bits 31:24 **APSEL[7:0]**: Access port select. Selects the access port for the next transaction.
0x0: AP0 - CPU1 (Cortex®-M4) debug access port (AHB-AP)
0x1: AP1 - CPU2 (Cortex®-M0+) debug access port (AHB-AP)
0x2 to 0xFF: reserved

Bits 27:8 Reserved, must be kept at reset value.

Bits 7:4 **APBANKSEL[3:0]**: AP register bank select. Selects the 4-word register bank on the active AP for the next transaction.

Bits 3:0 **DPBANKSEL[3:0]**: DP register bank select. Selects the register at address 0x4 of the debug port.
0x0: CTRL/STAT register
0x1: DLCR register
0x2: TARGETID register
0x3: DLPIDR register
0x4 to 0xF: Reserved

33.4.12 DP read buffer register (DP_BUFFR)

Address offset: 0xC

Reset value: 0x0000 0000

31	30	29	28	27	26	25	24	23	22	21	20	19	18	17	16
RDBUFF[31:16]															
r	r	r	r	r	r	r	r	r	r	r	r	r	r	r	r

15	14	13	12	11	10	9	8	7	6	5	4	3	2	1	0
RDBUFF[15:0]															
r	r	r	r	r	r	r	r	r	r	r	r	r	r	r	r

Bits 31:0 **RDBUFF[31:0]**: Contains the value that was returned by the last AP read access. The value returned by an AP read access can either be obtained using a second read access to the same address, which initiates a new transaction on the corresponding bus, or else it can be read from this register, in which case no new AP transaction occurs.

33.4.13 DP target selection register (DP_TARGETSELR)

Address offset: 0xC

Reset value: Unknown

31	30	29	28	27	26	25	24	23	22	21	20	19	18	17	16
TINSTANCE[3:0]				TPARTNO[15:4]											
w	w	w	w	w	w	w	w	w	w	w	w	w	w	w	w
15	14	13	12	11	10	9	8	7	6	5	4	3	2	1	0
TPARTNO[3:0]				TDESIGNER[10:0]											Res.
w	w	w	w	w	w	w	w	w	w	w	w	w	w	w	

Bits 31:28 **TINSTANCE[3:0]**: Target instance number. Defines the instance number for the target device in a multi-drop system. These bits must be written with the same value used for DLPIDR.TINSTANCE to select this device.

Bits 27:12 **TPARTNO[15:0]**: Target part number. Defines the part number for the target device. These bits must be written with the same value used for TARGETID.TPARTNO to select this device.

Bits 11:1 **TDESIGNER[10:0]**: Target designer JEDEC code. Defines the JEDEC code for the target device. These bits must be written with the same value used for TARGETID.TDESIGNER to select this device.

Bit 0 Reserved, must be kept at reset value (set to 1).

33.4.14 Debug port register map and reset values

These registers are not on the CPU memory bus, they are only accessed through SW-DP and JTAG-DP debug interface.

The debug port address is 2-bit wide, defined in the JTAG-DP register DPACC or SW-DP packet request A[3:2] field.

Table 211. Debug port register map and reset values

Offset	Register name	31	30	29	28	27	26	25	24	23	22	21	20	19	18	17	16	15	14	13	12	11	10	9	8	7	6	5	4	3	2	1	0
0b00	DP_DPIDR	REVISION [3:0]				PARTNO[7:0]								Res.	Res.	Res.	MIN	VERSION [3:0]				DESIGNER[10:0]											Res.
	Reset value	0	1	0	1	1	0	1	1	1	0	1	0				0	0	0	1	0	0	1	0	0	0	1	1	1	0	1	1	1
0b00	DP_ABORTR	Res.	Res.	Res.	Res.	Res.	Res.	Res.	Res.	Res.	Res.	Res.	Res.	Res.	Res.	Res.	Res.	Res.	Res.	Res.	Res.	Res.	Res.	Res.	Res.	Res.	Res.	Res.	ORUNERRCLR	WDERRCLR	STKERRCLR	STKCMPCLR	DAPABORT
	Reset value																												0	0	0	0	0
0b01(1)	DP_CTRL/STATR	Res.	Res.	CDBGPWRUPACK	CDBGPWRUPREQ	Res.	Res.	Res.	Res.	TRNCNT[11:0]												APPSET[3:0]				WDATAERR	READOK	STICKYERR	STICKYCMP	TRNMODE[1:0]		STICKYORUN	ORUNDETECT
	Reset value			0	0					0	0	0	0	0	0	0	0	0	0	0	0	0	0	0	0	0	0	0	0	0	0	0	0
0b01(1)	DP_DLCR	Res.	Res.	Res.	Res.	Res.	Res.	Res.	Res.	Res.	Res.	Res.	Res.	Res.	Res.	Res.	Res.	Res.	Res.	Res.	Res.	Res.	Res.	TURNROUND [1:0]		Res.	Res.	Res.	Res.	Res.	Res.	Res.	Res.
	Reset value																							0	0								
0b01(2)	DP_TARGETIDR	TREVISION [3:0]				TPARTNO[15:0]																TDESIGNER[10:0]											Res.
	Reset value	0	0	0	0	0	1	0	0	1	0	0	1	0	1	0	0	0	0	0	0	0	0	0	0	0	1	0	0	0	0	0	
0b01(3)	DP_DLPIDR	TINSTANCE [3:0]				Res.	Res.	Res.	Res.	Res.	Res.	Res.	Res.	Res.	Res.	Res.	Res.	Res.	Res.	Res.	Res.	Res.	Res.	Res.	Res.	Res.	Res.	Res.	Res.	PROTSVN [3:0]			
	Reset value	0	0	0	0																									0	0	0	1
0b10	DP_RESENDR	RESEND[0:31]																															
	Reset value	0	0	0	0	0	0	0	0	0	0	0	0	0	0	0	0	0	0	0	0	0	0	0	0	0	0	0	0	0	0	0	0
0b10	DP_SELECTR	APSEL[7:0]								Res.	Res.	Res.	Res.	Res.	Res.	Res.	Res.	Res.	Res.	Res.	Res.	Res.	Res.	Res.	Res.	APBANKSEL [3:0]				DPBANKSEL [3:0]			
	Reset value	x	x	x	x	x	x	x	x																	x	x	x	x	x	x	x	x
0b11	DP_BUFFR	RDBUFF[0:31]																															
	Reset value	0	0	0	0	0	0	0	0	0	0	0	0	0	0	0	0	0	0	0	0	0	0	0	0	0	0	0	0	0	0	0	0
0b11	DP_TERGETSELR	TINSTANCE [3:0]				TPARTNO[15:0]																TDESIGNER[10:0]											Res.
	Reset value	x	x	x	x	x	x	x	x	x	x	x	x	x	x	x	x	x	x	x	x	x	x	x	x	x	x	x	x	x	x	x	

1. DP_SELECTR.DPBANKSEL = 1.
2. DP_SELECTR.DPBANKSEL = 2.
3. DP_SELECTR.DPBANKSEL = 3.

33.5 Access ports

As shown in *Figure 315*, there are two access ports (AP) attached to the DP:

1. AP0: CPU1 (Cortex®-M4) access port (AHB-AP): enables access to the debug and trace features integrated in the Cortex®-M4 processor core via its internal AHB bus.
2. AP1: CPU2 (Cortex®-M0+) access port (AHB-AP): enables access to the debug and trace features integrated in the Cortex®-M0+ processor core via its internal AHB bus.

Both access ports are of type MEM-AP, the debug and trace component registers are mapped in the address space of the associated debug bus. The AP is seen by the debugger as a set of 32-bit registers organized in banks of four registers each. Some of these registers are used to configure or monitor the AP itself, while others are used to perform a transfer on the bus. The AP registers are listed in *Table 212*.

Figure 315. Debug and access port connections

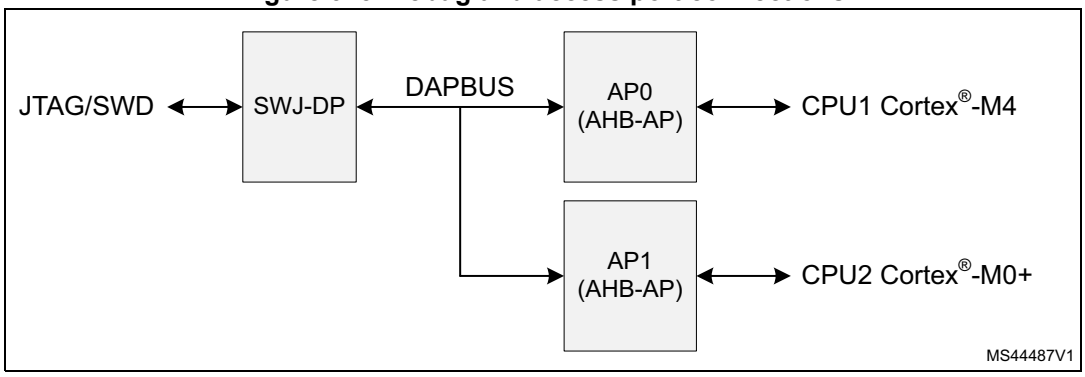

The address of the AP registers is composed of

- Bits [7:4]: content of the SELECT register APBANKSEL field in the DP (see *Section 33.4.11*)
- Bits [3:2]: content of the A(3:2) field of the APACC data register in the JTAG-DP (see *Table 211*) or of the SW-DP Packet Request (see *Table 208*), depending on the debug interface used
- Bits [1:0]: Always set to 0

The content of the SELECT register APSEL field in the DP defines which MEM-AP is being accessed.

The debugger can access the AP registers as follows:

1. Program the SELECT register APSEL field in the DP to choose one of the APs, and the APBANKSEL field to select the register bank to be accessed (see *Section 33.4.11*).
2. Program the A(3:2) field in the APACC register, if using JTAG, with the register address within the bank. Program the RnW bit to select a Read or Write. In the case of a write, program the DATA field with the write data. If using SWD, the A(3:2) and RnW fields are part of the Packet Request word sent to the SW-DP with the APnDP bit set (see *Table 208*). The write data is sent in the data phase.

The debugger can access the memory mapped debug component registers through the MEM-AP registers (i.e. using the above AP register access procedure) as follows:

1. Program the transaction target address in the TAR register.
2. Program the CSW register, if necessary, with the transfer parameters (AddrInc for example).
3. Write to or read from the DRW register to initiate a bus transaction at the address held in the TAR register. Alternatively, a read or write to Banked data register BDn triggers an access to address TAR[31:4] + n (this enables up to four consecutive addresses to be accessed without changing the address in the TAR register).

For more detailed information on the MEM-AP, refer to the Arm® Debug Interface Architecture Specification *[1]*.

33.5.1 AP control/status word register (AP_CSWR)

Address offset: 0x0

Reset value: 0x2300 0040

31	30	29	28	27	26	25	24	23	22	21	20	19	18	17	16
Res.	SPROT	Res.	PROT[4:0]					SPI STATUS	Res.	Res.	Res.	Res.	Res.	Res.	Res.
	r		r	r	r	r	r								

15	14	13	12	11	10	9	8	7	6	5	4	3	2	1	0
Res.	Res.	Res.	Res.	MODE[3:0]				TRIN PROG	DEVICE EN	ADDRIN[1:0]		Res.	SIZE[2:0]		
				r	r	r	r	r	r	r	r		r	r	r

Bit 31 Reserved, must be kept at reset value.

Bit 30 **SPROT**: Secure transfer request. In the AHB-APs this field sets the protection attribute HPROT[6] of the bus transfer.

0: If SPIDEN is high, secure transfer. If SPIDEN is low, non-secure transfer.
1: Non-secure transfer.

Bit 29 Reserved, must be kept at reset value.

Bits 28:24 **PROT[4:0]**: Bus transfer protection. In the AHB-APs this field sets the protection attributes HPROT[4:0] of the bus transfer.

0bXXXX0: Instruction fetch
0bXXXX1: Data access
0bXXX0X: User mode
0bXXX1X: Privileged mode
0bXX0XX: Non-bufferable
0bXX1XX: Bufferable
0bX0XXX: Non-cacheable
0bX1XXX: Cacheable
0b0XXXX: Non-exclusive
0b1XXXX: Exclusive

Bit 23 **SPISTATUS**: Status of SPIDEN option bit (read only). This signal determines whether the debugger can access secure memory.

0: Secure AHB transfers are blocked
1: Secure AHB transfers are allowed

Bits 22:12 Reserved, must be kept at reset value.

Bits 11:8 **MODE[3:0]**: Barrier support enabled. Defines if memory barrier operation is supported.

0x0: Not supported

Bit 7 **TRINPROG**: Transfer in progress (read only). Indicates if a bus transfer is in progress on the AP.

0x0: No transfer in progress.
0x1: Bus transfer in progress.

Bit 6 **DEVICEEN**: Device enabled (read only). Defines whether the AP can be accessed.

0x1: AP access enabled.

Bits 5:4 **ADDRINC[1:0]**: Auto-increment mode. Defines whether TAR address is automatically incremented after a transaction.

0x0: No auto-increment

0x1: Address is incremented by the size in bytes of the transaction (SIZE field).

0x2: Packed transfers enabled. A 32-bit AP access gives rise to 1 x 32-bit, 2 x 16-bit, or 4 x 8-bit bus transactions, corresponding to the programmed transaction size. Data are packed or unpacked accordingly.

0x3: reserved

Bit 3 Reserved, must be kept at reset value.

Bits 2:0 **SIZE[2:0]**: Size of next memory access transaction

0x0: Byte (8-bit)

0x1: Halfword (16-bit)

0x2: Word (32-bit)

0x3-0x7: reserved

33.5.2 AP transfer address register (AP_TAR)

Address offset: 0x04

Reset value: 0x0000 0000

31	30	29	28	27	26	25	24	23	22	21	20	19	18	17	16
TA[31:16]															
rw	rw	rw	rw	rw	rw	rw	rw	rw	rw	rw	rw	rw	rw	rw	rw
15	14	13	12	11	10	9	8	7	6	5	4	3	2	1	0
TA[15:0]															
rw	rw	rw	rw	rw	rw	rw	rw	rw	rw	rw	rw	rw	rw	rw	rw

Bits 31:0 **TA[31:0]:** Address of current transfer

33.5.3 AP data read/write register (AP_DRWR)

Address offset: 0x0C

Reset value: 0x0000 0000

31	30	29	28	27	26	25	24	23	22	21	20	19	18	17	16
TD[31:16]															
rw	rw	rw	rw	rw	rw	rw	rw	rw	rw	rw	rw	rw	rw	rw	rw
15	14	13	12	11	10	9	8	7	6	5	4	3	2	1	0
TD[15:0]															
rw	rw	rw	rw	rw	rw	rw	rw	rw	rw	rw	rw	rw	rw	rw	rw

Bits 31:0 **TD[31:0]:** Data of current transfer

33.5.4 AP banked data registers (AP_BD0-3R)

Address offset: 0x10 (DB0R)

Address offset: 0x14 (BD1R)

Address offset: 0x18 (BD2R)

Address offset: 0x1C (BD3R)

Reset value: 0x0000 0000

31	30	29	28	27	26	25	24	23	22	21	20	19	18	17	16
TBD[31:16]															
rw	rw	rw	rw	rw	rw	rw	rw	rw	rw	rw	rw	rw	rw	rw	rw
15	14	13	12	11	10	9	8	7	6	5	4	3	2	1	0
TBD[15:0]															
rw	rw	rw	rw	rw	rw	rw	rw	rw	rw	rw	rw	rw	rw	rw	rw

Bits 31:0 **TBD[31:0]:** Banked data of current transfer to address TAR. TA+ AP_BDnR address [3:2] + 0b00. Auto address incrementing is not performed on AP_BD0-3R. Banked transfers are only supported for word transfers.

33.5.5 AP base address register (AP_BASER)

Address offset: 0xF8

Reset value: 0xE00F F003 (AP0), 0xF000 0003 (AP1)

31	30	29	28	27	26	25	24	23	22	21	20	19	18	17	16
BASEADDR[19:4]															
r	r	r	r	r	r	r	r	r	r	r	r	r	r	r	r
15	14	13	12	11	10	9	8	7	6	5	4	3	2	1	0
BASEADDR[3:0]				Res.	Res.	Res.	Res.	Res.	Res.	Res.	Res.	Res.	Res.	FORMAT	ENTRY PRESENT
r	r	r	r											r	r

Bits 31:12 **BASEADDR[19:0]**: Base address (bits 31 to 12) of ROM table for the AP. The twelve LSBs are 0 since the ROM table must be aligned on a 4-Kbyte boundary.
AP0 CPU1 (Cortex®-M4) AHB-AP: 0xE00FF
AP1 CPU2 (Cortex®-M0+) AHB-AP: 0xF0000

Bits 11:2 Reserved, must be kept at reset value.

Bit 1 **FORMAT**: Base address register format.
1: Arm® debug interface v5

Bit 0 **ENTRYPRESENT**: Indicates that debug components are present on the access port bus.
1: Debug components are present

33.5.6 AP identification register (AP_IDR)

Address offset: 0xFC

Reset value: 0x2477 0011 (AP0), 0x6477 0001 (AP1)

Read only

31	30	29	28	27	26	25	24	23	22	21	20	19	18	17	16
REVISION[3:0]				JEDECBANK[3:0]				JEDECCODE[6:0]							MEMAP
r	r	r	r	r	r	r	r	r	r	r	r	r	r	r	r
15	14	13	12	11	10	9	8	7	6	5	4	3	2	1	0
Res.	Res.	Res.	Res.	Res.	Res.	Res.	Res.	IDENTITY[7:0]							
								r	r	r	r	r	r	r	r

Bits 31:28 **REVISION[3:0]**:
0x2: r0p3
0x6: r0p7

Bits 27:24 **JEDECBANK[3:0]**: JEDEC bank.
0x4: Arm®

Bits 23:17 **JEDECCODE[6:0]**: JEDEC code.
0x3B: Arm®

Bit 16 **MEMAP**: Memory access port.
0x1: Standard register map

Bits 15:8 Reserved, must be kept at reset value.

Bits 7:0 **IDENTITY[7:0]**: Identifies the type of AP.
0x11: CPU1 (Cortex®-M4) AHB-AP (AP0)
0x01: CPU2 (Cortex®-M0+) AHB-AP (AP1)

33.5.7 Access port register map and reset values

These registers are not on the CPU memory bus, they are only accessed through SW-DP and JTAG-DP debug interface.

The access port address is 8-bit wide, defined by debug port register DP_SELECTR.APBANKSEL[3:0] field, and by JTAG-DP register DPACC or SW-DP packet request A[3:2] field.

Table 212. Access port register map and reset values

Offset	Register name	31	30	29	28	27	26	25	24	23	22	21	20	19	18	17	16	15	14	13	12	11	10	9	8	7	6	5	4	3	2	1	0
0x00	AP_CSWR	Res.	SPROT	Res.	PROT[4:0]					SPISTATUS	Res.	Res.	Res.	Res.	Res.	Res.	Res.	Res.	Res.	Res.	Res.	MODE[3:0]				TRINPROG [1:0]		ADDRIN [1:0]		Res.	SIZE [2:0]		
	Reset value		0		0	0	0	1	1	0												0	0	0	0	0	1	0	0		0	0	0
0x04	AP_TAR	TA[0:31]																															
	Reset value	0	0	0	0	0	0	0	0	0	0	0	0	0	0	0	0	0	0	0	0	0	0	0	0	0	0	0	0	0	0	0	0
0x0C	AP_DRWR	TD[0:31]																															
	Reset value	0	0	0	0	0	0	0	0	0	0	0	0	0	0	0	0	0	0	0	0	0	0	0	0	0	0	0	0	0	0	0	0
0x10	AP_BD0R	TBD[0:31]																															
	Reset value	0	0	0	0	0	0	0	0	0	0	0	0	0	0	0	0	0	0	0	0	0	0	0	0	0	0	0	0	0	0	0	0
0x14	AP_BD1R	TBD[0:31]																															
	Reset value	0	0	0	0	0	0	0	0	0	0	0	0	0	0	0	0	0	0	0	0	0	0	0	0	0	0	0	0	0	0	0	0
0x18	AP_BD2R	TBD[0:31]																															
	Reset value	0	0	0	0	0	0	0	0	0	0	0	0	0	0	0	0	0	0	0	0	0	0	0	0	0	0	0	0	0	0	0	0
0x1C	AP_BD3R	TBD[0:31]																															
	Reset value	0	0	0	0	0	0	0	0	0	0	0	0	0	0	0	0	0	0	0	0	0	0	0	0	0	0	0	0	0	0	0	0
0xF8	AP_BASER	BASEADDR[0:19]																														FORMAT	ENTRYPRESENT
	Reset value (AP0)	1	1	1	0	0	0	0	0	0	0	0	0	1	1	1	1	1	1	1	1	0	0	0	0	0	0	0	0	0	0	1	1
	Reset value (AP1)	1	1	1	1	0	0	0	0	0	0	0	0	0	0	0	0	0	0	0	0	0	0	0	0	0	0	0	0	0	0	1	1
0xFC	AP_IDR	REVilSION [3:0]				JEDECBANK [3:0]				JEDECCODE[6:0]							MEMAP	Res.	Res.	Res.	Res.	Res.	Res.	Res.	Res.	IDENTITY[7:0]							
	Reset value (AP0)	0	0	1	0	0	1	0	0	0	1	1	1	0	1	1	1									0	0	0	1	0	0	0	1
	Reset value (AP1)	0	1	1	0	0	1	0	0	0	1	1	1	0	1	1	1									0	0	0	0	0	0	0	1

33.6 Cross trigger interface (CTI) and matrix (CTM)

The Cross trigger interfaces (CTIs) and Cross trigger matrix (CTM), taken together, form the CoreSight™ embedded cross trigger (see *Figure 316*).

There are two CTI components, one dedicated to the CPU2 and one dedicated to the CPU1. The CTIs are connected to each other via the CTM. The CTI registers are accessible to the debugger via the corresponding access port and associated AHB.

Figure 316. Embedded cross trigger

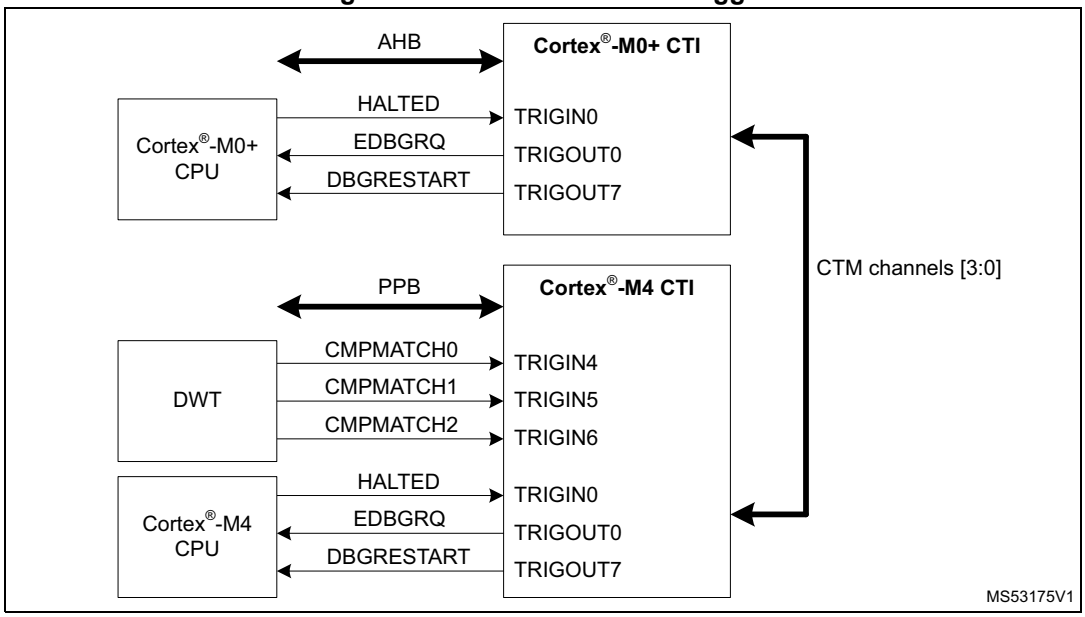

The CTIs enable events from various sources to trigger debug and/or trace activity. For example, a breakpoint reached in one of the processor cores can stop the other processor, or a transition detected on an external trigger input can start code trace.

Each CTI has up to eight trigger inputs and eight trigger outputs. Any input can be connected to any output, on the same CTI, or on another CTI via the CTM.

The trigger input and output signals for each CTI are listed in tables *213* to *216*.

Table 213. CPU2 CTI inputs

No.	Source signal	Source component	Comments
0	HALTED	CPU2	CPU2 halted - Indicates CPU2 is in debug mode
1	-	-	Not used
2	-	-	Not used
3	-	-	Not used
4	-	-	Not used
5	-	-	Not used
6	-	-	Not used
7	-	-	Not used

Table 214. CPU2 CTI outputs

No.	Output signal	Destination component	Comments
0	EDBGRQ	CPU2	CPU2 halt request - Puts CPU2 in debug mode
1	-	-	Not used
2	-	-	Not used
3	-	-	Not used
4	-	-	Not used
5	-	-	Not used
6	-	-	Not used
7	DBGRESTART	CPU2	CPU2 restart request - CPU2 exits debug mode

Table 215. CPU1 CTI inputs

No.	Source signal	Source component	Comments
0	HALTED	CPU1	CPU1 halted - Indicates CPU1 is in debug mode
1	-	-	Not used
2	-	-	Not used
3	-	-	Not used
4	CMPMATCH0	CPU1 DWT	DWT comparator 0 match
5	CMPMATCH1	CPU1 DWT	DWT comparator 1 match
6	CMPMATCH2	CPU1 DWT	DWT comparator 2 match
7	-	-	Not used

Table 216. CPU1 CTI outputs

No.	Source signal	Source component	Comments
0	EDBGRQ	CPU1	CPU1 halt request - Puts CPU1 in debug mode
1	-	-	Not used
2	-	-	Not used
3	-	-	Not used
4	-	-	Not used
5	-	-	Not used
6	-	-	Not used
7	DBGRESTART	CPU1	CPU1 restart request - CPU1 exits debug mode

There are four event channels in the cross trigger matrix, thus enabling up to four, parallel, bidirectional connections between trigger inputs and outputs on different CTIs. To connect input number *m* on CTI *x* to output number *n* on CTI *y*, the input must be connected to an event channel *p* using the CTIINEN*m* register of CTI *x*. The same channel *p* must be connected to the output using the CTIOUTEN*n* register of CTI *y*.

Note: This applies even if the input and output belong to the same CTI.

An input can be connected to more than one channel (up to four), so an input can be routed to several outputs. Similarly, an output can be connected to several inputs. It is also possible to connect several inputs/outputs to the same channel.

Figure 317. Mapping trigger inputs to outputs

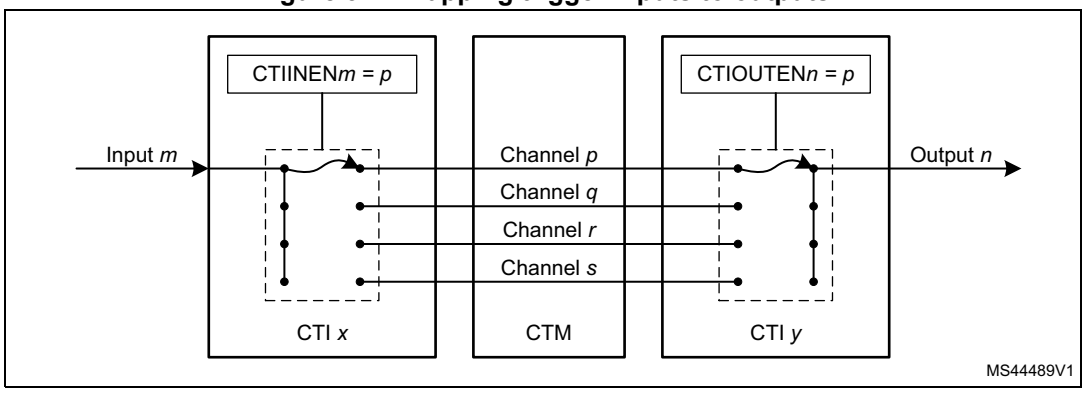

Example configurations

When either CPU core hits a breakpoint, stop the other core. Restart the two cores synchronously.

To stop both cores when one of them stops the HALTED output of each core must be connected to the EDBGRQ input of the opposite core.

Referring to *Table 213* and *Table 215*, we see that the HALTED signal from the CPU2 is connected to input 0 of the CPU2 CTI, and the same signal from the CPU1 is connected to the same input on the CPU1 CTI. Hence we program the CTIIEN0 register on each CTI to connect these inputs to a CTM channel (eg. channel 0).

From *Table 214* and *Table 216* we see that the EDBGRQ signals to the CPUs are connected to output 0 of the respective CTIs. So we program the CTIOUTEN0 register on each CTI to connect these outputs to the same CTM channel.

To restart both cores simultaneously the debugger must use the APPPULSE register in one of the CTIs. This allows the debugger to generate a pulse on any of the four CTM channels. The channel must be connected to the DBGRESTART signal of both cores.

From *Table 214* and *Table 216* we see that the DBGRESTART signals to the CPUs are connected to output 1 of the respective CTIs. So we program the CTIOUTEN1 register on each CTI, to connect these outputs to an unused CTM channel (e.g. channel 1).

The above configuration is illustrated in *Figure 318*.

Figure 318. Cross trigger configuration example

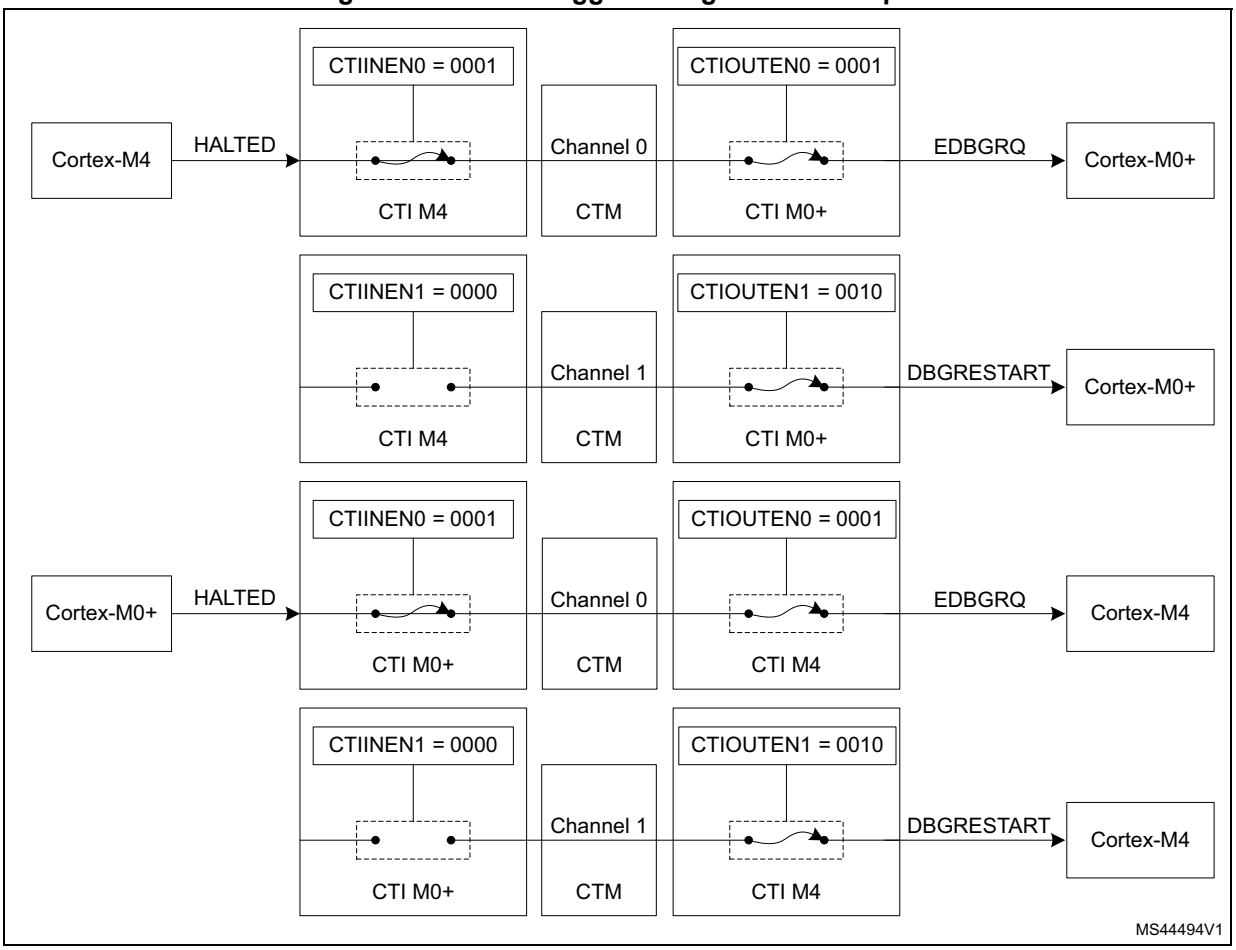

To force the processors to restart simultaneously, use the following procedure:

1. Clear the debug request by writing 0x01, then 0x00, to the CTIINTACK register in each CTI.
2. Cause a pulse on channel 1 by writing 0x02 to the APPPULSE register in either CTI. This generates a restart request to both processors.

   Note that the debugger can also force both cores to stop simultaneously by writing 0x01 to the APPPULSE register in either CTI, which generates a pulse on channel 0.

For more information on the Cross-Trigger Interface CoreSight™ component refer to the Arm® CoreSight™ SoC-400 Technical Reference Manual *[2]*.

33.7 Cross trigger interface registers

The register file base address is 0xE0043000 for CPU1 CTI and 0xF0001000 for CPU2 CTI. CPU1 CTI and CPU2 CTI are accessed via different access ports. The registers are the same for each CTI.

33.7.1 CTI control register (CTI_CONTROLR)

Address offset: 0x000

Reset value: 0x0000 0000

31	30	29	28	27	26	25	24	23	22	21	20	19	18	17	16
Res.	Res.	Res.	Res.	Res.	Res.	Res.	Res.	Res.	Res.	Res.	Res.	Res.	Res.	Res.	Res.

15	14	13	12	11	10	9	8	7	6	5	4	3	2	1	0
Res.	Res.	Res.	Res.	Res.	Res.	Res.	Res.	Res.	Res.	Res.	Res.	Res.	Res.	Res.	GLBEN
															rw

Bits 31:1 Reserved, must be kept at reset value.

Bit 0 **GLBEN**: Global enable.

0: Cross-triggering disabled

1: Cross-triggering enabled

33.7.2 CTI trigger acknowledge register (CTI_INTACKR)

Address offset: 0x010

Reset value: 0x0000 0000

31	30	29	28	27	26	25	24	23	22	21	20	19	18	17	16
Res.	Res.	Res.	Res.	Res.	Res.	Res.	Res.	Res.	Res.	Res.	Res.	Res.	Res.	Res.	Res.

15	14	13	12	11	10	9	8	7	6	5	4	3	2	1	0
Res.	Res.	Res.	Res.	Res.	Res.	Res.	Res.	INTACK[7:0]							
								rw	rw	rw	rw	rw	rw	rw	rw

Bits 31:8 Reserved, must be kept at reset value.

Bit 7:0 **INTACK[7:0]**: Trigger acknowledge.

There is one bit of the register for each CTITRIGOUT output. When a 1 is written to a bit in this register, the corresponding CTITRIGOUT output is acknowledged, causing it to be cleared.

33.7.3 CTI application trigger set register (CTI_APPSETR)

Address offset: 0x014

Reset value: 0x0000 0000

31	30	29	28	27	26	25	24	23	22	21	20	19	18	17	16
Res.	Res.	Res.	Res.	Res.	Res.	Res.	Res.	Res.	Res.	Res.	Res.	Res.	Res.	Res.	Res.

15	14	13	12	11	10	9	8	7	6	5	4	3	2	1	0
Res.	Res.	Res.	Res.	Res.	Res.	Res.	Res.	Res.	Res.	Res.	Res.	APPSET[3:0]			
												rw			

Bits 31:4 Reserved, must be kept at reset value.

Bit 3:0 **APPSET[3:0]**: Set channel event.

Read:

0bXXX0: Channel 0 event inactive
0bXXX1: Channel 0 event active
0bXX0X: Channel 1 event inactive
0bXX1X: Channel 1 event active
0bX0XX: Channel 2 event inactive
0bX1XX: Channel 2 event active
0b0XXX: Channel 3 event inactive
0b1XXX: Channel 3 event active

Write:

0bXXX0: No effect
0bXXX1: Set event on Channel 0
0bXX0X: No effect
0bXX1X: Set event on Channel 1
0bX0XX: No effect
0bX1XX: Set event on Channel 2
0b0XXX: No effect
0b1XXX: Set event on Channel 3

33.7.4 CTI application trigger clear register (CTI_APPCLEAR)

Address offset: 0x018

Reset value: 0x0000 0000

31	30	29	28	27	26	25	24	23	22	21	20	19	18	17	16
Res.	Res.	Res.	Res.	Res.	Res.	Res.	Res.	Res.	Res.	Res.	Res.	Res.	Res.	Res.	Res.

15	14	13	12	11	10	9	8	7	6	5	4	3	2	1	0
Res.	Res.	Res.	Res.	Res.	Res.	Res.	Res.	Res.	Res.	Res.	Res.	APPCLEAR[3:0]			
												w			

Bits 31:4 Reserved, must be kept at reset value.

Bit 3:0 **APPCLEAR[3:0]**: Clear channel event.
0b0000: No effect
0bXXX1: Clear event on Channel 0
0bXX1X: Clear event on Channel 1
0bX1XX: Clear event on Channel 2
0b1XXX: Clear event on Channel 3

33.7.5 CTI application pulse register (CTI_APPPULSER)

Address offset: 0x01C

Reset value: 0x0000 0000

31	30	29	28	27	26	25	24	23	22	21	20	19	18	17	16
Res.	Res.	Res.	Res.	Res.	Res.	Res.	Res.	Res.	Res.	Res.	Res.	Res.	Res.	Res.	Res.

15	14	13	12	11	10	9	8	7	6	5	4	3	2	1	0
Res.	Res.	Res.	Res.	Res.	Res.	Res.	Res.	Res.	Res.	Res.	Res.	APPPULSE[3:0]			
												w			

Bits 31:4 Reserved, must be kept at reset value.

Bit 3:0 **APPPULSE[3:0]**: Pulse channel event. This register clears itself immediately.
0b0000: No effect
0bXXX1: Generate pulse on Channel 0
0bXX1X: Generate pulse on Channel 1
0bX1XX: Generate pulse on Channel 2
0b1XXX: Generate pulse on Channel 3

33.7.6 CTI trigger In x enable register (CTI_INENRx)

Address offset: 0x020 + 4 * x, where x = 0 to 7

Reset value: 0x0000 0000

31	30	29	28	27	26	25	24	23	22	21	20	19	18	17	16
Res.	Res.	Res.	Res.	Res.	Res.	Res.	Res.	Res.	Res.	Res.	Res.	Res.	Res.	Res.	Res.

15	14	13	12	11	10	9	8	7	6	5	4	3	2	1	0
Res.	Res.	Res.	Res.	Res.	Res.	Res.	Res.	Res.	Res.	Res.	Res.	TRIGINEN[3:0]			
												rw			

Bits 31:4 Reserved, must be kept at reset value.

Bit 3:0 **TRIGINEN[3:0]**: Enables or disables a cross trigger event on each of the four channels when CTITRIGINx is activated (x = 0 to 7).

0b0000: Trigger does not generate events on Channels
0bXXX1: Trigger n generates events on Channel 0
0bXX1X: Trigger n generates events on Channel 1
0bX1XX: Trigger n generates events on Channel 2
0b1XXX: Trigger n generates events on Channel 3

33.7.7 CTI trigger out x enable register (CTI_OUTENRx)

Address offset: 0x0A0 + 4 * x, where x = 0 to 7

Reset value: 0x0000 0000

31	30	29	28	27	26	25	24	23	22	21	20	19	18	17	16
Res.	Res.	Res.	Res.	Res.	Res.	Res.	Res.	Res.	Res.	Res.	Res.	Res.	Res.	Res.	Res.

15	14	13	12	11	10	9	8	7	6	5	4	3	2	1	0
Res.	Res.	Res.	Res.	Res.	Res.	Res.	Res.	Res.	Res.	Res.	Res.	TRIGOUTEN[3:0]			
												rw	rw	rw	rw

Bits 31:4 Reserved, must be kept at reset value.

Bit 3:0 **TRIGOUTEN[3:0]**: For each channel, defines whether an event on that channel generates a trigger on CTITRIGOUTx (x = 0 to 7).

0b0000: Channel events do not generate triggers on Trigger outputs
0bXXX1: Channel 0 events generate triggers on Trigger output n
0bXX1X: Channel 1 events generate triggers on Trigger output n
0bX1XX: Channel 2 events generate triggers on Trigger output n
0b1XXX: Channel 3 events generate triggers on Trigger output n

33.7.8 CTI trigger in status register (CTI_TRGISTSR)

Address offset: 0x130

Reset value: 0x0000 0000

31	30	29	28	27	26	25	24	23	22	21	20	19	18	17	16
Res.	Res.	Res.	Res.	Res.	Res.	Res.	Res.	Res.	Res.	Res.	Res.	Res.	Res.	Res.	Res.

15	14	13	12	11	10	9	8	7	6	5	4	3	2	1	0
Res.	Res.	Res.	Res.	Res.	Res.	Res.	Res.	TRIGINSTATUS[7:0]							
								r	r	r	r	r	r	r	r

Bits 31:8 Reserved, must be kept at reset value.

Bit 7:0 **TRIGINSTATUS[7:0]**: Trigger input status.

There is one bit of the register for each CTITRIGIN input. When a bit is set to 1 it indicates that the corresponding trigger input is active. When it is set to 0, the corresponding trigger input is inactive.

33.7.9 CTI trigger out status register (CTI_TRGOSTSR)

Address offset: 0x134

Reset value: 0x0000 0000

31	30	29	28	27	26	25	24	23	22	21	20	19	18	17	16
Res.	Res.	Res.	Res.	Res.	Res.	Res.	Res.	Res.	Res.	Res.	Res.	Res.	Res.	Res.	Res.

15	14	13	12	11	10	9	8	7	6	5	4	3	2	1	0
Res.	Res.	Res.	Res.	Res.	Res.	Res.	Res.	TRIGOUTSTATUS[7:0]							
								r	r	r	r	r	r	r	r

Bits 31:8 Reserved, must be kept at reset value.

Bit 7:0 **TRIGOUTSTATUS[7:0]**: Trigger output status.

There is one bit of the register for each CTITRIGOUT output. When a bit is set to 1 it indicates that the corresponding trigger output is active. When it is set to 0, the corresponding trigger output is inactive.

33.7.10 CTI channel in status register (CTI_CHINSTSR)

Address offset: 0x138

Reset value: 0x0000 0000

31	30	29	28	27	26	25	24	23	22	21	20	19	18	17	16
Res.	Res.	Res.	Res.	Res.	Res.	Res.	Res.	Res.	Res.	Res.	Res.	Res.	Res.	Res.	Res.

15	14	13	12	11	10	9	8	7	6	5	4	3	2	1	0
Res.	Res.	Res.	Res.	Res.	Res.	Res.	Res.	Res.	Res.	Res.	Res.	CHINSTATUS[3:0]			
												r	r	r	r

Bits 31:4 Reserved, must be kept at reset value.

Bit 3:0 **CHINSTATUS[3:0]**: Channel input status.

There is one bit of the register for each channel input. When a bit is set to 1 it indicates that the corresponding channel input is active. When it is set to 0, the corresponding channel input is inactive.

33.7.11 CTI channel out status register (CTI_CHOUTSTSR)

Address offset: 0x13C

Reset value: 0x0000 0000

31	30	29	28	27	26	25	24	23	22	21	20	19	18	17	16
Res.	Res.	Res.	Res.	Res.	Res.	Res.	Res.	Res.	Res.	Res.	Res.	Res.	Res.	Res.	Res.

15	14	13	12	11	10	9	8	7	6	5	4	3	2	1	0
Res.	Res.	Res.	Res.	Res.	Res.	Res.	Res.	Res.	Res.	Res.	Res.	CHOUTSTATUS[3:0]			
												r	r	r	r

Bits 31:4 Reserved, must be kept at reset value.

Bit 3:0 **CHOUTSTATUS[3:0]**: Channel output status.

There is one bit of the register for each channel output. When a bit is set to 1 it indicates that the corresponding channel output is active. When it is set to 0, the corresponding channel output is inactive.

33.7.12 CTI channel gate register (CTI_GATER)

Address offset: 0x140

Reset value: 0x0000 000F

31	30	29	28	27	26	25	24	23	22	21	20	19	18	17	16
Res.	Res.	Res.	Res.	Res.	Res.	Res.	Res.	Res.	Res.	Res.	Res.	Res.	Res.	Res.	Res.

15	14	13	12	11	10	9	8	7	6	5	4	3	2	1	0
Res.	Res.	Res.	Res.	Res.	Res.	Res.	Res.	Res.	Res.	Res.	Res.	GATEEN[3:0]			
												rw	rw	rw	rw

Bits 31:4 Reserved, must be kept at reset value.

Bit 3:0 **GATEEN[3:0]**: Channel output enable. For each channel, defines whether an event on that channel can propagate over the CTM to other CTIs.

0b0000: Channels events do not propagate
0bXXX1: Channel 0 events propagate
0bXX1X: Channel 1 events propagate
0bX1XX: Channel 2 events propagate
0b1XXX: Channel 3 events propagate

33.7.13 CTI claim tag set register (CTI_CLAIMSETR)

Address offset: 0xFA0

Reset value: 0x0000 000F

31	30	29	28	27	26	25	24	23	22	21	20	19	18	17	16
Res.	Res.	Res.	Res.	Res.	Res.	Res.	Res.	Res.	Res.	Res.	Res.	Res.	Res.	Res.	Res.

15	14	13	12	11	10	9	8	7	6	5	4	3	2	1	0
Res.	Res.	Res.	Res.	Res.	Res.	Res.	Res.	Res.	Res.	Res.	Res.	CLAIMSET[3:0]			
												rw	rw	rw	rw

Bits 31:4 Reserved, must be kept at reset value.

Bits 3:0 **CLAIMSET[3:0]**: Set claim tag bits
Write:
0000: No effect
xxx1: Set bit 0
xx1x: Set bit 1
x1xx: Set bit 2
1xxx: Set bit 3
Read:
0xF: Indicates there are four bits in claim tag

33.7.14 CTI claim tag clear register (CTI_CLAIMCLR)

Address offset: 0xFA4

Reset value: 0x0000 0000

31	30	29	28	27	26	25	24	23	22	21	20	19	18	17	16
Res.	Res.	Res.	Res.	Res.	Res.	Res.	Res.	Res.	Res.	Res.	Res.	Res.	Res.	Res.	Res.

15	14	13	12	11	10	9	8	7	6	5	4	3	2	1	0
Res.	Res.	Res.	Res.	Res.	Res.	Res.	Res.	Res.	Res.	Res.	Res.	CLAIMCLR[3:0]			
												rw	rw	rw	rw

Bits 31:4 Reserved, must be kept at reset value.

Bits 3:0 **CLAIMCLR[3:0]**: Reset claim tag bits
Write:
0000: No effect
xxx1: Clear bit 0
xx1x: Clear bit 1
x1xx: Clear bit 2
1xxx: Clear bit 3
Read: Returns current value of claim tag

33.7.15 CTI lock access register (CTI_LAR)

Address offset: 0xFB0

Reset value: N/A

31	30	29	28	27	26	25	24	23	22	21	20	19	18	17	16
ACCESS_W[31:16]															
w	w	w	w	w	w	w	w	w	w	w	w	w	w	w	w

15	14	13	12	11	10	9	8	7	6	5	4	3	2	1	0
ACCESS_W[15:0]															
w	w	w	w	w	w	w	w	w	w	w	w	w	w	w	w

Bits 31:0 **ACCESS_W[31:0]**: Enables write access to some CTI registers by processor cores (debuggers do not need to unlock the component)

0xC5AC CE55: Write access enabled

Other values: Write access disabled

33.7.16 CTI lock status register (CTI_LSR)

Address offset: 0xFB4

Reset value: 0x0000 0003

31	30	29	28	27	26	25	24	23	22	21	20	19	18	17	16
Res.	Res.	Res.	Res.	Res.	Res.	Res.	Res.	Res.	Res.	Res.	Res.	Res.	Res.	Res.	Res.

15	14	13	12	11	10	9	8	7	6	5	4	3	2	1	0
Res.	Res.	Res.	Res.	Res.	Res.	Res.	Res.	Res.	Res.	Res.	Res.	Res.	LOCK TYPE	LOCK GRANT	LOCK EXIST
													r	r	r

Bits 31:3 Reserved, must be kept at reset value.

Bit 2 **LOCKTYPE**: Indicates the size of the CTI_LAR register

0: 32-bit

Bit 1 **LOCKGRANT**: Current status of lock. This bit always reads as zero by an external debugger.

0: Write access is permitted

1: Write access is blocked. Only reads are permitted.

Bit 0 **LOCKEXIST**: Indicates whether a lock control mechanism exists. This bit always reads as zero by an external debugger.

0: No lock control mechanism exists.

1: Lock control mechanism is implemented

33.7.17 CTI authentication status register (CTI_AUTHSTATR)

Address offset: 0xFB8

Reset value: 0x0000 000A

31	30	29	28	27	26	25	24	23	22	21	20	19	18	17	16
Res.	Res.	Res.	Res.	Res.	Res.	Res.	Res.	Res.	Res.	Res.	Res.	Res.	Res.	Res.	Res.

15	14	13	12	11	10	9	8	7	6	5	4	3	2	1	0
Res.	Res.	Res.	Res.	Res.	Res.	Res.	Res.	SNID[1:0]		SID[1:0]		NSNID[1:0]		NSID[1:0]	
								r	r	r	r	r	r	r	r

Bits 31:8 Reserved, must be kept at reset value.

Bits 7:6 **SNID[1:0]**: Security level for secure non-invasive debug

0x0: Not implemented

Bits 5:4 **SID[1:0]**: Security level for secure invasive debug
0x0: Not implemented

Bits 3:2 **NSNID[1:0]**: Security level for non-secure non-invasive debug
0x2: Disabled
0x3: Enabled

Bits 1:0 **NSID[1:0]**: Security level for non-secure invasive debug
0x2: Disabled
0x3: Enabled

33.7.18 CTI device configuration register (CTI_DEVIDR)

Address offset: 0xFC8

Reset value: 0x0004 0800

31	30	29	28	27	26	25	24	23	22	21	20	19	18	17	16
Res.	Res.	Res.	Res.	Res.	Res.	Res.	Res.	Res.	Res.	Res.	Res.	NUMCH[3:0]			
												r	r	r	r

15	14	13	12	11	10	9	8	7	6	5	4	3	2	1	0
NUMTRIG[7:0]								Res.	Res.	Res.	EXTMUXNUM[4:0]				
r	r	r	r	r	r	r	r				r	r	r	r	r

Bits 31:20 Reserved, must be kept at reset value.

Bits 19:16 **NUMCH[3:0]**: Number of ECT channels available
0x4: 4 channels

Bits 15:8 **NUMTRIG[7:0]**: Number of ECT triggers available
0x8: 8 trigger inputs and 8 trigger outputs

Bits 7:5 Reserved, must be kept at reset value.

Bits 4:0 **EXTMUXNUM[4:0]**: Number of trigger input/output multiplexers
0x0: None

33.7.19 CTI device type identifier register (CTI_DEVTYPER)

Address offset: 0xFCC

Reset value: 0x0000 0014

31	30	29	28	27	26	25	24	23	22	21	20	19	18	17	16
Res.	Res.	Res.	Res.	Res.	Res.	Res.	Res.	Res.	Res.	Res.	Res.	Res.	Res.	Res.	Res.

15	14	13	12	11	10	9	8	7	6	5	4	3	2	1	0
Res.	Res.	Res.	Res.	Res.	Res.	Res.	Res.	SUBTYPE[3:0]				MAJORTYPE[3:0]			
								r	r	r	r	r	r	r	r

Bits 31:8 Reserved, must be kept at reset value.

Bits 7:4 **SUBTYPE[3:0]**: Sub-classification
0x1: Indicates that this component is a cross-triggering component.

Bits 3:0 **MAJORTYPE[3:0]**: Major classification
0x4: Indicates that this component allows a debugger to control other components in a CoreSight™ SoC-400 system.

33.7.20 CTI CoreSight peripheral identity register 4 (CTI_PIDR4)

Address offset: 0xFD0

Reset value: 0x0000 0004

31	30	29	28	27	26	25	24	23	22	21	20	19	18	17	16
Res.	Res.	Res.	Res.	Res.	Res.	Res.	Res.	Res.	Res.	Res.	Res.	Res.	Res.	Res.	Res.

15	14	13	12	11	10	9	8	7	6	5	4	3	2	1	0
Res.	Res.	Res.	Res.	Res.	Res.	Res.	Res.	4KCOUNT[3:0]				JEP106CON[3:0]			
								r	r	r	r	r	r	r	r

Bits 31:8 Reserved, must be kept at reset value.

Bits 7:4 **4KCOUNT[3:0]**: register file size
0x0: Register file occupies a single 4 KB region

Bits 3:0 **JEP106CON[3:0]**: JEP106 continuation code
0x4: Arm® JEDEC code

33.7.21 CTI CoreSight peripheral identity register 0 (CTI_PIDR0)

Address offset: 0xFE0

Reset value: 0x0000 0006

31	30	29	28	27	26	25	24	23	22	21	20	19	18	17	16
Res.	Res.	Res.	Res.	Res.	Res.	Res.	Res.	Res.	Res.	Res.	Res.	Res.	Res.	Res.	Res.

15	14	13	12	11	10	9	8	7	6	5	4	3	2	1	0
Res.	Res.	Res.	Res.	Res.	Res.	Res.	Res.	PARTNUM[7:0]							
								r	r	r	r	r	r	r	r

Bits 31:8 Reserved, must be kept at reset value.

Bits 7:0 **PARTNUM[7:0]**: Part number bits [7:0]
0x06: CTI part number

33.7.22 CTI CoreSight peripheral identity register 1 (CTI_PIDR1)

Address offset: 0xFE4

Reset value: 0x0000 00B9

31	30	29	28	27	26	25	24	23	22	21	20	19	18	17	16
Res.	Res.	Res.	Res.	Res.	Res.	Res.	Res.	Res.	Res.	Res.	Res.	Res.	Res.	Res.	Res.
15	14	13	12	11	10	9	8	7	6	5	4	3	2	1	0
Res.	Res.	Res.	Res.	Res.	Res.	Res.	Res.	JEP106ID[3:0]				PARTNUM[11:8]			
								r	r	r	r	r	r	r	r

Bit 31:8 Reserved, must be kept at reset value.

Bits 7:4 **JEP106ID[3:0]**: JEP106 identity code bits [3:0]
0xB: Arm® JEDEC code

Bits 3:0 **PARTNUM[11:8]**: Part number bits [11:8]
0x9: CTI part number

33.7.23 CTI CoreSight peripheral identity register 2 (CTI_PIDR2)

Address offset: 0xFE8

Reset value: 0x0000 004B

31	30	29	28	27	26	25	24	23	22	21	20	19	18	17	16
Res.	Res.	Res.	Res.	Res.	Res.	Res.	Res.	Res.	Res.	Res.	Res.	Res.	Res.	Res.	Res.
15	14	13	12	11	10	9	8	7	6	5	4	3	2	1	0
Res.	Res.	Res.	Res.	Res.	Res.	Res.	Res.	REVISION[3:0]				JEDEC	JEP106ID[6:4]		
								r	r	r	r	r	r	r	r

Bit 31:8 Reserved, must be kept at reset value.

Bit s 7:4 **REVISION[3:0]**: Component revision number
0x4: r0p5

Bit 3 **JEDEC**: JEDEC assigned value
0x1: Designer ID specified by JEDEC

Bits 2:0 **JEP106ID[6:4]**: JEP106 identity code bits [6:4]
0x3: Arm® JEDEC code

33.7.24 CTI CoreSight peripheral identity register 3 (CTI_PIDR3)

Address offset: 0xFEC

Reset value: 0x0000 0000

31	30	29	28	27	26	25	24	23	22	21	20	19	18	17	16
Res.	Res.	Res.	Res.	Res.	Res.	Res.	Res.	Res.	Res.	Res.	Res.	Res.	Res.	Res.	Res.

15	14	13	12	11	10	9	8	7	6	5	4	3	2	1	0
Res.	Res.	Res.	Res.	Res.	Res.	Res.	Res.	REVAND[3:0]				CMOD[3:0]			
								r	r	r	r	r	r	r	r

Bit 31:8 Reserved, must be kept at reset value.

Bits 7:4 **REVAND[3:0]**: metal fix version
0x0: No metal fix

Bits 3:0 **CMOD[3:0]**: Customer modified
0x0: No customer modifications

33.7.25 CTI CoreSight component identity register 0 (CTI_CIDR0)

Address offset: 0xFF0

Reset value: 0x0000 000D

31	30	29	28	27	26	25	24	23	22	21	20	19	18	17	16
Res.	Res.	Res.	Res.	Res.	Res.	Res.	Res.	Res.	Res.	Res.	Res.	Res.	Res.	Res.	Res.

15	14	13	12	11	10	9	8	7	6	5	4	3	2	1	0
Res.	Res.	Res.	Res.	Res.	Res.	Res.	Res.	PREAMBLE[7:0]							
								r	r	r	r	r	r	r	r

Bits 31:8 Reserved, must be kept at reset value.

Bits 7:0 **PREAMBLE[7:0]**: Component ID bits [7:0]
0x0D: Common ID value

33.7.26 CTI CoreSight peripheral identity register 1 (CTI_CIDR1)

Address offset: 0xFF4

Reset value: 0x0000 0090

31	30	29	28	27	26	25	24	23	22	21	20	19	18	17	16
Res.	Res.	Res.	Res.	Res.	Res.	Res.	Res.	Res.	Res.	Res.	Res.	Res.	Res.	Res.	Res.

15	14	13	12	11	10	9	8	7	6	5	4	3	2	1	0
Res.	Res.	Res.	Res.	Res.	Res.	Res.	Res.	CLASS[3:0]				PREAMBLE[11:8]			
								r	r	r	r	r	r	r	r

Bit 31:8 Reserved, must be kept at reset value.

Bits 7:4 **CLASS[3:0]**: Component ID bits [15:12] - component class
0x9: CoreSight™ component

Bits 3:0 **PREAMBLE[11:8]**: Component ID bits [11:8]
0x0: Common ID value

33.7.27 CTI CoreSight component identity register 2 (CTI_CIDR2)

Address offset: 0xFF8

Reset value: 0x0000 0005

31	30	29	28	27	26	25	24	23	22	21	20	19	18	17	16
Res.	Res.	Res.	Res.	Res.	Res.	Res.	Res.	Res.	Res.	Res.	Res.	Res.	Res.	Res.	Res.
15	14	13	12	11	10	9	8	7	6	5	4	3	2	1	0
Res.	Res.	Res.	Res.	Res.	Res.	Res.	Res.	PREAMBLE[19:12]							
								r	r	r	r	r	r	r	r

Bits 31:8 Reserved, must be kept at reset value.

Bits 7:0 **PREAMBLE[19:12]**: Component ID bits [23:16]
0x05: Common ID value

33.7.28 CTI CoreSight component identity register 3 (CTI_CIDR3)

Address offset: 0xFFC

Reset value: 0x0000 00B1

31	30	29	28	27	26	25	24	23	22	21	20	19	18	17	16
Res.	Res.	Res.	Res.	Res.	Res.	Res.	Res.	Res.	Res.	Res.	Res.	Res.	Res.	Res.	Res.
15	14	13	12	11	10	9	8	7	6	5	4	3	2	1	0
Res.	Res.	Res.	Res.	Res.	Res.	Res.	Res.	PREAMBLE[27:20]							
								r	r	r	r	r	r	r	r

Bits 31:8 Reserved, must be kept at reset value.

Bits 7:0 **PREAMBLE[27:20]**: Component ID bits [31:24]
0xB1: Common ID value

33.7.29 CTI register map and reset values

Table 217. CTI register map and reset values

Offset	Register name	31	30	29	28	27	26	25	24	23	22	21	20	19	18	17	16	15	14	13	12	11	10	9	8	7	6	5	4	3	2	1	0
0x000	CTI_CONTROLR	Res.	Res.	Res.	Res.	Res.	Res.	Res.	Res.	Res.	Res.	Res.	Res.	Res.	Res.	Res.	Res.	Res.	Res.	Res.	Res.	Res.	Res.	Res.	Res.	Res.	Res.	Res.	Res.	Res.	Res.	Res.	GLBEN
	Reset value																																0
0x010	CTI_INTACKR	Res.	Res.	Res.	Res.	Res.	Res.	Res.	Res.	Res.	Res.	Res.	Res.	Res.	Res.	Res.	Res.	Res.	Res.	Res.	Res.	Res.	Res.	Res.	Res.	INTACK[7:0]							
	Reset value																									0	0	0	0	0	0	0	0
0x014	CTI_APPSETR	Res.	Res.	Res.	Res.	Res.	Res.	Res.	Res.	Res.	Res.	Res.	Res.	Res.	Res.	Res.	Res.	Res.	Res.	Res.	Res.	Res.	Res.	Res.	Res.	Res.	Res.	Res.	Res.	APPSET[3:0]			
	Reset value																													0	0	0	0
0x018	CTI_APPCLEAR	Res.	Res.	Res.	Res.	Res.	Res.	Res.	Res.	Res.	Res.	Res.	Res.	Res.	Res.	Res.	Res.	Res.	Res.	Res.	Res.	Res.	Res.	Res.	Res.	Res.	Res.	Res.	Res.	APPCLEAR [3:0]			
	Reset value																													0	0	0	0
0x01C	CTI_APPPULSER	Res.	Res.	Res.	Res.	Res.	Res.	Res.	Res.	Res.	Res.	Res.	Res.	Res.	Res.	Res.	Res.	Res.	Res.	Res.	Res.	Res.	Res.	Res.	Res.	Res.	Res.	Res.	Res.	APPPULSE [3:0]			
	Reset value																													0	0	0	0
0x020	CTI_INENR0	Res.	Res.	Res.	Res.	Res.	Res.	Res.	Res.	Res.	Res.	Res.	Res.	Res.	Res.	Res.	Res.	Res.	Res.	Res.	Res.	Res.	Res.	Res.	Res.	Res.	Res.	Res.	Res.	TRIGINEN [3:0]			
	Reset value																													0	0	0	0
0x024	CTI_INENR1	Res.	Res.	Res.	Res.	Res.	Res.	Res.	Res.	Res.	Res.	Res.	Res.	Res.	Res.	Res.	Res.	Res.	Res.	Res.	Res.	Res.	Res.	Res.	Res.	Res.	Res.	Res.	Res.	TRIGINEN [3:0]			
	Reset value																													0	0	0	0
0x028	CTI_INENR2	Res.	Res.	Res.	Res.	Res.	Res.	Res.	Res.	Res.	Res.	Res.	Res.	Res.	Res.	Res.	Res.	Res.	Res.	Res.	Res.	Res.	Res.	Res.	Res.	Res.	Res.	Res.	Res.	TRIGINEN [3:0]			
	Reset value																													0	0	0	0
0x02C	CTI_INENR3	Res.	Res.	Res.	Res.	Res.	Res.	Res.	Res.	Res.	Res.	Res.	Res.	Res.	Res.	Res.	Res.	Res.	Res.	Res.	Res.	Res.	Res.	Res.	Res.	Res.	Res.	Res.	Res.	TRIGINEN [3:0]			
	Reset value																													0	0	0	0
0x030	CTI_INENR4	Res.	Res.	Res.	Res.	Res.	Res.	Res.	Res.	Res.	Res.	Res.	Res.	Res.	Res.	Res.	Res.	Res.	Res.	Res.	Res.	Res.	Res.	Res.	Res.	Res.	Res.	Res.	Res.	TRIGINEN [3:0]			
	Reset value																													0	0	0	0
0x034	CTI_INENR5	Res.	Res.	Res.	Res.	Res.	Res.	Res.	Res.	Res.	Res.	Res.	Res.	Res.	Res.	Res.	Res.	Res.	Res.	Res.	Res.	Res.	Res.	Res.	Res.	Res.	Res.	Res.	Res.	TRIGINEN [3:0]			
	Reset value																													0	0	0	0
0x038	CTI_INENR6	Res.	Res.	Res.	Res.	Res.	Res.	Res.	Res.	Res.	Res.	Res.	Res.	Res.	Res.	Res.	Res.	Res.	Res.	Res.	Res.	Res.	Res.	Res.	Res.	Res.	Res.	Res.	Res.	TRIGINEN [3:0]			
	Reset value																													0	0	0	0
0x03C	CTI_INENR7	Res.	Res.	Res.	Res.	Res.	Res.	Res.	Res.	Res.	Res.	Res.	Res.	Res.	Res.	Res.	Res.	Res.	Res.	Res.	Res.	Res.	Res.	Res.	Res.	Res.	Res.	Res.	Res.	TRIGINEN [3:0]			
	Reset value																													0	0	0	0
0x0A0	CTI_OUTENR0	Res.	Res.	Res.	Res.	Res.	Res.	Res.	Res.	Res.	Res.	Res.	Res.	Res.	Res.	Res.	Res.	Res.	Res.	Res.	Res.	Res.	Res.	Res.	Res.	Res.	Res.	Res.	Res.	TRIGOUTEN [3:0]			
	Reset value																													0	0	0	0
0x0S4	CTI_OUTENR1	Res.	Res.	Res.	Res.	Res.	Res.	Res.	Res.	Res.	Res.	Res.	Res.	Res.	Res.	Res.	Res.	Res.	Res.	Res.	Res.	Res.	Res.	Res.	Res.	Res.	Res.	Res.	Res.	TRIGOUTEN [3:0]			
	Reset value																													0	0	0	0
0x0S8	CTI_OUTENR2	Res.	Res.	Res.	Res.	Res.	Res.	Res.	Res.	Res.	Res.	Res.	Res.	Res.	Res.	Res.	Res.	Res.	Res.	Res.	Res.	Res.	Res.	Res.	Res.	Res.	Res.	Res.	Res.	TRIGOUTEN [3:0]			
	Reset value																													0	0	0	0

Table 217. CTI register map and reset values (continued)

Offset	Register name	31	30	29	28	27	26	25	24	23	22	21	20	19	18	17	16	15	14	13	12	11	10	9	8	7	6	5	4	3	2	1	0
0x0SC	CTI_OUTENR3	Res.	Res.	Res.	Res.	Res.	Res.	Res.	Res.	Res.	Res.	Res.	Res.	Res.	Res.	Res.	Res.	Res.	Res.	Res.	Res.	Res.	Res.	Res.	Res.	Res.	Res.	Res.	Res.	TRIGOUTEN [3:0]			
	Reset value																													0	0	0	0
0x0B0	CTI_OUTENR4	Res.	Res.	Res.	Res.	Res.	Res.	Res.	Res.	Res.	Res.	Res.	Res.	Res.	Res.	Res.	Res.	Res.	Res.	Res.	Res.	Res.	Res.	Res.	Res.	Res.	Res.	Res.	Res.	TRIGOUTEN [3:0]			
	Reset value																													0	0	0	0
0x0B4	CTI_OUTENR5	Res.	Res.	Res.	Res.	Res.	Res.	Res.	Res.	Res.	Res.	Res.	Res.	Res.	Res.	Res.	Res.	Res.	Res.	Res.	Res.	Res.	Res.	Res.	Res.	Res.	Res.	Res.	Res.	TRIGOUTEN [3:0]			
	Reset value																													0	0	0	0
0x0B8	CTI_OUTENR6	Res.	Res.	Res.	Res.	Res.	Res.	Res.	Res.	Res.	Res.	Res.	Res.	Res.	Res.	Res.	Res.	Res.	Res.	Res.	Res.	Res.	Res.	Res.	Res.	Res.	Res.	Res.	Res.	TRIGOUTEN [3:0]			
	Reset value																													0	0	0	0
0x0BC	CTI_OUTENR7	Res.	Res.	Res.	Res.	Res.	Res.	Res.	Res.	Res.	Res.	Res.	Res.	Res.	Res.	Res.	Res.	Res.	Res.	Res.	Res.	Res.	Res.	Res.	Res.	Res.	Res.	Res.	Res.	TRIGOUTEN [3:0]			
	Reset value																													0	0	0	0
0x130	CTI_TRIGISTSR	Res.	Res.	Res.	Res.	Res.	Res.	Res.	Res.	Res.	Res.	Res.	Res.	Res.	Res.	Res.	Res.	Res.	Res.	Res.	Res.	Res.	Res.	Res.	Res.	TRIGINSTATUS[7:0]							
	Reset value																									0	0	0	0	0	0	0	0
0x134	CTI_TRIGOSTSR	Res.	Res.	Res.	Res.	Res.	Res.	Res.	Res.	Res.	Res.	Res.	Res.	Res.	Res.	Res.	Res.	Res.	Res.	Res.	Res.	Res.	Res.	Res.	Res.	TRIGOUTSTATUS[7:0]							
	Reset value																									0	0	0	0	0	0	0	0
0x138	CTI_CHINSTSR	Res.	Res.	Res.	Res.	Res.	Res.	Res.	Res.	Res.	Res.	Res.	Res.	Res.	Res.	Res.	Res.	Res.	Res.	Res.	Res.	Res.	Res.	Res.	Res.	Res.	Res.	Res.	Res.	CHISTATUS [3:0]			
	Reset value																													0	0	0	0
0x13C	CTI_CHOUTSTSR	Res.	Res.	Res.	Res.	Res.	Res.	Res.	Res.	Res.	Res.	Res.	Res.	Res.	Res.	Res.	Res.	Res.	Res.	Res.	Res.	Res.	Res.	Res.	Res.	Res.	Res.	Res.	Res.	CHOSTATUS [3:0]			
	Reset value																													0	0	0	0
0x140	CTI_GATER	Res.	Res.	Res.	Res.	Res.	Res.	Res.	Res.	Res.	Res.	Res.	Res.	Res.	Res.	Res.	Res.	Res.	Res.	Res.	Res.	Res.	Res.	Res.	Res.	Res.	Res.	Res.	Res.	GATEEN[3:0]			
	Reset value																													1	1	1	1
0xFA0	CTI_CLAIMSETR	Res.	Res.	Res.	Res.	Res.	Res.	Res.	Res.	Res.	Res.	Res.	Res.	Res.	Res.	Res.	Res.	Res.	Res.	Res.	Res.	Res.	Res.	Res.	Res.	Res.	Res.	Res.	Res.	CLAIMSET [3:0]			
	Reset value																													1	1	1	1
0xFA4	CTI_CLAIMCLR	Res.	Res.	Res.	Res.	Res.	Res.	Res.	Res.	Res.	Res.	Res.	Res.	Res.	Res.	Res.	Res.	Res.	Res.	Res.	Res.	Res.	Res.	Res.	Res.	Res.	Res.	Res.	Res.	CLAIMCLR [3:0]			
	Reset value																													0	0	0	0
0xFB0	CTI_LAR	KEY																															
	Reset value																																
0xFB4	CTI_LSR	Res.	Res.	Res.	Res.	Res.	Res.	Res.	Res.	Res.	Res.	Res.	Res.	Res.	Res.	Res.	Res.	Res.	Res.	Res.	Res.	Res.	Res.	Res.	Res.	Res.	Res.	Res.	Res.	Res.	NTT	SLK	SLI
	Reset value																														0	1	1
0xFB8	CTI_AUTHSTATR	Res.	Res.	Res.	Res.	Res.	Res.	Res.	Res.	Res.	Res.	Res.	Res.	Res.	Res.	Res.	Res.	Res.	Res.	Res.	Res.	Res.	Res.	Res.	Res.	SNID[1:0]		SID[1:0]		NSNID[1:0]		NSID[1:0]	
	Reset value																									0	0	0	0	0	1	0	1
0xFC8	CTI_DEVIDR	Res.	Res.	Res.	Res.	Res.	Res.	Res.	Res.	Res.	Res.	Res.	Res.	NUMCH[3:0]				NUMTRIG[7:0]								Res.	Res.	Res.	Res.	EXMUXNUM [4:0]			
	Reset value													0	1	0	0	0	0	0	0	1	0	0	0				0	0	0	0	0
0xFCC	CTI_DEVTYPER	Res.	Res.	Res.	Res.	Res.	Res.	Res.	Res.	Res.	Res.	Res.	Res.	Res.	Res.	Res.	Res.	Res.	Res.	Res.	Res.	Res.	Res.	Res.	Res.	SUB[3:0]				MAJOR[3:0]			
	Reset value																									0	0	0	1	0	1	0	0

Table 217. CTI register map and reset values (continued)

Offset	Register name	31	30	29	28	27	26	25	24	23	22	21	20	19	18	17	16	15	14	13	12	11	10	9	8	7	6	5	4	3	2	1	0
0xFD0	CTI_PIDR4	Res.	Res.	Res.	Res.	Res.	Res.	Res.	Res.	Res.	Res.	Res.	Res.	Res.	Res.	Res.	Res.	Res.	Res.	Res.	Res.	Res.	Res.	Res.	Res.	Res.	Res.	Res.	Res.	JEP106CON [3:0]			
	Reset value																									0	0	0	0	0	1	0	0
0xFE0	CTI_PIDR0	Res.	Res.	Res.	Res.	Res.	Res.	Res.	Res.	Res.	Res.	Res.	Res.	Res.	Res.	Res.	Res.	Res.	Res.	Res.	Res.	Res.	Res.	Res.	Res.	PARTNUM[7:0]							
	Reset value																									0	0	0	0	0	1	1	0
0xFE4	CTI_PIDR1	Res.	Res.	Res.	Res.	Res.	Res.	Res.	Res.	Res.	Res.	Res.	Res.	Res.	Res.	Res.	Res.	Res.	Res.	Res.	Res.	Res.	Res.	Res.	Res.	JEP106ID [3:0]				PARTNUM [11:8]			
	Reset value																									1	0	1	1	1	0	0	1
0xFE8	CTI_PIDR2	Res.	Res.	Res.	Res.	Res.	Res.	Res.	Res.	Res.	Res.	Res.	Res.	Res.	Res.	Res.	Res.	Res.	Res.	Res.	Res.	Res.	Res.	Res.	Res.	REVISION [3:0]				JEDEC	JEP106ID [6:4]		
	Reset value																									0	1	0	0	1	0	1	1
0xFEC	CTI_PIDR3	Res.	Res.	Res.	Res.	Res.	Res.	Res.	Res.	Res.	Res.	Res.	Res.	Res.	Res.	Res.	Res.	Res.	Res.	Res.	Res.	Res.	Res.	Res.	Res.	REVAND[3:0]				CMOD[3:0]			
	Reset value																									0	0	0	0	0	0	0	0
0xFF0	CTI_CIDR0	Res.	Res.	Res.	Res.	Res.	Res.	Res.	Res.	Res.	Res.	Res.	Res.	Res.	Res.	Res.	Res.	Res.	Res.	Res.	Res.	Res.	Res.	Res.	Res.	PREAMBLE[7:0]							
	Reset value																									0	0	0	0	1	1	0	1
0xFF4	CTI_CIDR1	Res.	Res.	Res.	Res.	Res.	Res.	Res.	Res.	Res.	Res.	Res.	Res.	Res.	Res.	Res.	Res.	Res.	Res.	Res.	Res.	Res.	Res.	Res.	Res.	CLASS[3:0]				PREAMBLE[11:8]			
	Reset value																									1	0	0	1	0	0	0	0
0xFF8	CTI_CIDR2	Res.	Res.	Res.	Res.	Res.	Res.	Res.	Res.	Res.	Res.	Res.	Res.	Res.	Res.	Res.	Res.	Res.	Res.	Res.	Res.	Res.	Res.	Res.	Res.	PREAMBLE[19:12]							
	Reset value																									0	0	0	0	0	1	0	1
0xFFC	CTI_CIDR3	Res.	Res.	Res.	Res.	Res.	Res.	Res.	Res.	Res.	Res.	Res.	Res.	Res.	Res.	Res.	Res.	Res.	Res.	Res.	Res.	Res.	Res.	Res.	Res.	PREAMBLE[27:20]							
	Reset value																									1	0	1	1	0	0	0	1

Refer to *Section 33.9: CPU2 ROM tables* and to *Section 33.13: CPU1 ROM table* for the register boundary addresses.

33.8 Microcontroller debug unit (DBGMCU)

The DBGMCU is a component containing a number of registers that control the power and clock behavior in debug mode. It allows the debugger (or the debug software) to:

- maintain the clock and power the CPU1 processor core when in low power modes (Sleep, Stop or Standby), CPU2 operation is not influenced in low power debug mode
- maintain the clock and power the system debug and trace components when in low power modes
- stop the clock to certain peripherals (watchdogs, timers, RTC) when either processor core is stopped in debug mode

The DBGMCU registers are not reset by a system reset, only by a power on reset. They are accessible to the debugger via the CPU1 AHB access port at base address 0xE0042000.

Note: The DBGMCU is not a standard CoreSight™ component, consequently it does not appear in the CPU1 ROM table.

33.8.1 DBGMCU identity code register (DBGMCU_IDCODE)

Address offset: 0x000

Reset value: 0x2000 6494

31	30	29	28	27	26	25	24	23	22	21	20	19	18	17	16
REV_ID[15:0]															
r	r	r	r	r	r	r	r	r	r	r	r	r	r	r	r
15	14	13	12	11	10	9	8	7	6	5	4	3	2	1	0
Res.	Res.	Res.	Res.	DEV_ID[11:0]											
				r	r	r	r	r	r	r	r	r	r	r	r

Bits 31:16 **REV_ID[15:0]**: Revision
0x2000 = Revision B (2.0)
0x2001 = Revision Z (2.1)

Bits 15:12 Reserved, must be kept at reset value.

Bits 11:0 **DEV_ID[11:0]**: Device ID
0x494: STM32WB15CC

33.8.2 DBGMCU configuration register (DBGMCU_CR)

Address offset: 0x004

Reset value: 0x0000 0000

31	30	29	28	27	26	25	24	23	22	21	20	19	18	17	16
Res.	Res.	Res.	TRGOEN	Res.	Res.	Res.	Res.	Res.	Res.	Res.	Res.	Res.	Res.	Res.	Res.
			rw												

15	14	13	12	11	10	9	8	7	6	5	4	3	2	1	0
Res.	Res.	Res.	Res.	Res.	Res.	Res.	Res.	Res.	Res.	TRACE _IOEN	Res.	Res.	DBG_ STANDBY	DBG_ STOP	DBG_ SLEEP
										rw			rw	rw	rw

Bits 31:29 Reserved, must be kept at reset value.

Bit 28 **TRGOEN**: External trigger out/put enable. This bit controls the direction of the bi-directional trigger pin, TRIG_INOUT.

0: Input. TRIG_INOUT is connected to TRGIN.

1: Output. TRIG_INOUT is connected to TRGOUT.

Bits 27:6 Reserved, must be kept at reset value.

Bit 5 **TRACE_IOEN**: Trace port and clock enable. This bit enables the trace port clock, TRACECLK.

0: Disabled.

1: Enabled.

Bits 4:3 Reserved, must be kept at reset value.

Bit 2 **DBG_STANDBY**: Allow debug of the CPU1 in STANDBY and SHUTDOWN modes, no influence on CPU2 operation.

0: Normal operation. All clocks are disabled and the device powered down automatically in STANDBY and SHUTDOWN modes.

1: Automatic clock stop/power down disabled. All active CPU1 clocks and oscillators continue to run during STANDBY and SHUTDOWN modes, and the device supply is maintained, allowing full CPU1 debug capability. On exit from STANDBY and SHUTDOWN modes, a device reset is performed.

Note: On exit from STANDBY no power reset is performed, a system reset is generated, and the wakeup clock is not HSI16, but MSI when DBG_STANDBY is set.

Bit 1 **DBG_STOP**: Allow debug of the CPU1 in STOP mode, no influence on CPU2 operation.

0: Normal operation. All CPU1 clocks are disabled automatically in STOP mode

1: Automatic clock stop disabled. All active clocks and oscillators continue to run during STOP mode, allowing full CPU1 debug capability. On exit from STOP mode, the clock settings are set to the STOP mode exit state.

Bit 0 **DBG_SLEEP**: Allow debug of the CPU1 in SLEEP mode, no influence on CPU2 operation.

0: Normal operation. Processor clock is stopped automatically in SLEEP mode

1: Automatic clock stop disabled. CPU1 processor clock continue to run, resulting in full CPU1 debug capability

33.8.3 DBGMCU CPU1 APB1 peripheral freeze register 1 (DBGMCU_APB1FZR1)

Address offset: 0x03C

Reset value: 0x0000 0000

31	30	29	28	27	26	25	24	23	22	21	20	19	18	17	16
DBG_ LPTIM1_ STOP	Res.	Res.	Res.	Res.	Res.	Res.	Res.	Res.	Res.	DBG_ I2C1_ STOP	Res.	Res.	Res.	Res.	Res.
rw										rw					

15	14	13	12	11	10	9	8	7	6	5	4	3	2	1	0
Res.	Res.	Res.	DBG_ IWDG_ STOP	DBG_ WWDG _STOP	DBG_ RTC_ STOP	Res.	Res.	Res.	Res.	Res.	Res.	Res.	Res.	Res.	DBG_ TIM2_ STOP
			rw	rw	rw										rw

Bit 31 **DBG_LPTIM1_STOP**: LPTIM1 stop in CPU1 debug

0: Normal operation. LPTIM1 continues to operate while CPU1 is in debug mode
1: Stop in debug. LPTIM1 is frozen while CPU1 is in debug mode.

Bits 30:22 Reserved, must be kept at reset value.

Bit 21 **DBG_I2C1_STOP**: I2C1 SMBUS timeout stop in CPU1 debug

0: Normal operation. I2C1 SMBUS timeout continues to operate while CPU1 is in debug mode
1: Stop in debug. I2C1 SMBUS timeout is frozen while CPU1 is in debug mode.

Bits 20:13 Reserved, must be kept at reset value.

Bit 12 **DBG_IWDG_STOP**: IWDG stop in CPU1 debug

0: Normal operation. IWDG continues to operate while CPU1 is in debug mode
1: Stop in debug. IWDG is frozen while CPU1 is in debug mode.

Bit 11 **DBG_WWDG_STOP**: WWDG stop in CPU1 debug

0: Normal operation. WWDG continues to operate while CPU1 is in debug mode
1: Stop in debug. WWDG is frozen while CPU1 is in debug mode.

Bit 10 **DBG_RTC_STOP**: RTC stop in CPU1 debug

0: Normal operation. RTC continues to operate while CPU1 is in debug mode
1: Stop in debug. RTC is frozen while CPU1 is in debug mode.

Bits 9:1 Reserved, must be kept at reset value.

Bit 0 **DBG_TIM2_STOP**: TIM2 stop in CPU1 debug

0: Normal operation. TIM2 continues to operate while CPU1 is in debug mode
1: Stop in debug. TIM2 is frozen while CPU1 is in debug mode.

33.8.4 DBGMCU CPU2 APB1 peripheral freeze register 1 (DBGMCU_C2APB1FZR1)

CPU2 peripheral freeze is only available when CPU2 debug is enabled or when CPU2 CTI is configured by the debugger for halt via EDBGRQ.

Address offset: 0x040

Reset value: 0x0000 0000

31	30	29	28	27	26	25	24	23	22	21	20	19	18	17	16
DBG_ LPTIM1_ STOP	Res.	Res.	Res.	Res.	Res.	Res.	Res.	Res.	Res.	DBG_ I2C1_ STOP	Res.	Res.	Res.	Res.	Res.
rw										rw					

15	14	13	12	11	10	9	8	7	6	5	4	3	2	1	0
Res.	Res.	Res.	DBG_ IWDG_ STOP	Res.	DBG _RTC_ STOP	Res.	Res.	Res.	Res.	Res.	Res.	Res.	Res.	Res.	DBG_ TIM2_ STOP
			rw		rw										rw

Bit 31 **DBG_LPTIM1_STOP**: LPTIM1 stop in CPU2 debug
0: Normal operation. LPTIM1 continues to operate while CPU2 is in debug mode
1: Stop in debug. LPTIM1 is frozen while CPU2 is in debug mode.

Bits 30:22 Reserved, must be kept at reset value.

Bit 21 **DBG_I2C1_STOP**: I2C1 SMBUS timeout stop in CPU2 debug
0: Normal operation. I2C1 SMBUS timeout continues to operate while CPU2 is in debug mode
1: Stop in debug. I2C1 SMBUS timeout is frozen while CPU2 is in debug mode.

Bits 20:13 Reserved, must be kept at reset value.

Bit 12 **DBG_IWDG_STOP**: IWDG stop in CPU2 debug
0: Normal operation. IWDG continues to operate while CPU2 is in debug mode
1: Stop in debug. IWDG is frozen while CPU2 is in debug mode.

Bit 11 Reserved, must be kept at reset value.

Bit 10 **DBG_RTC_STOP**: RTC stop in CPU2 debug
0: Normal operation. RTC continues to operate while CPU2 is in debug mode
1: Stop in debug. RTC is frozen while CPU2 is in debug mode.

Bits 9:1 Reserved, must be kept at reset value.

Bit 0 **DBG_TIM2_STOP**: TIM2 stop in CPU2 debug
0: Normal operation. TIM2 continues to operate while CPU2 is in debug mode
1: Stop in debug. TIM2 is frozen while CPU2 is in debug mode.

33.8.5 DBGMCU CPU1 APB1 peripheral freeze register 2 (DBGMCU_APB1FZR2)

Address offset: 0x044

Reset value: 0x0000 0000

31	30	29	28	27	26	25	24	23	22	21	20	19	18	17	16
Res.	Res.	Res.	Res.	Res.	Res.	Res.	Res.	Res.	Res.	Res.	Res.	Res.	Res.	Res.	Res.

15	14	13	12	11	10	9	8	7	6	5	4	3	2	1	0
Res.	Res.	Res.	Res.	Res.	Res.	Res.	Res.	Res.	Res.	DBG_ LPTIM2_ STOP	Res.	Res.	Res.	Res.	Res.
										rw					

Bits 31:9 Reserved, must be kept at reset value.

Bit 5 **DBG_LPTIM2_STOP**: LPTIM2 stop in CPU1 debug

0: Normal operation. LPTIM2 continues to operate while CPU1 is in debug mode

1: Stop in debug. LPTIM2 is frozen while CPU1 is in debug mode.

Bits 7:0 Reserved, must be kept at reset value.

33.8.6 DBGMCU CPU2 APB1 peripheral freeze register 2 (DBGMCU_C2APB1FZR2)

CPU2 peripheral freeze is only available when CPU2 debug is enabled or when CPU2 CTI is configured by the debugger for halt via EDBGRQ.

Address offset: 0x048

Reset value: 0x0000 0000

31	30	29	28	27	26	25	24	23	22	21	20	19	18	17	16
Res.	Res.	Res.	Res.	Res.	Res.	Res.	Res.	Res.	Res.	Res.	Res.	Res.	Res.	Res.	Res.

15	14	13	12	11	10	9	8	7	6	5	4	3	2	1	0
Res.	Res.	Res.	Res.	Res.	Res.	Res.	Res.	Res.	Res.	DBG_ LPTIM2_ STOP	Res.	Res.	Res.	Res.	Res.
										rw					

Bits 31:9 Reserved, must be kept at reset value.

Bit 5 **DBG_LPTIM2_STOP**: LPTIM2 stop in CPU2 debug

0: Normal operation. LPTIM2 continues to operate while CPU2 is in debug mode

1: Stop in debug. LPTIM2 is frozen while CPU2 is in debug mode.

Bits 7:0 Reserved, must be kept at reset value.

33.8.7 DBGMCU CPU1 APB2 peripheral freeze register (DBGMCU_APB2FZR)

Address offset: 0x04C

Reset value: 0x0000 0000

31	30	29	28	27	26	25	24	23	22	21	20	19	18	17	16
Res.	Res.	Res.	Res.	Res.	Res.	Res.	Res.	Res.	Res.	Res.	Res.	Res.	Res.	Res.	Res.

15	14	13	12	11	10	9	8	7	6	5	4	3	2	1	0
Res.	Res.	Res.	Res.	DBG_ TIM1_ STOP	Res.	Res.	Res.	Res.	Res.	Res.	Res.	Res.	Res.	Res.	Res.
				rw											

Bits 31:12 Reserved, must be kept at reset value.

Bit 11 **DBG_TIM1_STOP**: TIM1 stop in CPU1 debug

0: Normal operation. TIM1 continues to operate while CPU1 is in debug mode

1: Stop in debug. TIM1 is frozen while CPU1 is in debug mode.

Bits 10:0 Reserved, must be kept at reset value.

33.8.8 DBGMCU CPU2 APB2 peripheral freeze register (DBGMCU_C2APB2FZR)

CPU2 peripheral freeze is only available when CPU2 debug is enabled or when CPU2 CTI is configured by the debugger for halt via EDBGRQ.

Address offset: 0x050

Reset value: 0x0000 0000

31	30	29	28	27	26	25	24	23	22	21	20	19	18	17	16
Res.	Res.	Res.	Res.	Res.	Res.	Res.	Res.	Res.	Res.	Res.	Res.	Res.	Res.	Res.	Res.

15	14	13	12	11	10	9	8	7	6	5	4	3	2	1	0
Res.	Res.	Res.	Res.	DBG_ TIM1_ STOP	Res.	Res.	Res.	Res.	Res.	Res.	Res.	Res.	Res.	Res.	Res.
				rw											

Bits 31:12 Reserved, must be kept at reset value.

Bit 11 **DBG_TIM1_STOP**: TIM1 stop in CPU2 debug

0: Normal operation. TIM1 continues to operate while CPU2 is in debug mode

1: Stop in debug. TIM1 is frozen while CPU2 is in debug mode.

Bits 10:0 Reserved, must be kept at reset value.

33.8.9 DBGMCU register map and reset values

Table 218. DBGMCU register map and reset values

Offset	Register name	31	30	29	28	27	26	25	24	23	22	21	20	19	18	17	16	15	14	13	12	11	10	9	8	7	6	5	4	3	2	1	0
0x000	DBGMCU_IDCODE	REV_ID[15:0]																Res.	Res.	Res.	Res.	DEV_ID[11:0]											
	Reset value	0	1	0	0	0	0	0	0	0	0	0	0	0	0	0	0	0	1	1	0	0	1	0	0	1	0	0	1	0	1	0	1
0x004	DBGMCU_CR	Res.	Res.	Res.	TRGOEN	Res.	Res.	Res.	Res.	Res.	Res.	Res.	Res.	Res.	Res.	Res.	Res.	Res.	Res.	Res.	Res.	Res.	Res.	Res.	Res.	Res.	Res.	TRACE_IOEN	Res.	Res.	DBG_STANDBY	DBG_STOP	DBG_SLEEP
	Reset value				0																							0			0	0	0
0x008-0x038	Reserved	Res.	Res.	Res.	Res.	Res.	Res.	Res.	Res.	Res.	Res.	Res.	Res.	Res.	Res.	Res.	Res.	Res.	Res.	Res.	Res.	Res.	Res.	Res.	Res.	Res.	Res.	Res.	Res.	Res.	Res.	Res.	Res.
0x03C	DBGMCU_ APB1FZR1	DBG_LPTIM1_STOP	Res.	Res.	Res.	Res.	Res.	Res.	Res.	Res.	Res.	DBG_I2C1_STOP	Res.	Res.	Res.	Res.	Res.	Res.	Res.	Res.	DBG_IWDG_STOP	DBG_WWDG_STOP	DBG_RTC_STOP	Res.	Res.	Res.	Res.	Res.	Res.	Res.	Res.	Res.	DBG_TIM2_STOP
	Reset value	0										0									0	0	0										0
0x040	DBGMCU_ C2APB1FZR1	DBG_LPTIM1_STOP	Res.	Res.	Res.	Res.	Res.	Res.	Res.	Res.	Res.	DBG_I2C1_STOP	Res.	Res.	Res.	Res.	Res.	Res.	Res.	Res.	DBG_IWDG_STOP	Res.	DBG_RTC_STOP	Res.	Res.	Res.	Res.	Res.	Res.	Res.	Res.	Res.	DBG_TIM2_STOP
	Reset value	0										0									0		0										0
0x044	DBGMCU_ APB1FZR2	Res.	Res.	Res.	Res.	Res.	Res.	Res.	Res.	Res.	Res.	Res.	Res.	Res.	Res.	Res.	Res.	Res.	Res.	Res.	Res.	Res.	Res.	Res.	Res.	Res.	Res.	DBG_LPTIM2_STOP	Res.	Res.	Res.	Res.	Res.
	Reset value																											0					
0x048	DBGMCU_ C2APB1FZR2	Res.	Res.	Res.	Res.	Res.	Res.	Res.	Res.	Res.	Res.	Res.	Res.	Res.	Res.	Res.	Res.	Res.	Res.	Res.	Res.	Res.	Res.	Res.	Res.	Res.	Res.	DBG_LPTIM2_STOP	Res.	Res.	Res.	Res.	Res.
	Reset value																											0					
0x04C	DBGMCU_ APB2FZR	Res.	Res.	Res.	Res.	Res.	Res.	Res.	Res.	Res.	Res.	Res.	Res.	Res.	Res.	Res.	Res.	Res.	Res.	Res.	Res.	DBG_TIM1_STOP	Res.	Res.	Res.	Res.	Res.	Res.	Res.	Res.	Res.	Res.	Res.
	Reset value																					0											

Table 218. DBGMCU register map and reset values (continued)

Offset	Register name	31	30	29	28	27	26	25	24	23	22	21	20	19	18	17	16	15	14	13	12	11	10	9	8	7	6	5	4	3	2	1	0
0x050	DBGMCU_ C2APB2FZR	Res.	Res.	Res.	Res.	Res.	Res.	Res.	Res.	Res.	Res.	Res.	Res.	Res.	Res.	Res.	Res.	Res.	Res.	Res.	Res.	DBG_TIM1_STOP	Res.	Res.	Res.	Res.	Res.	Res.	Res.	Res.	Res.	Res.	Res.
	Reset value																					0											

Refer to *Section 33.8: Microcontroller debug unit (DBGMCU)* for the register boundary addresses.

33.9 CPU2 ROM tables

The ROM tables are CoreSight™ components that contain the base addresses of all the Coresight™ debug components accessible via the AHBD. These tables allow a debugger to discover the topology of the CoreSight™ system automatically.

There are two ROM tables in the CPU2 sub-system:

1. ROM1: CPU2 processor ROM table, pointed to by the BASE register in the CPU2 AHB-AP. It contains the base address pointers for the CTI, as well as for the CPU2 ROM table.
2. ROM2: CPU2 ROM table, containing pointers to the CPU2 System control space registers, which allow the debugger to identify the CPU core, as well as to the remaining CoreSight™ components in the CPU2 subsystem (PBU, DWT).

The CPU2 processor ROM table occupies a 4-Kbyte, 32-bit wide chunk of AHB address space, from 0xF0000000 to 0xF0000FFC.

Table 219. CPU2 processor ROM table

Address in ROM table	Component name	Component base address	Component address offset	Size	Entry
0xF0000000	CPU2 ROM table	0xE00FF000	0xF00FF000	4 KB	0xF00FF003
0xF0000004	CTI	0xF0001000	0x00001000	4 KB	0x00001003
0xF0000008	Not used	-	-	-	0x00002002
0xF000000C	Not used	-	-	-	0x10000002
0xF0000010	Top of table	-	-	-	0x00000000
0xF000000C to 0xF0000FC8	Reserved	-	-	-	0x00000000
0xF0000FCC to 0xF0000FFC	ROM table registers	-	-	-	See *Table 221*

The CPU2 ROM table occupies a 4 KB, 32-bit wide chunk of APB-D address space, from 0xE00FF000 to 0xE00FFFFC.

Table 220. CPU2 ROM table

Address in ROM table	Component name	Component base address	Component address offset	Size	Entry
0xE00FF000	SCS	0xE000E000	0xFFF0F000	4 KB	0xFFF0F003
0xE00FF004	DWT	0xE0001000	0xFFF02000	4 KB	0xFFF02003
0xE00FF008	BPU	0xE0002000	0xFFF03000	4 KB	0xFFF03003
0xE00FF00C	Top of table	-	-	-	0x00000000
0xE00FF010 to 0xE00FFFC8	Reserved	-	-	-	0x00000000
0xE00FFFCC to 0xE00FFFFC	ROM table registers	-	-	-	See *Table 222*

The topology for the CoreSight™ components in the CPU2 subsystem is shown in *Figure 319*.

Figure 319. CPU2 CoreSight™ topology

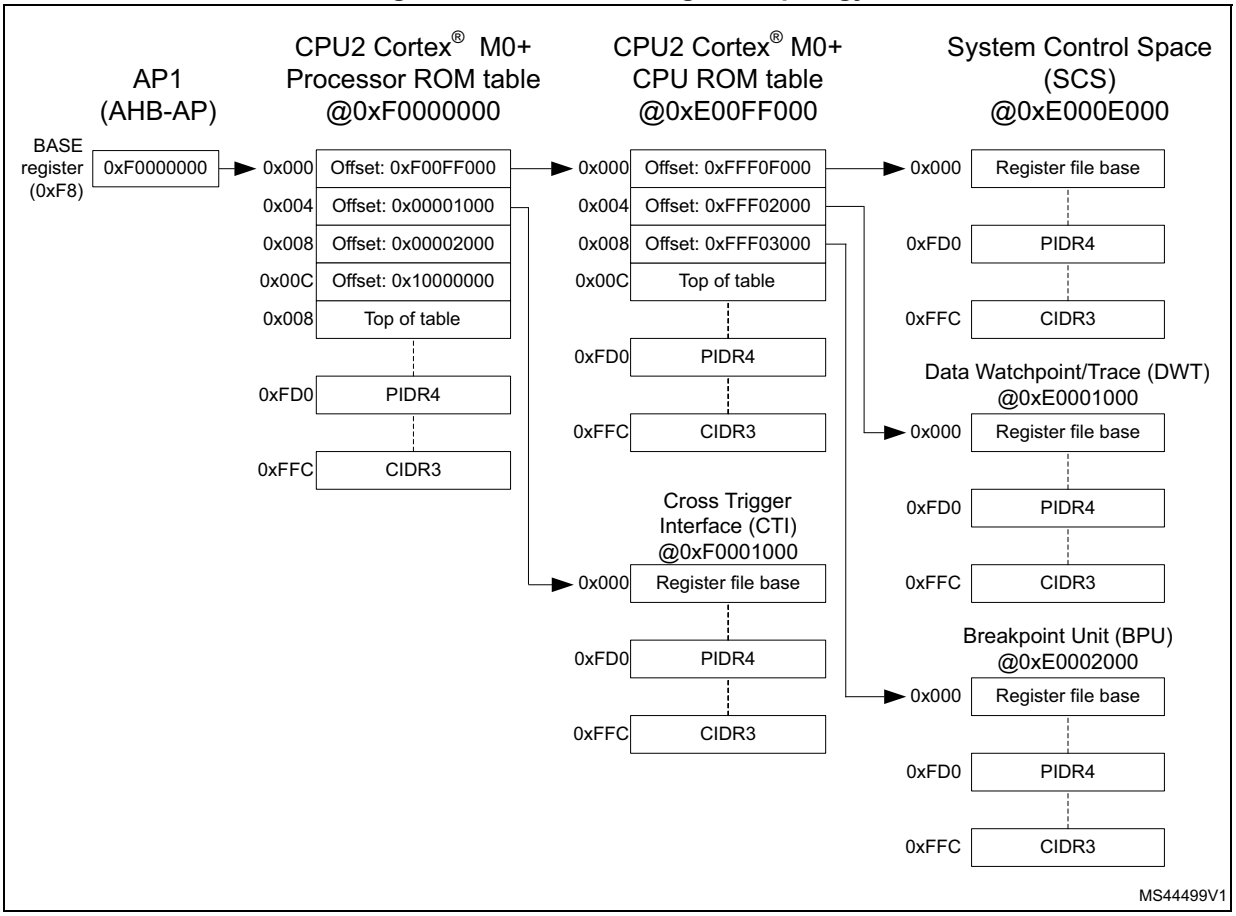

33.9.1 CPU2 ROM1 memory type register (C2ROM1_MEMTYPER)

Address offset: 0xFCC

Reset value: 0x0000 0001

31	30	29	28	27	26	25	24	23	22	21	20	19	18	17	16
Res.	Res.	Res.	Res.	Res.	Res.	Res.	Res.	Res.	Res.	Res.	Res.	Res.	Res.	Res.	Res.

15	14	13	12	11	10	9	8	7	6	5	4	3	2	1	0
Res.	Res.	Res.	Res.	Res.	Res.	Res.	Res.	Res.	Res.	Res.	Res.	Res.	Res.	Res.	SYSMEM
															rw

Bits 31:1 Reserved, must be kept at reset value.

Bit 0 **SYSMEM**: System memory
0x1: System memory is present on this bus

33.9.2 CPU2 ROM1 CoreSight peripheral identity register 4 (C2ROM1_PIDR4)

Address offset: 0xFD0

Reset value: 0x0000 0004

31	30	29	28	27	26	25	24	23	22	21	20	19	18	17	16
Res.	Res.	Res.	Res.	Res.	Res.	Res.	Res.	Res.	Res.	Res.	Res.	Res.	Res.	Res.	Res.

15	14	13	12	11	10	9	8	7	6	5	4	3	2	1	0
Res.	Res.	Res.	Res.	Res.	Res.	Res.	Res.	4KCOUNT[3:0]				JEP106CON[3:0]			
								r	r	r	r	r	r	r	r

Bits 31:8 Reserved, must be kept at reset value.

Bits 7:4 **4KCOUNT[3:0]**: register file size
0x0: Register file occupies a single 4 KB region

Bits 3:0 **JEP106CON[3:0]**: JEP106 continuation code
0x4: Arm® JEDEC continuation code

33.9.3 CPU2 ROM1 CoreSight peripheral identity register 0 (C2ROM1_PIDR0)

Address offset: 0xFE0

Reset value: 0x0000 0C0

31	30	29	28	27	26	25	24	23	22	21	20	19	18	17	16
Res.	Res.	Res.	Res.	Res.	Res.	Res.	Res.	Res.	Res.	Res.	Res.	Res.	Res.	Res.	Res.

15	14	13	12	11	10	9	8	7	6	5	4	3	2	1	0
Res.	Res.	Res.	Res.	Res.	Res.	Res.	Res.	PARTNUM[7:0]							
								r	r	r	r	r	r	r	r

Bits 31:8 Reserved, must be kept at reset value.

Bits 7:0 **PARTNUM[7:0]**: Part number bits [7:0]
0xC0: Cortex®-M0+ processor ROM table

33.9.4 CPU2 ROM1 CoreSight peripheral identity register 1 (C2ROM1_PIDR1)

Address offset: 0xFE4

Reset value: 0x0000 00B4

31	30	29	28	27	26	25	24	23	22	21	20	19	18	17	16
Res.	Res.	Res.	Res.	Res.	Res.	Res.	Res.	Res.	Res.	Res.	Res.	Res.	Res.	Res.	Res.

15	14	13	12	11	10	9	8	7	6	5	4	3	2	1	0
Res.	Res.	Res.	Res.	Res.	Res.	Res.	Res.	JEP106ID[3:0]				PARTNUM[11:8]			
								r	r	r	r	r	r	r	r

Bit 31:8 Reserved, must be kept at reset value.

Bits 7:4 **JEP106ID[3:0]**: JEP106 identity code bits [3:0]
0xB: Arm® JEDEC code

Bits 3:0 **PARTNUM[11:8]**: Part number bits [11:8]
0x4: Cortex®-M0+processor ROM table

33.9.5 CPU2 ROM1 CoreSight peripheral identity register 2 (C2ROM1_PIDR2)

Address offset: 0xFE8

Reset value: 0x0000 000B

31	30	29	28	27	26	25	24	23	22	21	20	19	18	17	16
Res.	Res.	Res.	Res.	Res.	Res.	Res.	Res.	Res.	Res.	Res.	Res.	Res.	Res.	Res.	Res.

15	14	13	12	11	10	9	8	7	6	5	4	3	2	1	0
Res.	Res.	Res.	Res.	Res.	Res.	Res.	Res.	REVISION[3:0]				JEDEC	JEP106ID[6:4]		
								r	r	r	r	r	r	r	r

Bit 31:8 Reserved, must be kept at reset value.

Bit s 7:4 **REVISION[3:0]**: Component revision number
0x0: rev r0p0

Bit 3 **JEDEC**: JEDEC assigned value
0x1: Designer ID specified by JEDEC

Bits 2:0 **JEP106ID[6:4]**: JEP106 identity code bits [6:4]
0x3: Arm® JEDEC code

33.9.6 CPU2 ROM1 CoreSight peripheral identity register 3 (C2ROM1_PIDR3)

Address offset: 0xFEC

Reset value: 0x0000 0000

31	30	29	28	27	26	25	24	23	22	21	20	19	18	17	16
Res.	Res.	Res.	Res.	Res.	Res.	Res.	Res.	Res.	Res.	Res.	Res.	Res.	Res.	Res.	Res.

15	14	13	12	11	10	9	8	7	6	5	4	3	2	1	0
Res.	Res.	Res.	Res.	Res.	Res.	Res.	Res.	REVAND[3:0]				CMOD[3:0]			
								r	r	r	r	r	r	r	r

Bit 31:8 Reserved, must be kept at reset value.

Bits 7:4 **REVAND[3:0]**: metal fix version
0x0: No metal fix

Bits 3:0 **CMOD[3:0]**: Customer modified
0x0: No customer modifications

33.9.7 CPU2 ROM1 CoreSight component identity register 0 (C2ROM1_CIDR0)

Address offset: 0xFF0

Reset value: 0x0000 000D

31	30	29	28	27	26	25	24	23	22	21	20	19	18	17	16
Res.	Res.	Res.	Res.	Res.	Res.	Res.	Res.	Res.	Res.	Res.	Res.	Res.	Res.	Res.	Res.

15	14	13	12	11	10	9	8	7	6	5	4	3	2	1	0
Res.	Res.	Res.	Res.	Res.	Res.	Res.	Res.	PREAMBLE[7:0]							
								r	r	r	r	r	r	r	r

Bits 31:8 Reserved, must be kept at reset value.

Bits 7:0 **PREAMBLE[7:0]**: Component ID bits [7:0]
0x0D: Common ID value

33.9.8 CPU2 ROM1 CoreSight peripheral identity register 1 (C2ROM1_CIDR1)

Address offset: 0xFF4

Reset value: 0x0000 0010

31	30	29	28	27	26	25	24	23	22	21	20	19	18	17	16
Res.	Res.	Res.	Res.	Res.	Res.	Res.	Res.	Res.	Res.	Res.	Res.	Res.	Res.	Res.	Res.

15	14	13	12	11	10	9	8	7	6	5	4	3	2	1	0
Res.	Res.	Res.	Res.	Res.	Res.	Res.	Res.	CLASS[3:0]				PREAMBLE[11:8]			
								r	r	r	r	r	r	r	r

Bit 31:8 Reserved, must be kept at reset value.

Bits 7:4 **CLASS[3:0]**: Component ID bits [15:12] - component class
0x1: ROM table component

Bits 3:0 **PREAMBLE[11:8]**: Component ID bits [11:8]
0x0: Common ID value

33.9.9 CPU2 ROM1 CoreSight component identity register 2 (C2ROM1_CIDR2)

Address offset: 0xFF8

Reset value: 0x0000 0005

31	30	29	28	27	26	25	24	23	22	21	20	19	18	17	16
Res.	Res.	Res.	Res.	Res.	Res.	Res.	Res.	Res.	Res.	Res.	Res.	Res.	Res.	Res.	Res.

15	14	13	12	11	10	9	8	7	6	5	4	3	2	1	0
Res.	Res.	Res.	Res.	Res.	Res.	Res.	Res.	PREAMBLE[19:12]							
								r	r	r	r	r	r	r	r

Bits 31:8 Reserved, must be kept at reset value.

Bits 7:0 **PREAMBLE[19:12]**: Component ID bits [23:16]
0x05: Common ID value

33.9.10 CPU2 ROM1 CoreSight component identity register 3 (C2ROM1_CIDR3)

Address offset: 0xFFC

Reset value: 0x0000 00B1

31	30	29	28	27	26	25	24	23	22	21	20	19	18	17	16
Res.	Res.	Res.	Res.	Res.	Res.	Res.	Res.	Res.	Res.	Res.	Res.	Res.	Res.	Res.	Res.

15	14	13	12	11	10	9	8	7	6	5	4	3	2	1	0
Res.	Res.	Res.	Res.	Res.	Res.	Res.	Res.	PREAMBLE[27:20]							
								r	r	r	r	r	r	r	r

Bits 31:8 Reserved, must be kept at reset value.

Bits 7:0 **PREAMBLE[27:20]**: Component ID bits [31:24]
0xB1: Common ID value

33.9.11 CPU2 processor ROM table registers and reset values

Table 221. CPU2 processor ROM table register map and reset values

Offset	Register name	31	30	29	28	27	26	25	24	23	22	21	20	19	18	17	16	15	14	13	12	11	10	9	8	7	6	5	4	3	2	1	0
0xFCC	C2ROM1_ MEMTYPER	Res.	Res.	Res.	Res.	Res.	Res.	Res.	Res.	Res.	Res.	Res.	Res.	Res.	Res.	Res.	Res.	Res.	Res.	Res.	Res.	Res.	Res.	Res.	Res.	Res.	Res.	Res.	Res.	Res.	Res.	Res.	SYSMEM
	Reset value																																1
0xFD0	C2ROM1_PIDR4	Res.	Res.	Res.	Res.	Res.	Res.	Res.	Res.	Res.	Res.	Res.	Res.	Res.	Res.	Res.	Res.	Res.	Res.	Res.	Res.	Res.	Res.	Res.	Res.	4KCOUNT [3:0]				JEP106CON [3:0]			
	Reset value																									0	0	0	0	0	1	0	0
0xFE0	C2ROM1_PIDR0	Res.	Res.	Res.	Res.	Res.	Res.	Res.	Res.	Res.	Res.	Res.	Res.	Res.	Res.	Res.	Res.	Res.	Res.	Res.	Res.	Res.	Res.	Res.	Res.	PARTNUM[7:0]							
	Reset value																									1	1	0	0	0	0	0	0
0xFE4	C2ROM1_PIDR1	Res.	Res.	Res.	Res.	Res.	Res.	Res.	Res.	Res.	Res.	Res.	Res.	Res.	Res.	Res.	Res.	Res.	Res.	Res.	Res.	Res.	Res.	Res.	Res.	JEP106ID [3:0]				PARTNUM [11:8]			
	Reset value																									1	0	1	1	0	1	0	0
0xFE8	C2ROM1_PIDR2	Res.	Res.	Res.	Res.	Res.	Res.	Res.	Res.	Res.	Res.	Res.	Res.	Res.	Res.	Res.	Res.	Res.	Res.	Res.	Res.	Res.	Res.	Res.	Res.	REVISION [3:0]				JEDEC	JEP106ID [6:4]		
	Reset value																									0	0	0	0	1	0	1	1
0xFEC	C2ROM1_PIDR3	Res.	Res.	Res.	Res.	Res.	Res.	Res.	Res.	Res.	Res.	Res.	Res.	Res.	Res.	Res.	Res.	Res.	Res.	Res.	Res.	Res.	Res.	Res.	Res.	REVAND[3:0]				CMOD[3:0]			
	Reset value																									0	0	0	0	0	0	0	0
0xFF0	C2ROM1_CIDR0	Res.	Res.	Res.	Res.	Res.	Res.	Res.	Res.	Res.	Res.	Res.	Res.	Res.	Res.	Res.	Res.	Res.	Res.	Res.	Res.	Res.	Res.	Res.	Res.	PREAMBLE[7:0]							
	Reset value																									0	0	0	0	1	1	0	1
0xFF4	C2ROM1_CIDR1	Res.	Res.	Res.	Res.	Res.	Res.	Res.	Res.	Res.	Res.	Res.	Res.	Res.	Res.	Res.	Res.	Res.	Res.	Res.	Res.	Res.	Res.	Res.	Res.	CLASS[3:0]				PREAMBLE [11:8]			
	Reset value																									0	0	0	1	0	0	0	0
0xFF8	C2ROM1_CIDR2	Res.	Res.	Res.	Res.	Res.	Res.	Res.	Res.	Res.	Res.	Res.	Res.	Res.	Res.	Res.	Res.	Res.	Res.	Res.	Res.	Res.	Res.	Res.	Res.	PREAMBLE[19:12]							
	Reset value																									0	0	0	0	0	1	0	1
0xFFC	C2ROM1_CIDR3	Res.	Res.	Res.	Res.	Res.	Res.	Res.	Res.	Res.	Res.	Res.	Res.	Res.	Res.	Res.	Res.	Res.	Res.	Res.	Res.	Res.	Res.	Res.	Res.	PREAMBLE[27:20]							
	Reset value																									1	0	1	1	0	0	0	1

Refer to *Section 33.9: CPU2 ROM tables* for the register boundary addresses.

33.9.12 CPU2 ROM2 memory type register (C2ROM2_MEMTYPER)

Address offset: 0xFCC

Reset value: 0x0000 0001

31	30	29	28	27	26	25	24	23	22	21	20	19	18	17	16
Res.	Res.	Res.	Res.	Res.	Res.	Res.	Res.	Res.	Res.	Res.	Res.	Res.	Res.	Res.	Res.

15	14	13	12	11	10	9	8	7	6	5	4	3	2	1	0
Res.	Res.	Res.	Res.	Res.	Res.	Res.	Res.	Res.	Res.	Res.	Res.	Res.	Res.	Res.	SYSMEM
															rw

Bits 31:1 Reserved, must be kept at reset value.

Bit 0 **SYSMEM**: System memory
0x1: System memory is present on this bus

33.9.13 CPU2 ROM2 CoreSight peripheral identity register 4 (C2ROM2_PIDR4)

Address offset: 0xFD0

Reset value: 0x0000 0004

31	30	29	28	27	26	25	24	23	22	21	20	19	18	17	16
Res.	Res.	Res.	Res.	Res.	Res.	Res.	Res.	Res.	Res.	Res.	Res.	Res.	Res.	Res.	Res.

15	14	13	12	11	10	9	8	7	6	5	4	3	2	1	0
Res.	Res.	Res.	Res.	Res.	Res.	Res.	Res.	4KCOUNT[3:0]				JEP106CON[3:0]			
								r	r	r	r	r	r	r	r

Bits 31:8 Reserved, must be kept at reset value.

Bits 7:4 **4KCOUNT[3:0]**: register file size
0x0: Register file occupies a single 4 KB region

Bits 3:0 **JEP106CON[3:0]**: JEP106 continuation code
0x4: Arm® JEDEC continuation code

33.9.14 CPU2 ROM2 CoreSight peripheral identity register 0 (C2ROM2_PIDR0)

Address offset: 0xFE0

Reset value: 0x0000 0C0

31	30	29	28	27	26	25	24	23	22	21	20	19	18	17	16
Res.	Res.	Res.	Res.	Res.	Res.	Res.	Res.	Res.	Res.	Res.	Res.	Res.	Res.	Res.	Res.

15	14	13	12	11	10	9	8	7	6	5	4	3	2	1	0
Res.	Res.	Res.	Res.	Res.	Res.	Res.	Res.	PARTNUM[7:0]							
								r	r	r	r	r	r	r	r

Bits 31:8 Reserved, must be kept at reset value.

Bits 7:0 **PARTNUM[7:0]**: Part number bits [7:0]
0xC0: CPU2 ROM table

33.9.15 CPU2 ROM2 CoreSight peripheral identity register 1 (C2ROM2_PIDR1)

Address offset: 0xFE4

Reset value: 0x0000 00B4

31	30	29	28	27	26	25	24	23	22	21	20	19	18	17	16
Res.	Res.	Res.	Res.	Res.	Res.	Res.	Res.	Res.	Res.	Res.	Res.	Res.	Res.	Res.	Res.

15	14	13	12	11	10	9	8	7	6	5	4	3	2	1	0
Res.	Res.	Res.	Res.	Res.	Res.	Res.	Res.	JEP106ID[3:0]				PARTNUM[11:8]			
								r	r	r	r	r	r	r	r

Bit 31:8 Reserved, must be kept at reset value.

Bits 7:4 **JEP106ID[3:0]**: JEP106 identity code bits [3:0]
0xB: Arm® JEDEC code

Bits 3:0 **PARTNUM[11:8]**: Part number bits [11:8]
0x4: CPU2 ROM table

33.9.16 CPU2 ROM2 CoreSight peripheral identity register 2 (C2ROM2_PIDR2)

Address offset: 0xFE8

Reset value: 0x0000 000B

31	30	29	28	27	26	25	24	23	22	21	20	19	18	17	16
Res.	Res.	Res.	Res.	Res.	Res.	Res.	Res.	Res.	Res.	Res.	Res.	Res.	Res.	Res.	Res.

15	14	13	12	11	10	9	8	7	6	5	4	3	2	1	0
Res.	Res.	Res.	Res.	Res.	Res.	Res.	Res.	REVISION[3:0]				JEDEC	JEP106ID[6:4]		
								r	r	r	r	r	r	r	r

Bit 31:8 Reserved, must be kept at reset value.

Bit s 7:4 **REVISION[3:0]**: Component revision number
0x0: rev r0p0

Bit 3 **JEDEC**: JEDEC assigned value
0x1: Designer ID specified by JEDEC

Bits 2:0 **JEP106ID[6:4]**: JEP106 identity code bits [6:4]
0x3: Arm® JEDEC code

33.9.17 CPU2 ROM2 CoreSight peripheral identity register 3 (C2ROM2_PIDR3)

Address offset: 0xFEC

Reset value: 0x0000 0000

31	30	29	28	27	26	25	24	23	22	21	20	19	18	17	16
Res.	Res.	Res.	Res.	Res.	Res.	Res.	Res.	Res.	Res.	Res.	Res.	Res.	Res.	Res.	Res.

15	14	13	12	11	10	9	8	7	6	5	4	3	2	1	0
Res.	Res.	Res.	Res.	Res.	Res.	Res.	Res.	REVAND[3:0]				CMOD[3:0]			
								r	r	r	r	r	r	r	r

Bit 31:8 Reserved, must be kept at reset value.

Bits 7:4 **REVAND[3:0]**: metal fix version
0x0: No metal fix

Bits 3:0 **CMOD[3:0]**: Customer modified
0x0: No customer modifications

33.9.18 CPU2 ROM2 CoreSight component identity register 0 (C2ROM2_CIDR0)

Address offset: 0xFF0

Reset value: 0x0000 000D

31	30	29	28	27	26	25	24	23	22	21	20	19	18	17	16
Res.	Res.	Res.	Res.	Res.	Res.	Res.	Res.	Res.	Res.	Res.	Res.	Res.	Res.	Res.	Res.

15	14	13	12	11	10	9	8	7	6	5	4	3	2	1	0
Res.	Res.	Res.	Res.	Res.	Res.	Res.	Res.	PREAMBLE[7:0]							
								r	r	r	r	r	r	r	r

Bits 31:8 Reserved, must be kept at reset value.

Bits 7:0 **PREAMBLE[7:0]**: Component ID bits [7:0]
0x0D: Common ID value

33.9.19 CPU2 ROM2 CoreSight peripheral identity register 1 (C2ROM2_CIDR1)

Address offset: 0xFF4

Reset value: 0x0000 0010

31	30	29	28	27	26	25	24	23	22	21	20	19	18	17	16
Res.	Res.	Res.	Res.	Res.	Res.	Res.	Res.	Res.	Res.	Res.	Res.	Res.	Res.	Res.	Res.

15	14	13	12	11	10	9	8	7	6	5	4	3	2	1	0
Res.	Res.	Res.	Res.	Res.	Res.	Res.	Res.	CLASS[3:0]				PREAMBLE[11:8]			
								r	r	r	r	r	r	r	r

Bit 31:8 Reserved, must be kept at reset value.

Bits 7:4 **CLASS[3:0]**: Component ID bits [15:12] - component class
0x1: ROM table component

Bits 3:0 **PREAMBLE[11:8]**: Component ID bits [11:8]
0x0: Common ID value

33.9.20 CPU2 ROM2 CoreSight component identity register 2 (C2ROM2_CIDR2)

Address offset: 0xFF8

Reset value: 0x0000 0005

31	30	29	28	27	26	25	24	23	22	21	20	19	18	17	16
Res.	Res.	Res.	Res.	Res.	Res.	Res.	Res.	Res.	Res.	Res.	Res.	Res.	Res.	Res.	Res.

15	14	13	12	11	10	9	8	7	6	5	4	3	2	1	0
Res.	Res.	Res.	Res.	Res.	Res.	Res.	Res.	PREAMBLE[19:12]							
								r	r	r	r	r	r	r	r

Bits 31:8 Reserved, must be kept at reset value.

Bits 7:0 **PREAMBLE[19:12]**: Component ID bits [23:16]
0x05: Common ID value

33.9.21 CPU2 ROM2 CoreSight component identity register 3 (C2ROM2_CIDR3)

Address offset: 0xFFC

Reset value: 0x0000 00B1

31	30	29	28	27	26	25	24	23	22	21	20	19	18	17	16
Res.	Res.	Res.	Res.	Res.	Res.	Res.	Res.	Res.	Res.	Res.	Res.	Res.	Res.	Res.	Res.

15	14	13	12	11	10	9	8	7	6	5	4	3	2	1	0
Res.	Res.	Res.	Res.	Res.	Res.	Res.	Res.	PREAMBLE[27:20]							
								3r	r	r	r	r	r	r	r

Bits 31:8 Reserved, must be kept at reset value.

Bits 7:0 **PREAMBLE[27:20]**: Component ID bits [31:24]
0xB1: Common ID value

33.9.22 CPU2 ROM table register map and reset values

Table 222. CPU2 ROM table register map and reset values

Offset	Register name	31	30	29	28	27	26	25	24	23	22	21	20	19	18	17	16	15	14	13	12	11	10	9	8	7	6	5	4	3	2	1	0
0xFCC	C2ROM2_ MEMTYPER	Res.	Res.	Res.	Res.	Res.	Res.	Res.	Res.	Res.	Res.	Res.	Res.	Res.	Res.	Res.	Res.	Res.	Res.	Res.	Res.	Res.	Res.	Res.	Res.	Res.	Res.	Res.	Res.	Res.	Res.	Res.	SYSMEM
	Reset value																																1
0xFD0	C2ROM2_PIDR4	Res.	Res.	Res.	Res.	Res.	Res.	Res.	Res.	Res.	Res.	Res.	Res.	Res.	Res.	Res.	Res.	Res.	Res.	Res.	Res.	Res.	Res.	Res.	Res.	4KCOUNT [3:0]				JEP106CON[3:0]			
	Reset value																									0	0	0	0	0	1	0	0
0xFE0	C2ROM2_PIDR0	Res.	Res.	Res.	Res.	Res.	Res.	Res.	Res.	Res.	Res.	Res.	Res.	Res.	Res.	Res.	Res.	Res.	Res.	Res.	Res.	Res.	Res.	Res.	Res.	PARTNUM[7:0]							
	Reset value																									1	1	0	0	0	0	0	0
0xFE4	C2ROM2_PIDR1	Res.	Res.	Res.	Res.	Res.	Res.	Res.	Res.	Res.	Res.	Res.	Res.	Res.	Res.	Res.	Res.	Res.	Res.	Res.	Res.	Res.	Res.	Res.	Res.	JEP106ID [3:0]				PARTNUM [11:8]			
	Reset value																									1	0	1	1	0	1	0	0
0xFE8	C2ROM2_PIDR2	Res.	Res.	Res.	Res.	Res.	Res.	Res.	Res.	Res.	Res.	Res.	Res.	Res.	Res.	Res.	Res.	Res.	Res.	Res.	Res.	Res.	Res.	Res.	Res.	REVISION [3:0]				JEDEC	JEP106ID [6:4]		
	Reset value																									0	0	0	0	1	0	1	1
0xFEC	C2ROM2_PIDR3	Res.	Res.	Res.	Res.	Res.	Res.	Res.	Res.	Res.	Res.	Res.	Res.	Res.	Res.	Res.	Res.	Res.	Res.	Res.	Res.	Res.	Res.	Res.	Res.	REVAND[3:0]				CMOD[3:0]			
	Reset value																									0	0	0	0	0	0	0	0
0xFF0	C2ROM2_CIDR0	Res.	Res.	Res.	Res.	Res.	Res.	Res.	Res.	Res.	Res.	Res.	Res.	Res.	Res.	Res.	Res.	Res.	Res.	Res.	Res.	Res.	Res.	Res.	Res.	PREAMBLE[7:0]							
	Reset value																									0	0	0	0	1	1	0	1
0xFF4	C2ROM2_CIDR1	Res.	Res.	Res.	Res.	Res.	Res.	Res.	Res.	Res.	Res.	Res.	Res.	Res.	Res.	Res.	Res.	Res.	Res.	Res.	Res.	Res.	Res.	Res.	Res.	CLASS[3:0]				PREAMBLE [11:8]			
	Reset value																									0	0	0	1	0	0	0	0
0xFF8	C2ROM2_CIDR2	Res.	Res.	Res.	Res.	Res.	Res.	Res.	Res.	Res.	Res.	Res.	Res.	Res.	Res.	Res.	Res.	Res.	Res.	Res.	Res.	Res.	Res.	Res.	Res.	PREAMBLE[19:12]							
	Reset value																									0	0	0	0	0	1	0	1
0xFFC	C2ROM2_CIDR3	Res.	Res.	Res.	Res.	Res.	Res.	Res.	Res.	Res.	Res.	Res.	Res.	Res.	Res.	Res.	Res.	Res.	Res.	Res.	Res.	Res.	Res.	Res.	Res.	PREAMBLE[27:20]							
	Reset value																									1	0	1	1	0	0	0	1

Refer to *Section 33.9: CPU2 ROM tables* for the register boundary addresses.

33.10 CPU2 data watchpoint and trace unit (DWT)

The DWT provides four comparators that can be used as:

- Watchpoint
- PC sampling trigger
- Data address sampling trigger
- Data comparator (for comparator 1 only)
- Clock cycle counter comparator (for comparator 0 only)

It also contains counters for:

- Clock cycles
- Folded instructions
- Load store unit (LSU) operations
- Sleep cycles
- Number of cycles per instruction
- Interrupt overhead

A DWT comparator compares the value held in its DWT_COMPR register with one of the following items:

- a data address
- an instruction address
- a data value
- the cycle count value (comparator 0 only)

For address matching, the comparator can use a mask, so it matches a range of addresses.

On a successful match, the comparator generates one of the following:

- One or more DWT Data trace packets, containing one or more of:
  - the address of the instruction that caused a data access
  - an address offset, bits[15:0] of the data access address
  - the matched data value.
- A watchpoint debug event, on either the PC value or the accessed data address.
- A CMPMATCH[N] event, that signals the match outside the DWT unit.

A watchpoint debug event either generates a DebugMonitor exception, or causes the processor to halt execution and enter Debug state.

For more details on how to use the DWT, refer to the Arm®v7-M Architecture Reference Manual *[5]*.

33.10.1 DWT control register (DWT_CTRLR)

Address offset: 0x000

Reset value: 0x4000 0000

31	30	29	28	27	26	25	24	23	22	21	20	19	18	17	16
NUMCOMP[3:0].				NOTRCPKT	NOEXTTRIG	NOCYCCNT	NOPRFCNT	Res.	CYCEVTENA	FOLDEVTENA	LSUEVTENA	SLEEPEVTENA	EXCEVTENA	CPIEVTENA	EXCTRCENA
r	r	r	r	r	r	r	r		rw	rw	rw	rw	rw	rw	rw
15	14	13	12	11	10	9	8	7	6	5	4	3	2	1	0
Res.	Res.	Res.	PCSAMPLENA	SYNCTAP[1:0]		CYCTAP	POSTINIT[3:0]				POSTRESET[3:0]				CYCCNTENA
			rw	rw	rw	rw	rw	rw	rw	rw	rw	rw	rw	rw	rw

Bits 31:28 **NUMCOMP**: Number of comparators implemented (read only)
0x4: Four comparators

Bit 27 **NOTRCPKT**: Trace sampling and exception tracing support (read only)
0x0: Supported

Bit 26 **NOEXTTRIG**: External match signal, CMPMATCH support (read only)
0x0: Supported

Bit 25 **NOCYCCNT**: Cycle counter support (read only)
0x0: Supported

Bit 24 **NOPRFCNT**: Profiling counter support (read only)
0x0: Supported

Bit 23 Reserved, must be kept at reset value.

Bit 22 **CYCEVTENA**: Enable for POSTCNT underflow event counter packet generation
0x0: Disabled
0x1: Enabled

Bit 21 **FOLDEVTENA**: Enable for folded instruction counter overflow event generation
0x0: Disabled
0x1: Enabled

Bit 20 **LSUEVTENA**: Enable for LSU counter overflow event generation
0x0: Disabled
0x1: Enabled

Bit 19 **SLEEPEVTENA**: Enable for sleep counter overflow event generation
0x0: Disabled
0x1: Enabled

Bit 18 **EXCEVTENA**: Enable for exception overhead counter overflow event generation
0x0: Disabled
0x1: Enabled

Bit 17 **CPIEVTENA**: Enable for CPI counter overflow event generation
0x0: Disabled
0x1: Enabled

Bit 16 **EXCTRCENA**: Enable for exception trace generation
0x0: Disabled
0x1: Enabled

Bits 15:13 Reserved, must be kept at reset value.

Bit 12 **PCSAMPLENA**: Enables use of POSTCNT counter as a timer for Periodic PC sample packet generation.

0x0: Disabled
0x1: Enabled

Bits 11:10 **SYNCTAP[1:0]**: Selects the position of the synchronization packet counter tap on the CYCCNT counter. This determines the synchronization packet rate.

0x0: Disabled. No synchronization packets
0x1: Tap at CYCCNT[24]
0x2: Tap at CYCCNT[26]
0x3: Tap at CYCCNT[28]

Bit 9 **CYCTAP**: Selects the position of the POSTCNT tap on the CYCCNT counter.

0x0: Tap at CYCCNT[6]
0x1: Tap at CYCCNT[10]

Bits 8:5 **POSTINIT[3:0]**: Initial value of the POSTCNT counter. Writes to this field are ignored if POSTCNT counter is enabled (ie. CYCEVTENA or PCSAMPLENA must be reset prior to writing POSTINIT).

Bits 4:1 **POSTPRESET[3:0]**: Reload value of the POSTCNT counter.

Bit 0 **CYCCNTENA**: Enables CYCCNT counter.

0x0: Disabled
0x1: Enabled

33.10.2 DWT cycle count register (DWT_CYCCNTR)

Address offset: 0x004

Reset value: 0x0000 0000

31	30	29	28	27	26	25	24	23	22	21	20	19	18	17	16
CYCCNT[31:16]															
r	r	r	r	r	r	r	r	r	r	r	r	r	r	r	r
15	14	13	12	11	10	9	8	7	6	5	4	3	2	1	0
CYCCNT[15:0]															
r	r	r	r	r	r	r	r	r	r	r	r	r	r	r	r

Bits 31:0 **CYCCNT[31:0]**: Processor clock cycle counter

33.10.3 DWT CPI count register (DWT_CPICNTR)

Address offset: 0x008

Reset value: 0x0000 0000

31	30	29	28	27	26	25	24	23	22	21	20	19	18	17	16
Res.	Res.	Res.	Res.	Res.	Res.	Res.	Res.	Res.	Res.	Res.	Res.	Res.	Res.	Res.	Res.

15	14	13	12	11	10	9	8	7	6	5	4	3	2	1	0
Res.	Res.	Res.	Res.	Res.	Res.	Res.	Res.	CPICNT[7:0]							
								rw	rw	rw	rw	rw	rw	rw	rw

Bits 31:8 Reserved, must be kept at reset value.

Bits 7:0 **CPICNT[7:0]**: CPI counter. Counts additional cycles required to execute multi-cycle instructions, except those recorded by DWT_LSUCNTR, and counts any instruction fetch stalls.

33.10.4 DWT exception count register (DWT_EXCCNTR)

Address offset: 0x00C

Reset value: 0x0000 0000

31	30	29	28	27	26	25	24	23	22	21	20	19	18	17	16
Res.	Res.	Res.	Res.	Res.	Res.	Res.	Res.	Res.	Res.	Res.	Res.	Res.	Res.	Res.	Res.

15	14	13	12	11	10	9	8	7	6	5	4	3	2	1	0
Res.	Res.	Res.	Res.	Res.	Res.	Res.	Res.	EXCCNT[7:0]							
								rw	rw	rw	rw	rw	rw	rw	rw

Bits 31:8 Reserved, must be kept at reset value.

Bits 7:0 **EXCCNT[7:0]**: Exception overhead cycle counter. Counts the number of cycles spent in exception processing.

33.10.5 DWT sleep count register (DWT_SLPCNTR)

Address offset: 0x010

Reset value: 0x0000 0000

31	30	29	28	27	26	25	24	23	22	21	20	19	18	17	16
Res.	Res.	Res.	Res.	Res.	Res.	Res.	Res.	Res.	Res.	Res.	Res.	Res.	Res.	Res.	Res.

15	14	13	12	11	10	9	8	7	6	5	4	3	2	1	0
Res.	Res.	Res.	Res.	Res.	Res.	Res.	Res.	SLEEPCNT[7:0]							
								rw	rw	rw	rw	rw	rw	rw	rw

Bits 31:8 Reserved, must be kept at reset value.

Bits 7:0 **SLEEPCNT[7:0]**: Sleep cycle counter. Counts the number of cycles spent in sleep mode (WFI, WFE, sleep-on-exit).

33.10.6 DWT LSU count register (DWT_LSUCNTR)

Address offset: 0x014

Reset value: 0x0000 0000

31	30	29	28	27	26	25	24	23	22	21	20	19	18	17	16
Res.	Res.	Res.	Res.	Res.	Res.	Res.	Res.	Res.	Res.	Res.	Res.	Res.	Res.	Res.	Res.

15	14	13	12	11	10	9	8	7	6	5	4	3	2	1	0
Res.	Res.	Res.	Res.	Res.	Res.	Res.	Res.	LSUCNT[7:0]							
								rw	rw	rw	rw	rw	rw	rw	rw

Bits 31:8 Reserved, must be kept at reset value.

Bits 7:0 **LSUCNT[7:0]**: Load store counter. Counts additional cycles required to execute load and store instructions.

33.10.7 DWT fold count register (DWT_FOLDCNTR)

Address offset: 0x018

Reset value: 0x0000 0000

31	30	29	28	27	26	25	24	23	22	21	20	19	18	17	16
Res.	Res.	Res.	Res.	Res.	Res.	Res.	Res.	Res.	Res.	Res.	Res.	Res.	Res.	Res.	Res.

15	14	13	12	11	10	9	8	7	6	5	4	3	2	1	0
Res.	Res.	Res.	Res.	Res.	Res.	Res.	Res.	FOLDCNT[7:0]							
								rw	rw	rw	rw	rw	rw	rw	rw

Bits 31:8 Reserved, must be kept at reset value.

Bits 7:0 **FOLDCNT[7:0]**: Folded instruction counter. Increments on each instruction that takes 0 cycles.

33.10.8 DWT program counter sample register (DWT_PCSR)

Address offset: 0x01C

Reset value: 0x0000 0000

31	30	29	28	27	26	25	24	23	22	21	20	19	18	17	16
EIASAMPLE[31:16]															
r	r	r	r	r	r	r	r	r	r	r	r	r	r	r	r

15	14	13	12	11	10	9	8	7	6	5	4	3	2	1	0
EIASAMPLE[15:0]															
r	r	r	r	r	r	r	r	r	r	r	r	r	r	r	r

Bits 31:0 **EIASAMPLE[31:0]**: Executed Instruction Address sample value. Samples the current value of the program counter.

33.10.9 DWT comparator register x (DWT_COMPxR)

Address offset: 0x020 + x * 0x10 (for x = 0 to 3)

Reset value: 0x0000 0000

31	30	29	28	27	26	25	24	23	22	21	20	19	18	17	16
COMP[31:16]															
r	r	r	r	r	r	r	r	r	r	r	r	r	r	r	r
15	14	13	12	11	10	9	8	7	6	5	4	3	2	1	0
COMP[15:0]															
r	r	r	r	r	r	r	r	r	r	r	r	r	r	r	r

Bits 31:0 **COMP[31:0]**: Reference value for comparison.

33.10.10 DWT mask register x (DWT_MASKxR)

Address offset: 0x024 + x * 0x10 (for x = 0 to 3)

Reset value: 0x0000 0000

31	30	29	28	27	26	25	24	23	22	21	20	19	18	17	16
Res.	Res.	Res.	Res.	Res.	Res.	Res.	Res.	Res.	Res.	Res.	Res.	Res.	Res.	Res.	Res.
15	14	13	12	11	10	9	8	7	6	5	4	3	2	1	0
Res.	Res.	Res.	Res.	Res.	Res.	Res.	Res.	Res.	Res.	Res.	MASK[4:0]				
											rw	rw	rw	rw	rw

Bits 31:5 Reserved, must be kept at reset value.

Bits 4:0 **MASK[4:0]**: Comparator mask size. Provides the size of the ignore mask applied to the access address for address range matching by comparator n. A debugger can write 0b11111 to this field and then read the register back to determine the maximum mask size supported.

33.10.11 DWT function register x (DWT_FUNCTxR)

Address offset: 0x028 + x * 0x10 (for x = 0 to 3)

Reset value: 0x0000 0000

31	30	29	28	27	26	25	24	23	22	21	20	19	18	17	16
Res.	Res.	Res.	Res.	Res.	Res.	Res.	MATCHED	Res.	Res.	Res.	Res.	DATAVADDR1[3:0]			
							r					rw	rw	rw	rw

15	14	13	12	11	10	9	8	7	6	5	4	3	2	1	0
DATAVADDR0[3:0]				DATAVSIZE[1:0]		LINK1 ENA	DATAV MATCH	CYC MATCH	Res.	EMIT RANGE	Res.	FUNCTION[3:0]			
rw	rw	rw	rw	rw	rw	rw	rw	rw		rw		rw	rw	rw	rw

Bits 31:25 Reserved, must be kept at reset value.

Bit 24 **MATCHED**: Comparator match (read only). Indicates if a comparator match has occurred since the register was last read.

0: No match
1: Match occurred

Bits 23:20 Reserved, must be kept at reset value.

Bits 19:16 **DATAVADDR1[3:0]**: When the DATAVMATCH and LNK1ENA bits are both 1, this field can hold the comparator number of a second comparator to use for linked address comparison.

Bits 15:12 **DATAVADDR0[3:0]**: When the DATAVMATCH and LNK1ENA bits are both 1, this field can hold the comparator number of a comparator to use for linked address comparison.

Bits 11:10 **DATAVSIZE[1:0]**: For data value matching, specifies the size of the required data comparison.

0x0: Byte
0x1: Half word
0x2: Word
0x3: reserved

Bit 9 **LNK1ENA**: Indicates whether use of a second linked comparator is supported (read only).

0x1: Supported

Bit 8 **DATAVMATCH**: Enables cycle comparison.

0x0: Perform address comparison
0x1: Perform data value comparison

Bit 7 **CYCMATCH**: Enables cycle count comparison on comparator 0. This field is reserved for other comparators.

0x0: No cycle count comparison
0x1: Compare DWT_COMP0R with the cycle counter, DWT_CYCCNTR

Bit 6 Reserved, must be kept at reset value.

Bit 5 **EMITRANGE**: Enables generation of data trace address offset packets (containing data address bits 0 to 15)

0x0: Disabled
0x1: Enabled

Bit 4 Reserved, must be kept at reset value.

Bits 3:0 **FUNCTION[3:0]**: Selects action to take on comparator match. The meaning of this bit field depends on the setting of the DATAVMATCH and CYCMATCH fields. See *[5]*.

33.10.12 DWT CoreSight peripheral identity register 4 (DWT_PIDR4)

Address offset: 0xFD0

Reset value: 0x0000 0004

31	30	29	28	27	26	25	24	23	22	21	20	19	18	17	16
Res.	Res.	Res.	Res.	Res.	Res.	Res.	Res.	Res.	Res.	Res.	Res.	Res.	Res.	Res.	Res.

15	14	13	12	11	10	9	8	7	6	5	4	3	2	1	0
Res.	Res.	Res.	Res.	Res.	Res.	Res.	Res.	4KCOUNT[3:0]				JEP106CON[3:0]			
								r	r	r	r	r	r	r	r

Bits 31:8 Reserved, must be kept at reset value.

Bits 7:4 **4KCOUNT[3:0]**: register file size
0x0: Register file occupies a single 4 KB region

Bits 3:0 **JEP106CON[3:0]**: JEP106 continuation code
0x4: Arm® JEDEC code

33.10.13 DWT CoreSight peripheral identity register 0 (DWT_PIDR0)

Address offset: 0xFE0

Reset value: 0x0000 0002

31	30	29	28	27	26	25	24	23	22	21	20	19	18	17	16
Res.	Res.	Res.	Res.	Res.	Res.	Res.	Res.	Res.	Res.	Res.	Res.	Res.	Res.	Res.	Res.

15	14	13	12	11	10	9	8	7	6	5	4	3	2	1	0
Res.	Res.	Res.	Res.	Res.	Res.	Res.	Res.	PARTNUM[7:0]							
								r	r	r	r	r	r	r	r

Bits 31:8 Reserved, must be kept at reset value.

Bits 7:0 **PARTNUM[7:0]**: Part number bits [7:0]
0x02: DWT part number

33.10.14 DWT CoreSight peripheral identity register 1 (DWT_PIDR1)

Address offset: 0xFE4

Reset value: 0x0000 00B9

31	30	29	28	27	26	25	24	23	22	21	20	19	18	17	16
Res.	Res.	Res.	Res.	Res.	Res.	Res.	Res.	Res.	Res.	Res.	Res.	Res.	Res.	Res.	Res.

15	14	13	12	11	10	9	8	7	6	5	4	3	2	1	0
Res.	Res.	Res.	Res.	Res.	Res.	Res.	Res.	JEP106ID[3:0]				PARTNUM[11:8]			
								r	r	r	r	r	r	r	r

Bit 31:8 Reserved, must be kept at reset value.

Bits 7:4 **JEP106ID[3:0]**: JEP106 identity code bits [3:0]
0xB: Arm® JEDEC code

Bits 3:0 **PARTNUM[11:8]**: Part number bits [11:8]
0x9: DWT part number

33.10.15 DWT CoreSight peripheral identity register 2 (DWT_PIDR2)

Address offset: 0xFE8

Reset value: 0x0000 003B

31	30	29	28	27	26	25	24	23	22	21	20	19	18	17	16
Res.	Res.	Res.	Res.	Res.	Res.	Res.	Res.	Res.	Res.	Res.	Res.	Res.	Res.	Res.	Res.

15	14	13	12	11	10	9	8	7	6	5	4	3	2	1	0
Res.	Res.	Res.	Res.	Res.	Res.	Res.	Res.	REVISION[3:0]				JEDEC	JEP106ID[6:4]		
								r	r	r	r	r	r	r	r

Bit 31:8 Reserved, must be kept at reset value.

Bit s 7:4 **REVISION[3:0]**: Component revision number
0x3: r0p4

Bit 3 **JEDEC**: JEDEC assigned value
0x1: Designer ID specified by JEDEC

Bits 2:0 **JEP106ID[6:4]**: JEP106 identity code bits [6:4]
0x3: Arm® JEDEC code

33.10.16 DWT CoreSight peripheral identity register 3 (DWT_PIDR3)

Address offset: 0xFEC

Reset value: 0x0000 0000

31	30	29	28	27	26	25	24	23	22	21	20	19	18	17	16
Res.	Res.	Res.	Res.	Res.	Res.	Res.	Res.	Res.	Res.	Res.	Res.	Res.	Res.	Res.	Res.

15	14	13	12	11	10	9	8	7	6	5	4	3	2	1	0
Res.	Res.	Res.	Res.	Res.	Res.	Res.	Res.	REVAND[3:0]				CMOD[3:0]			
								r	r	r	r	r	r	r	r

Bit 31:8 Reserved, must be kept at reset value.

Bits 7:4 **REVAND[3:0]**: metal fix version
0x0: No metal fix

Bits 3:0 **CMOD[3:0]**: Customer modified
0x0: No customer modifications

33.10.17 DWT CoreSight component identity register 0 (DWT_CIDR0)

Address offset: 0xFF0

Reset value: 0x0000 000D

31	30	29	28	27	26	25	24	23	22	21	20	19	18	17	16
Res.	Res.	Res.	Res.	Res.	Res.	Res.	Res.	Res.	Res.	Res.	Res.	Res.	Res.	Res.	Res.

15	14	13	12	11	10	9	8	7	6	5	4	3	2	1	0
Res.	Res.	Res.	Res.	Res.	Res.	Res.	Res.	PREAMBLE[7:0]							
								r	r	r	r	r	r	r	r

Bits 31:8 Reserved, must be kept at reset value.

Bits 7:0 **PREAMBLE[7:0]**: Component ID bits [7:0]
0x0D: Common ID value

33.10.18 DWT CoreSight peripheral identity register 1 (DWT_CIDR1)

Address offset: 0xFF4

Reset value: 0x0000 00E0

31	30	29	28	27	26	25	24	23	22	21	20	19	18	17	16
Res.	Res.	Res.	Res.	Res.	Res.	Res.	Res.	Res.	Res.	Res.	Res.	Res.	Res.	Res.	Res.

15	14	13	12	11	10	9	8	7	6	5	4	3	2	1	0
Res.	Res.	Res.	Res.	Res.	Res.	Res.	Res.	CLASS[3:0]				PREAMBLE[11:8]			
								r	r	r	r	r	r	r	r

Bit 31:8 Reserved, must be kept at reset value.

Bits 7:4 **CLASS[3:0]**: Component ID bits [15:12] - component class
0xE: Trace generator component

Bits 3:0 **PREAMBLE[11:8]**: Component ID bits [11:8]
0x0: Common ID value

33.10.19 DWT CoreSight component identity register 2 (DWT_CIDR2)

Address offset: 0xFF8

Reset value: 0x0000 0005

31	30	29	28	27	26	25	24	23	22	21	20	19	18	17	16
Res.	Res.	Res.	Res.	Res.	Res.	Res.	Res.	Res.	Res.	Res.	Res.	Res.	Res.	Res.	Res.
15	14	13	12	11	10	9	8	7	6	5	4	3	2	1	0
Res.	Res.	Res.	Res.	Res.	Res.	Res.	Res.	PREAMBLE[19:12]							
								r	r	r	r	r	r	r	r

Bits 31:8 Reserved, must be kept at reset value.

Bits 7:0 **PREAMBLE[19:12]**: Component ID bits [23:16]
0x05: Common ID value

33.10.20 DWT CoreSight component identity register 3 (DWT_CIDR3)

Address offset: 0xFFC

Reset value: 0x0000 00B1

31	30	29	28	27	26	25	24	23	22	21	20	19	18	17	16
Res.	Res.	Res.	Res.	Res.	Res.	Res.	Res.	Res.	Res.	Res.	Res.	Res.	Res.	Res.	Res.
15	14	13	12	11	10	9	8	7	6	5	4	3	2	1	0
Res.	Res.	Res.	Res.	Res.	Res.	Res.	Res.	PREAMBLE[27:20]							
								r	r	r	r	r	r	r	r

Bits 31:8 Reserved, must be kept at reset value.

Bits 7:0 **PREAMBLE[27:20]**: Component ID bits [31:24]
0xB1: Common ID value

33.10.21 CPU2 DWT registers

The CPU2 DWT registers are located at address range 0xE0001000 to 0xE0001FFC, on the AHBD.

Table 223. CPU2 DWT register map and reset values

Offset	Register name	31	30	29	28	27	26	25	24	23	22	21	20	19	18	17	16	15	14	13	12	11	10	9	8	7	6	5	4	3	2	1	0
0x000	DWT_CTRLR	NUMCOMP[3:0]				NOTRCPKT	NOEXTTRIG	NOCYCCNT	NOPRFCNT	Res.	CYCEVTENA	FOLDEVTENA	LSUEVTENA	SLEEPEVTENA	EXCEVTENA	CPIEVTENA	EXCTRCENA	Res.	Res.	Res.	PCSAMPLENA	SYNCTAP[1:0]		CYCTAP	POSINIT[3:0]				POSTPRESET[3:0]			CYCCNTENA
	Reset value	0	1	0	0	0	0	0	0		0	0	0	0	0	0	0				0	0	0	0	0	0	0	0	0	0	0	0	0
0x004	DWT_CYCCNTR	CYCCNT[31:0]																															
	Reset value	0	0	0	0	0	0	0	0	0	0	0	0	0	0	0	0	0	0	0	0	0	0	0	0	0	0	0	0	0	0	0	0
0x008	DWT_CPICNTR	Res.	Res.	Res.	Res.	Res.	Res.	Res.	Res.	Res.	Res.	Res.	Res.	Res.	Res.	Res.	Res.	Res.	Res.	Res.	Res.	Res.	Res.	Res.	Res.	CPICNT[7:0]							
	Reset value																									0	0	0	0	0	0	0	0
0x00C	DWT_EXCCNTR	Res.	Res.	Res.	Res.	Res.	Res.	Res.	Res.	Res.	Res.	Res.	Res.	Res.	Res.	Res.	Res.	Res.	Res.	Res.	Res.	Res.	Res.	Res.	Res.	EXCCNT[7:0]							
	Reset value																									0	0	0	0	0	0	0	0
0x010	DWT_SLPCNTR	Res.	Res.	Res.	Res.	Res.	Res.	Res.	Res.	Res.	Res.	Res.	Res.	Res.	Res.	Res.	Res.	Res.	Res.	Res.	Res.	Res.	Res.	Res.	Res.	SLEEPCNT[7:0]							
	Reset value																									0	0	0	0	0	0	0	0
0x014	DWT_LSUCNTR	Res.	Res.	Res.	Res.	Res.	Res.	Res.	Res.	Res.	Res.	Res.	Res.	Res.	Res.	Res.	Res.	Res.	Res.	Res.	Res.	Res.	Res.	Res.	Res.	LSUCNT[7:0]							
	Reset value																									0	0	0	0	0	0	0	0
0x018	DWT_FOLDCNTR	Res.	Res.	Res.	Res.	Res.	Res.	Res.	Res.	Res.	Res.	Res.	Res.	Res.	Res.	Res.	Res.	Res.	Res.	Res.	Res.	Res.	Res.	Res.	Res.	FOLDCNT[7:0]							
	Reset value																									0	0	0	0	0	0	0	0
0x01C	DWT_PCSR	EIASAMPLE[31:0]																															
	Reset value	0	0	0	0	0	0	0	0	0	0	0	0	0	0	0	0	0	0	0	0	0	0	0	0	0	0	0	0	0	0	0	0
0x020	DWT_COMP0R	COMP[31:0]																															
	Reset value	0	0	0	0	0	0	0	0	0	0	0	0	0	0	0	0	0	0	0	0	0	0	0	0	0	0	0	0	0	0	0	0
0x024	DWT_MASK0R	Res.	Res.	Res.	Res.	Res.	Res.	Res.	Res.	Res.	Res.	Res.	Res.	Res.	Res.	Res.	Res.	Res.	Res.	Res.	Res.	Res.	Res.	Res.	Res.	Res.	Res.	Res.	MASK[4:0]				
	Reset value																												0	0	0	0	0
0x028	DWT_FUNCT0R	Res.	Res.	Res.	Res.	Res.	Res.	Res.	MATCHED	Res.	Res.	Res.	Res.	DATAVADDR1[3:0]				DATAVADDR0[3:0]				DATAVSIZE[1:0]		LNK1ENA	DATAVMATCH	CYCMATCH	Res.	EMITRANGE	Res.	FUNCTION[3:0]			
	Reset value								0					0	0	0	0	0	0	0	0	0	0	0	0	0		0		0	0	0	0
0x030	DWT_COMP1R	COMP[31:0]																															
	Reset value	0	0	0	0	0	0	0	0	0	0	0	0	0	0	0	0	0	0	0	0	0	0	0	0	0	0	0	0	0	0	0	0
0x034	DWT_MASK1R	Res.	Res.	Res.	Res.	Res.	Res.	Res.	Res.	Res.	Res.	Res.	Res.	Res.	Res.	Res.	Res.	Res.	Res.	Res.	Res.	Res.	Res.	Res.	Res.	Res.	Res.	Res.	MASK[4:0]				
	Reset value																												0	0	0	0	0

Table 223. CPU2 DWT register map and reset values (continued)

Offset	Register name	31	30	29	28	27	26	25	24	23	22	21	20	19	18	17	16	15	14	13	12	11	10	9	8	7	6	5	4	3	2	1	0
0x038	DWT_FUNCT1R	Res.	Res.	Res.	Res.	Res.	Res.	Res.	MATCHED	Res.	Res.	Res.	q	DATAVADDR1[3:0]				DATAVADDR0[3:0]				DATAVSIZE[1:0]		LNK1ENA	DATAVMATCH	CYCMATCH	Res.	EMITRANGE	Res.	FUNCTION[3:0]			
	Reset value								0					0	0	0	0	0	0	0	0	0	0	0	0	0		0		0	0	0	0
0x040	DWT_COMP2R	COMP[31:0]																															
	Reset value	0	0	0	0	0	0	0	0	0	0	0	0	0	0	0	0	0	0	0	0	0	0	0	0	0	0	0	0	0	0	0	0
0x044	DWT_MASK2R	Res.	Res.	Res.	Res.	Res.	Res.	Res.	Res.	Res.	Res.	Res.	Res.	Res.	Res.	Res.	Res.	Res.	Res.	Res.	Res.	Res.	Res.	Res.	Res.	Res.	Res.	Res.	MASK[4:0]				
	Reset value																												0	0	0	0	0
0x048	DWT_FUNCT2R	Res.	Res.	Res.	Res.	Res.	Res.	Res.	MATCHED	Res.	Res.	Res.	Res.	DATAVADDR1[3:0]				DATAVADDR0[3:0]				DATAVSIZE[1:0]		LNK1ENA	DATAVMATCH	CYCMATCH	Res.	EMITRANGE	Res.	FUNCTION[3:0]			
	Reset value								0					0	0	0	0	0	0	0	0	0	0	0	0	0		0		0	0	0	0
0x050	DWT_COMP3R	COMP[31:0]																															
	Reset value	0	0	0	0	0	0	0	0	0	0	0	0	0	0	0	0	0	0	0	0	0	0	0	0	0	0	0	0	0	0	0	0
0x054	DWT_MASK3R	Res.	Res.	Res.	Res.	Res.	Res.	Res.	Res.	Res.	Res.	Res.	Res.	Res.	Res.	Res.	Res.	Res.	Res.	Res.	Res.	Res.	Res.	Res.	Res.	Res.	Res.	Res.	MASK[4:0]				
	Reset value																												0	0	0	0	0
0x058	DWT_FUNCT3R	Res.	Res.	Res.	Res.	Res.	Res.	Res.	MATCHED	Res.	Res.	Res.	Res.	DATAVADDR1[3:0]				DATAVADDR0[3:0]				DATAVSIZE[1:0]		LNK1ENA	DATAVMATCH	CYCMATCH	Res.	EMITRANGE	Res.	FUNCTION[3:0]			
	Reset value								0					0	0	0	0	0	0	0	0	0	0	0	0	0		0		0	0	0	0
0xFD0	DWT_PIDR4	Res.	Res.	Res.	Res.	Res.	Res.	Res.	Res.	Res.	Res.	Res.	Res.	Res.	Res.	Res.	Res.	Res.	Res.	Res.	Res.	Res.	Res.	Res.	Res.	4KCOUNT [3:0]				JEP106CON [3:0]			
	Reset value																									0	0	0	0	0	1	0	0
0xFE0	DWT_PIDR0	Res.	Res.	Res.	Res.	Res.	Res.	Res.	Res.	Res.	Res.	Res.	Res.	Res.	Res.	Res.	Res.	Res.	Res.	Res.	Res.	Res.	Res.	Res.	Res.	PARTNUM[7:0]							
	Reset value																									0	0	0	0	0	0	1	0
0xFE4	DWT_PIDR1	Res.	Res.	Res.	Res.	Res.	Res.	Res.	Res.	Res.	Res.	Res.	Res.	Res.	Res.	Res.	Res.	Res.	Res.	Res.	Res.	Res.	Res.	Res.	Res.	JEP106ID [3:0]				PARTNUM [11:8]			
	Reset value																									1	0	1	1	0	0	0	0
0xFE8	DWT_PIDR2	Res.	Res.	Res.	Res.	Res.	Res.	Res.	Res.	Res.	Res.	Res.	Res.	Res.	Res.	Res.	Res.	Res.	Res.	Res.	Res.	Res.	Res.	Res.	Res.	REVISION [3:0]				JEDEC	JEP106ID [6:4]		
	Reset value																									0	0	1	1	1	0	1	1
0xFEC	DWT_PIDR3	Res.	Res.	Res.	Res.	Res.	Res.	Res.	Res.	Res.	Res.	Res.	Res.	Res.	Res.	Res.	Res.	Res.	Res.	Res.	Res.	Res.	Res.	Res.	Res.	REVAND[3:0]				CMOD[3:0]			
	Reset value																									0	0	0	0	0	0	0	0
0xFF0	DWT_CIDR0	Res.	Res.	Res.	Res.	Res.	Res.	Res.	Res.	Res.	Res.	Res.	Res.	Res.	Res.	Res.	Res.	Res.	Res.	Res.	Res.	Res.	Res.	Res.	Res.	PREAMBLE[7:0]							
	Reset value																									0	0	0	0	1	1	0	1
0xFF4	DWT_CIDR1	Res.	Res.	Res.	Res.	Res.	Res.	Res.	Res.	Res.	Res.	Res.	Res.	Res.	Res.	Res.	Res.	Res.	Res.	Res.	Res.	Res.	Res.	Res.	Res.	CLASS[3:0]				PREAMBLE[11:8]			
	Reset value																									0	1	1	1	0	0	0	0

Table 223. CPU2 DWT register map and reset values (continued)

Offset	Register name	31	30	29	28	27	26	25	24	23	22	21	20	19	18	17	16	15	14	13	12	11	10	9	8	7	6	5	4	3	2	1	0
0xFF8	DWT_CIDR2	Res.	Res.	Res.	Res.	Res.	Res.	Res.	Res.	Res.	Res.	Res.	Res.	Res.	Res.	Res.	Res.	Res.	Res.	Res.	Res.	Res.	Res.	Res.	Res.	PREAMBLE[19:12]							
	Reset value																									0	0	0	0	0	1	0	1
0xFFC	DWT_CIDR3	Res.	Res.	Res.	Res.	Res.	Res.	Res.	Res.	Res.	Res.	Res.	Res.	Res.	Res.	Res.	Res.	Res.	Res.	Res.	Res.	Res.	Res.	Res.	Res.	PREAMBLE[27:20]							
	Reset value																									1	0	1	1	0	0	0	1

Refer to *Section 33.9: CPU2 ROM tables* for the register boundary addresses.

33.11 CPU2 breakpoint unit (PBU)

The BPU allows the user to set hardware breakpoints. It contains eight comparators that monitor the instruction fetch address and return a breakpoint instruction when a match is detected.The CPU2 PBU does not support Flash memory patch functionality.

33.11.1 BPU control register (BPU_CTRLR)

Address offset: 0x000

Reset value: 0x0000 0080

31	30	29	28	27	26	25	24	23	22	21	20	19	18	17	16
Res.	Res.	Res.	Res.	Res.	Res.	Res.	Res.	Res.	Res.	Res.	Res.	Res.	Res.	Res.	Res.

15	14	13	12	11	10	9	8	7	6	5	4	3	2	1	0
Res.	NUM_CODE[6:4]			NUM_LIT[3:0]				NUM_CODE[3:0]				Res.	Res.	KEY	ENABLE
	r	r	r	r	r	r	r	r	r	r	r			rw	rw

Bits 31:15 Reserved, must be kept at reset value.

Bits 14:12 **NUM_CODE[6:4]**: Number of instruction address comparators supported - least significant bits (read only).

0x0: 8 instruction comparators supported.

Bits 11:8 **NUM_LIT[3:0]**: Number of literal address comparators supported (read only).

0x0: No literal comparators supported.

Bits 7:4 **NUM_CODE[3:0]**: Number of instruction address comparators supported - least significant bits (read only).

0x8: 8 instruction comparators supported

Bit 1 **KEY**: Write protect key. A write to BPU_CTRLR register is ignored if this bit is not set to 1.

Bits 0 **ENABLE**: BPU enable

0x0: Disable

0x1: Enable

33.11.2 BPU remap register (BPU_REMAPR)

Address offset: 0x004

Reset value: 0x0000 0000

31	30	29	28	27	26	25	24	23	22	21	20	19	18	17	16
Res.	Res.	RMPSPT	Res.	Res.	Res.	Res.	Res.	Res.	Res.	Res.	Res.	Res.	Res.	Res.	Res.
		r													

15	14	13	12	11	10	9	8	7	6	5	4	3	2	1	0
Res.	Res.	Res.	Res.	Res.	Res.	Res.	Res.	Res.	Res.	Res.	Res.	Res.	Res.	Res.	Res.

Bits 31:30 Reserved, must be kept at reset value.

Bit 29 **RMPSPT**: Indicates whether Flash memory patch remap is supported (read only).
0x0: Remapping not supported.

Bits 28:0 Reserved, must be kept at reset value.

33.11.3 BPU comparator registers (BPU_COMPxR)

Address offset: 0x008 + x * 0x4 (for x = 0 to 7)

Reset value: 0x0000 0000

31	30	29	28	27	26	25	24	23	22	21	20	19	18	17	16
REPLACE[1:0]		Res.	COMP[26:14]												
rw			rw	rw	rw	rw	rw	rw	rw	rw	rw	rw	rw	rw	rw

15	14	13	12	11	10	9	8	7	6	5	4	3	2	1	0
COMP[13:0]														Res.	ENABLE
rw	rw	rw	rw	rw	rw	rw	rw	rw	rw	rw	rw	rw	rw		rw

Bits 31:30 **REPLACE[1:0]**: Defines the behavior when a match occurs between the COMP field and the instruction fetch address.
0x0: Reserved
0x1: Breakpoint on lower half-word, upper half-word is unaffected.
0x2: Breakpoint on upper half-word, lower half-word is unaffected.
0x3: Breakpoint on both upper and lower half-words.

Bit 29 Reserved, must be kept at reset value.

Bits 28:2 **COMP[26:0]**: Value to compare with address bits 28:2 of accesses to instruction code memory (0x00000000 to 0x1FFFFFFF). If a match occurs, the action to be taken is defined by the REPLACE field.

Bit 1 Reserved, must be kept at reset value.

Bit 0 **ENABLE**: Comparator enable. The comparator is only enabled if both this bit and the BPU ENABLE bit in the BPU_CTRLR register are set.
0: Disabled
1: Enabled

33.11.4 BPU CoreSight peripheral identity register 4 (BPU_PIDR4)

Address offset: 0xFD0

Reset value: 0x0000 0004

31	30	29	28	27	26	25	24	23	22	21	20	19	18	17	16
Res.	Res.	Res.	Res.	Res.	Res.	Res.	Res.	Res.	Res.	Res.	Res.	Res.	Res.	Res.	Res.

15	14	13	12	11	10	9	8	7	6	5	4	3	2	1	0
Res.	Res.	Res.	Res.	Res.	Res.	Res.	Res.	4KCOUNT[3:0]				JEP106CON[3:0]			
								r	r	r	r	r	r	r	r

Bits 31:8 Reserved, must be kept at reset value.

Bits 7:4 **4KCOUNT[3:0]**: register file size
0x0: Register file occupies a single 4 KB region

Bits 3:0 **JEP106CON[3:0]**: JEP106 continuation code
0x4: Arm® JEDEC code

33.11.5 BPU CoreSight peripheral identity register 0 (BPU_PIDR0)

Address offset: 0xFE0

Reset value: 0x0000 000C

31	30	29	28	27	26	25	24	23	22	21	20	19	18	17	16
Res.	Res.	Res.	Res.	Res.	Res.	Res.	Res.	Res.	Res.	Res.	Res.	Res.	Res.	Res.	Res.

15	14	13	12	11	10	9	8	7	6	5	4	3	2	1	0
Res.	Res.	Res.	Res.	Res.	Res.	Res.	Res.	PARTNUM[7:0]							
								r	r	r	r	r	r	r	r

Bits 31:8 Reserved, must be kept at reset value.

Bits 7:0 **PARTNUM[7:0]**: Part number bits [7:0]
0x0C: BPU part number

33.11.6 BPU CoreSight peripheral identity register 1 (BPU_PIDR1)

Address offset: 0xFE4

Reset value: 0x0000 00B0

31	30	29	28	27	26	25	24	23	22	21	20	19	18	17	16
Res.	Res.	Res.	Res.	Res.	Res.	Res.	Res.	Res.	Res.	Res.	Res.	Res.	Res.	Res.	Res.

15	14	13	12	11	10	9	8	7	6	5	4	3	2	1	0
Res.	Res.	Res.	Res.	Res.	Res.	Res.	Res.	JEP106ID[3:0]				PARTNUM[11:8]			
								r	r	r	r	r	r	r	r

Bit 31:8 Reserved, must be kept at reset value.

Bits 7:4 **JEP106ID[3:0]**: JEP106 identity code bits [3:0]
0xB: Arm® JEDEC code

Bits 3:0 **PARTNUM[11:8]**: Part number bits [11:8]
0x0: BPU part number

33.11.7 BPU CoreSight peripheral identity register 2 (BPU_PIDR2)

Address offset: 0xFE8

Reset value: 0x0000 002B

31	30	29	28	27	26	25	24	23	22	21	20	19	18	17	16
Res.	Res.	Res.	Res.	Res.	Res.	Res.	Res.	Res.	Res.	Res.	Res.	Res.	Res.	Res.	Res.
15	14	13	12	11	10	9	8	7	6	5	4	3	2	1	0
Res.	Res.	Res.	Res.	Res.	Res.	Res.	Res.	REVISION[3:0]				JEDEC	JEP106ID[6:4]		
								r	r	r	r	r	r	r	r

Bit 31:8 Reserved, must be kept at reset value.

Bit s 7:4 **REVISION[3:0]**: Component revision number
0x2: r0p3

Bit 3 **JEDEC**: JEDEC assigned value
0x1: Designer ID specified by JEDEC

Bits 2:0 **JEP106ID[6:4]**: JEP106 identity code bits [6:4]
0x3: Arm® JEDEC code

33.11.8 BPU CoreSight peripheral identity register 3 (BPU_PIDR3)

Address offset: 0xFEC

Reset value: 0x0000 0000

31	30	29	28	27	26	25	24	23	22	21	20	19	18	17	16
Res.	Res.	Res.	Res.	Res.	Res.	Res.	Res.	Res.	Res.	Res.	Res.	Res.	Res.	Res.	Res.
15	14	13	12	11	10	9	8	7	6	5	4	3	2	1	0
Res.	Res.	Res.	Res.	Res.	Res.	Res.	Res.	REVAND[3:0]				CMOD[3:0]			
								r	r	r	r	r	r	r	r

Bit 31:8 Reserved, must be kept at reset value.

Bits 7:4 **REVAND[3:0]**: metal fix version
0x0: No metal fix

Bits 3:0 **CMOD[3:0]**: Customer modified
0x0: No customer modifications

33.11.9 BPU CoreSight component identity register 0 (BPU_CIDR0)

Address offset: 0xFF0

Reset value: 0x0000 000D

31	30	29	28	27	26	25	24	23	22	21	20	19	18	17	16
Res.	Res.	Res.	Res.	Res.	Res.	Res.	Res.	Res.	Res.	Res.	Res.	Res.	Res.	Res.	Res.
15	14	13	12	11	10	9	8	7	6	5	4	3	2	1	0
Res.	Res.	Res.	Res.	Res.	Res.	Res.	Res.	PREAMBLE[7:0]							
								r	r	r	r	r	r	r	r

Bits 31:8 Reserved, must be kept at reset value.

Bits 7:0 **PREAMBLE[7:0]**: Component ID bits [7:0]
0x0D: Common ID value

33.11.10 BPU CoreSight peripheral identity register 1 (BPU_CIDR1)

Address offset: 0xFF4

Reset value: 0x0000 00E0

31	30	29	28	27	26	25	24	23	22	21	20	19	18	17	16
Res.	Res.	Res.	Res.	Res.	Res.	Res.	Res.	Res.	Res.	Res.	Res.	Res.	Res.	Res.	Res.
15	14	13	12	11	10	9	8	7	6	5	4	3	2	1	0
Res.	Res.	Res.	Res.	Res.	Res.	Res.	Res.	CLASS[3:0]				PREAMBLE[11:8]			
								r	r	r	r	r	r	r	r

Bit 31:8 Reserved, must be kept at reset value.

Bits 7:4 **CLASS[3:0]**: Component ID bits [15:12] - component class
0xE: Trace generator component

Bits 3:0 **PREAMBLE[11:8]**: Component ID bits [11:8]
0x0: Common ID value

33.11.11 BPU CoreSight component identity register 2 (BPU_CIDR2)

Address offset: 0xFF8

Reset value: 0x0000 0005

31	30	29	28	27	26	25	24	23	22	21	20	19	18	17	16
Res.	Res.	Res.	Res.	Res.	Res.	Res.	Res.	Res.	Res.	Res.	Res.	Res.	Res.	Res.	Res.
15	14	13	12	11	10	9	8	7	6	5	4	3	2	1	0
Res.	Res.	Res.	Res.	Res.	Res.	Res.	Res.	PREAMBLE[19:12]							
								r	r	r	r	r	r	r	r

Bits 31:8 Reserved, must be kept at reset value.

Bits 7:0 **PREAMBLE[19:12]**: Component ID bits [23:16]
0x05: Common ID value

33.11.12 BPU CoreSight component identity register 3 (BPU_CIDR3)

Address offset: 0xFFC

Reset value: 0x0000 00B1

31	30	29	28	27	26	25	24	23	22	21	20	19	18	17	16
Res.	Res.	Res.	Res.	Res.	Res.	Res.	Res.	Res.	Res.	Res.	Res.	Res.	Res.	Res.	Res.

15	14	13	12	11	10	9	8	7	6	5	4	3	2	1	0
Res.	Res.	Res.	Res.	Res.	Res.	Res.	Res.	PREAMBLE[27:20]							
								r	r	r	r	r	r	r	r

Bits 31:8 Reserved, must be kept at reset value.

Bits 7:0 **PREAMBLE[27:20]**: Component ID bits [31:24]
0xB1: Common ID value

33.11.13 CPU2 BPU register map and reset values

The CPU2 BPU registers are located at address range 0xE0002000 to 0xE0002FFC.

Table 224. CPU2 BPU register map and reset values

Offset	Register name	31	30	29	28	27	26	25	24	23	22	21	20	19	18	17	16	15	14	13	12	11	10	9	8	7	6	5	4	3	2	1	0
0x000	BPU_CTRLR	Res.	Res.	Res.	Res.	Res.	Res.	Res.	Res.	Res.	Res.	Res.	Res.	Res.	Res.	Res.	Res.	Res.	NUM_CODE[6:4]			NUM_LIT[3:0]				NUM_CODE[3:0]				Res.	Res.	KEY	ENABLE
	Reset value																		0	0	0	0	0	0	0	1	0	0	0			0	0
0x004	BPU_REMAPR	Res.	Res.	RMPSP	Res.	Res.	Res.	Res.	Res.	Res.	Res.	Res.	Res.	Res.	Res.	Res.	Res.	Res.	Res.	Res.	Res.	Res.	Res.	Res.	Res.	Res.	Res.	Res.	Res.	Res.	Res.	Res.	Res.
	Reset value			0																													
0x008 to 0x024	BPU_COMP0-7R	REPLACE[1:0]		Res.	COMP[26:0]																											Res.	ENABLE
	Reset value	0	0		0	0	0	0	0	0	0	0	0	0	0	0	0	0	0	0	0	0	0	0	0	0	0	0	0	0	0		0
0xFD0	BPU_PIDR4	Res.	Res.	Res.	Res.	Res.	Res.	Res.	Res.	Res.	Res.	Res.	Res.	Res.	Res.	Res.	Res.	Res.	Res.	Res.	Res.	Res.	Res.	Res.	Res.	4KCOUNT [3:0]				JEP106CON [3:0]			
	Reset value																									0	0	0	0	0	1	0	0
0xFE0	BPU_PIDR0	Res.	Res.	Res.	Res.	Res.	Res.	Res.	Res.	Res.	Res.	Res.	Res.	Res.	Res.	Res.	Res.	Res.	Res.	Res.	Res.	Res.	Res.	Res.	Res.	PARTNUM[7:0]							
	Reset value																									0	0	0	0	1	1	0	0
0xFE4	BPU_PIDR1	Res.	Res.	Res.	Res.	Res.	Res.	Res.	Res.	Res.	Res.	Res.	Res.	Res.	Res.	Res.	Res.	Res.	Res.	Res.	Res.	Res.	Res.	Res.	Res.	JEP106ID [3:0]				PARTNUM [11:8]			
	Reset value																									1	0	1	1	0	0	0	0
0xFE8	BPU_PIDR2	Res.	Res.	Res.	Res.	Res.	Res.	Res.	Res.	Res.	Res.	Res.	Res.	Res.	Res.	Res.	Res.	Res.	Res.	Res.	Res.	Res.	Res.	Res.	Res.	REVISION [3:0]				JEDEC	JEP106ID [6:4]		
	Reset value																									0	0	1	0	1	0	1	1
0xFEC	BPU_PIDR3	Res.	Res.	Res.	Res.	Res.	Res.	Res.	Res.	Res.	Res.	Res.	Res.	Res.	Res.	Res.	Res.	Res.	Res.	Res.	Res.	Res.	Res.	Res.	Res.	REVAND[3:0]				CMOD[3:0]			
	Reset value																									0	0	0	0	0	0	0	0
0xFF0	BPU_CIDR0	Res.	Res.	Res.	Res.	Res.	Res.	Res.	Res.	Res.	Res.	Res.	Res.	Res.	Res.	Res.	Res.	Res.	Res.	Res.	Res.	Res.	Res.	Res.	Res.	PREAMBLE[7:0]							
	Reset value																									0	0	0	0	1	1	0	1
0xFF4	BPU_CIDR1	Res.	Res.	Res.	Res.	Res.	Res.	Res.	Res.	Res.	Res.	Res.	Res.	Res.	Res.	Res.	Res.	Res.	Res.	Res.	Res.	Res.	Res.	Res.	Res.	CLASS[3:0]				PREAMBLE [11:8]			
	Reset value																									1	1	1	0	0	0	0	0
0xFF8	BPU_CIDR2	Res.	Res.	Res.	Res.	Res.	Res.	Res.	Res.	Res.	Res.	Res.	Res.	Res.	Res.	Res.	Res.	Res.	Res.	Res.	Res.	Res.	Res.	Res.	Res.	PREAMBLE[19:12]							
	Reset value																									0	0	0	0	0	1	0	1
0xFFC	BPU_CIDR3	Res.	Res.	Res.	Res.	Res.	Res.	Res.	Res.	Res.	Res.	Res.	Res.	Res.	Res.	Res.	Res.	Res.	Res.	Res.	Res.	Res.	Res.	Res.	Res.	PREAMBLE[27:20]							
	Reset value																									1	0	1	1	0	0	0	1

Refer to *Section 33.9: CPU2 ROM tables* for the register boundary addresses.

33.12 CPU2 cross trigger interface (CTI)

See *Section 33.6*.

33.13 CPU1 ROM table

The ROM table is a CoreSight™ component that contains the base addresses of all the Coresight™ debug components accessible via the AHB-AP. These tables allow a debugger to discover the topology of the CoreSight system automatically.

There is one ROM table in the CPU1 sub-system. This table is pointed to by the BASE register in the CPU1 AHB-AP. It contains the base address pointer for the System control space registers, which allows the debugger to identify the CPU core, as well as for the FPB, DWT, ITM and CTI.

The CPU1 ROM table (see *Table 225*) occupies a 4-Kbyte, 32-bit wide chunk of address space, from 0xE00FF000 to 0xE00FFFFC.

Table 225. CPU1 ROM table

Address in ROM table	Component name	Component base address	Component address offset	Size	Entry
0xE00FF000	SCS	0xE000E000	0xFFF0F000	4 KB	0xFFF0F003
0xE00FF004	DWT	0xE0001000	0xFFF02000	4 KB	0xFFF02003
0xE00FF008	FPB	0xE0002000	0xFFF03000	4 KB	0xFFF03003
0xE00FF00C	ITM	0xE0000000	0xFFF01000	4 KB	0xFFF01003
0xE00FF010	TPIU	0xE0040000	0xFFF41000	4 KB	0xFFF41003
0xE00FF014	Reserved	-	-	-	-
0xE00FF018	CTI	0xE0043000	0xFFF44000	4 KB	0xFFF44003
0xE00FF01C	Top of table	-	-	-	0x00000000
0xE00FF020 to 0xE00FFFC8	Reserved	-	-	-	0x00000000
0xE00FFFCC to 0xE00FFFFC	ROM table registers	-	-	-	See *Table 221*

The topology for the CoreSight™ components in the CPU1 subsystem is shown in *Figure 320*.

Figure 320. CPU1 CoreSight™ topology

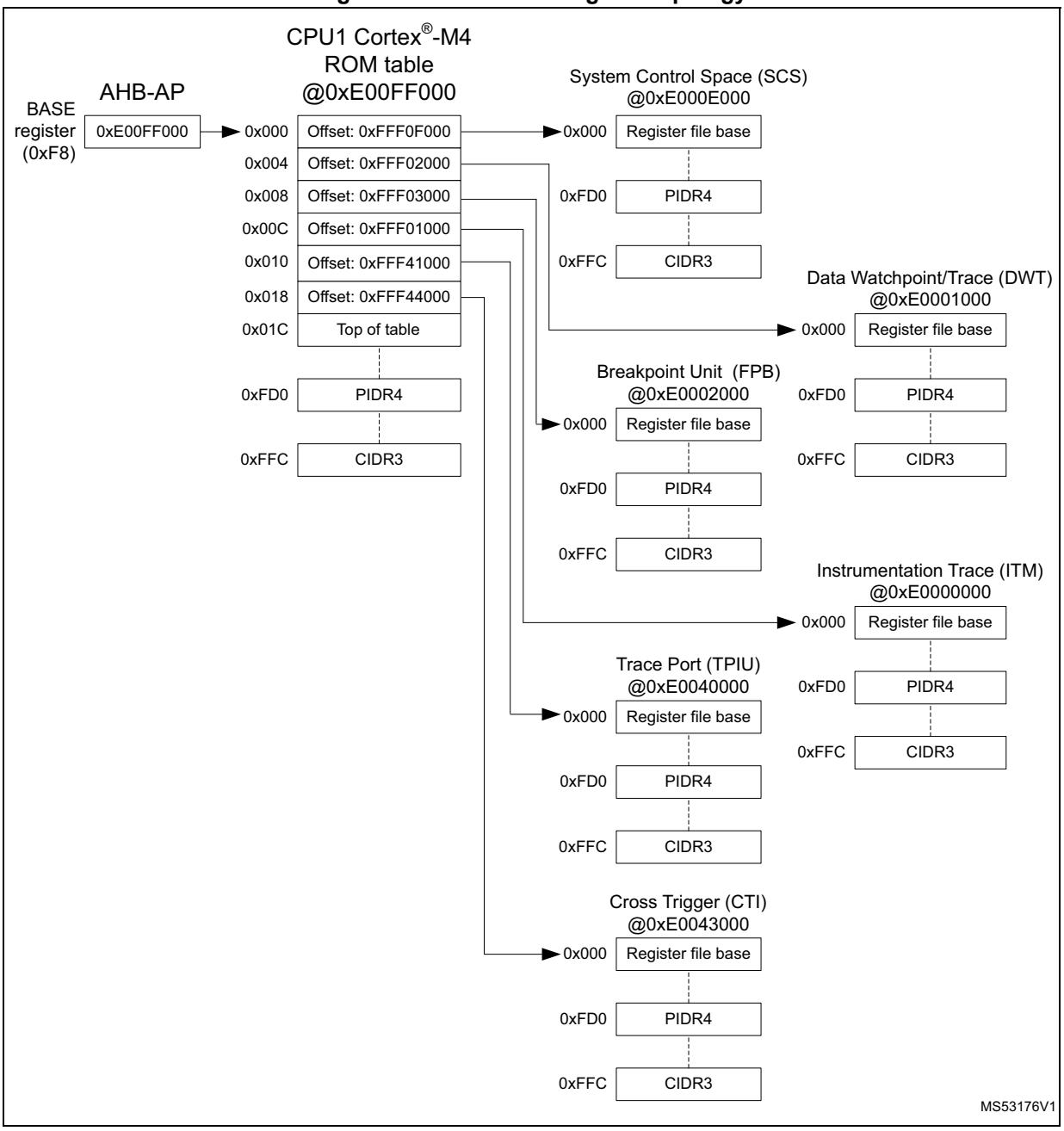

33.13.1 CPU1 ROM memory type register (C1ROM_MEMTYPER)

Address offset: 0xFCC

Reset value: 0x0000 0001

31	30	29	28	27	26	25	24	23	22	21	20	19	18	17	16
Res.	Res.	Res.	Res.	Res.	Res.	Res.	Res.	Res.	Res.	Res.	Res.	Res.	Res.	Res.	Res.

15	14	13	12	11	10	9	8	7	6	5	4	3	2	1	0
Res.	Res.	Res.	Res.	Res.	Res.	Res.	Res.	Res.	Res.	Res.	Res.	Res.	Res.	Res.	SYSMEM
															r

Bits 31:1 Reserved, must be kept at reset value.

Bit 0 **SYSMEM**: System memory
0x1: System memory is present on this bus

33.13.2 CPU1 ROM CoreSight peripheral identity register 4 (C1ROM_PIDR4)

Address offset: 0xFD0

Reset value: 0x0000 0000

31	30	29	28	27	26	25	24	23	22	21	20	19	18	17	16
Res.	Res.	Res.	Res.	Res.	Res.	Res.	Res.	Res.	Res.	Res.	Res.	Res.	Res.	Res.	Res.

15	14	13	12	11	10	9	8	7	6	5	4	3	2	1	0
Res.	Res.	Res.	Res.	Res.	Res.	Res.	Res.	4KCOUNT[3:0]				JEP106CON[3:0]			
								r	r	r	r	r	r	r	r

Bits 31:8 Reserved, must be kept at reset value.

Bits 7:4 **4KCOUNT[3:0]**: register file size
0x0: Register file occupies a single 4 KB region

Bits 3:0 **JEP106CON[3:0]**: JEP106 continuation code
0x0: STMicroelectronics JEDEC continuation code

33.13.3 CPU1 ROM CoreSight peripheral identity register 0 (C1ROM_PIDR0)

Address offset: 0xFE0

Reset value: 0x0000 0094

31	30	29	28	27	26	25	24	23	22	21	20	19	18	17	16
Res.	Res.	Res.	Res.	Res.	Res.	Res.	Res.	Res.	Res.	Res.	Res.	Res.	Res.	Res.	Res.

15	14	13	12	11	10	9	8	7	6	5	4	3	2	1	0
Res.	Res.	Res.	Res.	Res.	Res.	Res.	Res.	PARTNUM[7:0]							
								r	r	r	r	r	r	r	r

Bits 31:8 Reserved, must be kept at reset value.

Bits 7:0 **PARTNUM[7:0]**: Part number bits [7:0]
0x94: STM32WB15CC

33.13.4 CPU1 ROM CoreSight peripheral identity register 1 (C1ROM_PIDR1)

Address offset: 0xFE4

Reset value: 0x0000 0004

31	30	29	28	27	26	25	24	23	22	21	20	19	18	17	16
Res.	Res.	Res.	Res.	Res.	Res.	Res.	Res.	Res.	Res.	Res.	Res.	Res.	Res.	Res.	Res.

15	14	13	12	11	10	9	8	7	6	5	4	3	2	1	0
Res.	Res.	Res.	Res.	Res.	Res.	Res.	Res.	JEP106ID[3:0]				PARTNUM[11:8]			
								r	r	r	r	r	r	r	r

Bit 31:8 Reserved, must be kept at reset value.

Bits 7:4 **JEP106ID[3:0]**: JEP106 identity code bits [3:0]
0x0: STMicroelectronics JEDEC code

Bits 3:0 **PARTNUM[11:8]**: Part number bits [11:8]
0x4: STM32WB15CC

33.13.5 CPU1 ROM CoreSight peripheral identity register 2 (C1ROM_PIDR2)

Address offset: 0xFE8

Reset value: 0x0000 000A

31	30	29	28	27	26	25	24	23	22	21	20	19	18	17	16
Res.	Res.	Res.	Res.	Res.	Res.	Res.	Res.	Res.	Res.	Res.	Res.	Res.	Res.	Res.	Res.

15	14	13	12	11	10	9	8	7	6	5	4	3	2	1	0
Res.	Res.	Res.	Res.	Res.	Res.	Res.	Res.	REVISION[3:0]				JEDEC	JEP106ID[6:4]		
								r	r	r	r	r	r	r	r

Bit 31:8 Reserved, must be kept at reset value.

Bit s 7:4 **REVISION[3:0]**: Component revision number
0x0: rev r0p0

Bit 3 **JEDEC**: JEDEC assigned value
0x1: Designer ID specified by JEDEC

Bits 2:0 **JEP106ID[6:4]**: JEP106 identity code bits [6:4]
0x2: STMicroelectronics JEDEC code

33.13.6 CPU1 ROM CoreSight peripheral identity register 3 (C1ROM_PIDR3)

Address offset: 0xFEC

Reset value: 0x0000 0000

31	30	29	28	27	26	25	24	23	22	21	20	19	18	17	16
Res.	Res.	Res.	Res.	Res.	Res.	Res.	Res.	Res.	Res.	Res.	Res.	Res.	Res.	Res.	Res.

15	14	13	12	11	10	9	8	7	6	5	4	3	2	1	0
Res.	Res.	Res.	Res.	Res.	Res.	Res.	Res.	REVAND[3:0]				CMOD[3:0]			
								r	r	r	r	r	r	r	r

Bit 31:8 Reserved, must be kept at reset value.

Bits 7:4 **REVAND[3:0]**: metal fix version
0x0: No metal fix

Bits 3:0 **CMOD[3:0]**: Customer modified
0x0: No customer modifications

33.13.7 CPU1 ROM CoreSight component identity register 0 (C1ROM_CIDR0)

Address offset: 0xFF0

Reset value: 0x0000 000D

31	30	29	28	27	26	25	24	23	22	21	20	19	18	17	16
Res.	Res.	Res.	Res.	Res.	Res.	Res.	Res.	Res.	Res.	Res.	Res.	Res.	Res.	Res.	Res.

15	14	13	12	11	10	9	8	7	6	5	4	3	2	1	0
Res.	Res.	Res.	Res.	Res.	Res.	Res.	Res.	PREAMBLE[7:0]							
								r	r	r	r	r	r	r	r

Bits 31:8 Reserved, must be kept at reset value.

Bits 7:0 **PREAMBLE[7:0]**: Component ID bits [7:0]
0x0D: Common ID value

33.13.8 CPU1 ROM CoreSight peripheral identity register 1 (C1ROM_CIDR1)

Address offset: 0xFF4

Reset value: 0x0000 0010

31	30	29	28	27	26	25	24	23	22	21	20	19	18	17	16
Res.	Res.	Res.	Res.	Res.	Res.	Res.	Res.	Res.	Res.	Res.	Res.	Res.	Res.	Res.	Res.

15	14	13	12	11	10	9	8	7	6	5	4	3	2	1	0
Res.	Res.	Res.	Res.	Res.	Res.	Res.	Res.	CLASS[3:0]				PREAMBLE[11:8]			
								r	r	r	r	r	r	r	r

Bit 31:8 Reserved, must be kept at reset value.

Bits 7:4 **CLASS[3:0]**: Component ID bits [15:12] - component class
0x1: ROM table component

Bits 3:0 **PREAMBLE[11:8]**: Component ID bits [11:8]
0x0: Common ID value

33.13.9 CPU1 ROM CoreSight component identity register 2 (C1ROM_CIDR2)

Address offset: 0xFF8

Reset value: 0x0000 0005

31	30	29	28	27	26	25	24	23	22	21	20	19	18	17	16
Res.	Res.	Res.	Res.	Res.	Res.	Res.	Res.	Res.	Res.	Res.	Res.	Res.	Res.	Res.	Res.

15	14	13	12	11	10	9	8	7	6	5	4	3	2	1	0
Res.	Res.	Res.	Res.	Res.	Res.	Res.	Res.	PREAMBLE[19:12]							
								r	r	r	r	r	r	r	r

Bits 31:8 Reserved, must be kept at reset value.

Bits 7:0 **PREAMBLE[19:12]**: Component ID bits [23:16]
0x05: Common ID value

33.13.10 CPU1 ROM CoreSight component identity register 3 (C1ROM_CIDR3)

Address offset: 0xFFC

Reset value: 0x0000 00B1

31	30	29	28	27	26	25	24	23	22	21	20	19	18	17	16
Res.	Res.	Res.	Res.	Res.	Res.	Res.	Res.	Res.	Res.	Res.	Res.	Res.	Res.	Res.	Res.

15	14	13	12	11	10	9	8	7	6	5	4	3	2	1	0
Res.	Res.	Res.	Res.	Res.	Res.	Res.	Res.	PREAMBLE[27:20]							
								r	r	r	r	r	r	r	r

Bits 31:8 Reserved, must be kept at reset value.

Bits 7:0 **PREAMBLE[27:20]**: Component ID bits [31:24]
0xB1: Common ID value

33.13.11 CPU1 ROM table register map and reset values

Table 226. CPU1 ROM table register map and reset values

Offset	Register name	31	30	29	28	27	26	25	24	23	22	21	20	19	18	17	16	15	14	13	12	11	10	9	8	7	6	5	4	3	2	1	0
0xFCC	C1ROM_ MEMTYPER	Res.	Res.	Res.	Res.	Res.	Res.	Res.	Res.	Res.	Res.	Res.	Res.	Res.	Res.	Res.	Res.	Res.	Res.	Res.	Res.	Res.	Res.	Res.	Res.	Res.	Res.	Res.	Res.	Res.	Res.	Res.	SYSMEM
	Reset value																																1
0xFD0	C1ROM_PIDR4	Res.	Res.	Res.	Res.	Res.	Res.	Res.	Res.	Res.	Res.	Res.	Res.	Res.	Res.	Res.	Res.	Res.	Res.	Res.	Res.	Res.	Res.	Res.	Res.	4KCOUNT [3:0]				JEP106CON [3:0]			
	Reset value																									0	0	0	0	0	0	0	0
0xFE0	C1ROM_PIDR0	Res.	Res.	Res.	Res.	Res.	Res.	Res.	Res.	Res.	Res.	Res.	Res.	Res.	Res.	Res.	Res.	Res.	Res.	Res.	Res.	Res.	Res.	Res.	Res.	PARTNUM[7:0]							
	Reset value																									1	0	0	1	0	1	0	0
0xFE4	C1ROM_PIDR1	Res.	Res.	Res.	Res.	Res.	Res.	Res.	Res.	Res.	Res.	Res.	Res.	Res.	Res.	Res.	Res.	Res.	Res.	Res.	Res.	Res.	Res.	Res.	Res.	JEP106ID [3:0]				PARTNUM [11:8]			
	Reset value																									0	0	0	0	0	1	0	0
0xFE8	C1ROM_PIDR2	Res.	Res.	Res.	Res.	Res.	Res.	Res.	Res.	Res.	Res.	Res.	Res.	Res.	Res.	Res.	Res.	Res.	Res.	Res.	Res.	Res.	Res.	Res.	Res.	REVISION [3:0]				JEDEC	JEP106ID [6:4]		
	Reset value																									0	0	0	0	1	0	1	0
0xFEC	C1ROM_PIDR3	Res.	Res.	Res.	Res.	Res.	Res.	Res.	Res.	Res.	Res.	Res.	Res.	Res.	Res.	Res.	Res.	Res.	Res.	Res.	Res.	Res.	Res.	Res.	Res.	REVAND[3:0]				CMOD[3:0]			
	Reset value																									0	0	0	0	0	0	0	0
0xFF0	C1ROM_CIDR0	Res.	Res.	Res.	Res.	Res.	Res.	Res.	Res.	Res.	Res.	Res.	Res.	Res.	Res.	Res.	Res.	Res.	Res.	Res.	Res.	Res.	Res.	Res.	Res.	PREAMBLE[7:0]							
	Reset value																									0	0	0	0	1	1	0	1
0xFF4	C1ROM_CIDR1	Res.	Res.	Res.	Res.	Res.	Res.	Res.	Res.	Res.	Res.	Res.	Res.	Res.	Res.	Res.	Res.	Res.	Res.	Res.	Res.	Res.	Res.	Res.	Res.	CLASS[3:0]				PREAMBLE [11:8]			
	Reset value																									0	0	0	1	0	0	0	0
0xFF8	C1ROM_CIDR2	Res.	Res.	Res.	Res.	Res.	Res.	Res.	Res.	Res.	Res.	Res.	Res.	Res.	Res.	Res.	Res.	Res.	Res.	Res.	Res.	Res.	Res.	Res.	Res.	PREAMBLE[19:12]							
	Reset value																									0	0	0	0	0	1	0	1
0xFFC	C1ROM_CIDR3	Res.	Res.	Res.	Res.	Res.	Res.	Res.	Res.	Res.	Res.	Res.	Res.	Res.	Res.	Res.	Res.	Res.	Res.	Res.	Res.	Res.	Res.	Res.	Res.	PREAMBLE[27:20]							
	Reset value																									1	0	1	1	0	0	0	1

Refer to *Section 33.13: CPU1 ROM table* for the register boundary addresses.

33.14 CPU1 data watchpoint and trace unit (DWT)

The DWT provides four comparators that can be used as:

- Watchpoint
- ETM trigger
- PC sampling trigger
- Data address sampling trigger
- Data comparator (comparator 1 only)
- Clock cycle counter comparator (comparator 0 only)

It also contains counters for:

- Clock cycles
- Folded instructions
- Load store unit (LSU) operations
- Sleep cycles
- Number of cycles per instruction
- Interrupt overhead

A DWT comparator compares the value held in its DWT_COMPR register with one of the following:

- a data address
- an instruction address
- a data value
- the cycle count value, for comparator 0 only.

For address matching, the comparator can use a mask, so it matches a range of addresses.

On a successful match, the comparator generates one of the following:

- One or more DWT Data trace packets, containing one or more of:
  - the address of the instruction that caused a data access
  - an address offset, bits[15:0] of the data access address
  - the matched data value.
- A watchpoint debug event, on either the PC value or the accessed data address.
- A CMPMATCH[N] event, that signals the match outside the DWT unit.

A watchpoint debug event either generates a DebugMonitor exception, or causes the processor to halt execution and enter Debug state.

For more details on how to use the DWT, refer to the Arm®v7-M Architecture Reference Manual *[5]*.

33.14.1 DWT control register (DWT_CTRLR)

Address offset: 0x000

Reset value: 0x4000 0000

31	30	29	28	27	26	25	24	23	22	21	20	19	18	17	16
NUMCOMP[3:0].				NOTRCPKT	NOEXTTRIG	NOCYCCNT	NOPRFCNT	Res.	CYCEVTENA	FOLDEVTENA	LSUEVTENA	SLEEPEVTENA	EXCEVTENA	CPIEVTENA	EXCTRCENA
r	r	r	r	r	r	r	r		rw	rw	rw	rw	rw	rw	rw
15	14	13	12	11	10	9	8	7	6	5	4	3	2	1	0
Res.	Res.	Res.	PCSAMPLENA	SYNCTAP[1:0]		CYCTAP	POSTINIT[3:0]				POSTRESET[3:0]				CYCCNTENA
			rw	rw	rw	rw	rw	rw	rw	rw	rw	rw	rw	rw	rw

Bits 31:28 **NUMCOMP[3:0]**: Number of comparators implemented (read only)
0x4: Four comparators

Bit 27 **NOTRCPKT**: Trace sampling and exception tracing support (read only)
0x0: Supported

Bit 26 **NOEXTTRIG**: External match signal, CMPMATCH support (read only)
0x0: Supported

Bit 25 **NOCYCCNT**: Cycle counter support (read only)
0x0: Supported

Bit 24 **NOPRFCNT**: Profiling counter support (read only)
0x0: Supported

Bit 23 Reserved, must be kept at reset value.

Bit 22 **CYCEVTENA**: Enable for POSTCNT underflow event counter packet generation
0x0: Disabled
0x1: Enabled

Bit 21 **FOLDEVTENA**: Enable for folded instruction counter overflow event generation
0x0: Disabled
0x1: Enabled

Bit 20 **LSUEVTENA**: Enable for LSU counter overflow event generation
0x0: Disabled
0x1: Enabled

Bit 19 **SLEEPEVTENA**: Enable for sleep counter overflow event generation
0x0: Disabled
0x1: Enabled

Bit 18 **EXCEVTENA**: Enable for exception overhead counter overflow event generation
0x0: Disabled
0x1: Enabled

Bit 17 **CPIEVTENA**: Enable for CPI counter overflow event generation
0x0: Disabled
0x1: Enabled

Bit 16 **EXCTRCENA**: Enable for exception trace generation
0x0: Disabled
0x1: Enabled

Bits 15:13 Reserved, must be kept at reset value.

Bit 12 **PCSAMPLENA**: Enables use of POSTCNT counter as a timer for Periodic PC sample packet generation.

0x0: Disabled
0x1: Enabled

Bits 11:10 **SYNCTAP[1:0]**: Selects the position of the synchronization packet counter tap on the CYCCNT counter. This determines the synchronization packet rate.

0x0: Disabled. No synchronization packets
0x1: Tap at CYCCNT[24]
0x2: Tap at CYCCNT[26]
0x3: Tap at CYCCNT[28]

Bit 9 **CYCTAP**: Selects the position of the POSTCNT tap on the CYCCNT counter.

0x0: Tap at CYCCNT[6]
0x1: Tap at CYCCNT[10]

Bits 8:5 **POSTINIT[3:0]**: Initial value of the POSTCNT counter. Writes to this field are ignored if POSTCNT counter is enabled (ie. CYCEVTENA or PCSAMPLENA must be reset prior to writing POSTINIT).

Bits 4:1 **POSTPRESET[3:0]**: Reload value of the POSTCNT counter.

Bit 0 **CYCCNTENA**: Enables CYCCNT counter.

0x0: Disabled
0x1: Enabled

33.14.2 DWT cycle count register (DWT_CYCCNTR)

Address offset: 0x004

Reset value: 0x0000 0000

31	30	29	28	27	26	25	24	23	22	21	20	19	18	17	16
CYCCNT[31:16]															
r	r	r	r	r	r	r	r	r	r	r	r	r	r	r	r
15	14	13	12	11	10	9	8	7	6	5	4	3	2	1	0
CYCCNT[15:0]															
r	r	r	r	r	r	r	r	r	r	r	r	r	r	r	r

Bits 31:0 **CYCCNT[31:0]**: Processor clock cycle counter

33.14.3 DWT CPI count register (DWT_CPICNTR)

Address offset: 0x008

Reset value: 0x0000 0000

31	30	29	28	27	26	25	24	23	22	21	20	19	18	17	16
Res.	Res.	Res.	Res.	Res.	Res.	Res.	Res.	Res.	Res.	Res.	Res.	Res.	Res.	Res.	Res.
15	14	13	12	11	10	9	8	7	6	5	4	3	2	1	0
Res.	Res.	Res.	Res.	Res.	Res.	Res.	Res.	CPICNT[7:0]							
								rw	rw	rw	rw	rw	rw	rw	rw

Bits 31:8 Reserved, must be kept at reset value.

Bits 7:0 **CPICNT[7:0]**: CPI counter. Counts additional cycles required to execute multi-cycle instructions, except those recorded by DWT_LSUCNTR, and counts any instruction fetch stalls.

33.14.4 DWT exception count register (DWT_EXCCNTR)

Address offset: 0x00C

Reset value: 0x0000 0000

31	30	29	28	27	26	25	24	23	22	21	20	19	18	17	16
Res.	Res.	Res.	Res.	Res.	Res.	Res.	Res.	Res.	Res.	Res.	Res.	Res.	Res.	Res.	Res.
15	14	13	12	11	10	9	8	7	6	5	4	3	2	1	0
Res.	Res.	Res.	Res.	Res.	Res.	Res.	Res.	EXCCNT[7:0]							
								rw	rw	rw	rw	rw	rw	rw	rw

Bits 31:8 Reserved, must be kept at reset value.

Bits 7:0 **EXCCNT[7:0]**: Exception overhead cycle counter. Counts the number of cycles spent in exception processing.

33.14.5 DWT sleep count register (DWT_SLPCNTR)

Address offset: 0x010

Reset value: 0x0000 0000

31	30	29	28	27	26	25	24	23	22	21	20	19	18	17	16
Res.	Res.	Res.	Res.	Res.	Res.	Res.	Res.	Res.	Res.	Res.	Res.	Res.	Res.	Res.	Res.
15	14	13	12	11	10	9	8	7	6	5	4	3	2	1	0
Res.	Res.	Res.	Res.	Res.	Res.	Res.	Res.	SLEEPCNT[7:0]							
								rw	rw	rw	rw	rw	rw	rw	rw

Bits 31:8 Reserved, must be kept at reset value.

Bits 7:0 **SLEEPCNT[7:0]**: Sleep cycle counter. Counts the number of cycles spent in sleep mode (WFI, WFE, sleep-on-exit).

33.14.6 DWT LSU count register (DWT_LSUCNTR)

Address offset: 0x014

Reset value: 0x0000 0000

31	30	29	28	27	26	25	24	23	22	21	20	19	18	17	16
Res.	Res.	Res.	Res.	Res.	Res.	Res.	Res.	Res.	Res.	Res.	Res.	Res.	Res.	Res.	Res.

15	14	13	12	11	10	9	8	7	6	5	4	3	2	1	0
Res.	Res.	Res.	Res.	Res.	Res.	Res.	Res.	LSUCNT[7:0]							
								rw	rw	rw	rw	rw	rw	rw	rw

Bits 31:8 Reserved, must be kept at reset value.

Bits 7:0 **LSUCNT[7:0]**: Load store counter. Counts additional cycles required to execute load and store instructions.

33.14.7 DWT fold count register (DWT_FOLDCNTR)

Address offset: 0x018

Reset value: 0x0000 0000

31	30	29	28	27	26	25	24	23	22	21	20	19	18	17	16
Res.	Res.	Res.	Res.	Res.	Res.	Res.	Res.	Res.	Res.	Res.	Res.	Res.	Res.	Res.	Res.

15	14	13	12	11	10	9	8	7	6	5	4	3	2	1	0
Res.	Res.	Res.	Res.	Res.	Res.	Res.	Res.	FOLDCNT[7:0]							
								rw	rw	rw	rw	rw	rw	rw	rw

Bits 31:8 Reserved, must be kept at reset value.

Bits 7:0 **FOLDCNT[7:0]**: Folded instruction counter. Increments on each instruction that takes 0 cycles.

33.14.8 DWT program counter sample register (DWT_PCSR)

Address offset: 0x01C

Reset value: 0x0000 0000

31	30	29	28	27	26	25	24	23	22	21	20	19	18	17	16
EIASAMPLE[31:16]															
r	r	r	r	r	r	r	r	r	r	r	r	r	r	r	r

15	14	13	12	11	10	9	8	7	6	5	4	3	2	1	0
EIASAMPLE[15:0]															
r	r	r	r	r	r	r	r	r	r	r	r	r	r	r	r

Bits 31:0 **EIASAMPLE[31:0]**: Executed instruction address sample value. Samples the current value of the program counter.

33.14.9 DWT comparator register x (DWT_COMPxR)

Address offset: 0x020 + x * 0x10 (for x = 0 to 3)

Reset value: 0x0000 0000

31	30	29	28	27	26	25	24	23	22	21	20	19	18	17	16
COMP[31:16]															
r	r	r	r	r	r	r	r	r	r	r	r	r	r	r	r
15	14	13	12	11	10	9	8	7	6	5	4	3	2	1	0
COMP[15:0]															
r	r	r	r	r	r	r	r	r	r	r	r	r	r	r	r

Bits 31:0 **COMP[31:0]**: Reference value for comparison.

33.14.10 DWT mask register x (DWT_MASKxR)

Address offset: 0x024 + x * 0x10 (for x = 0 to 3)

Reset value: 0x0000 0000

31	30	29	28	27	26	25	24	23	22	21	20	19	18	17	16
Res.	Res.	Res.	Res.	Res.	Res.	Res.	Res.	Res.	Res.	Res.	Res.	Res.	Res.	Res.	Res.
15	14	13	12	11	10	9	8	7	6	5	4	3	2	1	0
Res.	Res.	Res.	Res.	Res.	Res.	Res.	Res.	Res.	Res.	Res.	MASK[4:0]				
											rw	rw	rw	rw	rw

Bits 31:5 Reserved, must be kept at reset value.

Bits 4:0 **MASK[4:0]**: Comparator mask size. Provides the size of the ignore mask applied to the access address for address range matching by comparator n. A debugger can write 0b11111 to this field and then read the register back to determine the maximum mask size supported.

33.14.11 DWT function register x (DWT_FUNCTxR)

Address offset: 0x028 + x * 0x10 (for x = 0 to 3)

Reset value: 0x0000 0000

31	30	29	28	27	26	25	24	23	22	21	20	19	18	17	16
Res.	Res.	Res.	Res.	Res.	Res.	Res.	Res.	Res.	Res.	Res.	Res.	DATAVADDR1[3:0]			
												rw	rw	rw	rw

15	14	13	12	11	10	9	8	7	6	5	4	3	2	1	0
DATAVADDR0[3:0]				DATAVSIZE[1:0]		LINK1 ENA	DATAV MATCH	CYC MATCH	Res.	EMIT RANGE	Res.	FUNCTION[3:0]			
rw	rw	rw	rw	rw	rw	rw	rw	rw		rw		rw	rw	rw	rw

Bits 31:25 Reserved, must be kept at reset value.

Bit 24 **MATCHED**: Comparator match (read only). Indicates if a comparator match has occurred since the register was last read.

0: No match
1: Match occurred

Bits 23:20 Reserved, must be kept at reset value.

Bits 19:16 **DATAVADDR1[3:0]**: When the DATAVMATCH and LNK1ENA bits are both 1, this field can hold the comparator number of a second comparator to use for linked address comparison.

Bits 15:12 **DATAVADDR0[3:0]**: When the DATAVMATCH and LNK1ENA bits are both 1, this field can hold the comparator number of a comparator to use for linked address comparison.

Bits 11:10 **DATAVSIZE[1:0]**: For data value matching, specifies the size of the required data comparison.

0x0: Byte
0x1: Half word
0x2: Word
0x3: Reserved

Bit 9 **LNK1ENA**: Indicates whether use of a second linked comparator is supported (read only).

0x1: Supported

Bit 8 **DATAVMATCH**: Enables cycle comparison.

0x0: Perform address comparison
0x1: Perform data value comparison

Bit 7 **CYCMATCH**: Enables cycle count comparison on comparator 0. This field is reserved for other comparators.

0x0: No cycle count comparison
0x1: Compare DWT_COMP0R with the cycle counter, DWT_CYCCNTR

Bit 6 Reserved, must be kept at reset value.

Bit 5 **EMITRANGE**: Enables generation of data trace address offset packets (containing data address bits 0 to 15)

0x0: Disabled
0x1: Enabled

Bit 4 Reserved, must be kept at reset value.

Bits 3:0 **FUNCTION[3:0]**: Selects action to take on comparator match. The meaning of this bit field depends on the setting of the DATAVMATCH and CYCMATCH fields. See *[5]*.

33.14.12 DWT CoreSight peripheral identity register 4 (DWT_PIDR4)

Address offset: 0xFD0

Reset value: 0x0000 0004

31	30	29	28	27	26	25	24	23	22	21	20	19	18	17	16
Res.	Res.	Res.	Res.	Res.	Res.	Res.	Res.	Res.	Res.	Res.	Res.	Res.	Res.	Res.	Res.

15	14	13	12	11	10	9	8	7	6	5	4	3	2	1	0
Res.	Res.	Res.	Res.	Res.	Res.	Res.	Res.	4KCOUNT[3:0]				JEP106CON[3:0]			
								r	r	r	r	r	r	r	r

Bits 31:8 Reserved, must be kept at reset value.

Bits 7:4 **4KCOUNT[3:0]**: register file size
0x0: Register file occupies a single 4 KB region

Bits 3:0 **JEP106CON[3:0]**: JEP106 continuation code
0x4: Arm® JEDEC code

33.14.13 DWT CoreSight peripheral identity register 0 (DWT_PIDR0)

Address offset: 0xFE0

Reset value: 0x0000 0002

31	30	29	28	27	26	25	24	23	22	21	20	19	18	17	16
Res.	Res.	Res.	Res.	Res.	Res.	Res.	Res.	Res.	Res.	Res.	Res.	Res.	Res.	Res.	Res.

15	14	13	12	11	10	9	8	7	6	5	4	3	2	1	0
Res.	Res.	Res.	Res.	Res.	Res.	Res.	Res.	PARTNUM[7:0]							
								r	r	r	r	r	r	r	r

Bits 31:8 Reserved, must be kept at reset value.

Bits 7:0 **PARTNUM[7:0]**: Part number bits [7:0]
0x02: DWT part number

33.14.14 DWT CoreSight peripheral identity register 1 (DWT_PIDR1)

Address offset: 0xFE4

Reset value: 0x0000 00B9

31	30	29	28	27	26	25	24	23	22	21	20	19	18	17	16
Res.	Res.	Res.	Res.	Res.	Res.	Res.	Res.	Res.	Res.	Res.	Res.	Res.	Res.	Res.	Res.

15	14	13	12	11	10	9	8	7	6	5	4	3	2	1	0
Res.	Res.	Res.	Res.	Res.	Res.	Res.	Res.	JEP106ID[3:0]				PARTNUM[11:8]			
								r	r	r	r	r	r	r	r

Bit 31:8 Reserved, must be kept at reset value.

Bits 7:4 **JEP106ID[3:0]**: JEP106 identity code bits [3:0]
0xB: Arm® JEDEC code

Bits 3:0 **PARTNUM[11:8]**: Part number bits [11:8]
0x9: DWT part number

33.14.15 DWT CoreSight peripheral identity register 2 (DWT_PIDR2)

Address offset: 0xFE8

Reset value: 0x0000 003B

31	30	29	28	27	26	25	24	23	22	21	20	19	18	17	16
Res.	Res.	Res.	Res.	Res.	Res.	Res.	Res.	Res.	Res.	Res.	Res.	Res.	Res.	Res.	Res.

15	14	13	12	11	10	9	8	7	6	5	4	3	2	1	0
Res.	Res.	Res.	Res.	Res.	Res.	Res.	Res.	REVISION[3:0]				JEDEC	JEP106ID[6:4]		
								r	r	r	r	r	r	r	r

Bit 31:8 Reserved, must be kept at reset value.

Bit s 7:4 **REVISION[3:0]**: Component revision number
0x3: r0p4

Bit 3 **JEDEC**: JEDEC assigned value
0x1: Designer ID specified by JEDEC

Bits 2:0 **JEP106ID[6:4]**: JEP106 identity code bits [6:4]
0x3: Arm® JEDEC code

33.14.16 DWT CoreSight peripheral identity register 3 (DWT_PIDR3)

Address offset: 0xFEC

Reset value: 0x0000 0000

31	30	29	28	27	26	25	24	23	22	21	20	19	18	17	16
Res.	Res.	Res.	Res.	Res.	Res.	Res.	Res.	Res.	Res.	Res.	Res.	Res.	Res.	Res.	Res.

15	14	13	12	11	10	9	8	7	6	5	4	3	2	1	0
Res.	Res.	Res.	Res.	Res.	Res.	Res.	Res.	REVAND[3:0]				CMOD[3:0]			
								r	r	r	r	r	r	r	r

Bit 31:8 Reserved, must be kept at reset value.

Bits 7:4 **REVAND[3:0]**: metal fix version
0x0: No metal fix

Bits 3:0 **CMOD[3:0]**: Customer modified
0x0: No customer modifications

33.14.17 DWT CoreSight component identity register 0 (DWT_CIDR0)

Address offset: 0xFF0

Reset value: 0x0000 000D

31	30	29	28	27	26	25	24	23	22	21	20	19	18	17	16
Res.	Res.	Res.	Res.	Res.	Res.	Res.	Res.	Res.	Res.	Res.	Res.	Res.	Res.	Res.	Res.

15	14	13	12	11	10	9	8	7	6	5	4	3	2	1	0
Res.	Res.	Res.	Res.	Res.	Res.	Res.	Res.	PREAMBLE[7:0]							
								r	r	r	r	r	r	r	r

Bits 31:8 Reserved, must be kept at reset value.

Bits 7:0 **PREAMBLE[7:0]**: Component ID bits [7:0]
0x0D: Common ID value

33.14.18 DWT CoreSight peripheral identity register 1 (DWT_CIDR1)

Address offset: 0xFF4

Reset value: 0x0000 00E0

31	30	29	28	27	26	25	24	23	22	21	20	19	18	17	16
Res.	Res.	Res.	Res.	Res.	Res.	Res.	Res.	Res.	Res.	Res.	Res.	Res.	Res.	Res.	Res.

15	14	13	12	11	10	9	8	7	6	5	4	3	2	1	0
Res.	Res.	Res.	Res.	Res.	Res.	Res.	Res.	CLASS[3:0]				PREAMBLE[11:8]			
								r	r	r	r	r	r	r	r

Bit 31:8 Reserved, must be kept at reset value.

Bits 7:4 **CLASS[3:0]**: Component ID bits [15:12] - component class
0xE: Trace generator component

Bits 3:0 **PREAMBLE[11:8]**: Component ID bits [11:8]
0x0: Common ID value

33.14.19 DWT CoreSight component identity register 2 (DWT_CIDR2)

Address offset: 0xFF8

Reset value: 0x0000 0005

31	30	29	28	27	26	25	24	23	22	21	20	19	18	17	16
Res.	Res.	Res.	Res.	Res.	Res.	Res.	Res.	Res.	Res.	Res.	Res.	Res.	Res.	Res.	Res.

15	14	13	12	11	10	9	8	7	6	5	4	3	2	1	0
Res.	Res.	Res.	Res.	Res.	Res.	Res.	Res.	PREAMBLE[19:12]							
								r	r	r	r	r	r	r	r

Bits 31:8 Reserved, must be kept at reset value.

Bits 7:0 **PREAMBLE[19:12]**: Component ID bits [23:16]
0x05: Common ID value

33.14.20 DWT CoreSight component identity register 3 (DWT_CIDR3)

Address offset: 0xFFC

Reset value: 0x0000 00B1

31	30	29	28	27	26	25	24	23	22	21	20	19	18	17	16
Res.	Res.	Res.	Res.	Res.	Res.	Res.	Res.	Res.	Res.	Res.	Res.	Res.	Res.	Res.	Res.

15	14	13	12	11	10	9	8	7	6	5	4	3	2	1	0
Res.	Res.	Res.	Res.	Res.	Res.	Res.	Res.	PREAMBLE[27:20]							
								r	r	r	r	r	r	r	r

Bits 31:8 Reserved, must be kept at reset value.

Bits 7:0 **PREAMBLE[27:20]**: Component ID bits [31:24]
0xB1: Common ID value

33.14.21 CPU1 DWT register map and reset values

The CPU1 DWT registers are located at address range 0xE0001000 to 0xE0001FFC.

Table 227. CPU1 DWT register map and reset values

Offset	Register name	31	30	29	28	27	26	25	24	23	22	21	20	19	18	17	16	15	14	13	12	11	10	9	8	7	6	5	4	3	2	1	0
0x000	DWT_CTRLR	NUMCOMP [3:0]				NOTRCPKT	NOEXTTRIG	NOCYCCNT	NOPRFCNT	Res.	CYCEVTENA	FOLDEVTENA	LSUEVTENA	SLEEPEVTENA	EXCEVTENA	CPIEVTENA	EXCTRCENA	Res.	Res.	Res.	PCSAMPLENA	SYNCTAP [1:0]		CYCTAP	POSINIT[3:0]				POSTPRESET[3:0]			CYCCNTENA
	Reset value	0	1	0	0	0	0	0	0		0	0	0	0	0	0	0				0	0	0	0	0	0	0	0	0	0	0	0	0
0x004	DWT_CYCCNTR	CYCCNT[31:0]																															
	Reset value	0	0	0	0	0	0	0	0	0	0	0	0	0	0	0	0	0	0	0	0	0	0	0	0	0	0	0	0	0	0	0	0
0x008	DWT_CPICNTR	Res.	Res.	Res.	Res.	Res.	Res.	Res.	Res.	Res.	Res.	Res.	Res.	Res.	Res.	Res.	Res.	Res.	Res.	Res.	Res.	Res.	Res.	Res.	Res.	CPICNT[7:0]							
	Reset value																									0	0	0	0	0	0	0	0
0x00C	DWT_EXCCNTR	Res.	Res.	Res.	Res.	Res.	Res.	Res.	Res.	Res.	Res.	Res.	Res.	Res.	Res.	Res.	Res.	Res.	Res.	Res.	Res.	Res.	Res.	Res.	Res.	EXCCNT[7:0]							
	Reset value																									0	0	0	0	0	0	0	0
0x010	DWT_SLPCNTR	Res.	Res.	Res.	Res.	Res.	Res.	Res.	Res.	Res.	Res.	Res.	Res.	Res.	Res.	Res.	Res.	Res.	Res.	Res.	Res.	Res.	Res.	Res.	Res.	SLEEPCNT[7:0]							
	Reset value																									0	0	0	0	0	0	0	0
0x014	DWT_LSUCNTR	Res.	Res.	Res.	Res.	Res.	Res.	Res.	Res.	Res.	Res.	Res.	Res.	Res.	Res.	Res.	Res.	Res.	Res.	Res.	Res.	Res.	Res.	Res.	Res.	LSUCNT[7:0]							
	Reset value																									0	0	0	0	0	0	0	0
0x018	DWT_FOLDCNTR	Res.	Res.	Res.	Res.	Res.	Res.	Res.	Res.	Res.	Res.	Res.	Res.	Res.	Res.	Res.	Res.	Res.	Res.	Res.	Res.	Res.	Res.	Res.	Res.	FOLDCNT[7:0]							
	Reset value																									0	0	0	0	0	0	0	0
0x01C	DWT_PCSR	EIASAMPLE[31:0]																															
	Reset value	0	0	0	0	0	0	0	0	0	0	0	0	0	0	0	0	0	0	0	0	0	0	0	0	0	0	0	0	0	0	0	0
0x020	DWT_COMP0R	COMP[31:0]																															
	Reset value	0	0	0	0	0	0	0	0	0	0	0	0	0	0	0	0	0	0	0	0	0	0	0	0	0	0	0	0	0	0	0	0
0x024	DWT_MASK0R	Res.	Res.	Res.	Res.	Res.	Res.	Res.	Res.	Res.	Res.	Res.	Res.	Res.	Res.	Res.	Res.	Res.	Res.	Res.	Res.	Res.	Res.	Res.	Res.	Res.	Res.	Res.	MASK[4:0]				
	Reset value																												0	0	0	0	0
0x028	DWT_FUNCT0R	Res.	Res.	Res.	Res.	Res.	Res.	Res.	MATCHED	Res.	Res.	Res.	Res.	DATAVADDR1 [3:0]				DATAVADDR0 [3:0]				DATAVSIZE [1:0]		LNK1ENA	DATAVMATCH	CYCMATCH	Res.	EMITRANGE	Res.	FUNCTION [3:0]			
	Reset value								0					0	0	0	0	0	0	0	0	0	0	0	0	0		0		0	0	0	0
0x030	DWT_COMP1R	COMP[31:0]																															
	Reset value	0	0	0	0	0	0	0	0	0	0	0	0	0	0	0	0	0	0	0	0	0	0	0	0	0	0	0	0	0	0	0	0
0x034	DWT_MASK1R	Res.	Res.	Res.	Res.	Res.	Res.	Res.	Res.	Res.	Res.	Res.	Res.	Res.	Res.	Res.	Res.	Res.	Res.	Res.	Res.	Res.	Res.	Res.	Res.	Res.	Res.	Res.	MASK[4:0]				
	Reset value																												0	0	0	0	0
0x038	DWT_FUNCT1R	Res.	Res.	Res.	Res.	Res.	Res.	Res.	MATCHED	Res.	Res.	Res.	Res.	DATAVADDR1 [3:0]				DATAVADDR0 [3:0]				DATAVSIZE [1:0]		LNK1ENA	DATAVMATCH	CYCMATCH	Res.	EMITRANGE	Res.	FUNCTION [3:0]			
	Reset value								0					0	0	0	0	0	0	0	0	0	0	0	0	0		0		0	0	0	0

Table 227. CPU1 DWT register map and reset values (continued)

Offset	Register name	31	30	29	28	27	26	25	24	23	22	21	20	19	18	17	16	15	14	13	12	11	10	9	8	7	6	5	4	3	2	1	0
0x040	DWT_COMP2R	COMP[31:0]																															
	Reset value	0	0	0	0	0	0	0	0	0	0	0	0	0	0	0	0	0	0	0	0	0	0	0	0	0	0	0	0	0	0	0	0
0x044	DWT_MASK2R	Res.	Res.	Res.	Res.	Res.	Res.	Res.	Res.	Res.	Res.	Res.	Res.	Res.	Res.	Res.	Res.	Res.	Res.	Res.	Res.	Res.	Res.	Res.	Res.	Res.	Res.	Res.	MASK[4:0]				
	Reset value																												0	0	0	0	0
0x048	DWT_FUNCT2R	Res.	Res.	Res.	Res.	Res.	Res.	Res.	MATCHED	Res.	Res.	Res.	Res.	DATAVADDR1[3:0]				DATAVADDR0[3:0]				DATAVSIZE[1:0]		LNK1ENA	DATAVMATCH	CYCMATCH	Res.	EMITRANGE	Res.	FUNCTION[3:0]			
	Reset value								0					0	0	0	0	0	0	0	0	0	0	0	0	0		0		0	0	0	0
0x050	DWT_COMP3R	COMP[31:0]																															
	Reset value	0	0	0	0	0	0	0	0	0	0	0	0	0	0	0	0	0	0	0	0	0	0	0	0	0	0	0	0	0	0	0	0
0x054	DWT_MASK3R	Res.	Res.	Res.	Res.	Res.	Res.	Res.	Res.	Res.	Res.	Res.	Res.	Res.	Res.	Res.	Res.	Res.	Res.	Res.	Res.	Res.	Res.	Res.	Res.	Res.	Res.	Res.	MASK[4:0]				
	Reset value																												0	0	0	0	0
0x058	DWT_FUNCT3R	Res.	Res.	Res.	Res.	Res.	Res.	Res.	MATCHED	Res.	Res.	Res.	Res.	DATAVADDR1 [3:0]				DATAVADDR0 [3:0]				DATAVSIZE [1:0]		LNK1ENA	DATAVMATCH	CYCMATCH	Res.	EMITRANGE	Res.	FUNCTION [3:0]			
	Reset value								0					0	0	0	0	0	0	0	0	0	0	0	0	0		0		0	0	0	0
0xFD0	DWT_PIDR4	Res.	Res.	Res.	Res.	Res.	Res.	Res.	Res.	Res.	Res.	Res.	Res.	Res.	Res.	Res.	Res.	Res.	Res.	Res.	Res.	Res.	Res.	Res.	Res.	4KCOUNT [3:0]				JEP106CON [3:0]			
	Reset value																									0	0	0	0	0	1	0	0
0xFE0	DWT_PIDR0	Res.	Res.	Res.	Res.	Res.	Res.	Res.	Res.	Res.	Res.	Res.	Res.	Res.	Res.	Res.	Res.	Res.	Res.	Res.	Res.	Res.	Res.	Res.	Res.	PARTNUM[7:0]							
	Reset value																									0	0	0	0	0	0	1	0
0xFE4	DWT_PIDR1	Res.	Res.	Res.	Res.	Res.	Res.	Res.	Res.	Res.	Res.	Res.	Res.	Res.	Res.	Res.	Res.	Res.	Res.	Res.	Res.	Res.	Res.	Res.	Res.	JEP106ID [3:0]				PARTNUM [11:8]			
	Reset value																									1	0	1	1	0	0	0	0
0xFE8	DWT_PIDR2	Res.	Res.	Res.	Res.	Res.	Res.	Res.	Res.	Res.	Res.	Res.	Res.	Res.	Res.	Res.	Res.	Res.	Res.	Res.	Res.	Res.	Res.	Res.	Res.	REVISION [3:0]				JEDEC	JEP106ID [6:4]		
	Reset value																									0	0	1	1	1	0	1	1
0xFEC	DWT_PIDR3	Res.	Res.	Res.	Res.	Res.	Res.	Res.	Res.	Res.	Res.	Res.	Res.	Res.	Res.	Res.	Res.	Res.	Res.	Res.	Res.	Res.	Res.	Res.	Res.	REVAND[3:0]				CMOD[3:0]			
	Reset value																									0	0	0	0	0	0	0	0
0xFF0	DWT_CIDR0	Res.	Res.	Res.	Res.	Res.	Res.	Res.	Res.	Res.	Res.	Res.	Res.	Res.	Res.	Res.	Res.	Res.	Res.	Res.	Res.	Res.	Res.	Res.	Res.	PREAMBLE[7:0]							
	Reset value																									0	0	0	0	1	1	0	1
0xFF4	DWT_CIDR1	Res.	Res.	Res.	Res.	Res.	Res.	Res.	Res.	Res.	Res.	Res.	Res.	Res.	Res.	Res.	Res.	Res.	Res.	Res.	Res.	Res.	Res.	Res.	Res.	CLASS[3:0]				PREAMBLE [11:8]			
	Reset value																									1	1	1	0	0	0	0	0
0xFF8	DWT_CIDR2	Res.	Res.	Res.	Res.	Res.	Res.	Res.	Res.	Res.	Res.	Res.	Res.	Res.	Res.	Res.	Res.	Res.	Res.	Res.	Res.	Res.	Res.	Res.	Res.	PREAMBLE[19:12]							
	Reset value																									0	0	0	0	0	1	0	1
0xFFC	DWT_CIDR3	Res.	Res.	Res.	Res.	Res.	Res.	Res.	Res.	Res.	Res.	Res.	Res.	Res.	Res.	Res.	Res.	Res.	Res.	Res.	Res.	Res.	Res.	Res.	Res.	PREAMBLE[27:20]							
	Reset value																									1	0	1	1	0	0	0	1

Refer to *Section 33.13: CPU1 ROM table* for the register boundary addresses.

33.15 CPU1 instrumentation trace macrocell (ITM)

The ITM generates trace information as packets four sources can generate packets. If multiple sources generate packets at the same time, the ITM arbitrates the order in which packets are output. The four sources in decreasing order of priority are:

1. Software trace

   Software can write directly to any of 32 x 32-bit ITM stimulus registers to generate packets. The permission level for each port can be programmed. When software writes to an enabled stimulus port, the ITM combines the identity of the port, the size of the write access and the data written, into a packet that it writes to a FIFO. The ITM outputs packets from the FIFO onto the trace bus. Reading a stimulus port register returns the status of the stimulus register (empty or pending) in bit 0.

2. Hardware trace

   The DWT generates trace packets in response to a data trace event, a PC sample or a performance profiling counter wraparound. The ITM outputs these packets on the trace bus.

3. Local timestamping

   The ITM contains a 21-bit counter clocked by the (pre-divided) processor clock. The counter value is output in a timestamp packet on the trace bus. The counter is reset to zero every time a timestamp packet is generated. The timestamps thus indicate the time elapsed since the previous timestamp packet.

33.15.1 ITM stimulus register x (ITM_STIMRx)

Address offset: 0x000 + x * 0x4 (x = 0 to 31)

Reset value: Unknown

31	30	29	28	27	26	25	24	23	22	21	20	19	18	17	16
STIMULUS[31:16]															
r	r	r	r	r	r	r	r	r	r	r	r	r	r	r	r
15	14	13	12	11	10	9	8	7	6	5	4	3	2	1	0
STIMULUS[15:0]															
r	r	r	r	r	r	r	r	r	r	r	r	r	r	r	r

Bits 31:0 **STIMULUS[31:0]**: Write data is output on the trace bus as a software event packet. When reading, bit 0 is a FIFOREADY indicator:

0: Stimulus port buffer is full (or port is disabled)

1: Stimulus port can accept new write data

33.15.2 ITM trace enable register (ITM_TER)

Address offset: 0x080

Reset value: 0x00000000

31	30	29	28	27	26	25	24	23	22	21	20	19	18	17	16
STIMENA[31:16]															
r	r	r	r	r	r	r	r	r	r	r	r	r	r	r	r
15	14	13	12	11	10	9	8	7	6	5	4	3	2	1	0
STIMENA[15:0]															
r	r	r	r	r	r	r	r	r	r	r	r	r	r	r	r

Bits 31:0 **STIMENA[31:0]**: Each bit n (0:31) enables the stimulus port associated with the ITM_STIMRn register.

0: Port disabled
1: Port enabled

33.15.3 ITM trace privilege register (ITM_TPR)

Address offset: 0xE00

Reset value: 0x00000000

31	30	29	28	27	26	25	24	23	22	21	20	19	18	17	16
PRIVMASK[31:16]															
r	r	r	r	r	r	r	r	r	r	r	r	r	r	r	r
15	14	13	12	11	10	9	8	7	6	5	4	3	2	1	0
PRIVSK[15:0]															
r	r	r	r	r	r	r	r	r	r	r	r	r	r	r	r

Bits 31:0 **PRIVMASK[31:0]**: Enable unprivileged access to ITM stimulus ports. Each bit controls eight stimulus ports.

0bXXX0: Unprivileged access permitted on ports 0 to 7
0bXXX1: Only privileged access permitted on ports 0 to 7
0bXX0X: Unprivileged access permitted on ports 8 to 15
0bXX1X: Only privileged access permitted on ports 8 to 15
0bX0XX: Unprivileged access permitted on ports 16 to 23
0bX1XX: Only privileged access permitted on ports 16 to 23
0b0XXX: Unprivileged access permitted on ports 24 to 31
0b1XXX: Only privileged access permitted on ports 24 to 31

33.15.4 ITM trace control register (ITM_TCR)

Address offset: 0xE80

Reset value: 0x0000 0000

31	30	29	28	27	26	25	24	23	22	21	20	19	18	17	16
Res.	Res.	Res.	Res.	Res.	Res.	Res.	Res.	BUSY	TRACEBUSID[6:0]						
								rw	rw	rw	rw	rw	rw	rw	rw

15	14	13	12	11	10	9	8	7	6	5	4	3	2	1	0
Res.	Res.	Res.	Res.	Res.	Res.	TSPRESCALE[1:0]		Res.	Res.	Res.	SWOENA	TXENA	SYNCENA	TSENA	ITMENA
						rw	rw				r	rw	rw	rw	rw

Bits 31:24 Reserved, must be kept at reset value.

Bit 23 **BUSY**: Indicates whether the ITM is currently processing events (read only).
0: Not busy
1: Busy

Bits 22:16 **TRACEBUSID[6:0]**: Identifier for multi-source trace stream formatting. If multi-source trace is in use, the debugger must write a non-zero value to this field. Note: different IDs must be used for each trace source in the system.

Bits 15:10 Reserved, must be kept at reset value.

Bits 9:8 **TSPRESCALE[1:0]**: Local timestamp prescaler, used with the trace packet reference clock. The possible values are:
0x0: No prescaling.
0x1: Divide by 4.
0x2: Divide by 16.
0x3: Divide by 64.

Bit 7:5 Reserved, must be kept at reset value.

Bit 4 **SWOENA**: Enables asynchronous clocking of the timestamp counter (read only).
0: Timestamp counter uses processor clock

Bit 3 **TXENA**: Enables forwarding of hardware event packets from the DWT unit to the trace port.
0: Disabled
1: Enabled

Bit 2 **SYNCENA**: Enables synchronization packet transmission.
Note: The debugger setting this bit must also configure the DWT_CTRLR register SYNCTAP field in the DWT for correct synchronization speed.
0: Disabled
1: Enabled

Bit 1 **TSENA**: Enables local timestamp generation.
0: Disabled
1: Enabled

Bit 0 **ITMENA**: Enables the ITM.
0: Disabled
1: Enabled

33.15.5 ITM CoreSight peripheral identity register 4 (ITM_PIDR4)

Address offset: 0xFD0

Reset value: 0x0000 0004

31	30	29	28	27	26	25	24	23	22	21	20	19	18	17	16
Res.	Res.	Res.	Res.	Res.	Res.	Res.	Res.	Res.	Res.	Res.	Res.	Res.	Res.	Res.	Res.

15	14	13	12	11	10	9	8	7	6	5	4	3	2	1	0
Res.	Res.	Res.	Res.	Res.	Res.	Res.	Res.	4KCOUNT[3:0]				JEP106CON[3:0]			
								r	r	r	r	r	r	r	r

Bits 31:8 Reserved, must be kept at reset value.

Bits 7:4 **4KCOUNT[3:0]**: register file size
0x0: Register file occupies a single 4 KB region

Bits 3:0 **JEP106CON[3:0]**: JEP106 continuation code
0x4: Arm® JEDEC code

33.15.6 ITM CoreSight peripheral identity register 0 (ITM_PIDR0)

Address offset: 0xFE0

Reset value: 0x0000 0001

31	30	29	28	27	26	25	24	23	22	21	20	19	18	17	16
Res.	Res.	Res.	Res.	Res.	Res.	Res.	Res.	Res.	Res.	Res.	Res.	Res.	Res.	Res.	Res.

15	14	13	12	11	10	9	8	7	6	5	4	3	2	1	0
Res.	Res.	Res.	Res.	Res.	Res.	Res.	Res.	PARTNUM[7:0]							
								r	r	r	r	r	r	r	r

Bits 31:8 Reserved, must be kept at reset value.

Bits 7:0 **PARTNUM[7:0]**: Part number bits [7:0]
0x01: ITM part number

33.15.7 ITM CoreSight peripheral identity register 1 (ITM_PIDR1)

Address offset: 0xFE4

Reset value: 0x0000 00B0

31	30	29	28	27	26	25	24	23	22	21	20	19	18	17	16
Res.	Res.	Res.	Res.	Res.	Res.	Res.	Res.	Res.	Res.	Res.	Res.	Res.	Res.	Res.	Res.

15	14	13	12	11	10	9	8	7	6	5	4	3	2	1	0
Res.	Res.	Res.	Res.	Res.	Res.	Res.	Res.	JEP106ID[3:0]				PARTNUM[11:8]			
								r	r	r	r	r	r	r	r

Bit 31:8 Reserved, must be kept at reset value.

Bits 7:4 **JEP106ID[3:0]**: JEP106 identity code bits [3:0]
0xB: Arm® JEDEC code

Bits 3:0 **PARTNUM[11:8]**: Part number bits [11:8]
0x0: ITM part number

33.15.8 ITM CoreSight peripheral identity register 2 (ITM_PIDR2)

Address offset: 0xFE8

Reset value: 0x0000 003B

31	30	29	28	27	26	25	24	23	22	21	20	19	18	17	16
Res.	Res.	Res.	Res.	Res.	Res.	Res.	Res.	Res.	Res.	Res.	Res.	Res.	Res.	Res.	Res.

15	14	13	12	11	10	9	8	7	6	5	4	3	2	1	0
Res.	Res.	Res.	Res.	Res.	Res.	Res.	Res.	REVISION[3:0]				JEDEC	JEP106ID[6:4]		
								r	r	r	r	r	r	r	r

Bit 31:8 Reserved, must be kept at reset value.

Bit s 7:4 **REVISION[3:0]**: Component revision number
0x3: r0p4

Bit 3 **JEDEC**: JEDEC assigned value
0x1: Designer ID specified by JEDEC

Bits 2:0 **JEP106ID[6:4]**: JEP106 identity code bits [6:4]
0x3: Arm® JEDEC code

33.15.9 ITM CoreSight peripheral identity register 3 (ITM_PIDR3)

Address offset: 0xFEC

Reset value: 0x0000 0000

31	30	29	28	27	26	25	24	23	22	21	20	19	18	17	16
Res.	Res.	Res.	Res.	Res.	Res.	Res.	Res.	Res.	Res.	Res.	Res.	Res.	Res.	Res.	Res.

15	14	13	12	11	10	9	8	7	6	5	4	3	2	1	0
Res.	Res.	Res.	Res.	Res.	Res.	Res.	Res.	REVAND[3:0]				CMOD[3:0]			
								r	r	r	r	r	r	r	r

Bit 31:8 Reserved, must be kept at reset value.

Bits 7:4 **REVAND[3:0]**: metal fix version
0x0: No metal fix

Bits 3:0 **CMOD[3:0]**: Customer modified
0x0: No customer modifications

33.15.10 ITM CoreSight component identity register 0 (ITM_CIDR0)

Address offset: 0xFF0

Reset value: 0x0000 000D

31	30	29	28	27	26	25	24	23	22	21	20	19	18	17	16
Res.	Res.	Res.	Res.	Res.	Res.	Res.	Res.	Res.	Res.	Res.	Res.	Res.	Res.	Res.	Res.

15	14	13	12	11	10	9	8	7	6	5	4	3	2	1	0
Res.	Res.	Res.	Res.	Res.	Res.	Res.	Res.	PREAMBLE[7:0]							
								r	r	r	r	r	r	r	r

Bits 31:8 Reserved, must be kept at reset value.

Bits 7:0 **PREAMBLE[7:0]**: Component ID bits [7:0]
0x0D: Common ID value

33.15.11 ITM CoreSight peripheral identity register 1 (ITM_CIDR1)

Address offset: 0xFF4

Reset value: 0x0000 00E0

31	30	29	28	27	26	25	24	23	22	21	20	19	18	17	16
Res.	Res.	Res.	Res.	Res.	Res.	Res.	Res.	Res.	Res.	Res.	Res.	Res.	Res.	Res.	Res.

15	14	13	12	11	10	9	8	7	6	5	4	3	2	1	0
Res.	Res.	Res.	Res.	Res.	Res.	Res.	Res.	CLASS[3:0]				PREAMBLE[11:8]			
								r	r	r	r	r	r	r	r

Bit 31:8 Reserved, must be kept at reset value.

Bits 7:4 **CLASS[3:0]**: Component ID bits [15:12] - component class
0xE: Trace generator component

Bits 3:0 **PREAMBLE[11:8]**: Component ID bits [11:8]
0x0: Common ID value

33.15.12 ITM CoreSight component identity register 2 (ITM_CIDR2)

Address offset: 0xFF8

Reset value: 0x0000 0005

31	30	29	28	27	26	25	24	23	22	21	20	19	18	17	16
Res.	Res.	Res.	Res.	Res.	Res.	Res.	Res.	Res.	Res.	Res.	Res.	Res.	Res.	Res.	Res.
15	14	13	12	11	10	9	8	7	6	5	4	3	2	1	0
Res.	Res.	Res.	Res.	Res.	Res.	Res.	Res.	PREAMBLE[19:12]							
								r	r	r	r	r	r	r	r

Bits 31:8 Reserved, must be kept at reset value.

Bits 7:0 **PREAMBLE[19:12]**: Component ID bits [23:16]
0x05: Common ID value

33.15.13 ITM CoreSight component identity register 3 (ITM_CIDR3)

Address offset: 0xFFC

Reset value: 0x0000 00B1

31	30	29	28	27	26	25	24	23	22	21	20	19	18	17	16
Res.	Res.	Res.	Res.	Res.	Res.	Res.	Res.	Res.	Res.	Res.	Res.	Res.	Res.	Res.	Res.
15	14	13	12	11	10	9	8	7	6	5	4	3	2	1	0
Res.	Res.	Res.	Res.	Res.	Res.	Res.	Res.	PREAMBLE[27:20]							
								r	r	r	r	r	r	r	r

Bits 31:8 Reserved, must be kept at reset value.

Bits 7:0 **PREAMBLE[27:20]**: Component ID bits [31:24]
0xB1: Common ID value

33.15.14 ITM register map and reset values

The ITM registers are located at address range 0xE0000000 to 0xE0000FFC.

Table 228. CPU1 ITM register map and reset values

Offset	Register name	31	30	29	28	27	26	25	24	23	22	21	20	19	18	17	16	15	14	13	12	11	10	9	8	7	6	5	4	3	2	1	0
0x000 to 0x07C	ITM_STIM0-31R	STIMULUS[31:0]																															
	Reset value	x	x	x	x	x	x	x	x	x	x	x	x	x	x	x	x	x	x	x	x	x	x	x	x	x	x	x	x	x	x	x	x
0x0E00	ITM_TER	STIMENA[31:0]																															
	Reset value	0	0	0	0	0	0	0	0	0	0	0	0	0	0	0	0	0	0	0	0	0	0	0	0	0	0	0	0	0	0	0	0
0x0E40	ITM_TPR	Res.	Res.	Res.	Res.	Res.	Res.	Res.	Res.	Res.	Res.	Res.	Res.	Res.	Res.	Res.	Res.	Res.	Res.	Res.	Res.	Res.	Res.	Res.	Res.	Res.	Res.	Res.	Res.	PRIVMASK[3:0]			
	Reset value																													0	0	0	0
0xE80	ITM_TCR	Res.	Res.	Res.	Res.	Res.	Res.	Res.	Res.	BUSY	TRACEBUSID[6:0]							Res.	Res.	Res.	Res.	GTSFREQ[1:0]		TSPRESCALE[1:0]		Res.	Res.	Res.	SWOENA	TXENA	SYNCENA	TSENA	ITMENA
	Reset value									0	0	0	0	0	0	0	0					0	0	0	0				0	0	0	0	0
0xFD0	ITM_PIDR4	Res.	Res.	Res.	Res.	Res.	Res.	Res.	Res.	Res.	Res.	Res.	Res.	Res.	Res.	Res.	Res.	Res.	Res.	Res.	Res.	Res.	Res.	Res.	Res.	4KCOUNT [3:0]				JEP106CON [3:0]			
	Reset value																									0	0	0	0	0	1	0	0
0xFE0	ITM_PIDR0	Res.	Res.	Res.	Res.	Res.	Res.	Res.	Res.	Res.	Res.	Res.	Res.	Res.	Res.	Res.	Res.	Res.	Res.	Res.	Res.	Res.	Res.	Res.	Res.	PARTNUM[7:0]							
	Reset value																									0	0	0	0	0	0	0	1
0xFE4	ITM_PIDR1	Res.	Res.	Res.	Res.	Res.	Res.	Res.	Res.	Res.	Res.	Res.	Res.	Res.	Res.	Res.	Res.	Res.	Res.	Res.	Res.	Res.	Res.	Res.	Res.	JEP106ID [3:0]				PARTNUM [11:8]			
	Reset value																									1	0	1	1	0	0	0	0
0xFE8	ITM_PIDR2	Res.	Res.	Res.	Res.	Res.	Res.	Res.	Res.	Res.	Res.	Res.	Res.	Res.	Res.	Res.	Res.	Res.	Res.	Res.	Res.	Res.	Res.	Res.	Res.	REVISION [3:0]				JEDEC	JEP106ID [6:4]		
	Reset value																									0	0	1	1	1	0	1	1
0xFEC	ITM_PIDR3	Res.	Res.	Res.	Res.	Res.	Res.	Res.	Res.	Res.	Res.	Res.	Res.	Res.	Res.	Res.	Res.	Res.	Res.	Res.	Res.	Res.	Res.	Res.	Res.	REVAND[3:0]				CMOD[3:0]			
	Reset value																									0	0	0	0	0	0	0	0
0xFF0	ITM_CIDR0	Res.	Res.	Res.	Res.	Res.	Res.	Res.	Res.	Res.	Res.	Res.	Res.	Res.	Res.	Res.	Res.	Res.	Res.	Res.	Res.	Res.	Res.	Res.	Res.	PREAMBLE[7:0]							
	Reset value																									0	0	0	0	1	1	0	1
0xFF4	ITM_CIDR1	Res.	Res.	Res.	Res.	Res.	Res.	Res.	Res.	Res.	Res.	Res.	Res.	Res.	Res.	Res.	Res.	Res.	Res.	Res.	Res.	Res.	Res.	Res.	Res.	CLASS[3:0]				PREAMBLE [11:8]			
	Reset value																									1	1	1	0	0	0	0	0
0xFF8	ITM_CIDR2	Res.	Res.	Res.	Res.	Res.	Res.	Res.	Res.	Res.	Res.	Res.	Res.	Res.	Res.	Res.	Res.	Res.	Res.	Res.	Res.	Res.	Res.	Res.	Res.	PREAMBLE[19:12]							
	Reset value																									0	0	0	0	0	1	0	1
0xFFC	ITM_CIDR3	Res.	Res.	Res.	Res.	Res.	Res.	Res.	Res.	Res.	Res.	Res.	Res.	Res.	Res.	Res.	Res.	Res.	Res.	Res.	Res.	Res.	Res.	Res.	Res.	PREAMBLE[27:20]							
	Reset value																									1	0	1	1	0	0	0	1

Refer to *Section 33.13: CPU1 ROM table* for the register boundary addresses.

33.16 CPU1 breakpoint unit (FPB)

The FPB allows the user to set hardware breakpoints. It contains six comparators that monitor the instruction fetch address and two literal address comparators. If a match occurs, the address is remapped to an address in system memory, defined by the FPB_REMAPR register plus an offset corresponding to the matching comparator. Alternatively, the instruction comparators can be configured to generate a breakpoint instruction.

33.16.1 FPB control register (FPB_CTRLR)

Address offset: 0x000

Reset value: 0x0000 0260

31	30	29	28	27	26	25	24	23	22	21	20	19	18	17	16
Res.	Res.	Res.	Res.	Res.	Res.	Res.	Res.	Res.	Res.	Res.	Res.	Res.	Res.	Res.	Res.

15	14	13	12	11	10	9	8	7	6	5	4	3	2	1	0
Res.	NUM_CODE[6:4]			NUM_LIT[3:0]				NUM_CODE[3:0]				Res.	Res.	KEY	ENABLE
	r	r	r	r	r	r	r	r	r	r	r			rw	rw

Bits 31:15 Reserved, must be kept at reset value.

Bits 14:12 **NUM_CODE[6:4]**: Number of instruction address comparators supported - least significant bits (read only).

0x0: 6 instruction comparators supported.

Bits 11:8 **NUM_LIT[3:0]**: Number of literal address comparators supported (read only).

0x2: Two literal comparators supported.

Bits 7:4 **NUM_CODE[3:0]**: Number of instruction address comparators supported - least significant bits (read only).

0x6: 6 instruction comparators supported

Bit 1 **KEY**: Write protect key. A write to FPB_CTRLR register is ignored if this bit is not set to 1.

Bits 0 **ENABLE**: FPB enable

0x0: Disable

0x1: Enable

33.16.2 FPB remap register (FPB_REMAPR)

Address offset: 0x004

Reset value: 0x2000 0000

31	30	29	28	27	26	25	24	23	22	21	20	19	18	17	16
Res.	Res.	RMPSPT	REMAP[23:11]												
		r	rw	rw	rw	rw	rw	rw	rw	rw	rw	rw	rw	rw	rw

15	14	13	12	11	10	9	8	7	6	5	4	3	2	1	0
REMAP[10:0]											Res.	Res.	Res.	Res.	Res.
rw	rw	rw	rw	rw	rw	rw	rw	rw	rw	rw					

Bits 31:30 Reserved, must be kept at reset value.

Bit 29 **RMPSPT**: Indicates whether Flash memory patch remap is supported (read only).
0x1: Remapping supported.

Bits 28:5 **REMAP[23:0]**: Remap target address. Bits [28:5] of the base address in SRAM to which the FPB remaps the address. The remap base address must be aligned to the number of words required to support the implemented comparators, that is to (NUM_CODE+NUM_LIT) words, with a minimum alignment of 8 words. Because remap is into the SRAM memory region, 0x20000000-0x3FFFFFFF, bits [31:29] of the remap address are 0b001.

Bits 4:0 Reserved, must be kept at reset value.

33.16.3 FPB comparator registers (FPB_COMPxR)

Address offset: 0x008 + x * 0x4 (for x = 0 to 7)

Reset value: 0x0000 0000

31	30	29	28	27	26	25	24	23	22	21	20	19	18	17	16
REPLACE[1:0]		Res.	COMP[26:14]												
rw			rw	rw	rw	rw	rw	rw	rw	rw	rw	rw	rw	rw	rw

15	14	13	12	11	10	9	8	7	6	5	4	3	2	1	0
COMP[13:0]														Res.	ENABLE
rw	rw	rw	rw	rw	rw	rw	rw	rw	rw	rw	rw	rw	rw		rw

Bits 31:30 **REPLACE[1:0]**: Defines the behavior when a match occurs between the COMP field and the instruction fetch address.
0x0: Reserved
0x1: Breakpoint on lower half-word, upper half-word is unaffected.
0x2: Breakpoint on upper half-word, lower half-word is unaffected.
0x3: Breakpoint on both upper and lower half-words.

Bit 29 Reserved, must be kept at reset value.

Bits 28:2 **COMP[26:0]**: Value to compare with address bits 28:2 of accesses to instruction code memory (0x00000000 to 0x1FFFFFFF). If a match occurs, the action to be taken is defined by the REPLACE field.

Bit 1 Reserved, must be kept at reset value.

Bit 0 **ENABLE**: Comparator enable. The comparator is only enabled if both this bit and the FPB ENABLE bit in the FPB_CTRLR register are set.
0: Disabled
1: Enabled

33.16.4 FPB CoreSight peripheral identity register 4 (FPB_PIDR4)

Address offset: 0xFD0

Reset value: 0x0000 0004

31	30	29	28	27	26	25	24	23	22	21	20	19	18	17	16
Res.	Res.	Res.	Res.	Res.	Res.	Res.	Res.	Res.	Res.	Res.	Res.	Res.	Res.	Res.	Res.

15	14	13	12	11	10	9	8	7	6	5	4	3	2	1	0
Res.	Res.	Res.	Res.	Res.	Res.	Res.	Res.	4KCOUNT[3:0]				JEP106CON[3:0]			
								r	r	r	r	r	r	r	r

Bits 31:8 Reserved, must be kept at reset value.

Bits 7:4 **4KCOUNT[3:0]**: register file size
0x0: Register file occupies a single 4 KB region

Bits 3:0 **JEP106CON[3:0]**: JEP106 continuation code
0x4: Arm® JEDEC code

33.16.5 FPB CoreSight peripheral identity register 0 (FPB_PIDR0)

Address offset: 0xFE0

Reset value: 0x0000 0003

31	30	29	28	27	26	25	24	23	22	21	20	19	18	17	16
Res.	Res.	Res.	Res.	Res.	Res.	Res.	Res.	Res.	Res.	Res.	Res.	Res.	Res.	Res.	Res.

15	14	13	12	11	10	9	8	7	6	5	4	3	2	1	0
Res.	Res.	Res.	Res.	Res.	Res.	Res.	Res.	PARTNUM[7:0]							
								r	r	r	r	r	r	r	r

Bits 31:8 Reserved, must be kept at reset value.

Bits 7:0 **PARTNUM[7:0]**: Part number bits [7:0]
0x03: FPB part number

33.16.6 FPB CoreSight peripheral identity register 1 (FPB_PIDR1)

Address offset: 0xFE4

Reset value: 0x0000 00B0

31	30	29	28	27	26	25	24	23	22	21	20	19	18	17	16
Res.	Res.	Res.	Res.	Res.	Res.	Res.	Res.	Res.	Res.	Res.	Res.	Res.	Res.	Res.	Res.

15	14	13	12	11	10	9	8	7	6	5	4	3	2	1	0
Res.	Res.	Res.	Res.	Res.	Res.	Res.	Res.	JEP106ID[3:0]				PARTNUM[11:8]			
								r	r	r	r	r	r	r	r

Bit 31:8 Reserved, must be kept at reset value.

Bits 7:4 **JEP106ID[3:0]**: JEP106 identity code bits [3:0]
0xB: Arm® JEDEC code

Bits 3:0 **PARTNUM[11:8]**: Part number bits [11:8]
0x0: FPB part number

33.16.7 FPB CoreSight peripheral identity register 2 (FPB_PIDR2)

Address offset: 0xFE8

Reset value: 0x0000 002B

31	30	29	28	27	26	25	24	23	22	21	20	19	18	17	16
Res.	Res.	Res.	Res.	Res.	Res.	Res.	Res.	Res.	Res.	Res.	Res.	Res.	Res.	Res.	Res.

15	14	13	12	11	10	9	8	7	6	5	4	3	2	1	0
Res.	Res.	Res.	Res.	Res.	Res.	Res.	Res.	REVISION[3:0]				JEDEC	JEP106ID[6:4]		
								r	r	r	r	r	r	r	r

Bit 31:8 Reserved, must be kept at reset value.

Bit s 7:4 **REVISION[3:0]**: Component revision number
0x2: r0p3

Bit 3 **JEDEC**: JEDEC assigned value
0x1: Designer ID specified by JEDEC

Bits 2:0 **JEP106ID[6:4]**: JEP106 identity code bits [6:4]
0x3: Arm® JEDEC code

33.16.8 FPB CoreSight peripheral identity register 3 (FPB_PIDR3)

Address offset: 0xFEC

Reset value: 0x0000 0000

31	30	29	28	27	26	25	24	23	22	21	20	19	18	17	16
Res.	Res.	Res.	Res.	Res.	Res.	Res.	Res.	Res.	Res.	Res.	Res.	Res.	Res.	Res.	Res.

15	14	13	12	11	10	9	8	7	6	5	4	3	2	1	0
Res.	Res.	Res.	Res.	Res.	Res.	Res.	Res.	REVAND[3:0]				CMOD[3:0]			
								r	r	r	r	r	r	r	r

Bit 31:8 Reserved, must be kept at reset value.

Bits 7:4 **REVAND[3:0]**: metal fix version
0x0: No metal fix

Bits 3:0 **CMOD[3:0]**: Customer modified
0x0: No customer modifications

33.16.9 FPB CoreSight component identity register 0 (FPB_CIDR0)

Address offset: 0xFF0

Reset value: 0x0000 000D

31	30	29	28	27	26	25	24	23	22	21	20	19	18	17	16
Res.	Res.	Res.	Res.	Res.	Res.	Res.	Res.	Res.	Res.	Res.	Res.	Res.	Res.	Res.	Res.

15	14	13	12	11	10	9	8	7	6	5	4	3	2	1	0
Res.	Res.	Res.	Res.	Res.	Res.	Res.	Res.	PREAMBLE[7:0]							
								r	r	r	r	r	r	r	r

Bits 31:8 Reserved, must be kept at reset value.

Bits 7:0 **PREAMBLE[7:0]**: Component ID bits [7:0]
0x0D: Common ID value

33.16.10 FPB CoreSight peripheral identity register 1 (FPB_CIDR1)

Address offset: 0xFF4

Reset value: 0x0000 00E0

31	30	29	28	27	26	25	24	23	22	21	20	19	18	17	16
Res.	Res.	Res.	Res.	Res.	Res.	Res.	Res.	Res.	Res.	Res.	Res.	Res.	Res.	Res.	Res.

15	14	13	12	11	10	9	8	7	6	5	4	3	2	1	0
Res.	Res.	Res.	Res.	Res.	Res.	Res.	Res.	CLASS[3:0]				PREAMBLE[11:8]			
								r	r	r	r	r	r	r	r

Bit 31:8 Reserved, must be kept at reset value.

Bits 7:4 **CLASS[3:0]**: Component ID bits [15:12] - component class
0xE: Trace generator component

Bits 3:0 **PREAMBLE[11:8]**: Component ID bits [11:8]
0x0: Common ID value

33.16.11 FPB CoreSight component identity register 2 (FPB_CIDR2)

Address offset: 0xFF8

Reset value: 0x0000 0005

31	30	29	28	27	26	25	24	23	22	21	20	19	18	17	16
Res.	Res.	Res.	Res.	Res.	Res.	Res.	Res.	Res.	Res.	Res.	Res.	Res.	Res.	Res.	Res.
15	14	13	12	11	10	9	8	7	6	5	4	3	2	1	0
Res.	Res.	Res.	Res.	Res.	Res.	Res.	Res.	PREAMBLE[19:12]							
								r	r	r	r	r	r	r	r

Bits 31:8 Reserved, must be kept at reset value.

Bits 7:0 **PREAMBLE[19:12]**: Component ID bits [23:16]
0x05: Common ID value

33.16.12 FPB CoreSight component identity register 3 (FPB_CIDR3)

Address offset: 0xFFC

Reset value: 0x0000 00B1

31	30	29	28	27	26	25	24	23	22	21	20	19	18	17	16
Res.	Res.	Res.	Res.	Res.	Res.	Res.	Res.	Res.	Res.	Res.	Res.	Res.	Res.	Res.	Res.
15	14	13	12	11	10	9	8	7	6	5	4	3	2	1	0
Res.	Res.	Res.	Res.	Res.	Res.	Res.	Res.	PREAMBLE[27:20]							
								r	r	r	r	r	r	r	r

Bits 31:8 Reserved, must be kept at reset value.

Bits 7:0 **PREAMBLE[27:20]**: Component ID bits [31:24]
0xB1: Common ID value

33.16.13 FPB register map and reset values

The CPU1 FPB registers are located at address range 0xE0002000 to 0xE0002FFC.

Table 229. CPU1 FPB register map and reset values

Offset	Register name	31	30	29	28	27	26	25	24	23	22	21	20	19	18	17	16	15	14	13	12	11	10	9	8	7	6	5	4	3	2	1	0
0x000	FPB_CTRLR	Res.	Res.	Res.	Res.	Res.	Res.	Res.	Res.	Res.	Res.	Res.	Res.	Res.	Res.	Res.	Res.	Res.	NUM_CODE[6:4]			NUM_LIT[3:0]				NUM_CODE[3:0]				Res.	Res.	KEY	ENABLE
	Reset value																		0	0	0	0	0	1	0	0	1	1	0			0	0
0x004	FPB_REMAPR	Res.	Res.	RMPSP	REMAP[23:0]																								Res.	Res.	Res.	Res.	Res.
	Reset value			1	0	0	0	0	0	0	0	0	0	0	0	0	0	0	0	0	0	0	0	0	0	0	0	0					
0x008 to 0x024	FPB_COMP0-7R	REPLACE[1:0]		Res.	COMP[26:0]																											Res.	ENABLE
	Reset value	0	0		0	0	0	0	0	0	0	0	0	0	0	0	0	0	0	0	0	0	0	0	0	0	0	0	0	0	0		0
0xFD0	FPB_PIDR4	Res.	Res.	Res.	Res.	Res.	Res.	Res.	Res.	Res.	Res.	Res.	Res.	Res.	Res.	Res.	Res.	Res.	Res.	Res.	Res.	Res.	Res.	Res.	Res.	4KCOUNT [3:0]				JEP106CON [3:0]			
	Reset value																									0	0	0	0	0	1	0	0
0xFE0	FPB_PIDR0	Res.	Res.	Res.	Res.	Res.	Res.	Res.	Res.	Res.	Res.	Res.	Res.	Res.	Res.	Res.	Res.	Res.	Res.	Res.	Res.	Res.	Res.	Res.	Res.	PARTNUM[7:0]							
	Reset value																									0	0	0	0	0	0	1	1
0xFE4	FPB_PIDR1	Res.	Res.	Res.	Res.	Res.	Res.	Res.	Res.	Res.	Res.	Res.	Res.	Res.	Res.	Res.	Res.	Res.	Res.	Res.	Res.	Res.	Res.	Res.	Res.	JEP106ID [3:0]				PARTNUM [11:8]			
	Reset value																									1	0	1	1	0	0	0	0
0xFE8	FPB_PIDR2	Res.	Res.	Res.	Res.	Res.	Res.	Res.	Res.	Res.	Res.	Res.	Res.	Res.	Res.	Res.	Res.	Res.	Res.	Res.	Res.	Res.	Res.	Res.	Res.	REVISION [3:0]				JEDEC	JEP106ID [6:4]		
	Reset value																									0	0	1	0	1	0	1	1
0xFEC	FPB_PIDR3	Res.	Res.	Res.	Res.	Res.	Res.	Res.	Res.	Res.	Res.	Res.	Res.	Res.	Res.	Res.	Res.	Res.	Res.	Res.	Res.	Res.	Res.	Res.	Res.	REVAND[3:0]				CMOD[3:0]			
	Reset value																									0	0	0	0	0	0	0	0
0xFF0	FPB_CIDR0	Res.	Res.	Res.	Res.	Res.	Res.	Res.	Res.	Res.	Res.	Res.	Res.	Res.	Res.	Res.	Res.	Res.	Res.	Res.	Res.	Res.	Res.	Res.	Res.	PREAMBLE[7:0]							
	Reset value																									0	0	0	0	1	1	0	1
0xFF4	FPB_CIDR1	Res.	Res.	Res.	Res.	Res.	Res.	Res.	Res.	Res.	Res.	Res.	Res.	Res.	Res.	Res.	Res.	Res.	Res.	Res.	Res.	Res.	Res.	Res.	Res.	CLASS[3:0]				PREAMBLE [11:8]			
	Reset value																									1	1	1	0	0	0	0	0
0xFF8	FPB_CIDR2	Res.	Res.	Res.	Res.	Res.	Res.	Res.	Res.	Res.	Res.	Res.	Res.	Res.	Res.	Res.	Res.	Res.	Res.	Res.	Res.	Res.	Res.	Res.	Res.	PREAMBLE[19:12]							
	Reset value																									0	0	0	0	0	1	0	1
0xFFC	FPB_CIDR3	Res.	Res.	Res.	Res.	Res.	Res.	Res.	Res.	Res.	Res.	Res.	Res.	Res.	Res.	Res.	Res.	Res.	Res.	Res.	Res.	Res.	Res.	Res.	Res.	PREAMBLE[27:20]							
	Reset value																									1	0	1	1	0	0	0	1

Refer to *Section 33.13: CPU1 ROM table* for the register boundary addresses.

33.17 CPU1 trace port interface unit (TPIU)

The TPIU formats the trace stream and outputs it on the external trace port signals. As shown in *Figure 321*, the TPIU has one ATB slave ports for incoming trace data from the ITM.

Figure 321. Trace port interface unit (TPIU)

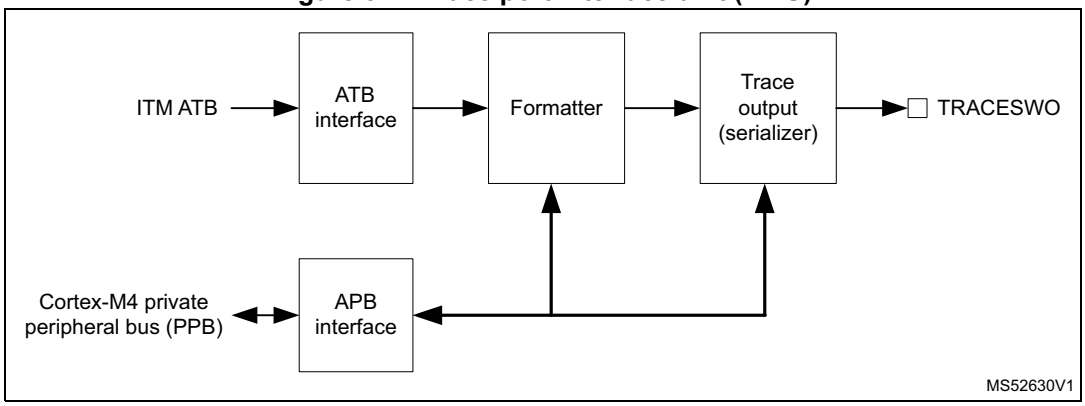

Trace data can be output on the serial wire output, TRACESWO.

For more information on the Trace Port Interface in the CPU1 refer to the Arm® Cortex®-M4 Technical Reference Manual *[2]*.

33.17.1 TPIU supported port size register (TPIU_SSPSR)

Address offset: 0x000

Reset value: 0x0000 000F

31	30	29	28	27	26	25	24	23	22	21	20	19	18	17	16
PORTSIZE[31:16]															
r	r	r	r	r	r	r	r	r	r	r	r	r	r	r	r
15	14	13	12	11	10	9	8	7	6	5	4	3	2	1	0
PORTSIZE[15:0]															
r	r	r	r	r	r	r	r	r	r	r	r	r	r	r	r

Bits 31:0 **PORTSIZE[31:0]**: Indicates supported trace port sizes, from 1 to 32 pins. Bit n-1 when set indicates that port size n is supported.

0x0000 000F: No parallel trace port is implemented

33.17.2 TPIU current port size register (TPIU_CSPSR)

Address offset: 0x004

Reset value: 0x0000 0001

31	30	29	28	27	26	25	24	23	22	21	20	19	18	17	16
PORTSIZE[31:16]															
r	r	r	r	r	r	r	r	r	r	r	r	r	r	r	r
15	14	13	12	11	10	9	8	7	6	5	4	3	2	1	0
PORTSIZE[15:0]															
r	r	r	r	r	r	r	r	r	r	r	r	r	r	r	r

Bits 31:0 **PORTSIZE[31:0]**: Indicates current trace port size. No parallel trace port is implemented.

33.17.3 TPIU asynchronous clock presecaler register (TPIU_ACPR)

Address offset: 0x010

Reset value: 0x0000 0000

31	30	29	28	27	26	25	24	23	22	21	20	19	18	17	16
Res.	Res.	Res.	Res.	Res.	Res.	Res.	Res.	Res.	Res.	Res.	Res.	Res.	Res.	Res.	Res.
15	14	13	12	11	10	9	8	7	6	5	4	3	2	1	0
Res.	Res.	Res.	PRESCALER[12:0]												
			rw	rw	rw	rw	rw	rw	rw	rw	rw	rw	rw	rw	rw

Bits 31:13 Reserved, must be kept at reset value.

Bits 12:0 **PRESCALER[12:0]**: Selects the baud rate for the asynchronous output, TRACESWO. The baud rate is given by the TRACELKIN frequency divided by (PRESCALER +1).

33.17.4 TPIU selected pin protocol register (TPIU_SPPR)

Address offset: 0x0F0

Reset value: 0x0000 0001

31	30	29	28	27	26	25	24	23	22	21	20	19	18	17	16
Res.	Res.	Res.	Res.	Res.	Res.	Res.	Res.	Res.	Res.	Res.	Res.	Res.	Res.	Res.	Res.
15	14	13	12	11	10	9	8	7	6	5	4	3	2	1	0
Res.	Res.	Res.	Res.	Res.	Res.	Res.	Res.	Res.	Res.	Res.	Res.	Res.	Res.	TXMODE[1:0]	
														rw	rw

Bits 31:2 Reserved, must be kept at reset value.

Bits 1:0 **TXMODE[1:0]**: Selects the protocol used for trace output.

0x0: Reserved
0x1: Asynchronous SWO using Manchester encoding
0x2: Asynchronous SWO using NRZ encoding
0x3: Reserved

33.17.5 TPIU formatter and flush status register (TPIU_FFSR)

Address offset: 0x300

Reset value: 0x0000 0008

31	30	29	28	27	26	25	24	23	22	21	20	19	18	17	16
Res.	Res.	Res.	Res.	Res.	Res.	Res.	Res.	Res.	Res.	Res.	Res.	Res.	Res.	Res.	Res.

15	14	13	12	11	10	9	8	7	6	5	4	3	2	1	0
Res.	Res.	Res.	Res.	Res.	Res.	Res.	Res.	Res.	Res.	Res.	Res.	FTNONSTOP	TCPRESENT	FTSTOPPED	FLINPROG
												r	r	r	r

Bits 31:4 Reserved, must be kept at reset value.

Bit 3 **FTNONSTOP**: Indicates whether formatter can be stopped or not.
1: Formatter cannot be stopped

Bit 2 **TCPRESENT**: Indicates whether the optional TRACECTL output pin is available for use.
0: TRACECTL pin is not present in this device.

Bit 1 **FTSTOPPED**: The formatter has received a stop request signal and all trace data and post-amble is sent. Any additional trace data on the ATB interface is ignored.
0: Formatter has not stopped
1: Formatter has stopped

Bit 0 **FLINPROG**: Flush in progress. Indicates whether a flush on the ATB slave port is in progress. This bit reflects the status of the AFVALIDS output. A flush can be initiated by the flush control bits in the TPIU_FFCR register.
0: No flush in progress
1: Flush in progress

33.17.6 TPIU formatter and flush control register (TPIU_FFCR)

Address offset: 0x304

Reset value: 0x0000 0102

31	30	29	28	27	26	25	24	23	22	21	20	19	18	17	16
Res.	Res.	Res.	Res.	Res.	Res.	Res.	Res.	Res.	Res.	Res.	Res.	Res.	Res.	Res.	Res.

15	14	13	12	11	10	9	8	7	6	5	4	3	2	1	0
Res.	Res.	Res.	Res.	Res.	Res.	Res.	TRIGIN	Res.	Res.	Res.	Res.	Res.	Res.	ENFCONT	Res.
							r							rw	

Bits 31:9 Reserved, must be kept at reset value.

Bit 8 **TRIGIN**: Trigger on trigger in.
1: Indicate a trigger in the trace stream when the TRIGIN input is asserted.

Bits 7:2 Reserved, must be kept at reset value.

Bit 1 **ENFCONT:** Enable continuous formatting. Setting this bit to zero in SWO mode bypasses the formatter and only ITM/DWT trace is output.

0: Continuous formatting is disabled

1: Continuous formatting is enabled

Bit 0 Reserved, must be kept at reset value.

33.17.7 TPIU formatter synchronization counter register (TPIU_FSCR)

Address offset: 0x308

Reset value: 0x0000 0040

31	30	29	28	27	26	25	24	23	22	21	20	19	18	17	16
Res.	Res.	Res.	Res.	Res.	Res.	Res.	Res.	Res.	Res.	Res.	Res.	Res.	Res.	Res.	Res.

15	14	13	12	11	10	9	8	7	6	5	4	3	2	1	0
Res.	Res.	Res.	CYCCOUNT[12:0]												
			rw	rw	rw	rw	rw	rw	rw	rw	rw	rw	rw	rw	rw

Bits 31:13 Reserved, must be kept at reset value.

Bits 12:0 **CYCCOUNT[12:0]**: Enables effective use of different sized TPAs without wasting large amounts of the storage capacity of the capture device. This counter contains the number of formatter frames since the last synchronization packet of 128 bits. It is a 12-bit counter with a maximum count value of 4096. This equates to synchronization every 65536 bytes, that is, 4096 packets x 16 bytes per packet. The default is set up for a synchronization packet every 1024 bytes, that is, every 64 formatter frames. If the formatter is configured for continuous mode, full and half-word sync frames are inserted during normal operation. Under these circumstances, the count value is the maximum number of complete frames between full synchronization packets.

33.17.8 TPIU claim tag set register (TPIU_CLAIMSETR)

Address offset: 0xFA0

Reset value: 0x0000 000F

31	30	29	28	27	26	25	24	23	22	21	20	19	18	17	16
Res.	Res.	Res.	Res.	Res.	Res.	Res.	Res.	Res.	Res.	Res.	Res.	Res.	Res.	Res.	Res.

15	14	13	12	11	10	9	8	7	6	5	4	3	2	1	0
Res.	Res.	Res.	Res.	Res.	Res.	Res.	Res.	Res.	Res.	Res.	Res.	CLAIMSET[3:0]			
												rw	rw	rw	rw

Bits 31:4 Reserved, must be kept at reset value.

Bits 3:0 **CLAIMSET[3:0]**: Set claim tag bits

Write:

0000: No effect
xxx1: Set bit 0
xx1x: Set bit 1
x1xx: Set bit 2
1xxx: Set bit 3

Read:

0xF: Indicates there are four bits in claim tag

33.17.9 TPIU claim tag clear register (TPIU_CLAIMCLR)

Address offset: 0xFA4

Reset value: 0x0000 0000

31	30	29	28	27	26	25	24	23	22	21	20	19	18	17	16
Res.	Res.	Res.	Res.	Res.	Res.	Res.	Res.	Res.	Res.	Res.	Res.	Res.	Res.	Res.	Res.

15	14	13	12	11	10	9	8	7	6	5	4	3	2	1	0
Res.	Res.	Res.	Res.	Res.	Res.	Res.	Res.	Res.	Res.	Res.	Res.	CLAIMCLR[3:0]			
												rw	rw	rw	rw

Bits 31:4 Reserved, must be kept at reset value.

Bits 3:0 **CLAIMCLR[3:0]**: Reset claim tag bits

Write:

0000: No effect
xxx1: Clear bit 0
xx1x: Clear bit 1
x1xx: Clear bit 2
1xxx: Clear bit 3

Read: Returns current value of claim tag

33.17.10 TPIU device configuration register (TPIU_DEVIDR)

Address offset: 0xFC8

Reset value: 0x0000 0CA1

31	30	29	28	27	26	25	24	23	22	21	20	19	18	17	16
Res.	Res.	Res.	Res.	Res.	Res.	Res.	Res.	Res.	Res.	Res.	Res.	Res.	Res.	Res.	Res.

15	14	13	12	11	10	9	8	7	6	5	4	3	2	1	0
Res.	Res.	Res.	Res.	SWO UARTNRZ	SWO MAN	TCLK DATA	FIFO SIZE[2:0]			CLK RELAT	MAXNUM[3:0]				
				r	r	r	r	r	r	r	r	r	r	r	r

Bits 31:11 Reserved, must be kept at reset value.

Bit 11 **SWONRZ**: Indicates whether Serial wire output, NRZ, is supported.
0x1: Supported

Bit 10 **SWOMAN**: Indicates whether Serial wire output, Manchester encoded format, is supported.
0x1: Supported

Bit 9 **TCLKDATA**: Indicates whether trace clock plus data is supported
0x0: Supported

Bits 8:6 **FIFOSIZE[2:0]**: FIFO size in powers of 2
0x2: FIFO size = 4 bytes

Bit 5 **CLKRELAT**: Indicates the relationship between the ATB clock and TRACECLKIN (synchronous or asynchronous)
0x1: Asynchronous

Bits 4:0 **MAXNUM[4:0]**: Number/type of ATB input port multiplexing
0x1: Two input ports, only one port is used in this product

33.17.11 TPIU device type identifier register (TPIU_DEVTYPER)

Address offset: 0xFCC

Reset value: 0x0000 0011

31	30	29	28	27	26	25	24	23	22	21	20	19	18	17	16
Res.	Res.	Res.	Res.	Res.	Res.	Res.	Res.	Res.	Res.	Res.	Res.	Res.	Res.	Res.	Res.

15	14	13	12	11	10	9	8	7	6	5	4	3	2	1	0
Res.	Res.	Res.	Res.	Res.	Res.	Res.	Res.	SUBTYPE[3:0]				MAJORTYPE[3:0]			
								r	r	r	r	r	r	r	r

Bits 31:8 Reserved, must be kept at reset value.

Bits 7:4 **SUBTYPE[3:0]**: Sub-classification
0x1: Trace port component

Bits 3:0 **MAJORTYPE[3:0]**: Major classification
0x1: Trace sink component

33.17.12 TPIU CoreSight peripheral identity register 4 (TPIU_PIDR4)

Address offset: 0xFD0

Reset value: 0x0000 0004

31	30	29	28	27	26	25	24	23	22	21	20	19	18	17	16
Res.	Res.	Res.	Res.	Res.	Res.	Res.	Res.	Res.	Res.	Res.	Res.	Res.	Res.	Res.	Res.

15	14	13	12	11	10	9	8	7	6	5	4	3	2	1	0
Res.	Res.	Res.	Res.	Res.	Res.	Res.	Res.	4KCOUNT[3:0]				JEP106CON[3:0]			
								r	r	r	r	r	r	r	r

Bits 31:8 Reserved, must be kept at reset value.

Bits 7:4 **4KCOUNT[3:0]**: register file size
0x0: Register file occupies a single 4 KB region

Bits 3:0 **JEP106CON[3:0]**: JEP106 continuation code
0x4: Arm® JEDEC code

33.17.13 TPIU CoreSight peripheral identity register 0 (TPIU_PIDR0)

Address offset: 0xFE0

Reset value: 0x0000 00A1

31	30	29	28	27	26	25	24	23	22	21	20	19	18	17	16
Res.	Res.	Res.	Res.	Res.	Res.	Res.	Res.	Res.	Res.	Res.	Res.	Res.	Res.	Res.	Res.

15	14	13	12	11	10	9	8	7	6	5	4	3	2	1	0
Res.	Res.	Res.	Res.	Res.	Res.	Res.	Res.	PARTNUM[7:0]							
								r	r	r	r	r	r	r	r

Bits 31:8 Reserved, must be kept at reset value.

Bits 7:0 **PARTNUM[7:0]**: Part number bits [7:0]
0xA1: CPU1 TPIU part number

33.17.14 TPIU CoreSight peripheral identity register 1 (TPIU_PIDR1)

Address offset: 0xFE4

Reset value: 0x0000 00B9

31	30	29	28	27	26	25	24	23	22	21	20	19	18	17	16
Res.	Res.	Res.	Res.	Res.	Res.	Res.	Res.	Res.	Res.	Res.	Res.	Res.	Res.	Res.	Res.

15	14	13	12	11	10	9	8	7	6	5	4	3	2	1	0
Res.	Res.	Res.	Res.	Res.	Res.	Res.	Res.	JEP106ID[3:0]				PARTNUM[11:8]			
								r	r	r	r	r	r	r	r

Bit 31:8 Reserved, must be kept at reset value.

Bits 7:4 **JEP106ID[3:0]**: JEP106 identity code bits [3:0]
0xB: Arm® JEDEC code

Bits 3:0 **PARTNUM[11:8]**: Part number bits [11:8]
0x9: CPU1 TPIU part number

33.17.15 TPIU CoreSight peripheral identity register 2 (TPIU_PIDR2)

Address offset: 0xFE8

Reset value: 0x0000 004B

31	30	29	28	27	26	25	24	23	22	21	20	19	18	17	16
Res.	Res.	Res.	Res.	Res.	Res.	Res.	Res.	Res.	Res.	Res.	Res.	Res.	Res.	Res.	Res.
15	14	13	12	11	10	9	8	7	6	5	4	3	2	1	0
Res.	Res.	Res.	Res.	Res.	Res.	Res.	Res.	REVISION[3:0]				JEDEC	JEP106ID[6:4]		
								r	r	r	r	r	r	r	r

Bit 31:8 Reserved, must be kept at reset value.

Bit s 7:4 **REVISION[3:0]**: Component revision number
0x4: r0p5

Bit 3 **JEDEC**: JEDEC assigned value
0x1: Designer ID specified by JEDEC

Bits 2:0 **JEP106ID[6:4]**: JEP106 identity code bits [6:4]
0x3: Arm® JEDEC code

33.17.16 TPIU CoreSight peripheral identity register 3 (TPIU_PIDR3)

Address offset: 0xFEC

Reset value: 0x0000 0000

31	30	29	28	27	26	25	24	23	22	21	20	19	18	17	16
Res.	Res.	Res.	Res.	Res.	Res.	Res.	Res.	Res.	Res.	Res.	Res.	Res.	Res.	Res.	Res.
15	14	13	12	11	10	9	8	7	6	5	4	3	2	1	0
Res.	Res.	Res.	Res.	Res.	Res.	Res.	Res.	REVAND[3:0]				CMOD[3:0]			
								r	r	r	r	r	r	r	r

Bit 31:8 Reserved, must be kept at reset value.

Bits 7:4 **REVAND[3:0]**: metal fix version
0x0: No metal fix

Bits 3:0 **CMOD[3:0]**: Customer modified
0x0: No customer modifications

33.17.17 TPIU CoreSight component identity register 0 (TPIU_CIDR0)

Address offset: 0xFF0

Reset value: 0x0000 000D

31	30	29	28	27	26	25	24	23	22	21	20	19	18	17	16
Res.	Res.	Res.	Res.	Res.	Res.	Res.	Res.	Res.	Res.	Res.	Res.	Res.	Res.	Res.	Res.

15	14	13	12	11	10	9	8	7	6	5	4	3	2	1	0
Res.	Res.	Res.	Res.	Res.	Res.	Res.	Res.	PREAMBLE[7:0]							
								r	r	r	r	r	r	r	r

Bits 31:8 Reserved, must be kept at reset value.

Bits 7:0 **PREAMBLE[7:0]**: Component ID bits [7:0]
0x0D: Common ID value

33.17.18 TPIU CoreSight peripheral identity register 1 (TPIU_CIDR1)

Address offset: 0xFF4

Reset value: 0x0000 0090

31	30	29	28	27	26	25	24	23	22	21	20	19	18	17	16
Res.	Res.	Res.	Res.	Res.	Res.	Res.	Res.	Res.	Res.	Res.	Res.	Res.	Res.	Res.	Res.

15	14	13	12	11	10	9	8	7	6	5	4	3	2	1	0
Res.	Res.	Res.	Res.	Res.	Res.	Res.	Res.	CLASS[3:0]				PREAMBLE[11:8]			
								r	r	r	r	r	r	r	r

Bit 31:8 Reserved, must be kept at reset value.

Bits 7:4 **CLASS[3:0]**: Component ID bits [15:12] - component class
0x9: CoreSight™ component

Bits 3:0 **PREAMBLE[11:8]**: Component ID bits [11:8]
0x0: Common ID value

33.17.19 TPIU CoreSight component identity register 2 (TPIU_CIDR2)

Address offset: 0xFF8

Reset value: 0x0000 0005

31	30	29	28	27	26	25	24	23	22	21	20	19	18	17	16
Res.	Res.	Res.	Res.	Res.	Res.	Res.	Res.	Res.	Res.	Res.	Res.	Res.	Res.	Res.	Res.

15	14	13	12	11	10	9	8	7	6	5	4	3	2	1	0
Res.	Res.	Res.	Res.	Res.	Res.	Res.	Res.	PREAMBLE[19:12]							
								r	r	r	r	r	r	r	r

Bits 31:8 Reserved, must be kept at reset value.

Bits 7:0 **PREAMBLE[19:12]**: Component ID bits [23:16]
0x05: Common ID value

33.17.20 TPIU CoreSight component identity register 3 (TPIU_CIDR3)

Address offset: 0xFFC

Reset value: 0x0000 00B1

31	30	29	28	27	26	25	24	23	22	21	20	19	18	17	16
Res.	Res.	Res.	Res.	Res.	Res.	Res.	Res.	Res.	Res.	Res.	Res.	Res.	Res.	Res.	Res.

15	14	13	12	11	10	9	8	7	6	5	4	3	2	1	0
Res.	Res.	Res.	Res.	Res.	Res.	Res.	Res.	PREAMBLE[27:20]							
								r	r	r	r	r	r	r	r

Bits 31:8 Reserved, must be kept at reset value.

Bits 7:0 **PREAMBLE[27:20]**: Component ID bits [31:24]
0xB1: Common ID value

33.17.21 CPU1 TPIU register map and reset values

Table 230. CPU1 TPIU register map and reset values

Offset	Register name	31	30	29	28	27	26	25	24	23	22	21	20	19	18	17	16	15	14	13	12	11	10	9	8	7	6	5	4	3	2	1	0
0x000	TPIU_SSPSR	PORTSIZE[31:0]																															
	Reset value	0	0	0	0	0	0	0	0	0	0	0	0	0	0	0	0	0	0	0	0	0	0	0	0	0	0	0	0	1	1	1	1
0x004	TPIU_CSPSR	PORTSIZE[31:0]																															
	Reset value	0	0	0	0	0	0	0	0	0	0	0	0	0	0	0	0	0	0	0	0	0	0	0	0	0	0	0	0	0	0	0	1
0x010	TPIU_ACPR	Res.	Res.	Res.	Res.	Res.	Res.	Res.	Res.	Res.	Res.	Res.	Res.	Res.	Res.	Res.	Res.	Res.	Res.	Res.	PRESCALER[12:0]												
	Reset value																				0	0	0	0	0	0	0	0	0	0	0	0	0
0x0F0	TPIU_SPPR	Res.	Res.	Res.	Res.	Res.	Res.	Res.	Res.	Res.	Res.	Res.	Res.	Res.	Res.	Res.	Res.	Res.	Res.	Res.	Res.	Res.	Res.	Res.	Res.	Res.	Res.	Res.	Res.	Res.	Res.	TXMODE[1:0]	
	Reset value																															0	1
0x300	TPIU_FFSR	Res.	Res.	Res.	Res.	Res.	Res.	Res.	Res.	Res.	Res.	Res.	Res.	Res.	Res.	Res.	Res.	Res.	Res.	Res.	Res.	Res.	Res.	Res.	Res.	Res.	Res.	Res.	Res.	FTNONSTOP	TCPRESENT	FTSTOPPED	FLINPROG
	Reset value																													1	0	0	0
0x304	TPIU_FFCR	Res.	Res.	Res.	Res.	Res.	Res.	Res.	Res.	Res.	Res.	Res.	Res.	Res.	Res.	Res.	Res.	Res.	Res.	Res.	Res.	Res.	Res.	Res.	TRIGIN	Res.	Res.	Res.	Res.	Res.	Res.	ENFCONT	Res.
	Reset value																								1							1	
0x308	TPIU_FSCR	Res.	Res.	Res.	Res.	Res.	Res.	Res.	Res.	Res.	Res.	Res.	Res.	Res.	Res.	Res.	Res.	Res.	Res.	Res.	Res.	CYCCOUNT[11:0]											
	Reset value																					0	0	0	0	0	0	0	0	0	0	0	0
0xFA0	TPIU_CLAIMSETR	Res.	Res.	Res.	Res.	Res.	Res.	Res.	Res.	Res.	Res.	Res.	Res.	Res.	Res.	Res.	Res.	Res.	Res.	Res.	Res.	Res.	Res.	Res.	Res.	Res.	Res.	Res.	Res.	CLAIMSET[3:0]			
	Reset value																													1	1	1	1
0xFA4	TPIU_CLAIMCLR	Res.	Res.	Res.	Res.	Res.	Res.	Res.	Res.	Res.	Res.	Res.	Res.	Res.	Res.	Res.	Res.	Res.	Res.	Res.	Res.	Res.	Res.	Res.	Res.	Res.	Res.	Res.	Res.	CLAIMCLR[3:0]			
	Reset value																													0	0	0	0
0xFC8	TPIU_DEVIDR	Res.	Res.	Res.	Res.	Res.	Res.	Res.	Res.	Res.	Res.	Res.	Res.	Res.	Res.	Res.	Res.	Res.	Res.	Res.	Res.	SWONRZ	SWOMAN	TCLKDATA	FIFOSIZE[2:0]			CLKRELAT	MUXNUM[4:0]				
	Reset value																					1	1	0	0	1	0	1	0	0	0	0	1
0xFD0	TPIU_DEVTYPER	Res.	Res.	Res.	Res.	Res.	Res.	Res.	Res.	Res.	Res.	Res.	Res.	Res.	Res.	Res.	Res.	Res.	Res.	Res.	Res.	Res.	Res.	Res.	Res.	SUBTYPE [3:0]				MAJORTYPE [3:0]			
	Reset value																									0	0	0	1	0	0	0	1
0xFD0	TPIU_PIDR4	Res.	Res.	Res.	Res.	Res.	Res.	Res.	Res.	Res.	Res.	Res.	Res.	Res.	Res.	Res.	Res.	Res.	Res.	Res.	Res.	Res.	Res.	Res.	Res.	4KCOUNT [3:0]				JEP106CON [3:0]			
	Reset value																									0	0	0	0	0	1	0	0

Table 230. CPU1 TPIU register map and reset values (continued)

Offset	Register name	31	30	29	28	27	26	25	24	23	22	21	20	19	18	17	16	15	14	13	12	11	10	9	8	7	6	5	4	3	2	1	0
0xFD4	TPIU_PIDR5	Res.	Res.	Res.	Res.	Res.	Res.	Res.	Res.	Res.	Res.	Res.	Res.	Res.	Res.	Res.	Res.	Res.	Res.	Res.	Res.	Res.	Res.	Res.	Res.	Res.	Res.	Res.	Res.	Res.	Res.	Res.	Res.
	Reset value																																
0xFD8	TPIU_PIDR6	Res.	Res.	Res.	Res.	Res.	Res.	Res.	Res.	Res.	Res.	Res.	Res.	Res.	Res.	Res.	Res.	Res.	Res.	Res.	Res.	Res.	Res.	Res.	Res.	Res.	Res.	Res.	Res.	Res.	Res.	Res.	Res.
	Reset value																																
0xFDC	TPIU_PIDR7	Res.	Res.	Res.	Res.	Res.	Res.	Res.	Res.	Res.	Res.	Res.	Res.	Res.	Res.	Res.	Res.	Res.	Res.	Res.	Res.	Res.	Res.	Res.	Res.	Res.	Res.	Res.	Res.	Res.	Res.	Res.	Res.
	Reset value																																
0xFE0	TPIU_PIDR0	Res.	Res.	Res.	Res.	Res.	Res.	Res.	Res.	Res.	Res.	Res.	Res.	Res.	Res.	Res.	Res.	Res.	Res.	Res.	Res.	Res.	Res.	Res.	Res.	PARTNUM[7:0]							
	Reset value																									1	0	1	0	0	0	0	1
0xFE4	TPIU_PIDR1	Res.	Res.	Res.	Res.	Res.	Res.	Res.	Res.	Res.	Res.	Res.	Res.	Res.	Res.	Res.	Res.	Res.	Res.	Res.	Res.	Res.	Res.	Res.	Res.	JEP106ID [3:0]				PARTNUM [11:8]			
	Reset value																									1	0	1	1	1	0	0	1
0xFE8	TPIU_PIDR2	Res.	Res.	Res.	Res.	Res.	Res.	Res.	Res.	Res.	Res.	Res.	Res.	Res.	Res.	Res.	Res.	Res.	Res.	Res.	Res.	Res.	Res.	Res.	Res.	REVISION [3:0]				JEDEC	JEP106ID [6:4]		
	Reset value																									0	0	0	0	1	0	1	1
0xFEC	TPIU_PIDR3	Res.	Res.	Res.	Res.	Res.	Res.	Res.	Res.	Res.	Res.	Res.	Res.	Res.	Res.	Res.	Res.	Res.	Res.	Res.	Res.	Res.	Res.	Res.	Res.	REVAND[3:0]				CMOD[3:0]			
	Reset value																									0	0	0	0	0	0	0	0
0xFF0	TPIU_CIDR0	Res.	Res.	Res.	Res.	Res.	Res.	Res.	Res.	Res.	Res.	Res.	Res.	Res.	Res.	Res.	Res.	Res.	Res.	Res.	Res.	Res.	Res.	Res.	Res.	PREAMBLE[7:0]							
	Reset value																									0	0	0	0	1	1	0	1
0xFF4	TPIU_CIDR1	Res.	Res.	Res.	Res.	Res.	Res.	Res.	Res.	Res.	Res.	Res.	Res.	Res.	Res.	Res.	Res.	Res.	Res.	Res.	Res.	Res.	Res.	Res.	Res.	CLASS[3:0]				PREAMBLE [11:8]			
	Reset value																									1	0	0	1	0	0	0	0
0xFF8	TPIU_CIDR2	Res.	Res.	Res.	Res.	Res.	Res.	Res.	Res.	Res.	Res.	Res.	Res.	Res.	Res.	Res.	Res.	Res.	Res.	Res.	Res.	Res.	Res.	Res.	Res.	PREAMBLE[19:12]							
	Reset value																									0	0	0	0	0	1	0	1
0xFFC	TPIU_CIDR3	Res.	Res.	Res.	Res.	Res.	Res.	Res.	Res.	Res.	Res.	Res.	Res.	Res.	Res.	Res.	Res.	Res.	Res.	Res.	Res.	Res.	Res.	Res.	Res.	PREAMBLE[27:20]							
	Reset value																									1	0	1	1	0	0	0	1

33.18 CPU1 cross trigger interface (CTI)

See *Section 33.6: Cross trigger interface (CTI) and matrix (CTM)*.

33.19 References

1. IHI 0031C (ID080813) - Arm® Debug Interface Architecture Specification ADIv5.0 to ADIv5.2, Issue C, 8 Aug 2013
2. DDI 0480F (ID100313) - Arm® CoreSight™ SoC-400 r3p2 Technical Reference Manual, Issue G, 16 March 2015
3. DDI 0461B (ID010111) - Arm® CoreSight™ Trace Memory Controller r0p1 Technical Reference Manual, Issue B, 10 Dec 2010
4. DDI 0314H - Arm® CoreSight™ Components Technical Reference Manual, Issue H, 10 July, 2009
5. DDI 0403D (ID100710) - Arm®v7-M Architecture Reference Manual, Issue E.b, 2 December 2014

34 Device electronic signature

The device electronic signature is stored in the System memory area of the Flash memory module, and can be read using the debug interface or by the CPU. It contains factory-programmed identification and calibration data that allow the user firmware or other external devices to automatically match the characteristics of the microcontroller.

34.1 Unique device ID register (96 bits)

The unique device identifier is ideally suited:

- for use as serial number
- for use as part of the security keys, to increase the security of code in Flash memory while using and combining this unique ID with software cryptographic primitives and protocols before programming the memory
- to activate processes such as secure boot.

The 96-bit unique device identifier provides a reference number, unique for a given device and in any context. These bits cannot be altered by the user.

Base address: 0x1FFF 7590

Address offset: 0x00

Read only = 0xXXXX XXXX, where X is factory-programmed

31	30	29	28	27	26	25	24	23	22	21	20	19	18	17	16
UID(31:16)															
r	r	r	r	r	r	r	r	r	r	r	r	r	r	r	r
15	14	13	12	11	10	9	8	7	6	5	4	3	2	1	0
UID(15:0)															
r	r	r	r	r	r	r	r	r	r	r	r	r	r	r	r

Bits 31:0 **UID[31:0]:** X and Y coordinates on the wafer expressed in BCD format

Address offset: 0x04

Read only = 0xXXXX XXXX, where X is factory-programmed

31	30	29	28	27	26	25	24	23	22	21	20	19	18	17	16
UID[63:48]															
r	r	r	r	r	r	r	r	r	r	r	r	r	r	r	r
15	14	13	12	11	10	9	8	7	6	5	4	3	2	1	0
UID[47:32]															
r	r	r	r	r	r	r	r	r	r	r	r	r	r	r	r

Bits 31:8 **UID[63:40]:** LOT_NUM[23:0]
Lot number (ASCII encoded)

Bits 7:0 **UID[39:32]:** WAF_NUM[7:0]
Wafer number (8-bit unsigned number)

Address offset: 0x08

Read only = 0xXXXX XXXX, where X is factory-programmed

31	30	29	28	27	26	25	24	23	22	21	20	19	18	17	16
UID[95:80]															
r	r	r	r	r	r	r	r	r	r	r	r	r	r	r	r
15	14	13	12	11	10	9	8	7	6	5	4	3	2	1	0
UID[79:64]															
r	r	r	r	r	r	r	r	r	r	r	r	r	r	r	r

Bits 31:0 **UID[95:64]:** LOT_NUM[55:24]
Lot number (ASCII encoded)

34.2 Memory size data register

34.2.1 Flash size data register

Base address: 0x1FFF 75E0

Address offset: 0x00

Read only = 0xXXXX, where X is factory-programmed

15	14	13	12	11	10	9	8	7	6	5	4	3	2	1	0
FLASH_SIZE															
r	r	r	r	r	r	r	r	r	r	r	r	r	r	r	r

Bits 15:0 **FLASH_SIZE[15:0]**: Flash memory size
Indicates the size of the device Flash memory, expressed in Kbytes.
As an example, 0x040 corresponds to 64 Kbytes.

34.3 Package data register

Base address: 0x1FFF 7500

Address offset: 0x00

Read only = 0xXXXX, where X is factory-programmed

15	14	13	12	11	10	9	8	7	6	5	4	3	2	1	0
Res.	Res.	Res.	Res.	Res.	Res.	Res.	Res.	Res.	Res.	PKG[5:0]					
										r	r	r	r	r	r

Bits 15:6 Reserved, must be kept at reset value.

Bits 5:0 **PKG[5:0]**: Package type
101010: CSP49
001010: UFQFPN48
010111: UFQFPN48E
Others: reserved

34.4 Part number codification register

Base address: 0x1FFF 77DC

Address offset: 0x00

Read only = 0xXXXX XXXX, where X is factory-programmed

31	30	29	28	27	26	25	24	23	22	21	20	19	18	17	16
CODIFICATION[31:16]															
r	r	r	r	r	r	r	r	r	r	r	r	r	r	r	r
15	14	13	12	11	10	9	8	7	6	5	4	3	2	1	0
CODIFICATION[15:0]															
r	r	r	r	r	r	r	r	r	r	r	r	r	r	r	r

Bits 31:0 **CODIFICATION[31:0]**: Part number codification
0x0000 3531 STMicroelectronics STM32WB15xx part number codification

35 Important security notice

The STMicroelectronics group of companies (ST) places a high value on product security, which is why the ST product(s) identified in this documentation may be certified by various security certification bodies and/or may implement our own security measures as set forth herein. However, no level of security certification and/or built-in security measures can guarantee that ST products are resistant to all forms of attacks. As such, it is the responsibility of each of ST's customers to determine if the level of security provided in an ST product meets the customer needs both in relation to the ST product alone, as well as when combined with other components and/or software for the customer end product or application. In particular, take note that:

- ST products may have been certified by one or more security certification bodies, such as Platform Security Architecture (www.psacertified.org) and/or Security Evaluation standard for IoT Platforms (www.trustcb.com). For details concerning whether the ST product(s) referenced herein have received security certification along with the level and current status of such certification, either visit the relevant certification standards website or go to the relevant product page on *www.st.com* for the most up to date information. As the status and/or level of security certification for an ST product can change from time to time, customers should re-check security certification status/level as needed. If an ST product is not shown to be certified under a particular security standard, customers should not assume it is certified.
- Certification bodies have the right to evaluate, grant and revoke security certification in relation to ST products. These certification bodies are therefore independently responsible for granting or revoking security certification for an ST product, and ST does not take any responsibility for mistakes, evaluations, assessments, testing, or other activity carried out by the certification body with respect to any ST product.
- Industry-based cryptographic algorithms (such as AES, DES, or MD5) and other open standard technologies which may be used in conjunction with an ST product are based on standards which were not developed by ST. ST does not take responsibility for any flaws in such cryptographic algorithms or open technologies or for any methods which have been or may be developed to bypass, decrypt or crack such algorithms or technologies.
- While robust security testing may be done, no level of certification can absolutely guarantee protections against all attacks, including, for example, against advanced attacks which have not been tested for, against new or unidentified forms of attack, or against any form of attack when using an ST product outside of its specification or intended use, or in conjunction with other components or software which are used by customer to create their end product or application. ST is not responsible for resistance against such attacks. As such, regardless of the incorporated security features and/or any information or support that may be provided by ST, each customer is solely responsible for determining if the level of attacks tested for meets their needs, both in relation to the ST product alone and when incorporated into a customer end product or application.
- All security features of ST products (inclusive of any hardware, software, documentation, and the like), including but not limited to any enhanced security features added by ST, are provided on an "AS IS" BASIS. AS SUCH, TO THE EXTENT PERMITTED BY APPLICABLE LAW, ST DISCLAIMS ALL WARRANTIES, EXPRESS OR IMPLIED, INCLUDING BUT NOT LIMITED TO THE IMPLIED WARRANTIES OF MERCHANTABILITY OR FITNESS FOR A PARTICULAR PURPOSE, unless the applicable written and signed contract terms specifically provide otherwise.

36 Revision history

Table 231. Document revision history

Date	Revision	Changes
28-Feb-2020	1	Initial release.
13-Sep-2020	2	Updated *Section 1.1: General information*, sections *2.1.1: S0: CPU1 (CPU1 Cortex®-M4) I-bus* to *2.1.3: S2: CPU1 (CPU1 Cortex®-M4) S-bus*, *User and read protection option bytes*, *Section 3.10.7: Flash memory option register (FLASH_OPTR)*, *Section 6.4.9: Standby mode*, *Section 8.1.2: System reset*, *Section 8.2.14: ADC clock*, *Section 8.4.3: RCC clock configuration register (RCC_CFGR)*, *Section 8.4.4: RCC PLL configuration register (RCC_PLLCFGR)*, *Section 8.4.10: RCC AHB2 peripheral reset register (RCC_AHB2RSTR)*, *Section 8.4.14: RCC APB2 peripheral reset register (RCC_APB2RSTR)*, *Section 8.4.17: RCC AHB2 peripheral clock enable register (RCC_AHB2ENR)*, *Section 8.4.21: RCC APB2 peripheral clock enable register (RCC_APB2ENR)*, *Section 8.4.23: RCC AHB2 peripheral clocks enable in Sleep modes register (RCC_AHB2SMENR)*, *Section 8.4.27: RCC APB2 peripheral clocks enable in Sleep mode register (RCC_APB2SMENR)*, *Section 8.4.34: RCC CPU2 AHB2 peripheral clock enable register (RCC_C2AHB2ENR)*, *Section 8.4.38: RCC CPU2 APB2 peripheral clock enable register (RCC_C2APB2ENR)*, *Section 8.4.41: RCC CPU2 AHB2 peripheral clocks enable in Sleep modes register (RCC_C2AHB2SMENR)*, *Section 8.4.45: RCC CPU2 APB2 peripheral clocks enable in Sleep mode register (RCC_C2APB2SMENR)*, *Section 9.3.2: I/O pin alternate function multiplexer and mapping*, sections *9.4.1: GPIO port mode register (GPIOx_MODER) (x =A to C and E, H)* to *9.4.11: GPIO port bit reset register (GPIOx_BRR) (x = A to C and E, H)*, *Section 10.2.11: SYSCFG SRAM2 write protection register 2 (SYSCFG_SWPR2)*, *Section 10.2.12: SYSCFG CPU1 interrupt mask register 1 (SYSCFG_IMR1)*, *Section 17.3.4: Charge transfer acquisition sequence*, *Section 15.1: Introduction*, *Section 15.2: ADC main features*, *Section 15.3.7: Configuring the ADC*, *Calculating the actual V_{DDA} voltage using the internal reference voltage*, *Converting a supply-relative ADC measurement to an absolute voltage value*, *Section 15.10: ADC interrupts*, *Section 15.11.1: ADC interrupt and status register (ADC_ISR)*, *Section 15.11.4: ADC configuration register 1 (ADC_CFGR1)*, *Section 15.11.5: ADC configuration register 2 (ADC_CFGR2)*, *Section 16.6.1: Comparator 1 control and status register (COMP1_CSR)*, *Section 20.3.3: PKA reset and clocks*, *Montgomery space and fast mode operations*, *Enabling/disabling PKA*, *Using precomputed Montgomery parameters (PKA fast mode)*, sections *20.7.2: PKA status register (PKA_SR)* to *20.7.4: PKA RAM*, *Section 22.4.2: TIM2 control register 2 (TIM2_CR2)*, *Section 22.4.8: TIM2 capture/compare mode register 1 [alternate] (TIM2_CCMR1)*, *Section 23.7.1: LPTIM interrupt and status register (LPTIM_ISR)*, *Section 23.7.2: LPTIM interrupt clear register (LPTIM_ICR)*, *Section 24.6.19: RTC option register (RTC_OR)*, *Section 33.8.2: DBGMCU configuration register (DBGMCU_CR)*, *Section 33.8.4: DBGMCU CPU2 APB1 peripheral freeze register 1 (DBGMCU_C2APB1FZR1)*, *Section 33.8.6: DBGMCU CPU2 APB1 peripheral freeze register 2 (DBGMCU_C2APB1FZR2)*, and *Section 33.8.8: DBGMCU CPU2 APB2 peripheral freeze register (DBGMCU_C2APB2FZR)*.

Table 231. Document revision history (continued)

Date	Revision	Changes
13-Sep-2020	2 (cont'd)	Removed former *Section 15.7.2: Description of analog watchdog 2 and 3*, *Section 15.8: Oversampler*, *Section 15.12.8: ADC watchdog threshold register (ADC_AWD2T)*, *Section 15.12.13: ADC Analog Watchdog 2 Configuration register (ADC_AWD2CR)*, and *Section 15.12.14: ADC Analog Watchdog 3 Configuration register (ADC_AWD3CR)*. Updated *Figure 2: Memory map*, *Figure 5: Radio system block diagram*, *Figure 14: Simplified diagram of the reset circuit*, footnote *3* of *Figure 15: Clock tree*, *Figure 63: Charge transfer acquisition sequence*, and *Figure 31: ADC block diagram*. Updated *Table 1: Memory map and peripheral register boundary addresses*, *Table 3: Flash memory - Single bank organization*, *Table 9: Option bytes organization*, *Table 18: Flash interface register map and reset values*, *Table 25: Functionalities depending on system operating mode*, *Table 40: RCC register map and reset values*, *Table 42: GPIO register map and reset values*, *Table 43: SYSCFG register map and reset values*, *Table 56: CPU1 vector table*, *Table 58: Wakeup interrupt table*, *Table 73: ADC interrupts*, *Table 74: ADC register map and reset values*, *Table 125: Modular exponentiation computation times*, *Table 130: Montgomery parameters average computation times*, *Table 141: Output control bit for standard OCx channels*, and *Table 153: RTC register map and reset values*. Added *Table 129: Point on elliptic curve Fp check average computation times*. Minor text edits across the whole document.
09-Feb-2021	3	Updated document title, *Introduction*, *Section 3.10.6: Flash memory ECC register (FLASH_ECCR)*, *Section 4.1: Introduction*, *Section 4.2: Main features*. *Section 6.6.11: PWR Port B pull-up control register (PWR_PUCRB)*, *Section 6.6.12: PWR Port B pull-down control register (PWR_PDCRB)*, *Section 7.3.3: From ADC (ADC1) to timer (TIM1)*, *Section 8.2: Clocks*, *Section 8.4.1: RCC clock control register (RCC_CR)*, *Section 8.4.3: RCC clock configuration register (RCC_CFGR)*, sections *9.4.1: GPIO port mode register (GPIOx_MODER) (x =A to C and E, H)* to *9.4.8: GPIO port configuration lock register (GPIOx_LCKR) (x = A to C and E, H)*, *Section 9.4.10: GPIO alternate function high register (GPIOx_AFRH) (x = A to C and E, H)*, *Section 9.4.11: GPIO port bit reset register (GPIOx_BRR) (x = A to C and E, H)*, *Section 12.4.4: DMAMUX request line multiplexer*, *Section 14.5.9: EXTI CPU wakeup with interrupt mask register (EXTI_IMR1)*, *Section 14.5.9: EXTI CPU wakeup with interrupt mask register (EXTI_IMR1)*, *Section 14.5.13: EXTI CPU wakeup with interrupt mask register (EXTI_IMR2)*, *Section 14.5.15: EXTI CPU wakeup with event mask register (EXTI_EMR2)*, *Section 14.5.16: EXTI CPU2 wakeup with event mask register (EXTI_C2EMR2)*, *Section 20.3.4: PKA public key acceleration*, *Section 20.4.5: Modular and Montgomery multiplication*, *Section 20.5.1: Supported elliptic curves*, *Section 21.4.23: TIM1 option register 1 (TIM1_OR1)*, *Section 28.2: USART main features*, *Section 32.4.1: HSEM register semaphore x (HSEM_Rx)*, and *Section 32.4.2: HSEM read lock register semaphore x (HSEM_RLRx)*. Added *Note:* in *Section 23.4.6: Trigger multiplexer* and footnote to *Table 106: Montgomery multiplication*. Added *Section 28.6: USART in low-power modes* and *Section 29.5: LPUART in low-power modes*.

Table 231. Document revision history (continued)

Date	Revision	Changes
09-Feb-2021	3 (cont'd)	Updated *Figure 2: Memory map* and *Figure 118: TIM1 ETR input circuitry*. Updated *Table 1: Memory map and peripheral register boundary addresses*,*Table 34: PWR register map and reset values*, *Table 42: GPIO register map and reset values*, *Table 64: EXTI register map and reset values*, *Table 91: CTR mode initialization vector definition*, *Table 93: Initialization of AES_IVRx registers in GCM mode*, *Table 131: PKA interrupt requests*, *Table 182: USART interrupt requests*, and *Table 192: LPUART interrupt requests*. Minor text edits across the whole document.
08-Jun-2021	4	Updated *User and read protection option bytes*, reset values in sections *3.10.7: Flash memory option register (FLASH_OPTR)* to *3.10.14: Flash memory IPCC mailbox data buffer address register (FLASH_IPCCBR)*, *Section 5.2: CRC main features*, *Polynomial programmability*, *Section 5.4: CRC registers*, *Section 6.4: Low-power modes*, *Section 6.4.4: Exiting Low-power mode*, *Section 8.2: Clocks*, *Section 8.2.6: LSI1 clock*, *Section 8.2.7: LSI2 clock*, *Section 8.4.1: RCC clock control register (RCC_CR)*, *Section 8.4.30: RCC control/status register (RCC_CSR)*, *Section 15.3.2: ADC voltage regulator (ADVREGEN)*, *Section 15.3.12: Starting conversions (ADSTART)*, *Section 23.7.4: LPTIM configuration register (LPTIM_CFGR)*, *Section 28.8.3: USART control register 2 (USART_CR2)*, *Section 29.4.14: LPUART low-power management*, *Section 29.7.3: LPUART control register 2 (LPUART_CR2)*, *Section 32.4: HSEM registers*, and *Section 33.8.1: DBGMCU identity code register (DBGMCU_IDCODE)*. Updated *Table 23: Sub-system low power wake-up sources*, *Table 25: Functionalities depending on system operating mode*, *Table 65: ADC input/output pins*, *Table 80: Acquisition sequence summary*, and *Table 218: DBGMCU register map and reset values*. Updated *Figure 6: CRC calculation unit block diagram*, *Figure 12: Low-power modes possible transitions* and added footnote to it, *Figure 15: Clock tree*, *Figure 31: ADC block diagram*, *Figure 61: Surface charge transfer analog I/O group structure*, and *Figure 96: Advanced-control timer block diagram*. Minor text edits across the whole document.

Table 231. Document revision history (continued)

Date	Revision	Changes
07-Oct-2021	5	Updated *Section 5.4.2: CRC independent data register (CRC_IDR)*, *Section 6.6.2: PWR control register 2 (PWR_CR2)*, *Section 8.2.11: Clock security system on LSE (LSECSS)*, *Section 9.3.2: I/O pin alternate function multiplexer and mapping*, *Section 15.3.3: Calibration (ADCAL)*, *DMA operation in different operating modes*, *Section 21.3.16: Using the break function*, *Section 21.4.8: TIM1 capture/compare mode register 1 [alternate] (TIM1_CCMR1)*, *Section 24.3.14: Calibration clock output*, *Section 28.5.20: RS232 hardware flow control and RS485 Driver Enable*, *Section 28.8.4: USART control register 3 (USART_CR3)*, *Communication using DMA (direct memory addressing)*, *Section 29.4.13: RS232 hardware flow control and RS485 Driver Enable*, *Section 29.7.4: LPUART control register 3 (LPUART_CR3)*, *Communication using DMA (direct memory addressing)*, and *Section 33.8.1: DBGMCU identity code register (DBGMCU_IDCODE)*. Updated *Table 20: CRC register map and reset values*. Added footnote *2* to *Table 21: Supply configuration control*. Updated *Figure 87: GCM authenticated encryption* and *Figure 119: Control circuit in normal mode, internal clock divided by 1*. Added *Section 34.4: Part number codification register*.
07-Mar-2022	6	Updated *Introduction*, *Section 6.4: Low-power modes*, *Section 6.4.4: Exiting Low-power mode*, *Section 8.2: Clocks*, *Section 8.2.6: LSI1 clock*, *Section 15.3.3: Calibration (ADCAL)*, *Section 15.3.7: Configuring the ADC*, *Section 15.8: Temperature sensor and internal reference voltage*, *Section 15.11.3: ADC control register (ADC_CR)*, *Section 15.11.4: ADC configuration register 1 (ADC_CFGR1)*, *Section 15.11.5: ADC configuration register 2 (ADC_CFGR2)*, *Section 15.11.11: ADC calibration factor (ADC_CALFACT)*, *Section 18.2: RNG main features*, and *Section 33.7.15: CTI lock access register (CTI_LAR)*. Renamed $t_{ADCVREG_SETUP}$ into $t_{ADCVREG_STUP}$ throughout *Section 15: Analog-to-digital converter (ADC)*. Updated *Table 23: Sub-system low power wake-up sources* and *Table 25: Functionalities depending on system operating mode*. Updated *Figure 12: Low-power modes possible transitions*. Minor text edits across the whole document.
03-Jun-2022	7	Updated document title, *Introduction*, *Section 3.3.1: Flash memory organization*, *CPU2 secure SRAM2 areas*, *Section 4.1: Introduction*, *Section 4.2: Main features*, *Section 8.4.29: RCC backup domain control register (RCC_BDCR)*, *Section 8.4.30: RCC control/status register (RCC_CSR)*, *Section 33.7.3: CTI application trigger set register (CTI_APPSETR)*, and *Section 33.8.2: DBGMCU configuration register (DBGMCU_CR)*. Updated *Figure 15: Clock tree*, *Figure 87: GCM authenticated encryption*, *Figure 225: Transfer bus diagrams for I2C target transmitter (mandatory events only)*, *Figure 228: Transfer bus diagrams for I2C target receiver (mandatory events only)*, and *Figure 235: Transfer bus diagrams for I2C controller transmitter (mandatory events only)*. Added *Section 35: Important security notice*. Updated *Table 196: SPI register map and reset values*. Minor text edits across the whole document.

Table 231. Document revision history (continued)

Date	Revision	Changes
31-Jan-2023	8	Added *Empty check* and Caution in *Section 3.3.6: Flash memory program and erase operations*. Updated *Section 3.3.7: Flash main memory erase sequences*, *Section 3.3.8: Flash main memory programming sequences*, note in *Section 3.6.1: Read protection (RDP)*, *Section 3.10.4: Flash memory status register (FLASH_SR)*, *Section 3.10.5: Flash memory control register (FLASH_CR)*, *Section 3.10.19: Flash memory secure SRAM2 start address and CPU2 reset vector register (FLASH_SRRVR)*, *Section 6.1: Power supplies*, *Force SMPS step-down converter Bypass mode*, *Section 6.2.2: Programmable voltage detector (PVD)*, *Section 8.1.2: System reset*, *Section 8.2.13: SMPS step-down converter clock*, *Converting a supply-relative ADC measurement to an absolute voltage value*, *Section 15.11.4: ADC configuration register 1 (ADC_CFGR1)*, *Section 21.4.7: TIM1 capture/compare mode register 1 (TIM1_CCMR1)*, *Section 22.4.7: TIM2 capture/compare mode register 1 (TIM2_CCMR1)*, *Section 26.4: WWDG interrupts*, *Section 26.5.2: WWDG configuration register (WWDG_CFR)*, and *Section 33.4.11: DP access port select register (DP_SELECTR)*. Updated *Figure 61: Surface charge transfer analog I/O group structure*, *Figure 62: Sampling capacitor voltage variation*, and *Figure 214: Watchdog block diagram*. Updated *Table 211: Debug port register map and reset values*. Minor text edits across the whole document.
18-Aug-2023	9	Updated document title, *Section 3.5: FLASH UID64*, *Section 3.10.16: Flash memory CPU2 status register (FLASH_C2SR)*, *Section 4.1: Introduction*, *Section 4.2: Main features*, *Section 6.1.2: Battery backup domain*, *Entering Stop0 mode*, *Section 6.4.8: Stop1 mode*, *Section 8.2.19: Clock-out capability*, *Section 17.3.4: Charge transfer acquisition sequence*, *Section 21.3.22: Encoder interface mode*, and *Section 22.3.15: Encoder interface mode*. Updated *Figure 2: Memory map*, *Figure 213: Independent watchdog block diagram*, *Figure 219: I2C initialization flow*, and *Figure 222: Target initialization flow*. Minor text edits across the whole document.
15-Apr-2024	10	Updated *Figure 2: Memory map* and *Figure 212: RTC block diagram*. Updated *Section 8.2.3: MSI clock*, *Temperature sensor, V_{REFINT} and V_{BAT} internal channels*, *Section 22.3.18: Timers and external trigger synchronization*, *Section 24.6.4: RTC initialization and status register (RTC_ISR)*, and *Section 27.9.1: I2C control register 1 (I2C_CR1)*. Added *Section 27.4.15: SMBus controller mode*. Added *Table 88: RNG configurations*, *Table 175: USART/UART input/output pins*, *Table 176: USART internal input/output signals*, *Table 185: LPUART input/output pins*, and *Table 186: LPUART internal input/output signals*. Minor text edits across the whole document.

Table 231. Document revision history (continued)

Date	Revision	Changes
12-Dec-2024	11	Added *Section 1.3: Register reset value*. Updated *CPU2 secure SRAM2 areas*, *Exiting Standby mode*, *Section 15.3.3: Calibration (ADCAL)*, and *Section 15.3.5: ADC clock (CKMODE, PRESC[3:0])*. Replaced master/slave with controller/target in *Section 27: Inter-integrated circuit interface (I2C)*. Updated *Figure 32: ADC calibration*, *Figure 33: Calibration factor forcing*, *Figure 39: Stopping an ongoing conversion*, *Figure 52: ADC1_AWD_OUT signal generation (on a single channel)*, *Figure 250: Start bit detection when oversampling by 16 or 8*, *Figure 266: Transmission using DMA*, and *Figure 267: Reception using DMA*. Updated *Table 166: USART features* and *Table 175: USART/UART input/output pins*. Minor text edits across the whole document.

Index

A

ADC_CALFACT 402
ADC_CCR 402
ADC_CFGR1 393
ADC_CFGR2 396
ADC_CHSELR 399
ADC_CR 391
ADC_DR 401
ADC_IER 390
ADC_ISR 389
ADC_SMPR 397
ADC_TR 398
AES_CR 483
AES_DINR 487
AES_DOUTR 487
AES_IVR0 490
AES_IVR1 490
AES_IVR2 490
AES_IVR3 491
AES_KEYR0 488
AES_KEYR1 489
AES_KEYR2 489
AES_KEYR3 489
AES_KEYR4 491
AES_KEYR5 491
AES_KEYR6 492
AES_KEYR7 492
AES_SR 486
AES_SUSPxR 492
AP_BD0-3R 1058
AP_DRWR 1058
AP_TAR 1058

B

BPU_CIDR0 1121
BPU_CIDR1 1122
BPU_CIDR2 1122
BPU_CIDR3 1123
BPU_COMPxR 1119
BPU_CTRLR 1118
BPU_PIDR0 1120
BPU_PIDR1 1120
BPU_PIDR2 1120
BPU_PIDR3 1121
BPU_PIDR4 1119
BPU_REMAPR 1118

C

C1ROM_CIDR0 1129
C1ROM_CIDR1 1129
C1ROM_CIDR2 1130
C1ROM_CIDR3 . . . . . 1130, 1132
C1ROM_MEMTYPER 1126
C1ROM_PIDR0 1127
C1ROM_PIDR1 1128
C1ROM_PIDR2 1128
C1ROM_PIDR3 1129
C1ROM_PIDR4 1127
C2ROM1_CIDR0 1094
C2ROM1_CIDR1 1095
C2ROM1_CIDR2 1095
C2ROM1_CIDR3 1095
C2ROM1_MEMTYPER 1092
C2ROM1_PIDR0 1092
C2ROM1_PIDR1 1093
C2ROM1_PIDR2 1093
C2ROM1_PIDR3 1094
C2ROM1_PIDR4 1092
C2ROM2_CIDR0 1100
C2ROM2_CIDR1 1101
C2ROM2_CIDR2 1101
C2ROM2_CIDR3 1101
C2ROM2_MEMTYPER 1098
C2ROM2_PIDR0 1098
C2ROM2_PIDR1 1099
C2ROM2_PIDR2 1099
C2ROM2_PIDR3 1100
C2ROM2_PIDR4 1098
COMP1_CSR 412
CRC_CR 126
CRC_DR 125
CRC_IDR 125
CRC_INIT 127
CRC_POL 127
CTI_APPCLEAR 1067
CTI_APPPULSER 1068
CTI_APPSETR 1066
CTI_AUTHSTATR 1073
CTI_CHINSTSR 1070
CTI_CHOUTSTSR 1070
CTI_CIDR0 1077
CTI_CIDR1 1077
CTI_CIDR2 1078
CTI_CIDR3 1078
CTI_CLAIMCLR 1072

CTI_CLAIMSETR 1071
CTI_CONTROLR 1066
CTI_DEVIDR 1074
CTI_DEVTYPER 1074
CTI_GATER 1071
CTI_INENRx 1068
CTI_INTACKR 1066
CTI_LAR 1072
CTI_LSR 1073
CTI_OUTENRx 1069
CTI_PIDR0 1075
CTI_PIDR1 1075
CTI_PIDR3 1076
CTI_PIDR4 1075
CTI_TRGISTSR 1069
CTI_TRGOSTSR 1070

D

DBGMCU_APB1FZR1 1083
DBGMCU_APB1FZR2 1085
DBGMCU_APB2FZR 1086
DBGMCU_C2APB1FZR1 1084
DBGMCU_C2APB1FZR2 1086
DBGMCU_C2APB2FZR 1087
DBGMCU_CR 1082
DBGMCU_IDCODE 1082
DMA_CCRx 305
DMA_CMARx 309
DMA_CNDTRx 307
DMA_CPARx 308
DMA_IFCR 303
DMA_ISR 301
DMAMUX_CFR 323
DMAMUX_CSR 323
DMAMUX_CxCR 322
DMAMUX_RGCFR 325
DMAMUX_RGSR 325
DMAMUX_RGxCR 324
DP_ABORTR 1047
DP_CTRL/STATR 1048
DP_DPIDR 1047
DWT_CIDR0 . . . . . .1113, 1142
DWT_CIDR1 . . . . . .1113, 1142
DWT_CIDR2 . . . . . .1113, 1142
DWT_CIDR3 . . . . . .1114, 1143
DWT_COMPxR 1109, 1138
DWT_CPICNTR 1106, 1135
DWT_CTRLR 1104, 1133
DWT_CYCCNTR 1106, 1135
DWT_EXCCNTR 1107, 1136
DWT_FOLDCNTR 1108, 1137
DWT_FUNCTxR 1109, 1138
DWT_LSUCNTR 1108, 1137
DWT_MASKxR 1109, 1138
DWT_PCSR 1108, 1137
DWT_PIDR0 . . . . . 1111, 1140
DWT_PIDR1 . . . . . 1111, 1140
DWT_PIDR2 . . . . . 1112, 1141
DWT_PIDR3 . . . . . 1112, 1141
DWT_PIDR4 . . . . . 1110, 1139
DWT_SLPCNTR 1107, 1136

E

EXTI_C2EMR1 350
EXTI_C2EMR2 352
EXTI_C2IMR1 349
EXTI_C2IMR2 351
EXTI_EMR1 350
EXTI_EMR2 352
EXTI_FTSR1 345
EXTI_FTSR2 347
EXTI_IMR1 349
EXTI_IMR2 351
EXTI_PR1 346
EXTI_PR2 348
EXTI_RTSR1 344
EXTI_RTSR2 346
EXTI_SWIER1 345
EXTI_SWIER2 347

F

FLASH_ACR 99
FLASH_C2ACR 111
FLASH_C2CR 114
FLASH_C2SR 112
FLASH_CR 102
FLASH_ECCR 104
FLASH_IPCCBR 111
FLASH_KEYR 100
FLASH_OPTKEYR 100
FLASH_OPTR 105
FLASH_PCROP1AER 108
FLASH_PCROP1ASR 108
FLASH_PCROP1BER 110
FLASH_PCROP1BSR 110
FLASH_SFR 115
FLASH_SR 101
FLASH_SRRVR 116
FLASH_WRP1AR 109
FLASH_WRP1BR 109
FPB_CIDR0 1158
FPB_CIDR1 1158

FPB_CIDR2 1158
FPB_CIDR3 1159
FPB_COMPxR 1155
FPB_CTRLR 1154
FPB_PIDR0 1156
FPB_PIDR1 1156
FPB_PIDR2 1157
FPB_PIDR3 1157
FPB_PIDR4 1155
FPB_REMAPR 1154

G

GPIOx_AFRH 270
GPIOx_AFRL 269
GPIOx_BRR 271
GPIOx_BSRR 267
GPIOx_IDR 266
GPIOx_LCKR 268
GPIOx_MODER 264
GPIOx_ODR 267
GPIOx_OSPEEDR 265
GPIOx_OTYPER 264
GPIOx_PUPDR 266

H

HSEM_CnICR 1033
HSEM_CnIER 1033
HSEM_CnISR 1033
HSEM_CnMISR 1034
HSEM_CR 1034
HSEM_KEYR 1035
HSEM_RLRx 1032
HSEM_Rx 1031

I

I2C_CR1 822
I2C_CR2 824
I2C_ICR 832
I2C_ISR 830
I2C_OAR1 826
I2C_OAR2 827
I2C_PECR 833
I2C_RXDR 833
I2C_TIMEOUTR 829
I2C_TIMINGR 828
I2C_TXDR 834
IPCC_C1CR 1018
IPCC_C1MR 1018
IPCC_C1SCR 1019
IPCC_C1TOC2SR 1019
IPCC_C2CR 1020
IPCC_C2MR 1020
IPCC_C2SCR 1021
IPCC_C2TOC1SR 1022
ITM_CIDR0 1151
ITM_CIDR1 1151
ITM_CIDR2 1151
ITM_CIDR3 1152
ITM_PIDR0 1149
ITM_PIDR1 1149
ITM_PIDR2 1150
ITM_PIDR3 1150
ITM_PIDR4 1148
ITM_STIMRx 1146
ITM_TCR 1147
ITM_TER 1146
ITM_TPR 1147
IWDG_KR 761
IWDG_PR 762
IWDG_RLR 763
IWDG_SR 764
IWDG_WINR 765

L

LPTIM_ARR 713
LPTIM_CFGR 708
LPTIM_CMP 713
LPTIM_CNT 714
LPTIM_CR 711
LPTIM_ICR 707
LPTIM_IER 707
LPTIM_ISR 706
LPTIM1_OR 714
LPTIM2_OR 715
LPUART_BRR 962
LPUART_CR1 . . . . . 951, 954
LPUART_CR2 957
LPUART_CR3 959
LPUART_ICR 970
LPUART_ISR 963, 967
LPUART_PRESC 972
LPUART_RDR 971
LPUART_RQR 962
LPUART_TDR 971

P

PKA_CLRFR 519
PKA_CR 517
PKA_SR 518
PWR_C2CR1 169
PWR_C2CR3 170

PWR_CR1 157
PWR_CR2 158
PWR_CR3 159
PWR_CR4 160
PWR_CR5 164
PWR_EXTSCR 171
PWR_PDCRA 165
PWR_PDCRB 166
PWR_PDCRC 167
PWR_PDCRE 168
PWR_PDCRH 169
PWR_PUCRA 165
PWR_PUCRB 165
PWR_PUCRC 166
PWR_PUCRE 167
PWR_PUCRH 168
PWR_SCR 163
PWR_SR1 161
PWR_SR2 162

R

RCC_AHB1ENR 218, 237
RCC_AHB1RSTR 212-213
RCC_AHB1SMENR 223, 243
RCC_AHB2ENR 219, 238
RCC_AHB2RSTR 214
RCC_AHB2SMENR 224, 244
RCC_AHB3ENR 220, 239
RCC_AHB3RSTR 215
RCC_AHB3SMENR 225, 245
RCC_APB1ENR1 . . . . . 221, 240
RCC_APB1ENR2 . . . . . 222, 241-242, 248
RCC_APB1RSTR1 216
RCC_APB1RSTR2 216
RCC_APB1SMENR1 . . . . . 226, 246
RCC_APB1SMENR2 . . . . . 227, 247
RCC_APB2ENR 222, 241
RCC_APB2RSTR 217-218
RCC_APB2SMENR 228, 247
RCC_BDCR 230
RCC_CCIPR 229
RCC_CFGR 203
RCC_CICR 211
RCC_CIER 208
RCC_CIFR 209
RCC_CR 199
RCC_CRRCR 234-235
RCC_CSR 232
RCC_ICSCR 202
RCC_PLLCFGR 205
RNG_CR 443
RNG_DR 444
RNG_SR 443
RTC_ALRMAR 743
RTC_ALRMASSR 753
RTC_ALRMBR 744
RTC_ALRMBSSR 754
RTC_BKPxR 755
RTC_CALR 750
RTC_CR 735
RTC_DR 734
RTC_ISR 738
RTC_OR 755
RTC_PRER 741
RTC_SHIFTR 746
RTC_SSR 745
RTC_TAMPCR 751
RTC_TR 733
RTC_TSDR 748
RTC_TSSSR 749
RTC_TSTR 747
RTC_WPR 745
RTC_WUTR 742

S

SPIx_CR1 1001
SPIx_CR2 1003
SPIx_CRCPR 1007
SPIx_DR 1006
SPIx_RXCRCR 1007
SPIx_SR 1005
SPIx_TXCRCR 1007
SYSCFG_C2IMR1 287
SYSCFG_C2IMR2 288
SYSCFG_CFGR1 277
SYSCFG_CFGR2 284
SYSCFG_EXTICR1 278
SYSCFG_EXTICR2 279
SYSCFG_EXTICR3 280
SYSCFG_EXTICR4 282
SYSCFG_IMR1 286
SYSCFG_IMR2 286
SYSCFG_MEMRMP 276
SYSCFG_SCSR 283
SYSCFG_SIPCR 288
SYSCFG_SKR 285
SYSCFG_SWPR1 285
SYSCFG_SWPR2 285

T

TIM1_AF1 615
TIM1_AF2 616

TIM1_ARR 603
TIM1_BDTR 606
TIM1_CCER 599
TIM1_CCMR1 593-594
TIM1_CCMR2 597-598
TIM1_CCMR3 612
TIM1_CCR1 604
TIM1_CCR2 605
TIM1_CCR3 605
TIM1_CCR4 606
TIM1_CCR5 613
TIM1_CCR6 614
TIM1_CNT 603
TIM1_CR1 582
TIM1_CR2 583
TIM1_DCR 610
TIM1_DIER 588
TIM1_DMAR 611
TIM1_EGR 592
TIM1_OR1 612
TIM1_PSC 603
TIM1_RCR 604
TIM1_SMCR 586
TIM1_SR 590
TIM1_TISEL 617
TIM2_AF1 688
TIM2_ARR 684
TIM2_CCER 682
TIM2_CCMR1 676-677
TIM2_CCMR2 680-681
TIM2_CCR1 685
TIM2_CCR2 685
TIM2_CCR3 686
TIM2_CCR4 686
TIM2_CNT 683-684
TIM2_CR1 666
TIM2_CR2 667
TIM2_DCR 687
TIM2_DIER 672
TIM2_DMAR 687
TIM2_EGR 675
TIM2_OR1 688
TIM2_PSC 684
TIM2_SMCR 669
TIM2_SR 673
TIM2_TISEL 689
TPIU_ACPR 1162
TPIU_CIDR0 1168
TPIU_CIDR1 1169
TPIU_CIDR2 1169
TPIU_CIDR3 1170
TPIU_CLAIMCLR 1165
TPIU_CLAIMSETR 1164
TPIU_CSPSR 1161
TPIU_DEVIDR 1165
TPIU_DEVTYPER 1166
TPIU_FFCR 1163
TPIU_FFSR 1163
TPIU_FSCR 1164
TPIU_PIDR0 1167
TPIU_PIDR1 1167
TPIU_PIDR2 1167
TPIU_PIDR3 1168
TPIU_PIDR4 1166
TPIU_SPPR 1162
TPIU_SSPSR 1161
TSC_CR 424
TSC_ICR 428
TSC_IER 427
TSC_IOASCR 429
TSC_IOCCR 430
TSC_IOGCSR 431
TSC_IOGxCR 431
TSC_IOHCR 429
TSC_IOSCR 430
TSC_ISR 428

U

USART_BRR 902
USART_CR1 . . . . . 887, 890
USART_CR2 894
USART_CR3 898
USART_GTPR 902
USART_ICR 916
USART_ISR 905, 911
USART_PRESC 919
USART_RDR 918
USART_RQR 904
USART_RTOR 903
USART_TDR 918

W

WWDG_CFR 771
WWDG_CR 771
WWDG_SR 772

IMPORTANT NOTICE – READ CAREFULLY

STMicroelectronics NV and its subsidiaries (“ST”) reserve the right to make changes, corrections, enhancements, modifications, and improvements to ST products and/or to this document at any time without notice. Purchasers should obtain the latest relevant information on ST products before placing orders. ST products are sold pursuant to ST’s terms and conditions of sale in place at the time of order acknowledgment.

Purchasers are solely responsible for the choice, selection, and use of ST products and ST assumes no liability for application assistance or the design of purchasers’ products.

No license, express or implied, to any intellectual property right is granted by ST herein.

Resale of ST products with provisions different from the information set forth herein shall void any warranty granted by ST for such product.

ST and the ST logo are trademarks of ST. For additional information about ST trademarks, refer to *www.st.com/trademarks*. All other product or service names are the property of their respective owners.

Information in this document supersedes and replaces information previously supplied in any prior versions of this document.

© 2024 STMicroelectronics – All rights reserved