USB/UART

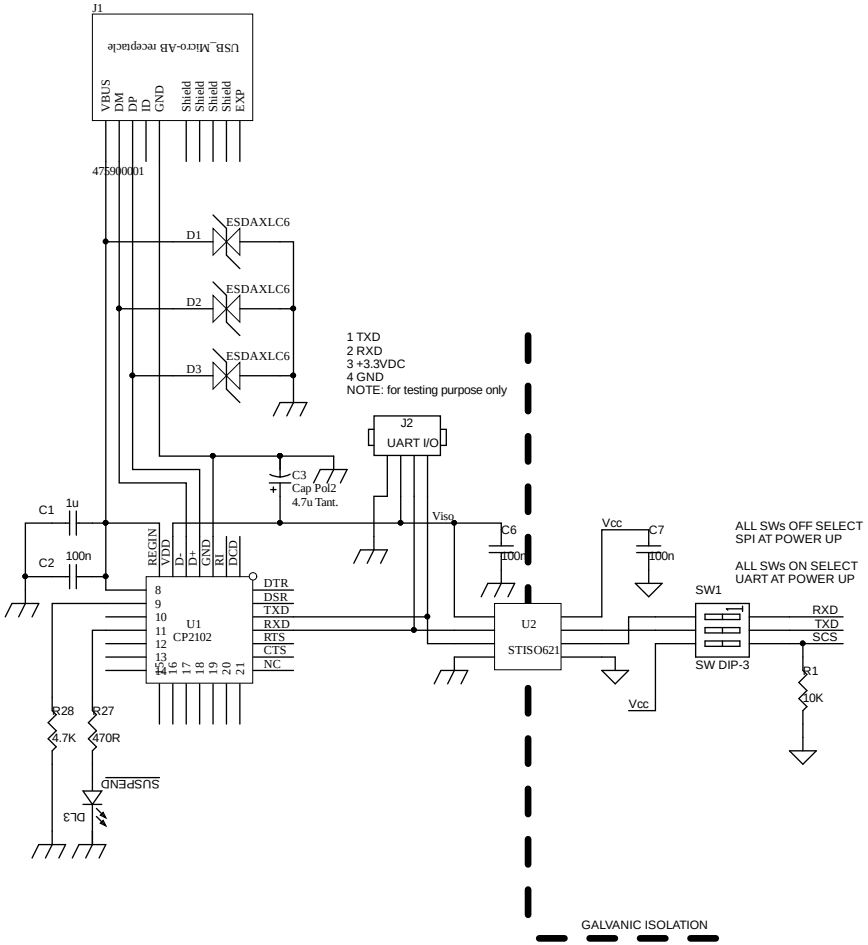

METROLOGY CIRCUIT

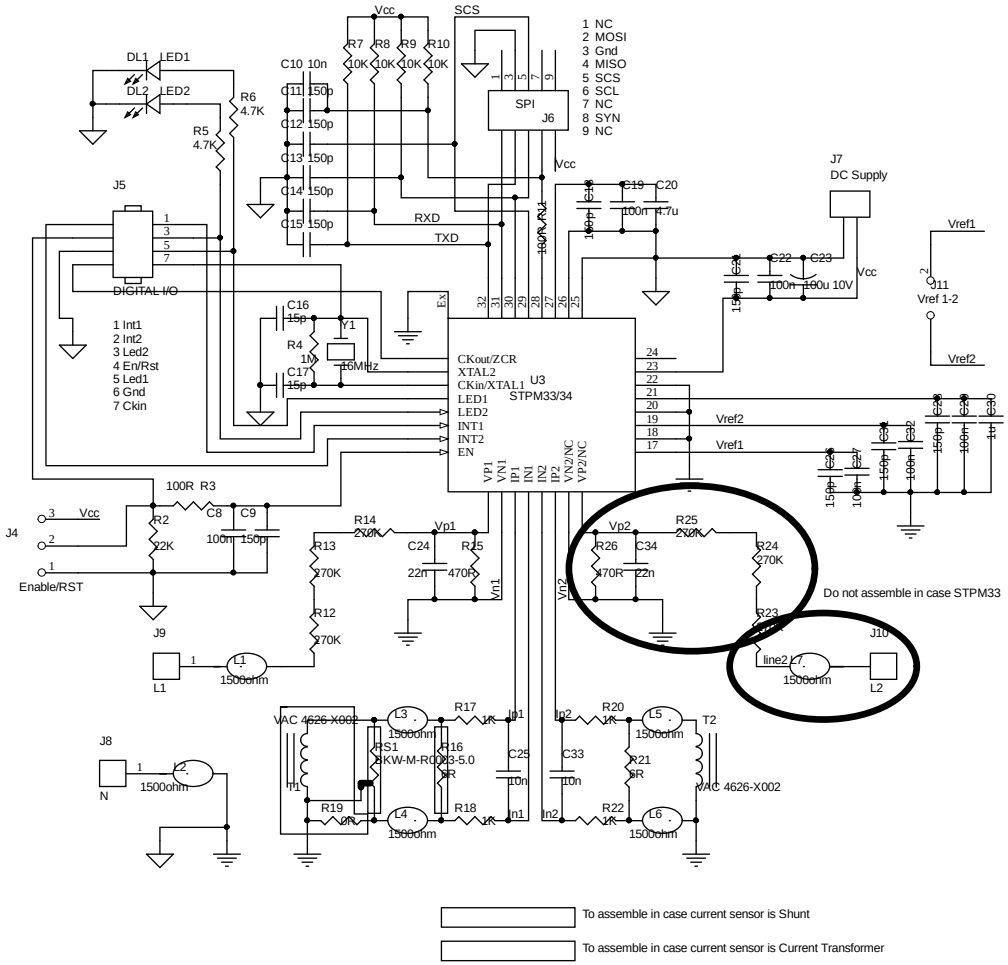

Title		
Size: A4	Number:	Revision:
Date:	Time:	Sheet of
File: EVALSTPM33-34 V3.SchDoc		

life.augmented