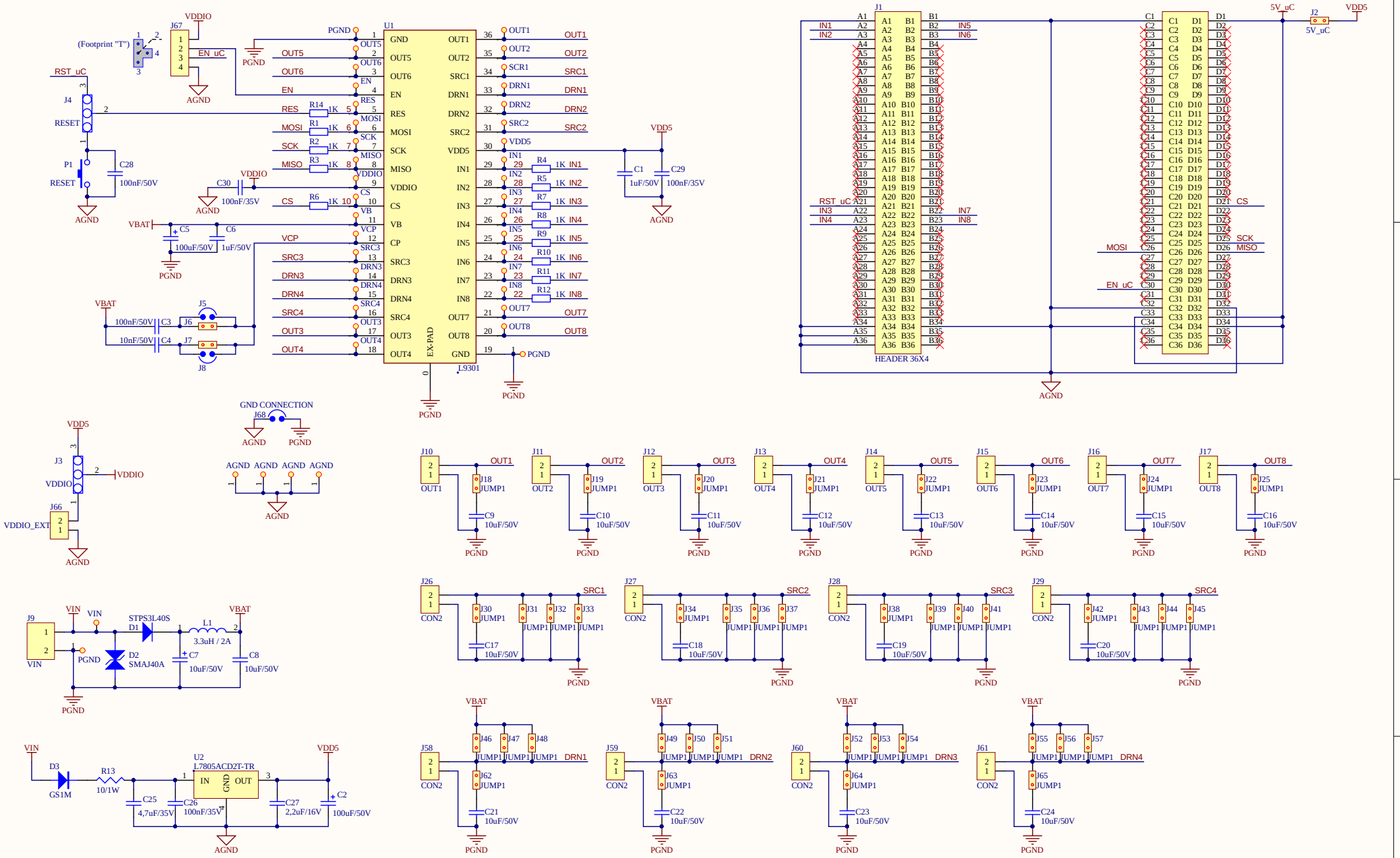

Title	L9301 EVALUATION BOARD	
Size A3	Number EVAL-L9301	Revision 0
Date: 22/01/2018	Sheet1 of 1	
File: S:\ASD637 L9301 Demo Board\..\ASD637 L9301.SchDoc	Drawn by:	