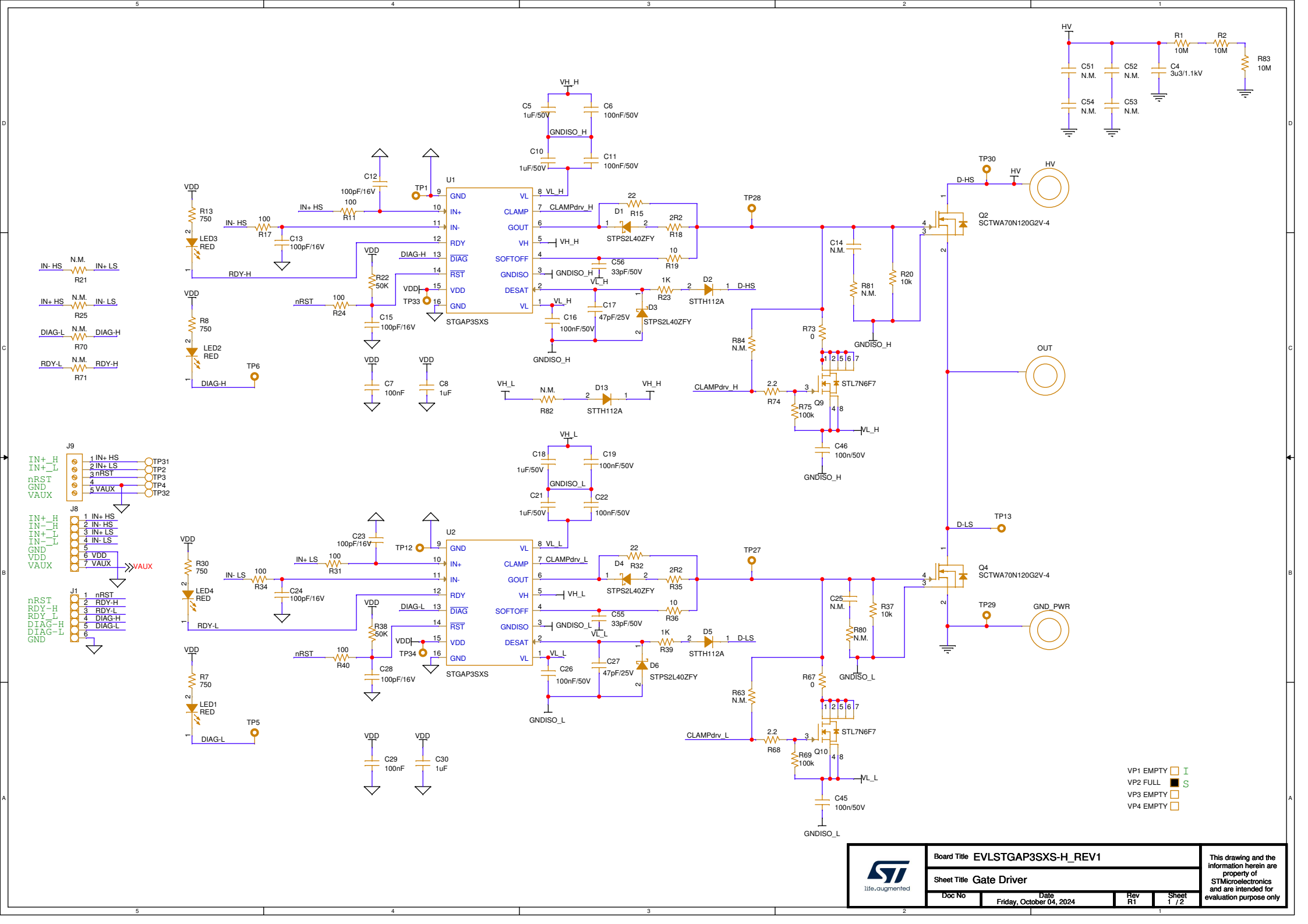

Board Title	EVLSTGAP3SXS-H_REV1		
Sheet Title	Gate Driver		
Doc No	Date: Friday, October 04, 2024	Rev: R1	Sheet: 1 / 2

This drawing and the information herein are property of STMicroelectronics and are intended for evaluation purpose only

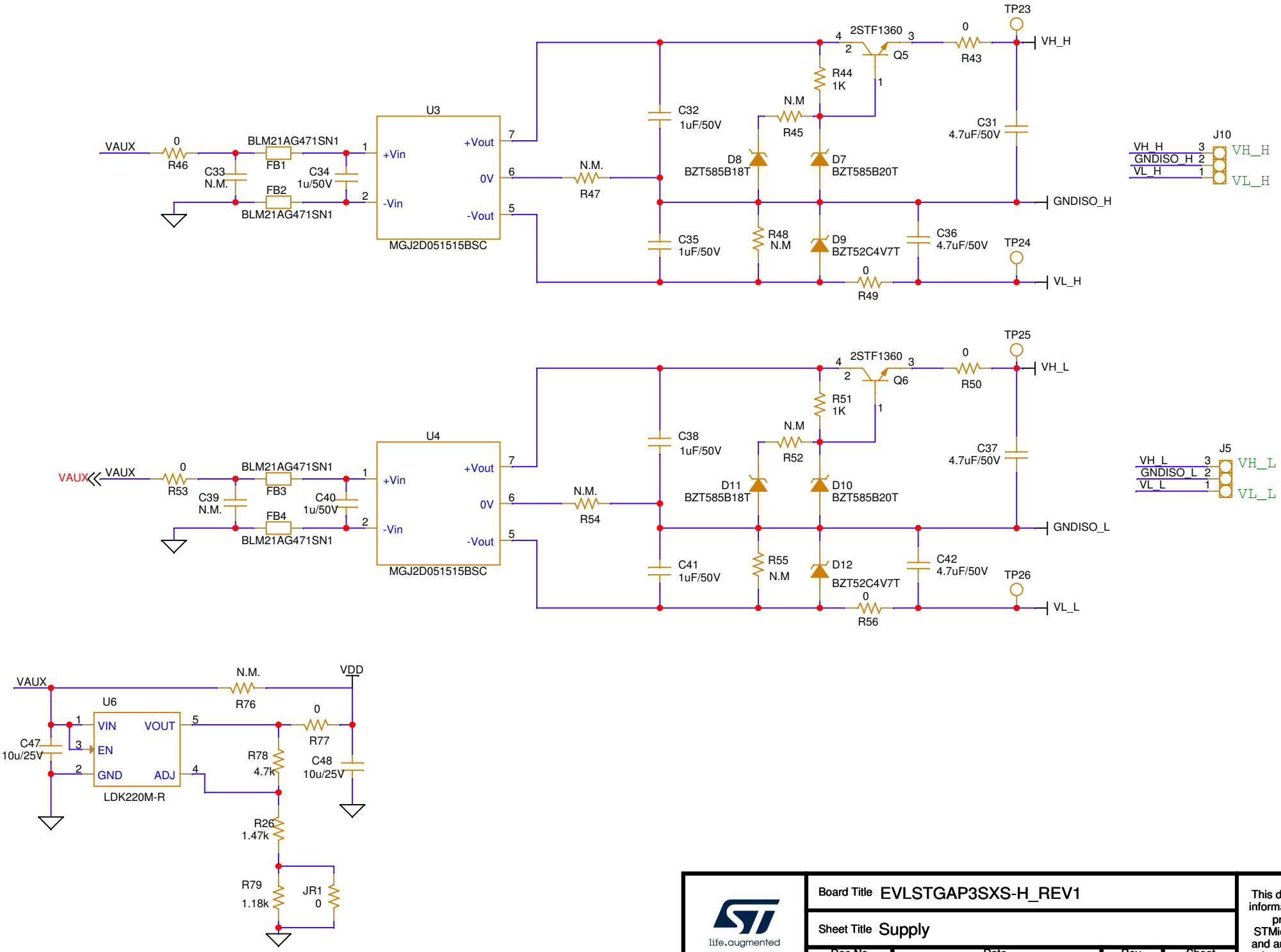

life.augmented	Board Title EVLSTGAP3SXS-H_REV1		This drawing and the information herein are property of STMicroelectronics and are intended for evaluation purpose only
	Sheet Title Supply		
Doc No	Date Friday, October 04, 2024	Rev R1	Sheet 2 /2