STM32WB5MM Discovery Kit

MB1292

Table of contents

Sheet 1: Project overview (this page)

Sheet 2: Top

Sheet 3: Microcontroller and OLED display

Sheet 4: MEMS sensors

Sheet 5: LEDs, touchkey and push-buttons

Sheet 6: Connectors

Sheet 7: Power management

Sheet 8: ST-Link V2-1

Legend

General comment such as function title, configuration, ...

Text to be added to silkscreen.

Warning text.

Notes to generate the board layout.

Open Platform License Agreement

The Open Platform License Agreement (“Agreement”) is a binding legal contract between you ("You") and STMicroelectronics International N.V. (“ST”), a company incorporated under the laws of the Netherlands acting for the purpose of this Agreement through its Swiss branch 39, Chemin du Champ des Filles, 1228 Plan-les-Ouates, Geneva, Switzerland.

By using the enclosed reference designs, schematics, PC board layouts, and documentation, in hardcopy or CAD tool file format (collectively, the “Reference Material”), You are agreeing to be bound by the terms and conditions of this Agreement. Do not use the Reference Material until You have read and agreed to this Agreement terms and conditions. The use of the Reference Material automatically implies the acceptance of the Agreement terms and conditions.

The complete Open Platform License Agreement can be found on www.st.com/opla.

U_TOP
Top.SchDoc

HW6
STICKER PRODUCT
Sticker product

HW7
STICKER BOARD
Sticker board

Title: **Project overview**		
Project: **STM32WB5MM Discovery Kit**		
Variant: WB5MM		
Revision: B-01		Reference: MB1292
Size: A4	Date: 27-Nov-20	Sheet: 1 of 8

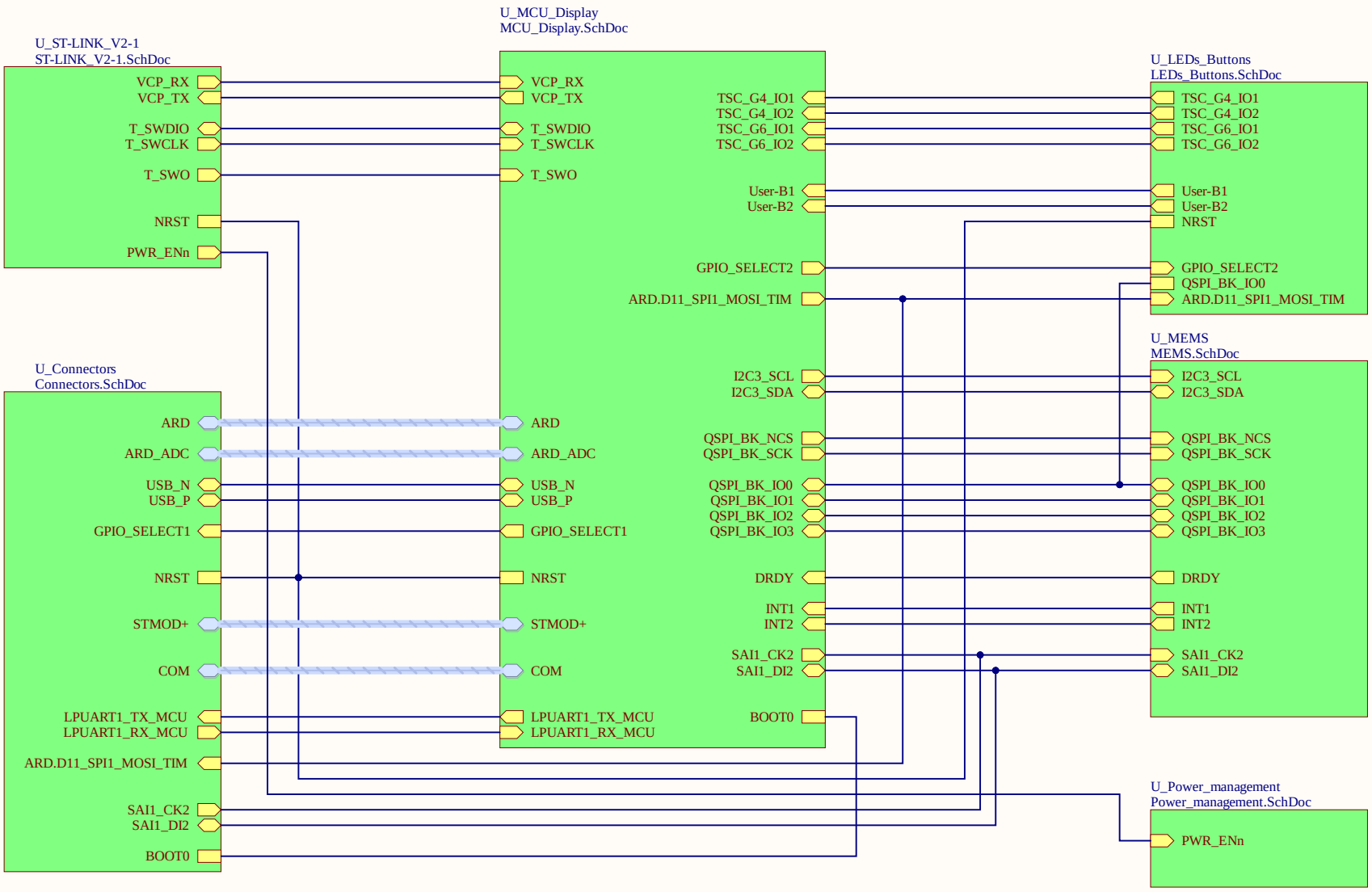

Title: **Top**		
Project: **STM32WB5MM Discovery Kit**		
Variant: WB5MM		
Revision: B-01		Reference: MB1292
Size: A4	Date: 27-Nov-20	Sheet: 2 of 8

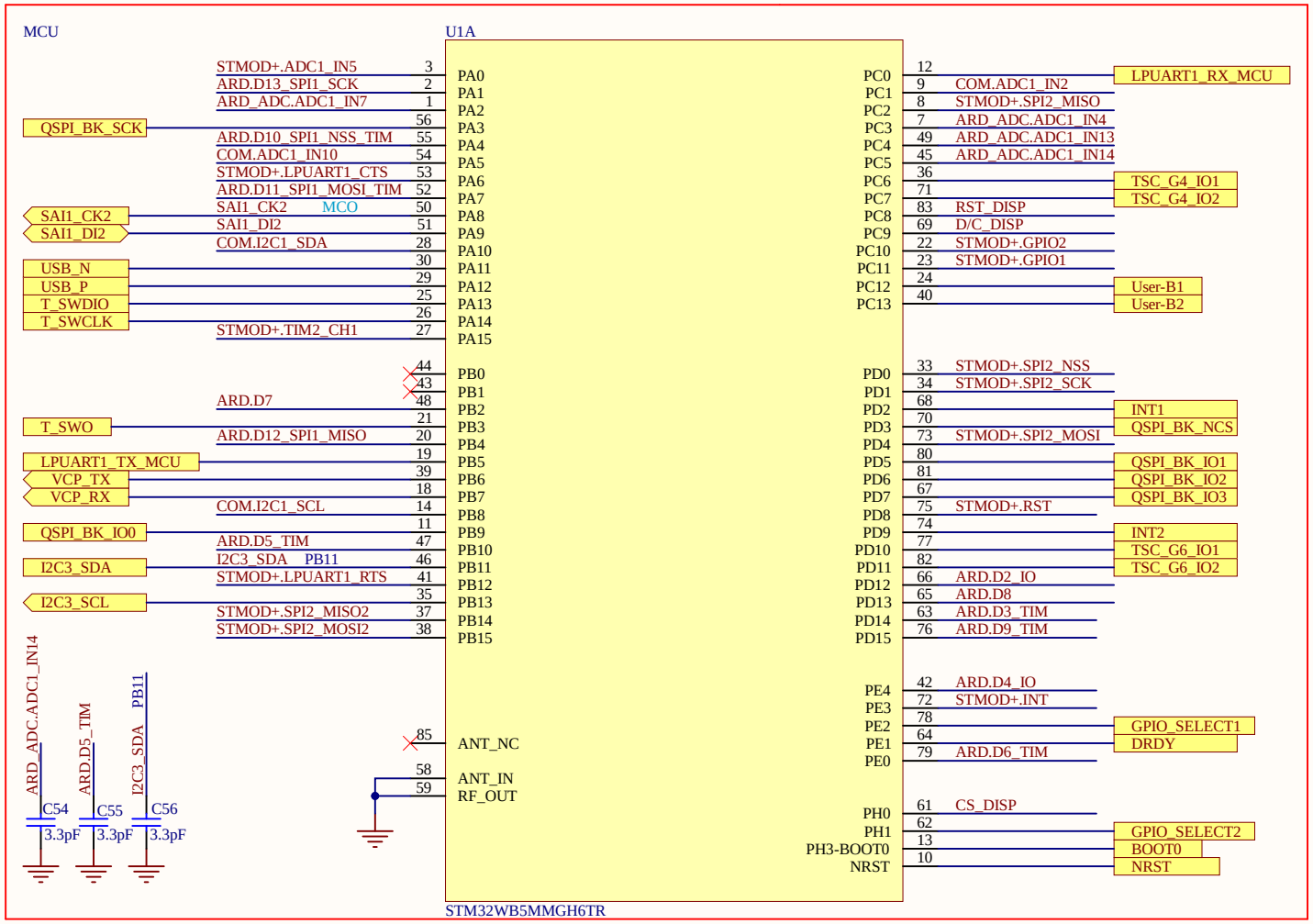

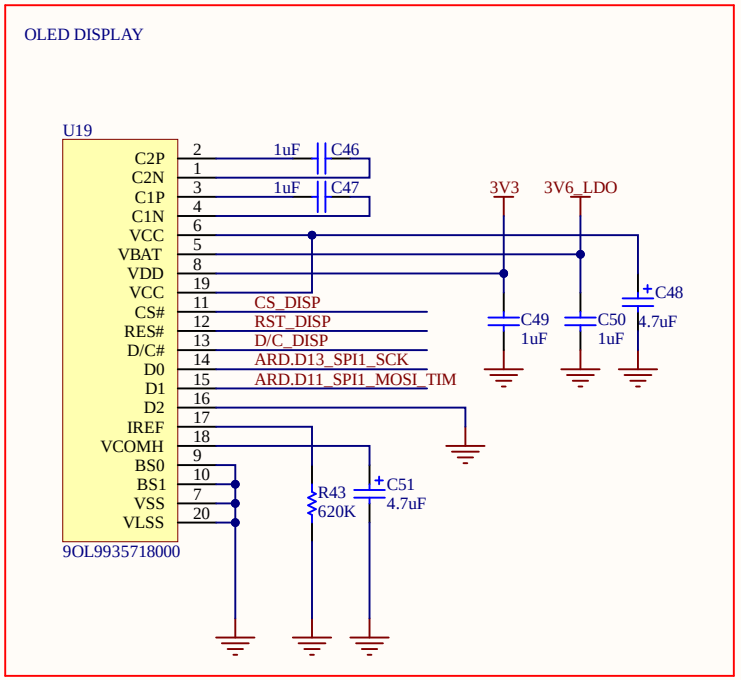

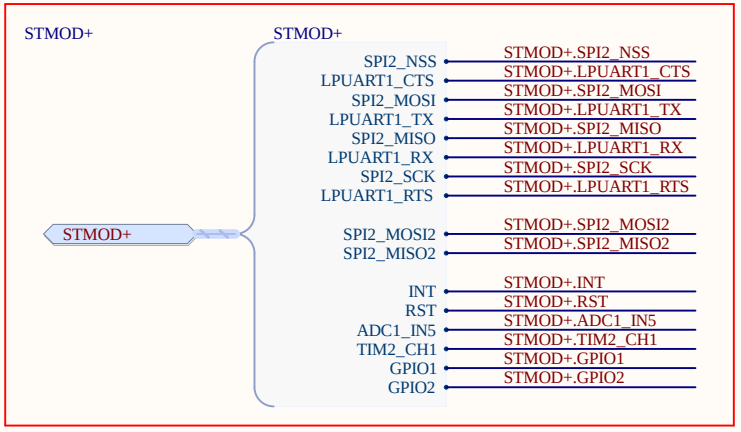

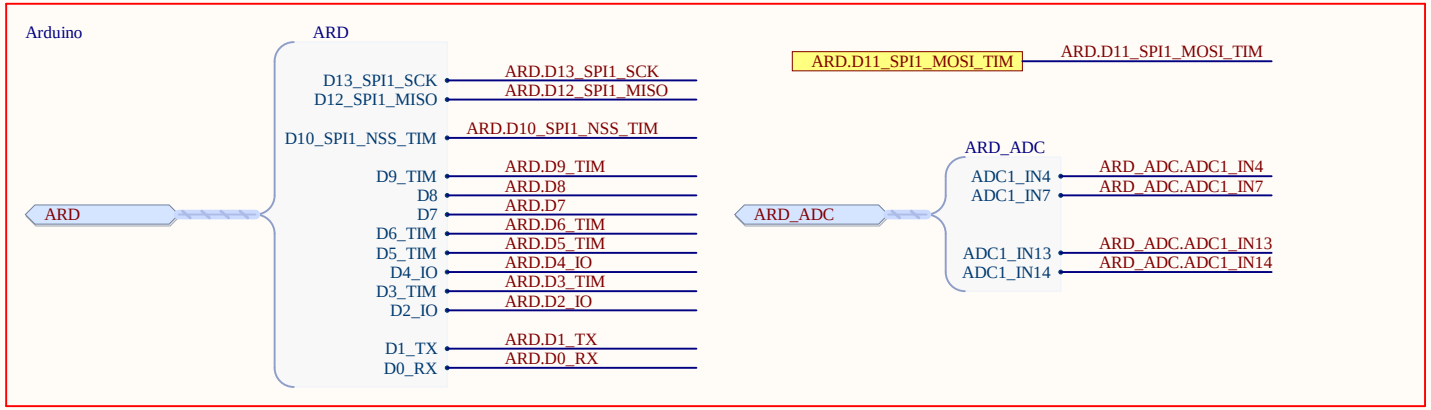

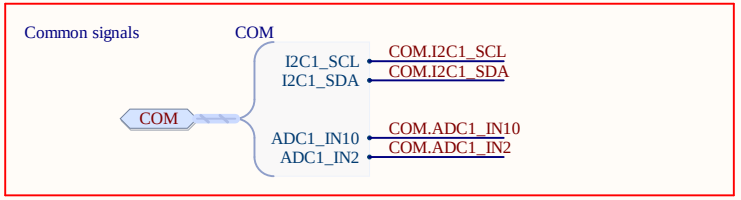

Title: **Microcontroller and OLED display**		
Project: **STM32WB5MM Discovery Kit**		
Variant: WB5MM		
Revision: B-01		Reference: MB1292
Size: A4	Date: 27-Nov-20	Sheet: 3 of 8

Temperature sensor

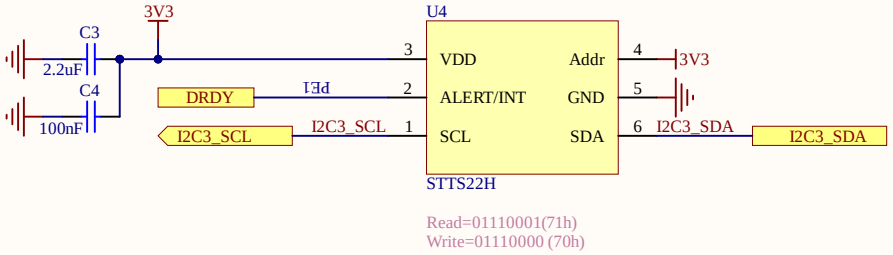

3D accelerometer and 3D gyroscope

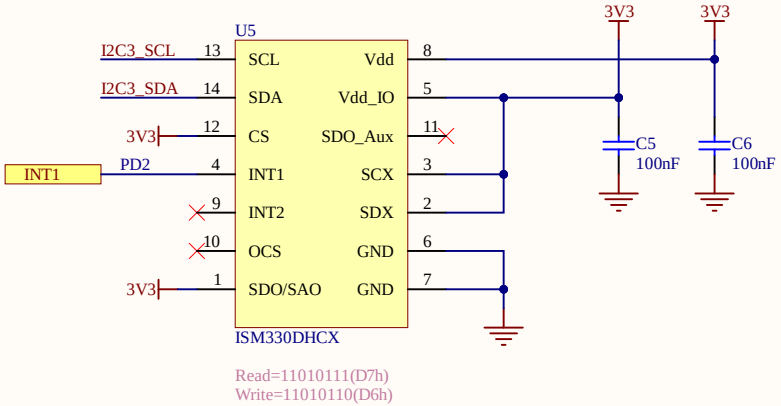

Time-of-Flight ranging and gesture detection sensor

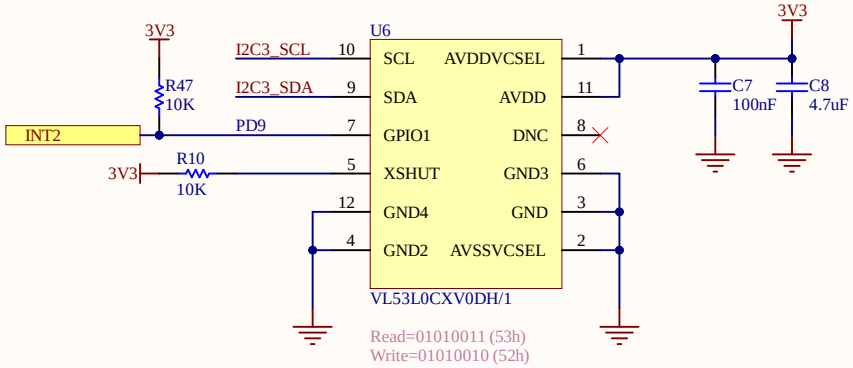

I2C3 Pull-up

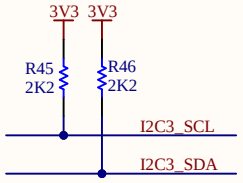

MEMS micro

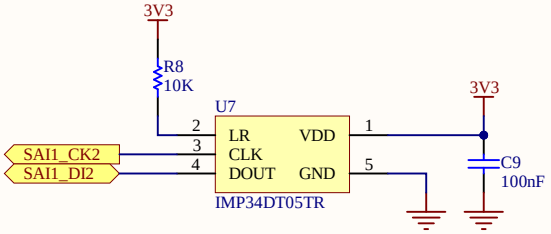

Quad-SPI

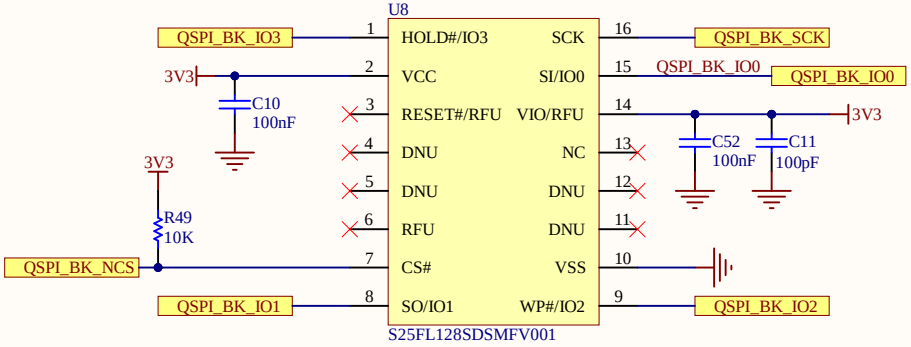

Title: **MEMS sensors and Quad-SPI**		
Project: **STM32WB5MM Discovery Kit**		
Variant: WB5MM		
Revision: B-01		Reference: MB1292
Size: A4	Date: 27-Nov-20	Sheet: 4 of 8

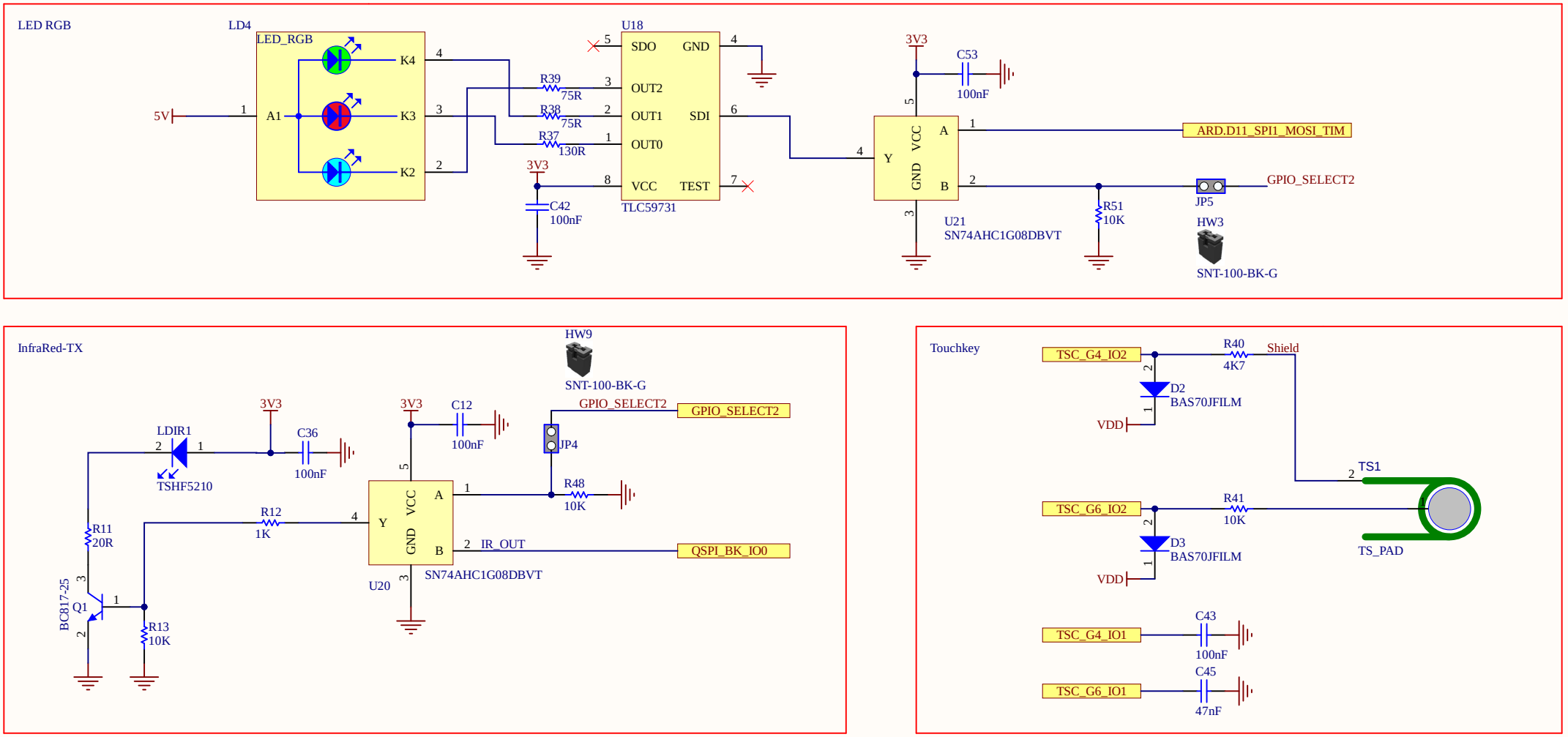

Title: **LEDs, touchkey and push-buttons**		
Project: **STM32WB5MM Discovery Kit**		
Variant: WB5MM		
Revision: B-01		Reference: MB1292
Size: A4	Date: 27-Nov-20	Sheet: 5 of 8

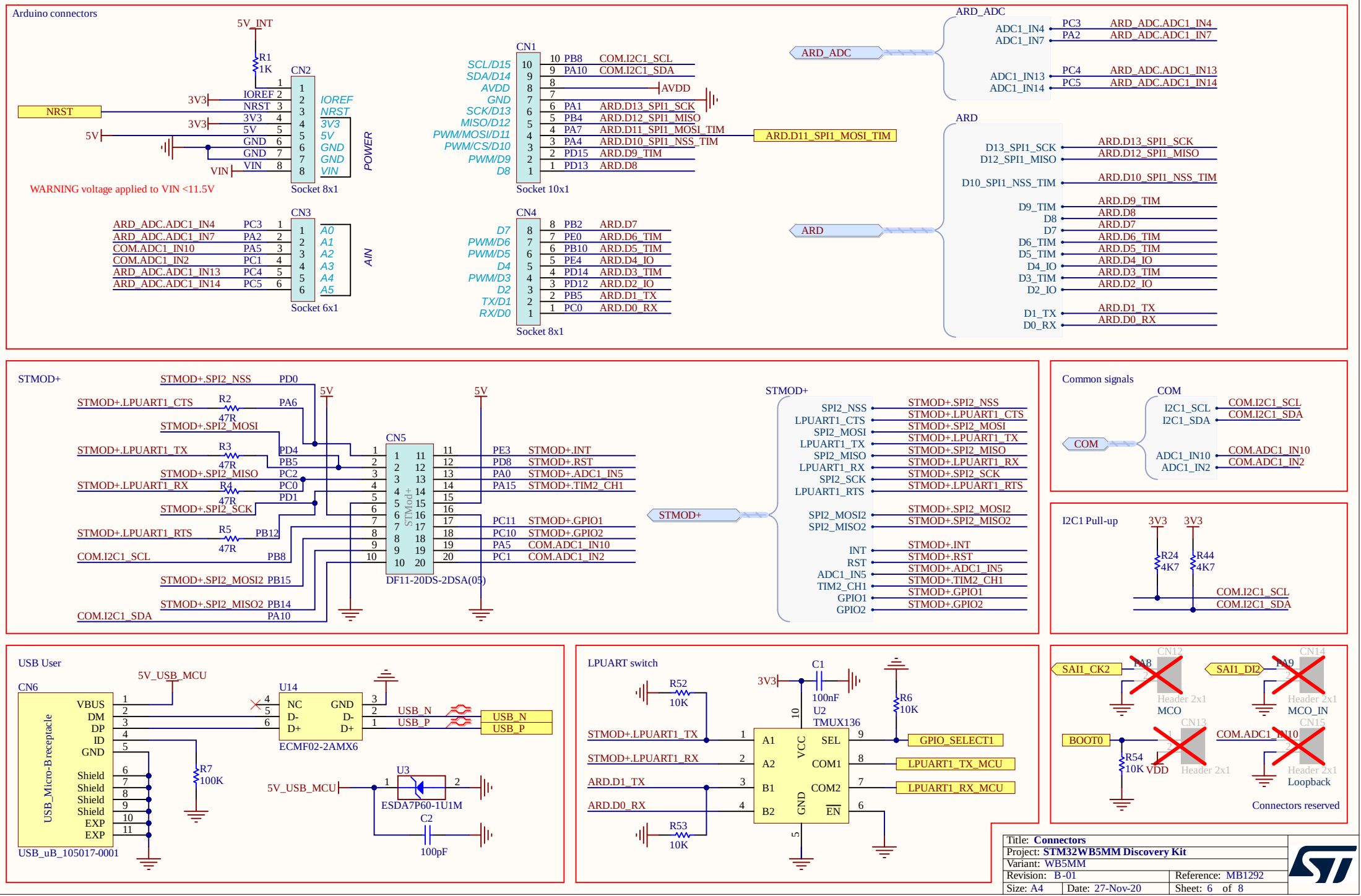
Arduino connectors
5V_INT
R1
1K
CN2
NRST
3V3
IOREF
NRST
3V3
5V
GND
GND
VIN
POWER
WARNING voltage applied to VIN <11.5V
Socket 8x1
CN1
SCL/D15
SDA/D14
AVDD
GND
SCK/D13
MISO/D12
PWM/MOSI/D11
PWM/CS/D10
PWM/D9
D8
10 PB8 COM.I2C1_SCL
9 PA10 COM.I2C1_SDA
8 AVDD
7
6 PA1 ARD.D13_SPI1_SCK
5 PB4 ARD.D12_SPI1_MISO
4 PA7 ARD.D11_SPI1_MOSI_TIM
3 PA4 ARD.D10_SPI1_NSS_TIM
2 PD15 ARD.D9_TIM
1 PD13 ARD.D8
Socket 10x1
ARD_ADC
ADC1_IN4 PC3 ARD_ADC.ADC1_IN4
ADC1_IN7 PA2 ARD_ADC.ADC1_IN7
ADC1_IN13 PC4 ARD_ADC.ADC1_IN13
ADC1_IN14 PC5 ARD_ADC.ADC1_IN14
ARD
D13_SPI1_SCK ARD.D13_SPI1_SCK
D12_SPI1_MISO ARD.D12_SPI1_MISO
D10_SPI1_NSS_TIM ARD.D10_SPI1_NSS_TIM
D9_TIM ARD.D9_TIM
D8 ARD.D8
D7 ARD.D7
D6_TIM ARD.D6_TIM
D5_TIM ARD.D5_TIM
D4_IO ARD.D4_IO
D3_TIM ARD.D3_TIM
D2_IO ARD.D2_IO
D1_TX ARD.D1_TX
D0_RX ARD.D0_RX
ARD_ADC.ADC1_IN4 PC3
ARD_ADC.ADC1_IN7 PA2
COM.ADC1_IN10 PA5
COM.ADC1_IN2 PC1
ARD_ADC.ADC1_IN13 PC4
ARD_ADC.ADC1_IN14 PC5
CN3
A0
A1
A2
A3
A4
A5
AIN
Socket 6x1
CN4
D7
PWM/D6
PWM/D5
D4
PWM/D3
D2
TX/D1
RX/D0
8 PB2 ARD.D7
7 PE0 ARD.D6_TIM
6 PB10 ARD.D5_TIM
5 PE4 ARD.D4_IO
4 PD14 ARD.D3_TIM
3 PD12 ARD.D2_IO
2 PB5 ARD.D1_TX
1 PC0 ARD.D0_RX
Socket 8x1
STMOD+
STMOD+.SPI2_NSS PD0
STMOD+.LPUART1_CTS R2 47R PA6
STMOD+.SPI2_MOSI PD4
STMOD+.LPUART1_TX R3 47R PB5
STMOD+.SPI2_MISO PC2
STMOD+.LPUART1_RX R4 47R PC0
STMOD+.SPI2_SCK PD1
STMOD+.LPUART1_RTS R5 47R PB12
COM.I2C1_SCL PB8
STMOD+.SPI2_MOSI2 PB15
STMOD+.SPI2_MISO2 PB14
COM.I2C1_SDA PA10
5V
CN5
STMOd+
DF11-20DS-2DSA(05)
PE3 STMOD+.INT
PD8 STMOD+.RST
PA0 STMOD+.ADC1_IN5
PA15 STMOD+.TIM2_CH1
PC11 STMOD+.GPIO1
PC10 STMOD+.GPIO2
PA5 COM.ADC1_IN10
PC1 COM.ADC1_IN2
SPI2_NSS STMOD+.SPI2_NSS
LPUART1_CTS STMOD+.LPUART1_CTS
SPI2_MOSI STMOD+.SPI2_MOSI
LPUART1_TX STMOD+.LPUART1_TX
SPI2_MISO STMOD+.SPI2_MISO
LPUART1_RX STMOD+.LPUART1_RX
SPI2_SCK STMOD+.SPI2_SCK
LPUART1_RTS STMOD+.LPUART1_RTS
SPI2_MOSI2 STMOD+.SPI2_MOSI2
SPI2_MISO2 STMOD+.SPI2_MISO2
INT STMOD+.INT
RST STMOD+.RST
ADC1_IN5 STMOD+.ADC1_IN5
TIM2_CH1 STMOD+.TIM2_CH1
GPIO1 STMOD+.GPIO1
GPIO2 STMOD+.GPIO2
Common signals
COM
I2C1_SCL COM.I2C1_SCL
I2C1_SDA COM.I2C1_SDA
ADC1_IN10 COM.ADC1_IN10
ADC1_IN2 COM.ADC1_IN2
I2C1 Pull-up
3V3
R24 4K7
R44 4K7
USB User
CN6
USB_Micro-Breceptacle
VBUS
DM
DP
ID
GND
Shield
EXP
USB_uB_105017-0001
5V_USB_MCU
R7 100K
U14
NC
D-
D+
GND
ECMF02-2AMX6
USB_N
USB_P
U3
ESDA7P60-1U1M
C2
100pF
LPUART switch
R52 10K
R53 10K
3V3
C1 100nF
U2 TMUX136
R6 10K
A1
A2
B1
B2
VCC
GND
SEL
COM1
COM2
EN
GPIO_SELECT1
LPUART1_TX_MCU
LPUART1_RX_MCU
STMOD+.LPUART1_TX
STMOD+.LPUART1_RX
ARD.D1_TX
ARD.D0_RX
SAI1_CK2
PA8
CN12
Header 2x1
MCO
SAI1_DI2
PA9
CN14
MCO_IN
BOOT0
R54 10K
VDD
CN13
CN15
COM.ADC1_IN10
Loopback
Connectors reserved
Title: Connectors
Project: STM32WB5MM Discovery Kit
Variant: WB5MM
Revision: B-01
Reference: MB1292
Size: A4
Date: 27-Nov-20
Sheet: 6 of 8

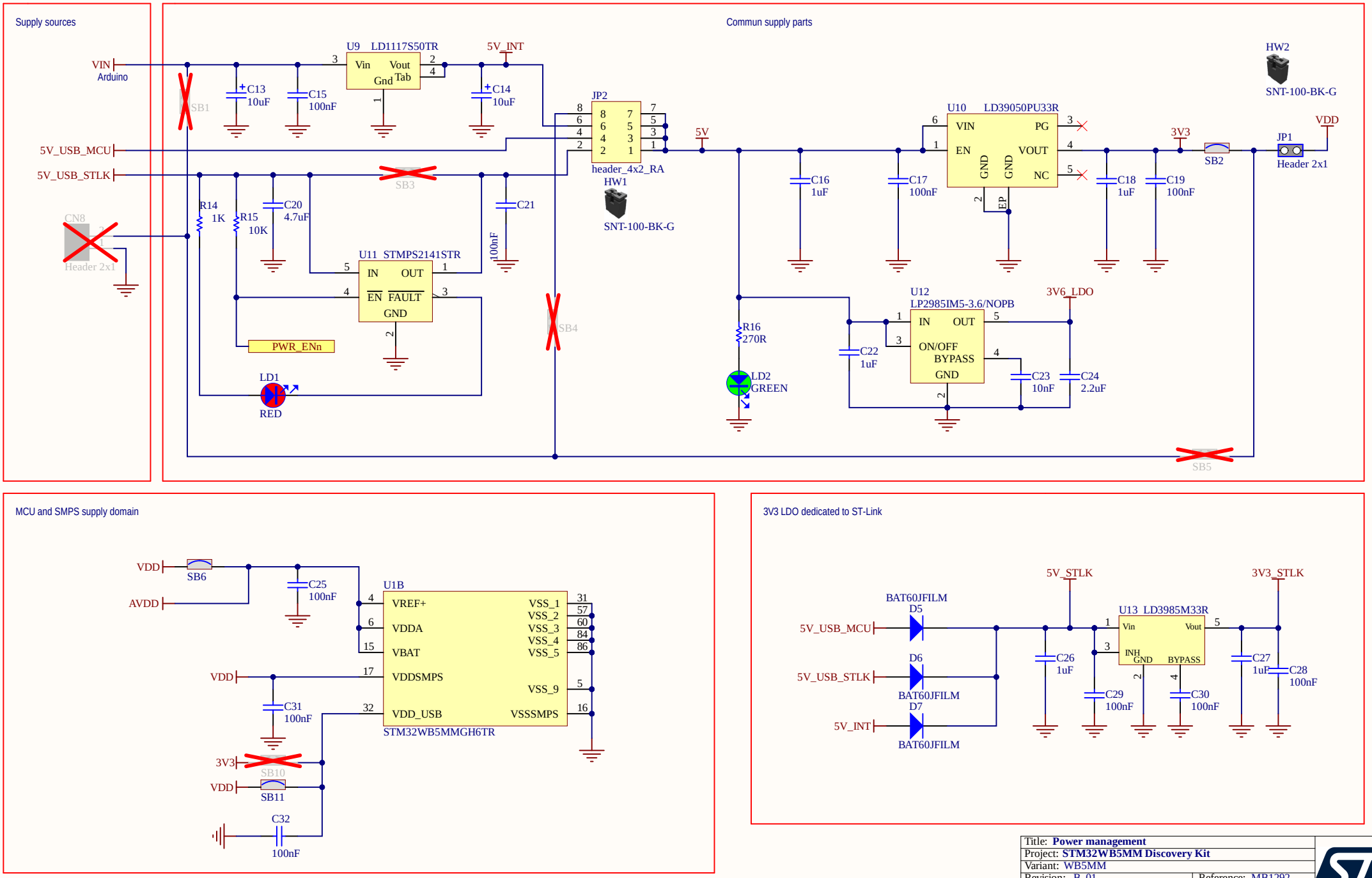

Title: **Power management**		
Project: **STM32WB5MM Discovery Kit**		
Variant: WB5MM		
Revision: B-01		Reference: MB1292
Size: A4	Date: 27-Nov-20	Sheet: 7 of 8

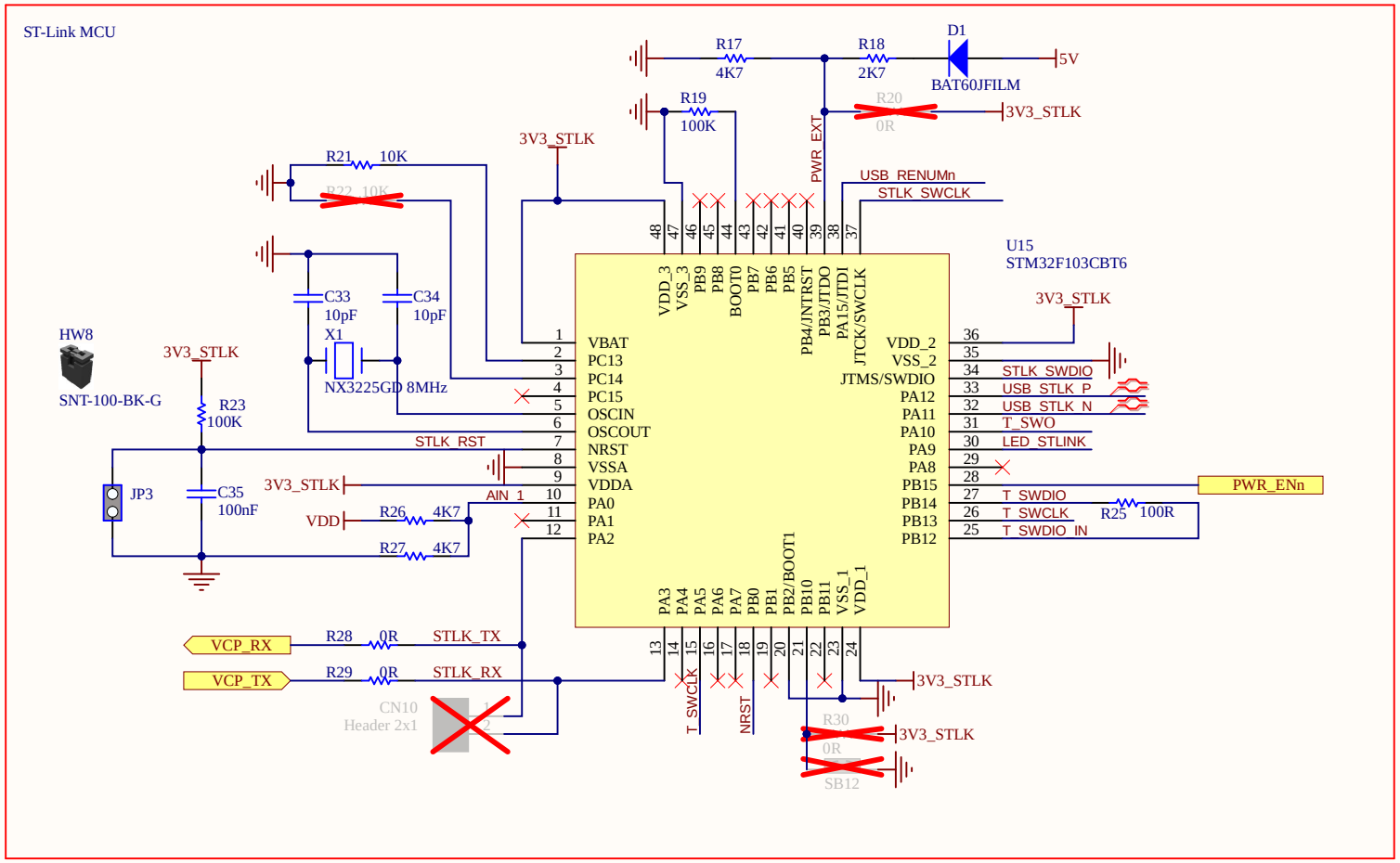

Title: **ST-LINK V2-1**		
Project: **STM32WB5MM Discovery Kit**		
Variant: WB5MM		
Revision: B-01		Reference: MB1292
Size: A4	Date: 27-Nov-20	Sheet: 8 of 8

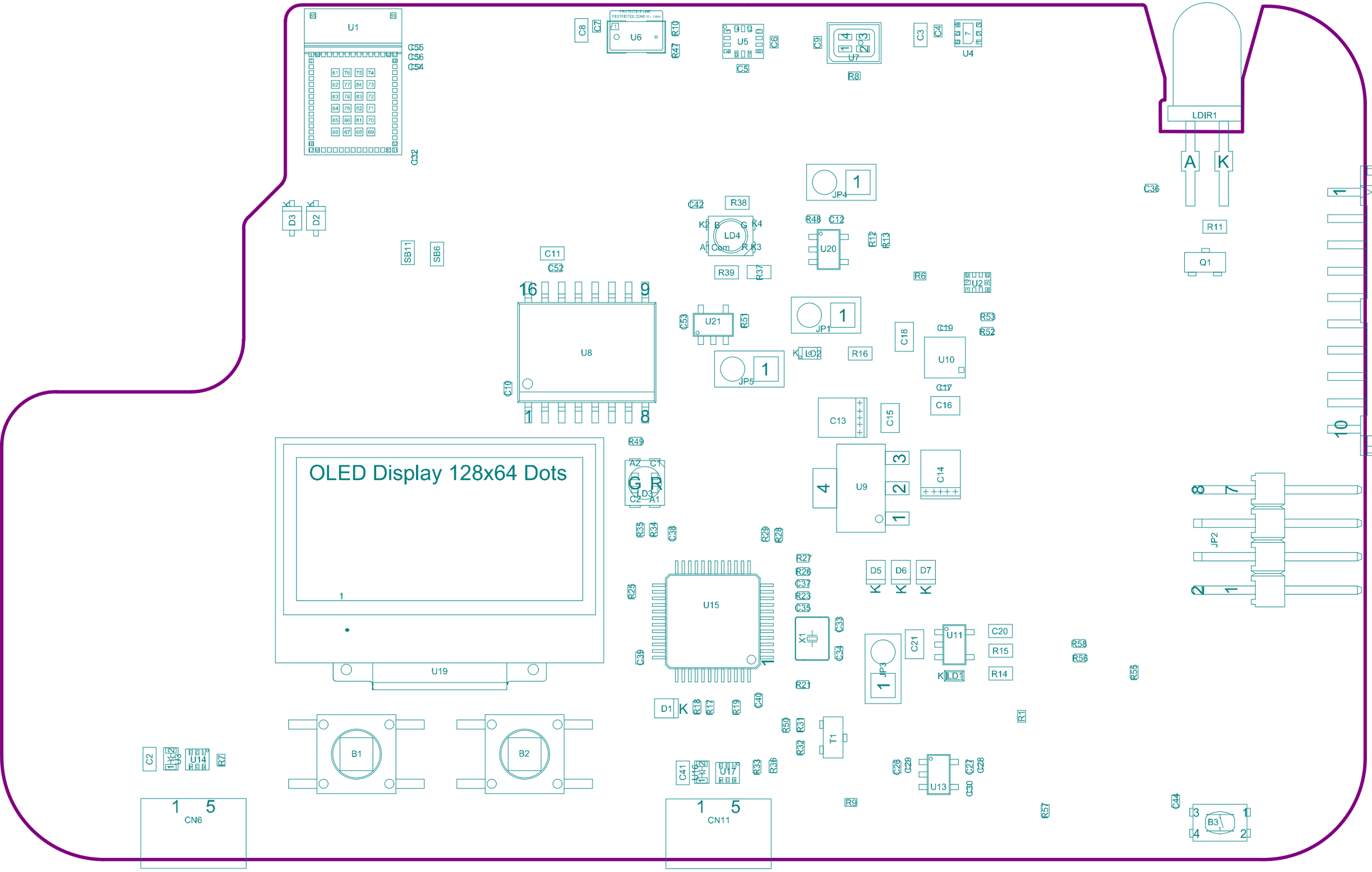

Project: STM32WB5MM Discovery Kit	
Layer: M14-Top Assembly	Gerber: .GM14
Variant: WB5MM	Ref: MB1292
Date: 27-Nov-20	Rev: B

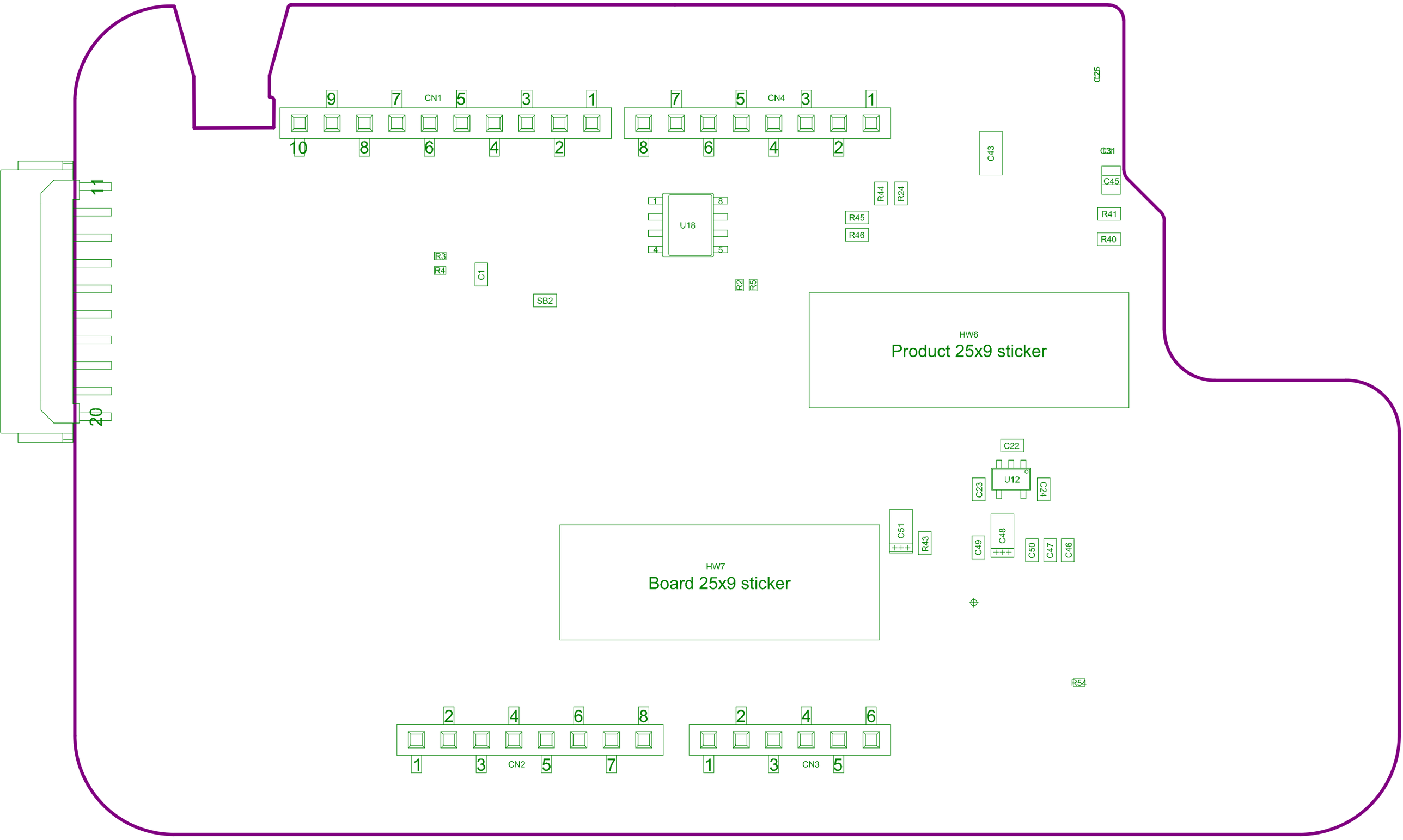

Project: STM32WB5MM Discovery Kit	
Layer: M15-Bottom Assembly	Gerber:.GM15
Variant: WB5MM	Ref: MB1292
Date: 27-Nov-20	Rev: B

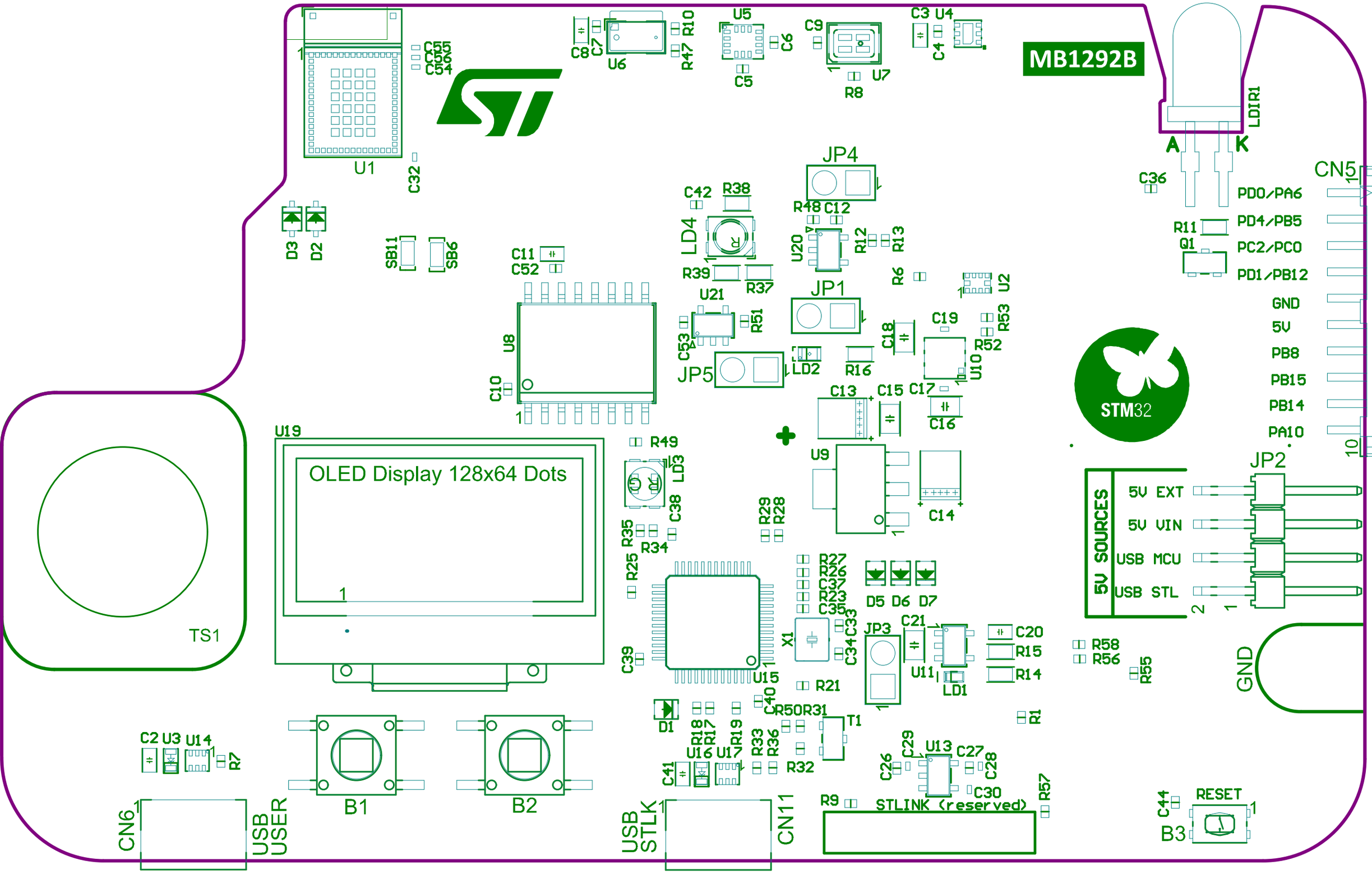

Top Overlay .GTO

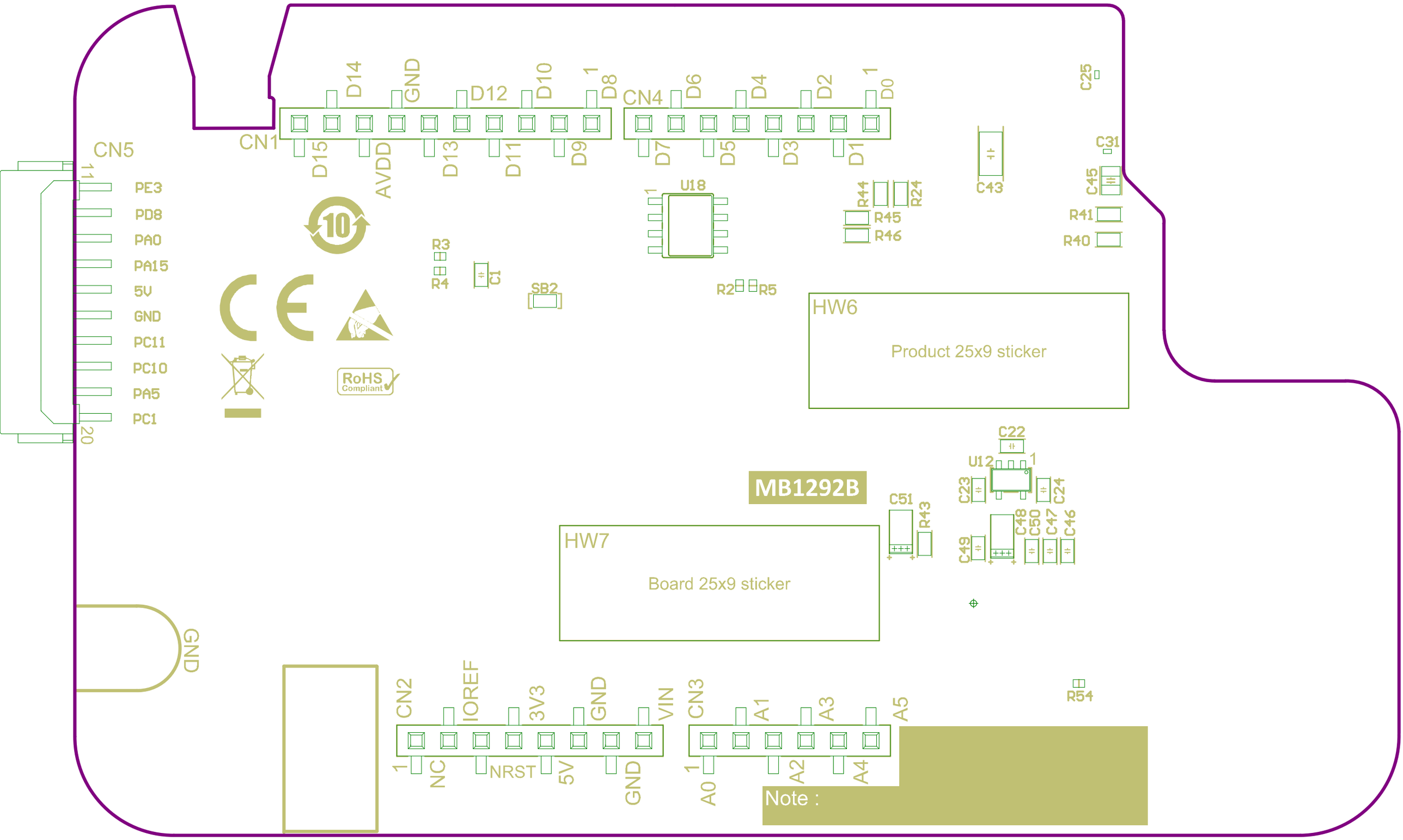

Bottom Overlay .GBO