STM32H5F5J Discovery Kit

MB2114 H5F5LJ

Table of contents

Sheet 1: Project overview (this page)

Sheet 2: MB2114 TOP

Sheet 3: MCU System

Sheet 4: MCU Power

Sheet 5: MCU Interfaces

Sheet 6: Board Power

Sheet 7: Display

Sheet 8: Camera

Sheet 9: Sensor

Sheet 10: User Interface

Sheet 11: Octo SPI Flash

Sheet 12: Octo SPI RAM Memory

Sheet 13: Micro SD Card

Sheet 14: Ethernet

Sheet 15: USB Type C

Sheet 16: Arduino UNO Rev3 Connectors

Sheet 17: M2 Level Shifters

Sheet 18: M2 Connectivity

Sheet 19: STLINK V3EC

Sheet 20: External Debug Connectors

MB2114 TOP

Top.SchDoc

HW2

STICKER BOARD

N/A

HW14

PCB

MB2114

Legend

General comment such as function title, configuration, ...

Text to be added to silkscreen.

Warning text.

Notes to generate the board layout.

Open Platform License Agreement

The Open Platform License Agreement (“Agreement”) is a binding legal contract between you ("You") and STMicroelectronics International N.V. (“ST”), a company incorporated under the laws of the Netherlands acting for the purpose of this Agreement through its Swiss branch 39, Chemin du Champ des Filles, 1228 Plan-les-Ouates, Geneva, Switzerland.

By using the enclosed reference designs, schematics, PC board layouts, and documentation, in hardcopy or CAD tool file format (collectively, the “Reference Material”), You are agreeing to be bound by the terms and conditions of this Agreement. Do not use the Reference Material until You have read and agreed to this Agreement terms and conditions. The use of the Reference Material automatically implies the acceptance of the Agreement terms and conditions.

The complete Open Platform License Agreement can be found on www.st.com/opla.

Title: **Project overview**			
Project: **STM32H5F5J Discovery Kit**			
Variant: H5F5LJ			
Revision: C-01		Reference: MB2114	
Size: A4	Date: 09 July 2025	Sheet: 1 of 20	

STM32H5F5J Discovery Kit

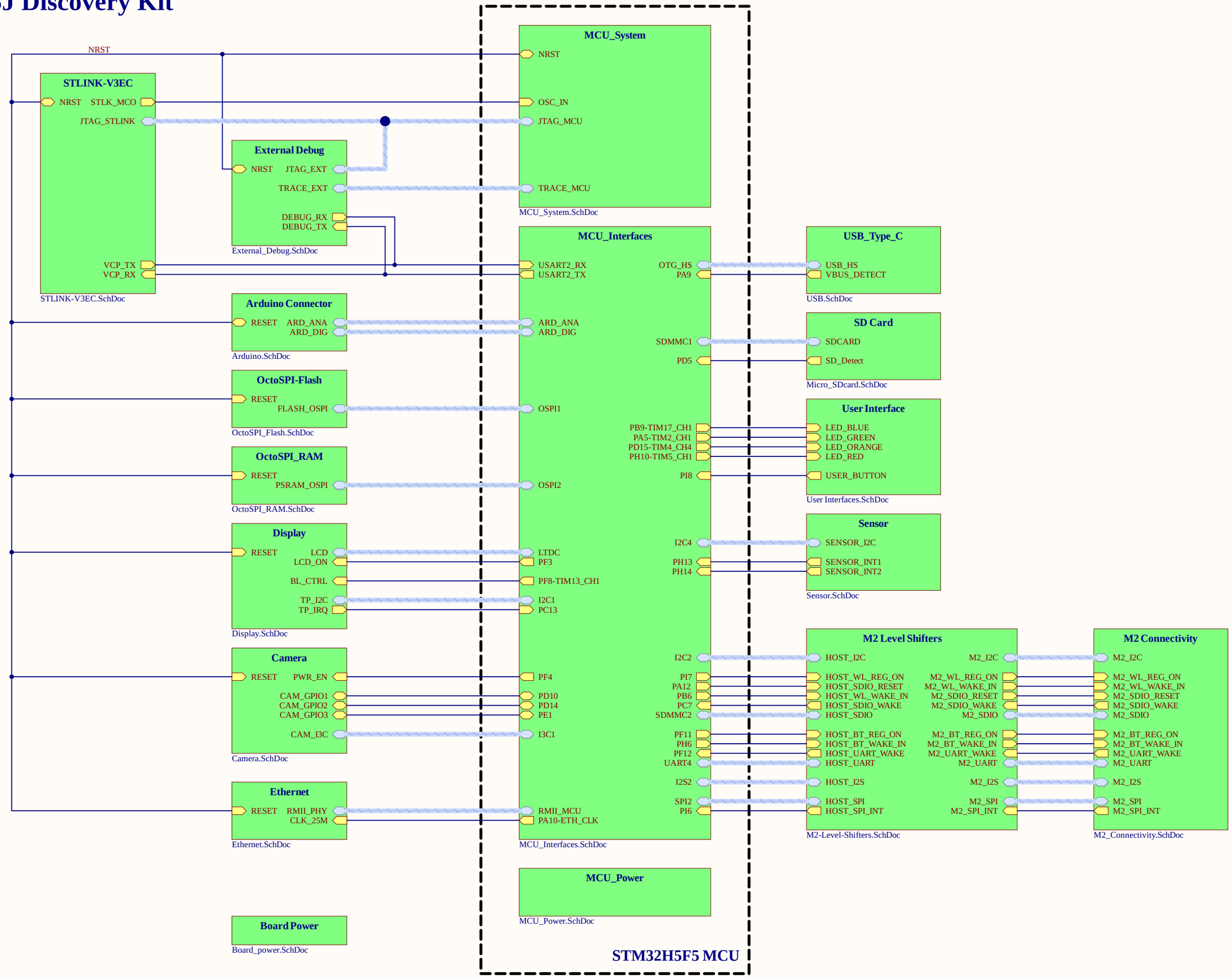

Title: **TOP**		
Project: **STM32H5F5J Discovery Kit**		
Variant: H5F5LJ		
Revision: C-01		Reference: MB2114
Size: A3	Date: 09 July 2025	Sheet: 2 of 20

MCU System

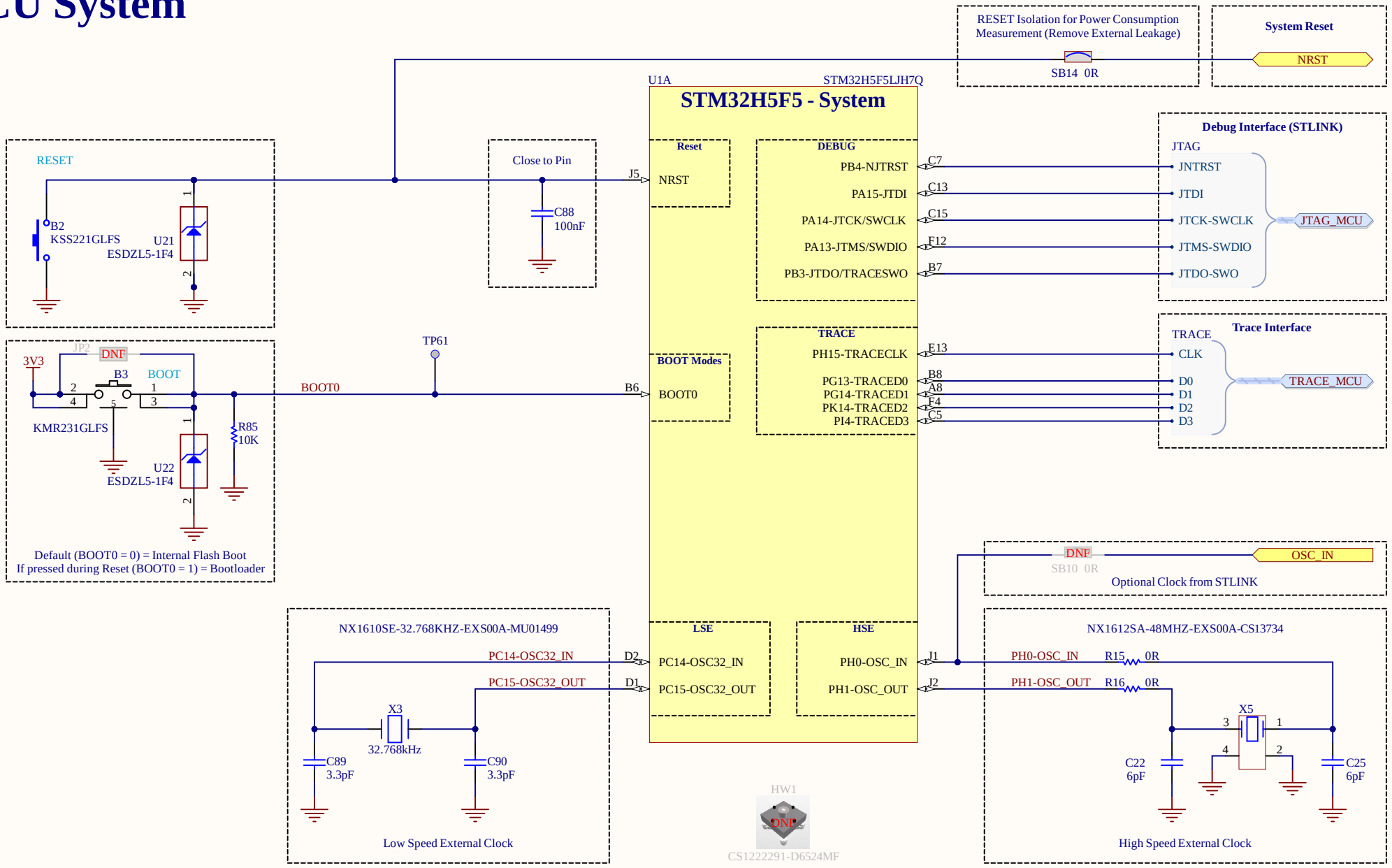

Title: **MCU System**		
Project: **STM32H5F5J Discovery Kit**		
Variant: H5F5LJ		
Revision: C-01		Reference: MB2114
Size: A4	Date: 09 July 2025	Sheet: 3 of 20

STM32 microcontroller power

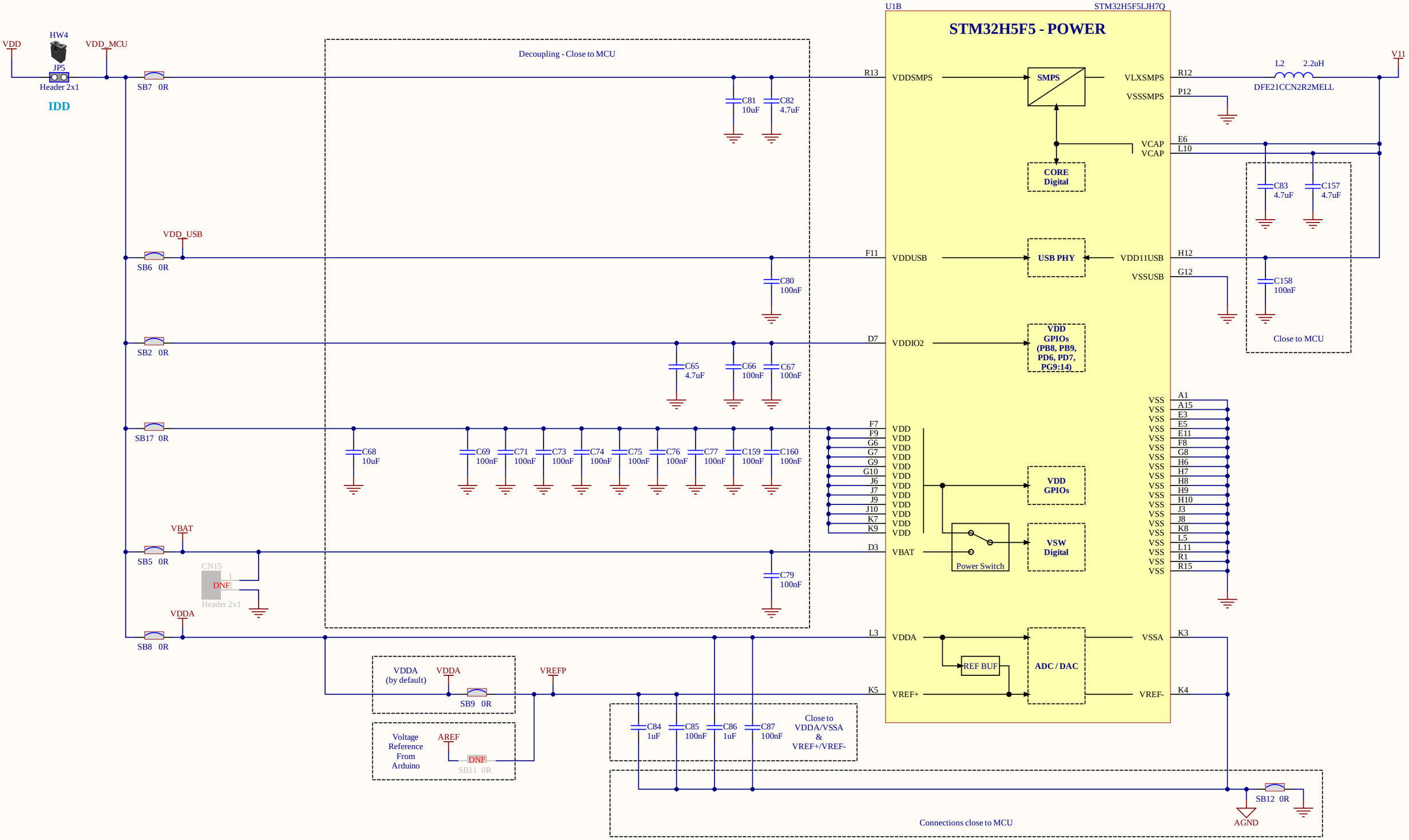

Title: **STM32 microcontroller power**		
Project: **STM32H5F5J Discovery Kit**		
Variant: H5F5LJ		
Revision: C-01		Reference: MB2114
Size: A3	Date: 09 July 2025	Sheet: 4 of 20

MCU Interfaces

U1C STM32H5F5LJH7Q

STM32H5F5 GPIOs

PA	PA0	L2	PA0-ADC12_INP0
	PA1	L4	PA1-ETH_RMII_REF_CLK
	PA2	M3	PA2-USART2_TX
	PA3	M4	PA3-USART2_RX
	PA4	N3	PA4-SPI1_NSS-LPTIM2_CH1
	PA5	P2	PA5-TIM2_CH1
	PA6	R2	PA6-OSPI1_IO3
	PA7	P3	PA7-TIM14_CH1
	PA8	G11	PA8
	PA9	G13	PA9
	PA10	F13	PA10-ETH_CLK
	PA11	F15	PA11-SPI2_NSS
	PA12	F14	PA12
PB	PB0	R3	PB0-UART4_CTS
	PB1	L6	PB1-OSPI1_NCLK
	PB2	P4	PB2-LCD_R3
	PB5	E7	PB5-SPI1_MOSI-TIM3_CH2
	PB6	E8	PB6
	PB7	A6	PB7-LCD_G7
	# PB8	C6	PB8-TIM16_CH1
	# PB9	A5	PB9-TIM17_CH1
	PB10	M10	PB10-LCD_G4
	PB11	P11	PB11-ETH_RMII_TX_EN
	PB12	P14	PB12-ETH_RMII_TXD0
	PB13	N13	PB13-SPI2_SCK
	PB14	K11	PB14-UART4_RTS
	PB15	M13	PB15-SDMMC2_D1
PC	PC0	L1	PC0-ADC12_INP10
	PC1	K2	PC1-ADC12_INP11
	PC2	M1	PC2-I2S2_SDI
	PC3	M2	PC3-ADC12_INP13
	PC4	N4	PC4-ETH_RMII_RXD0
	PC5	M5	PC5-OSPI1_DQS
	PC6	J15	PC6-I2S2_MCK
	PC7	H14	PC7
	PC8	H13	PC8-SDMMC1_D0
	PC9	G14	PC9-OSPI1_IO0
	PC10	D12	PC10-SDMMC1_D2
	PC11	B14	PC11-SDMMC1_D3
	PC12	B15	PC12-TIM15_CH1
	PC13	C3	PC13
PD	PD0	E10	PD0-LCD_R2
	PD1	C12	PD1-ETH_RMII_CRS_DV
	PD2	D11	PD2-OSPI2_IO1
	PD3	A14	PD3-LCD_B4
	PD4	B13	PD4-LCD_B7
	PD5	B12	PD5
	# PD6	A10	PD6-SDMMC2_CK
	# PD7	C9	PD7-SDMMC2_CMD
	PD8	L12	PD8-LCD_R5
	PD9	P15	PD9-LCD_R4
	PD10	N14	PD10
	PD11	N15	PD11-LCD_R6
	PD12	M14	PD12-UART4_TX
	PD13	L13	PD13-I3C1_SDA
	PD14	J11	PD14
	PD15	K12	PD15-TIM4_CH4
PE	PE0	D6	PE0-OSPI1_NCS2
	PE1	B5	PE1
	PE2	B3	PE2-OSPI1_IO2
	PE3	D5	PE3-LCD_G1
	PE4	C4	PE4-LCD_G3
	PE5	D4	PE5-ETH_RMII_RXD1
	PE6	F6	PE6-TIM15_CH2
	PE7	L8	PE7-UART7_RX
	PE8	M8	PE8-UART7_TX
	PE9	N8	PE9-OSPI1_IO6
	PE10	M9	PE10-OSPI1_IO7
	PE11	R10	PE11-LCD_B5
	PE12	L9	PE12-ADC3_INP6
	PE13	P10	PE13-ADC3_INP7
	PE14	N10	PE14-OSPI2_CLK
	PE15	R11	PE15-OSPI2_NCS1
PF	PF0	E1	PF0-SDMMC2_D2
	PF1	G4	PF1-SDMMC2_D3
	PF2	F2	PF2
	PF3	H5	PF3
	PF4	G1	PF4
	PF5	H4	PF5-OSPI2_DQS
	PF6	H3	PF6-LCD_DE
	PF7	H2	PF7-SDMMC1_D1
	PF8	H1	PF8-TIM13_CH1
	PF9	J4	PF9-OSPI1_IO1
	PF10	K1	PF10-OSPI1_CLK
	PF11	L7	PF11
	PF12	P6	PF12
	PF13	R6	PF13-LCD_B6
	PF14	M7	PF14-LCD_G5
	PF15	N7	PF15-OSPI2_NCS2

VDDIO2

U1D STM32H5F5LJH7Q

STM32H5F5 GPIOs

PG	PG0	P7	PG0-OSPI2_IO0
	PG1	R7	PG1-SPI2_MOSI
	PG2	L15	PG2-OSPI2_IO2
	PG3	J12	PG3-OSPI2_IO3
	PG4	K14	PG4-OSPI2_IO4
	PG5	K15	PG5-OSPI2_IO5
	PG6	J13	PG6-OSPI1_NCS1
	PG7	H11	PG7-I3C1_SCL
	PG8	J14	PG8-OSPI2_NCLK
	# PG9	B9	PG9-SPI1_MISO
	#PG10	A9	PG10-OSPI2_IO6
	#PG11	D8	PG11-SPI1_SCK
	#PG12	C8	PG12-ETH_RMII_TXD1
	#PG15	A7	PG15-OSPI2_IO7
PH	PH2	N1	PH2-OSPI1_IO4
	PH3	N2	PH3-OSPI1_IO5
	PH4	P1	PH4-I2C2_SCL
	PH5	K6	PH5-I2C2_SDA
	PH6	N11	PH6
	PH7	M11	PH7-I2C3_SCL
	PH8	N12	PH8-I2C3_SDA
	PH9	P13	PH9-LCD_R7
	PH10	K10	PH10-TIM5_CH1
	PH11	M12	PH11-I2C4_SCL
	PH12	R14	PH12-I2C4_SDA
	PH13	E15	PH13
	PH14	E14	PH14
PI	PI0	E12	PI0-I2S2_WS
	PI1	D15	PI1-SDMMC2_D0
	PI2	F10	PI2-SPI2_MISO
	PI3	D14	PI3-I2S2_SDO
	PI5	A4	PI5-LCD_R0
	PI6	A3	PI6
	PI7	B4	PI7
	PI8	E4	PI8
	PI9	E2	PI9-UART4_RX
	PI10	C1	PI10
	PI11	F3	PI11-LCD_B1
	PI12	F1	PI12
	PI13	G3	PI13
	PI14	G2	PI14
	PI15	N5	PI15
PJ	PJ0	R4	PJ0
	PJ1	M6	PJ1
	PJ2	P5	PJ2
	PJ3	R5	PJ3
	PJ4	N6	PJ4-LCD_G2
	PJ5	P8	PJ5
	PJ6	R8	PJ6-ETH_MDIO
	PJ7	R9	PJ7-ETH_MDC
	PJ8	P9	PJ8-LCD_R1
	PJ9	N9	PJ9-LCD_CLK
	PJ10	D13	PJ10-LCD_HSYNC
	PJ11	C14	PJ11-LCD_VSYNC
	PJ12	A13	PJ12
	PJ13	C11	PJ13
	PJ14	D10	PJ14
	PJ15	E9	PJ15-LCD_G6
PK	PK0	M15	PK0
	PK1	L14	PK1
	PK2	K13	PK2
	PK3	A12	PK3
	PK4	B11	PK4
	PK5	C10	PK5
	PK6	A11	PK6
	PK7	B10	PK7-SDMMC1_CMD
	PK8	D9	PK8-SDMMC1_CK
	PK9	A2	PK9-I2C1_SCL
	PK10	B2	PK10-I2C1_SDA
	PK11	C2	PK11-LCD_B0
	PK12	F5	PK12-LCD_B3
	PK13	B1	PK13-LCD_B2
	PK15	G5	PK15-LCD_G0
	OTG_HSDP	G15	HSDP
	OTG_HSDM	H15	HSDN

VDDIO2

M2 Connectivity

VDD VDD
R90 1K5
R111 1K5
I2C
PH5-I2C2_SDA → SDA
PH4-I2C2_SCL → SCL
→ I2C2

PI7 → PI7
PA12 → PA12
PB6 → PB6
PC7 → PC7

SDMMC
PI1-SDMMC2_D0 → D0
PB15-SDMMC2_D1 → D1
PF0-SDMMC2_D2 → D2
PF1-SDMMC2_D3 → D3
PD6-SDMMC2_CK → CK
PD7-SDMMC2_CMD → CMD
→ SDMMC2

PF11 → PF11
PF12 → PF12
PH6 → PH6

UART
PI9-UART4_RX → RX
PD12-UART4_TX → TX
PB0-UART4_CTS → CTS
PB14-UART4_RTS → RTS
→ UART4

I2S
PC6-I2S2_MCK → MCK
PI0-I2S2_WS → WS
PC2-I2S2_SDI → SDI
PI3-I2S2_SDO → SDO
→ I2S2

PI6 → PI6

SPI
PA11-SPI2_NSS → CS
PG1-SPI2_MOSI → MOSI
PI2-SPI2_MISO → MISO
PB13-SPI2_SCK → SCK
→ SPI2

Ethernet

RMII
PJ7-ETH_MDC → MDC
PJ6-ETH_MDIO → MDIO
PA1-ETH_RMII_REF_CLK → REF_CLK
PD1-ETH_RMII_CRS_DV → CRS_DV
PC4-ETH_RMII_RXD0 → RXD0
PE5-ETH_RMII_RXD1 → RXD1
PB11-ETH_RMII_TX_EN → TX_EN
PB12-ETH_RMII_TXD0 → TXD0
PG12-ETH_RMII_TXD1 → TXD1
→ RMII_MCU

PA10-ETH_CLK → PA10-ETH_CLK

Sensor

VDD VDD
R130 10K
R131 10K
I2C
PH12-I2C4_SDA → SDA
PH11-I2C4_SCL → SCL
→ I2C4

PH13 → PH13
PH14 → PH14

USB

PA9 → PA9
HSDP → D+
HSDN → D-
USB → OTG_HS

NOR FLash

OSPI
PG6-OSPI1_NCS1 → NCS1
PE0-OSPI1_NCS2 → NCS2
PF10-OSPI1_CLK → CLK
PB1-OSPI1_NCLK → NCLK
PC9-OSPI1_IO0 → IO0
PF9-OSPI1_IO1 → IO1
PE2-OSPI1_IO2 → IO2
PA6-OSPI1_IO3 → IO3
PH2-OSPI1_IO4 → IO4
PH3-OSPI1_IO5 → IO5
PE9-OSPI1_IO6 → IO6
PE10-OSPI1_IO7 → IO7
PC5-OSPI1_DQS → DQS
→ OSPI1

PSRAM

OSPI
PE15-OSPI2_NCS1 → NCS1
PF15-OSPI2_NCS2 → NCS2
PE14-OSPI2_CLK → CLK
PG8-OSPI2_NCLK → NCLK
PG0-OSPI2_IO0 → IO0
PD2-OSPI2_IO1 → IO1
PG2-OSPI2_IO2 → IO2
PG3-OSPI2_IO3 → IO3
PG4-OSPI2_IO4 → IO4
PG5-OSPI2_IO5 → IO5
PG10-OSPI2_IO6 → IO6
PG15-OSPI2_IO7 → IO7
PF5-OSPI2_DQS → DQS
→ OSPI2

SD Card

SDMMC
PC8-SDMMC1_D0 → D0
PF7-SDMMC1_D1 → D1
PC10-SDMMC1_D2 → D2
PC11-SDMMC1_D3 → D3
PK7-SDMMC1_CMD → CMD
PK8-SDMMC1_CK → CK
→ SDMMC1

PD5 → PD5

User Interface

PB9-TIM17_CH1 → PB9-TIM17_CH1
PA5-TIM2_CH1 → PA5-TIM2_CH1
PD15-TIM4_CH4 → PD15-TIM4_CH4
PH10-TIM5_CH1 → PH10-TIM5_CH1
PI8 → PI8

VCP

PA2-USART2_TX → USART2_TX
PA3-USART2_RX → USART2_RX

Free GPIOs

PI10 TP106
PI13 TP107
PI14 TP108
PI15 TP109
PJ0 TP110
PJ1 TP111
PJ2 TP112
PJ3 TP113
PJ5 TP114
PJ12 TP115
PJ13 TP116
PJ14 TP117
PK0 TP118
PK1 TP119
PK2 TP120
PK3 TP121
PK4 TP122
PK5 TP123
PK6 TP124

Display

VDD VDD
R116 1K5
R127 1K5
I2C
PK10-I2C1_SDA → SDA
PK9-I2C1_SCL → SCL
→ I2C1

PC13 → PC13
PF3 → PF3
PF8-TIM13_CH1 → PF8-TIM13_CH1

LCD
PI5-LCD_R0 → R0
PJ8-LCD_R1 → R1
PD0-LCD_R2 → R2
PB2-LCD_R3 → R3
PD9-LCD_R4 → R4
PD8-LCD_R5 → R5
PD11-LCD_R6 → R6
PH9-LCD_R7 → R7
PK15-LCD_G0 → G0
PE3-LCD_G1 → G1
PJ4-LCD_G2 → G2
PE4-LCD_G3 → G3
PB10-LCD_G4 → G4
PF14-LCD_G5 → G5
PJ15-LCD_G6 → G6
PB7-LCD_G7 → G7
PK11-LCD_B0 → B0
PI11-LCD_B1 → B1
PK13-LCD_B2 → B2
PK12-LCD_B3 → B3
PD3-LCD_B4 → B4
PE11-LCD_B5 → B5
PF13-LCD_B6 → B6
PD4-LCD_B7 → B7
PJ9-LCD_CLK → CLK
PF6-LCD_DE → DE
PJ11-LCD_VSYNC → VSYNC
PJ10-LCD_HSYNC → HSYNC
→ LTDC

Arduino

ARD_ANA
PA0-ADC12_INP0 → A0
PE12-ADC3_INP6 → A1
PE13-ADC3_INP7 → A2
PC0-ADC12_INP10 → A3
PC1-ADC12_INP11 → A4
PC3-ADC12_INP13 → A5
→ ARD_ANA

ARD_DIG
PE7-UART7_RX → D0
PE8-UART7_TX → D1
PA8 → D2
PA7-TIM14_CH1 → D3
PI12 → D4
PC12-TIM15_CH1 → D5
PE6-TIM15_CH2 → D6
PF2 → D7
PF3 → D8
PB8-TIM16_CH1 → D9
PA4-SPI1_NSS-LPTIM2_CH1 → D10
PB5-SPI1_MOSI-TIM3_CH2 → D11
PG9-SPI1_MISO → D12
PG11-SPI1_SCK → D13
PH8-I2C3_SDA → D14
PH7-I2C3_SCL → D15
→ ARD_DIG

Camera

I3C
PD13-I3C1_SDA → SDA
PG7-I3C1_SCL → SCL
→ I3C1

PF4 → PF4
PD10 → PD10
PD14 → PD14
PE1 → PE1

Title: MCU Interfaces			
Project: STM32H5F5J Discovery Kit			
Variant: H5F5LJ			
Revision: C-01		Reference: MB2114	
Size: A3	Date: 09 July 2025	Sheet: 5 of 20	

Board power

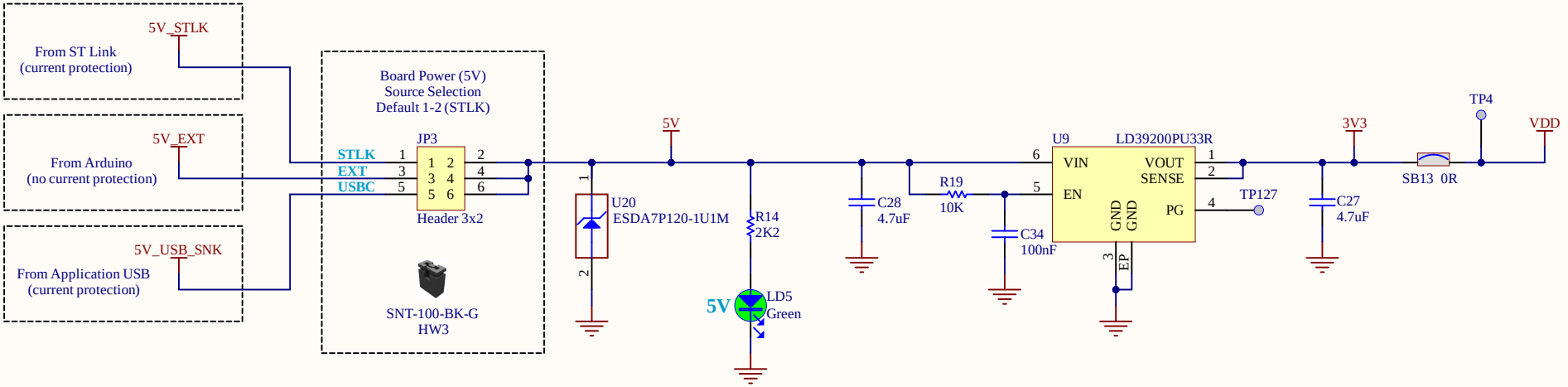

Title: **Board power**			
Project: **STM32H5F5J Discovery Kit**			
Variant: H5F5LJ			
Revision: C-01		Reference: MB2114	
Size: A4	Date: 09 July 2025	Sheet: 6 of 20	

Display

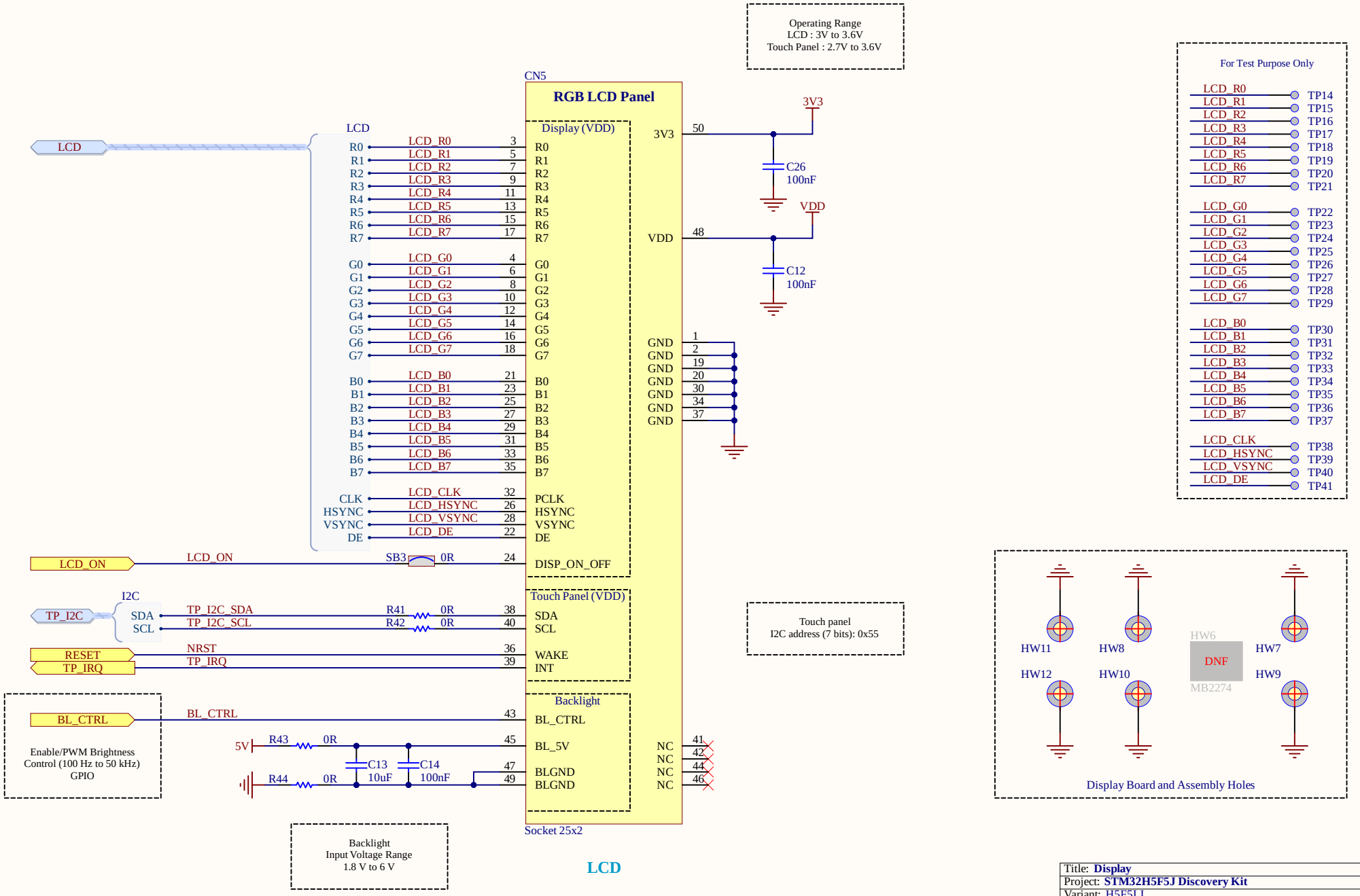

Title: **Display**	
Project: **STM32H5F5J Discovery Kit**	
Variant: H5F5LJ	
Revision: C-01	Reference: MB2114
Size: A4	Date: 09 July 2025 — Sheet: 7 of 20

Camera

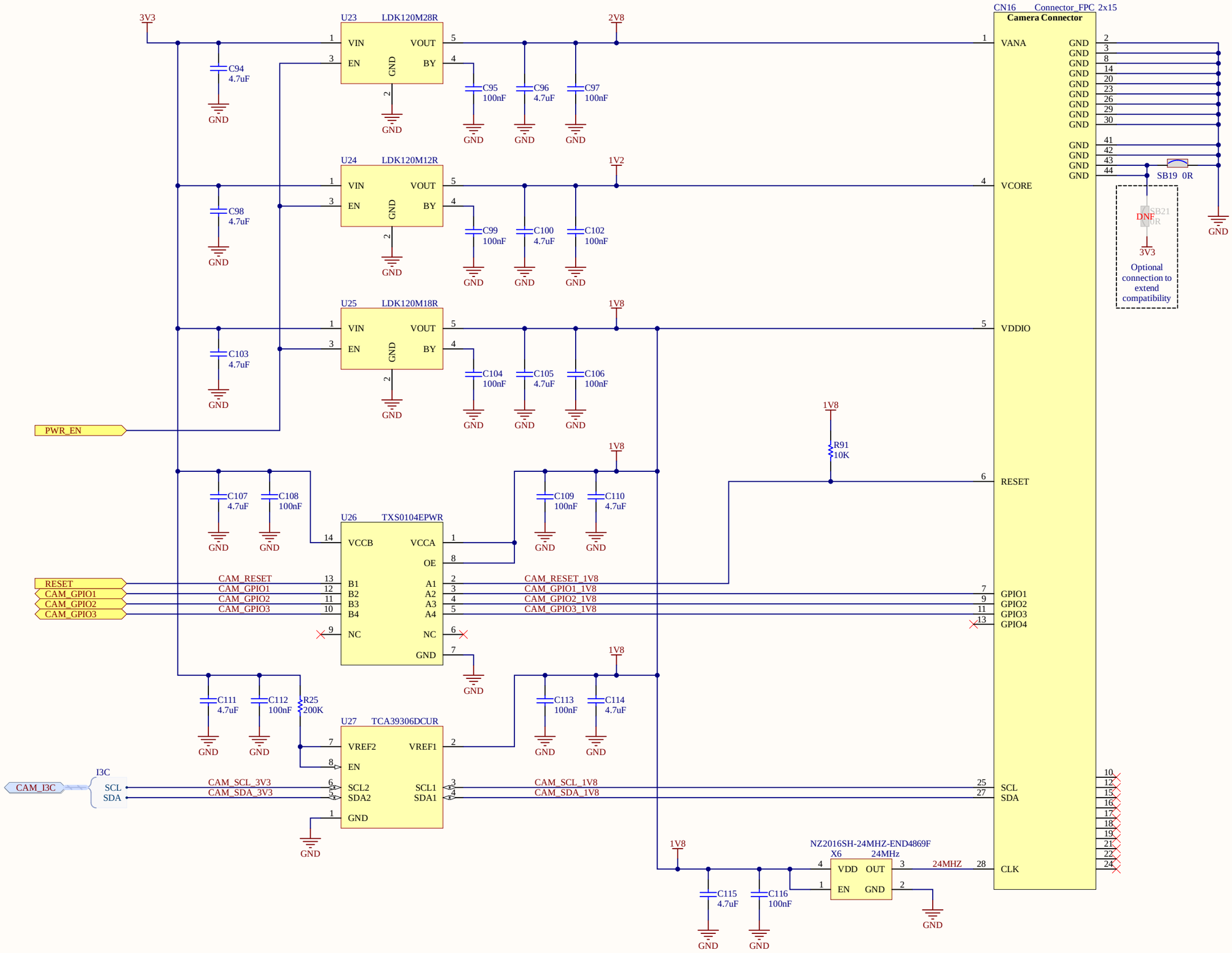

Title: **Camera**		
Project: **STM32H5F5J Discovery Kit**		
Variant: H5F5LJ		
Revision: C-01		Reference: MB2114
Size: A3	Date: 09 July 2025	Sheet: 8 of 20

Sensor

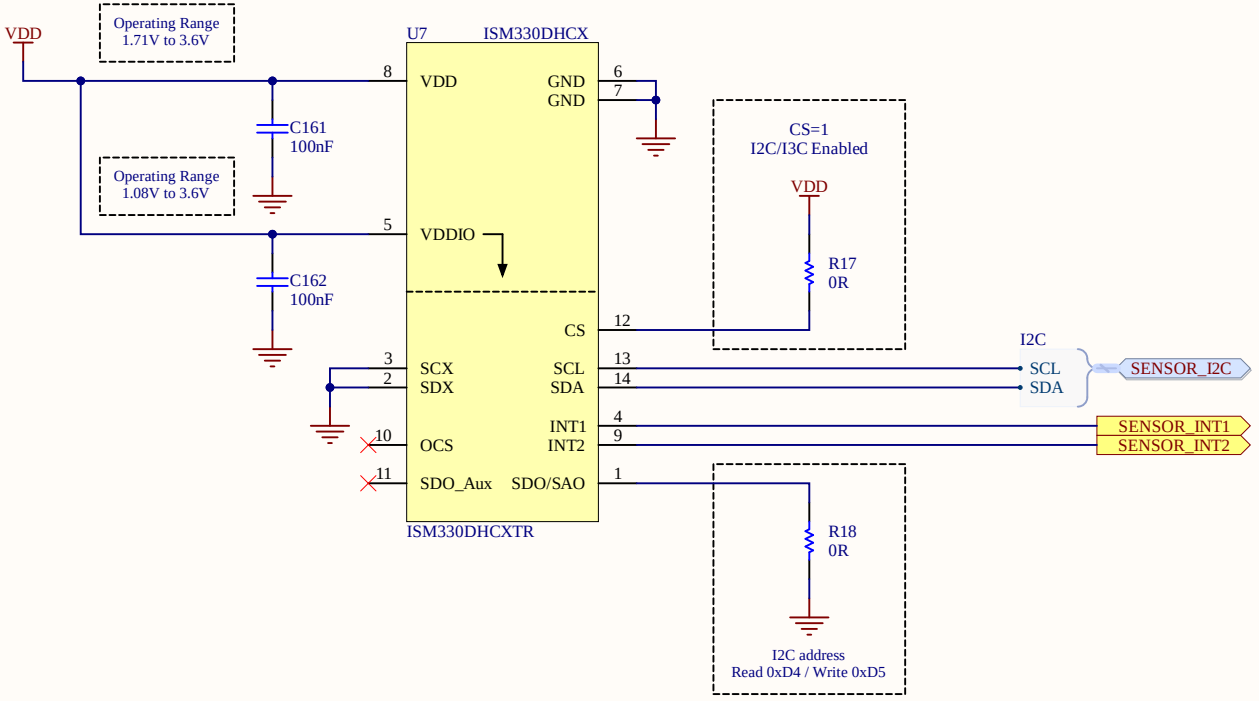

Title: **Sensor**		
Project: **STM32H5F5J Discovery Kit**		
Variant: H5F5LJ		
Revision: C-01		Reference: MB2114
Size: A4	Date: 09 July 2025	Sheet: 9 of 20

User Interface

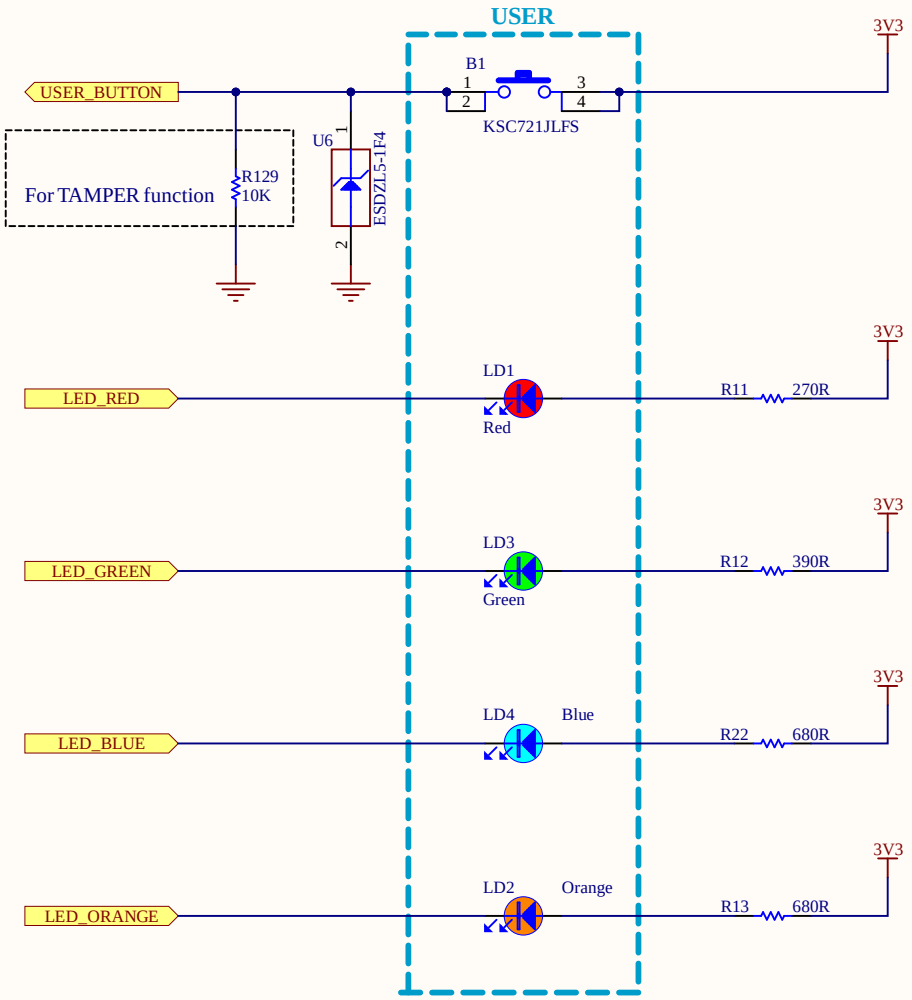

Title: **User Interface**		
Project: **STM32H5F5J Discovery Kit**		
Variant: H5F5LJ		
Revision: C-01		Reference: MB2114
Size: A4	Date: 09 July 2025	Sheet: 10 of 20

OctoSPI Flash Memory

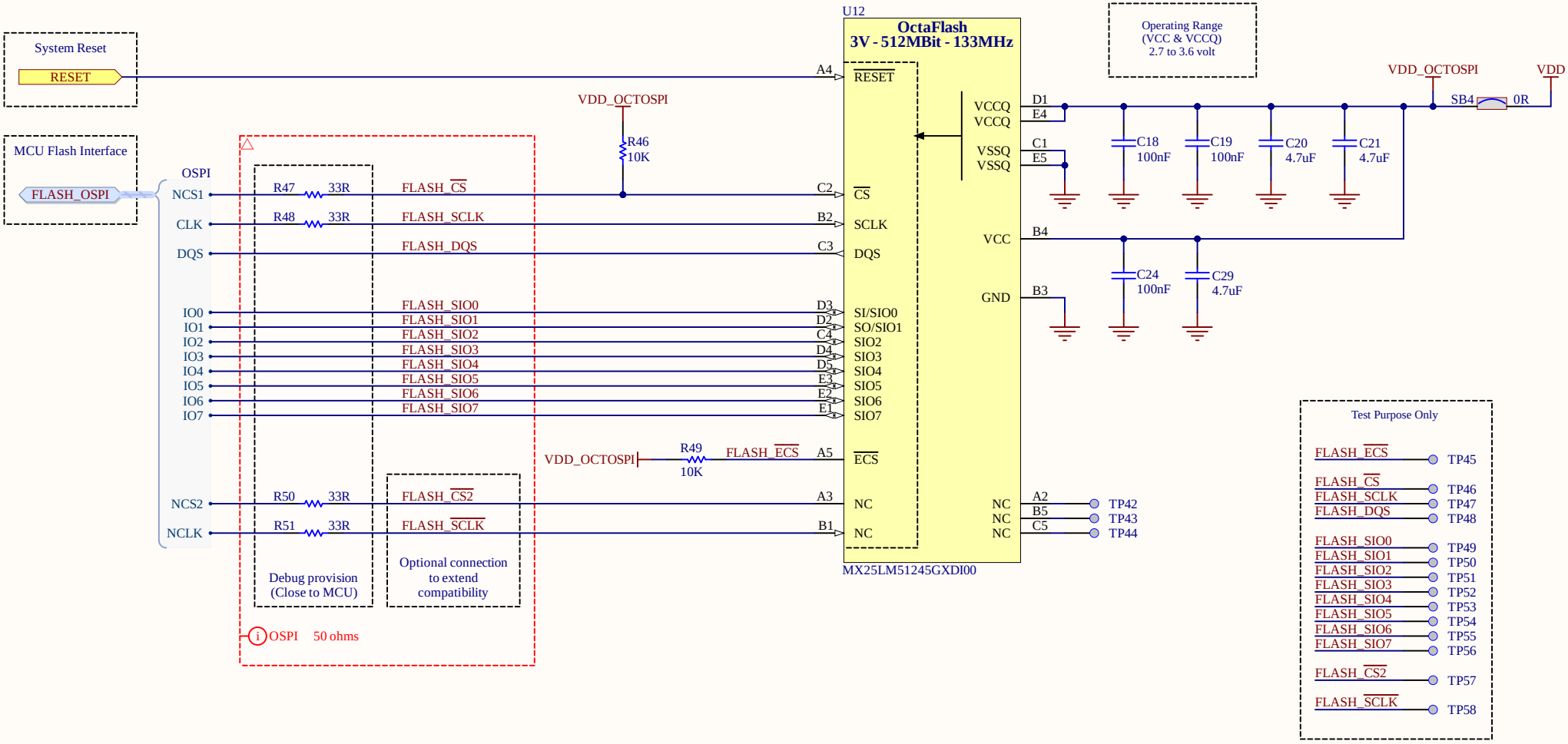

Title: **OctoSPI Flash Memory**			
Project: **STM32H5F5J Discovery Kit**			
Variant: H5F5LJ			
Revision: C-01		Reference: MB2114	
Size: A4	Date: 09 July 2025	Sheet: 11 of 20	

OctoSPI RAM Memory

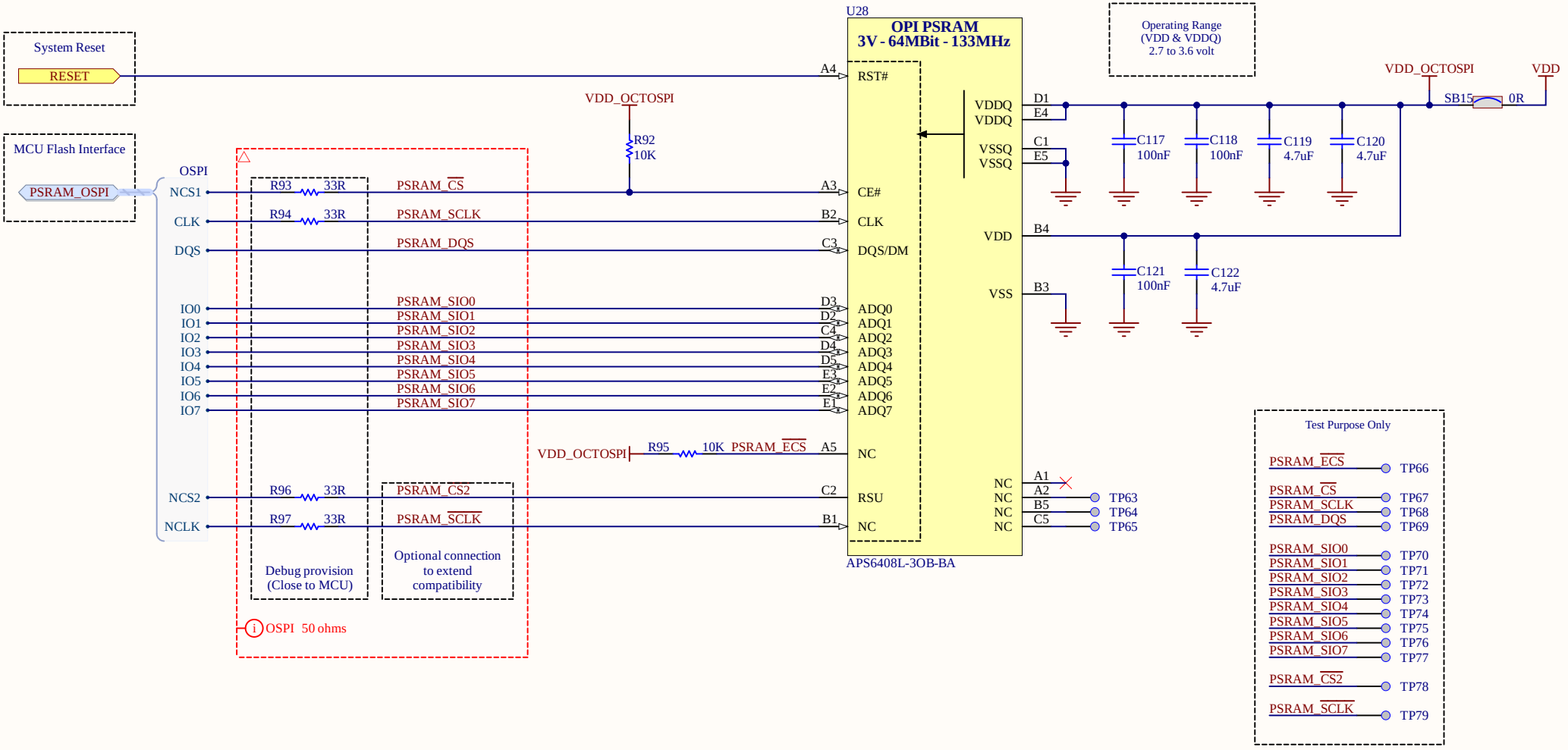

Title: **OctoSPI RAM Memory**			
Project: **STM32H5F5J Discovery Kit**			
Variant: H5F5LJ			
Revision: C-01		Reference: MB2114	
Size: A4	Date: 09 July 2025	Sheet: 12 of 20	

µSD Card

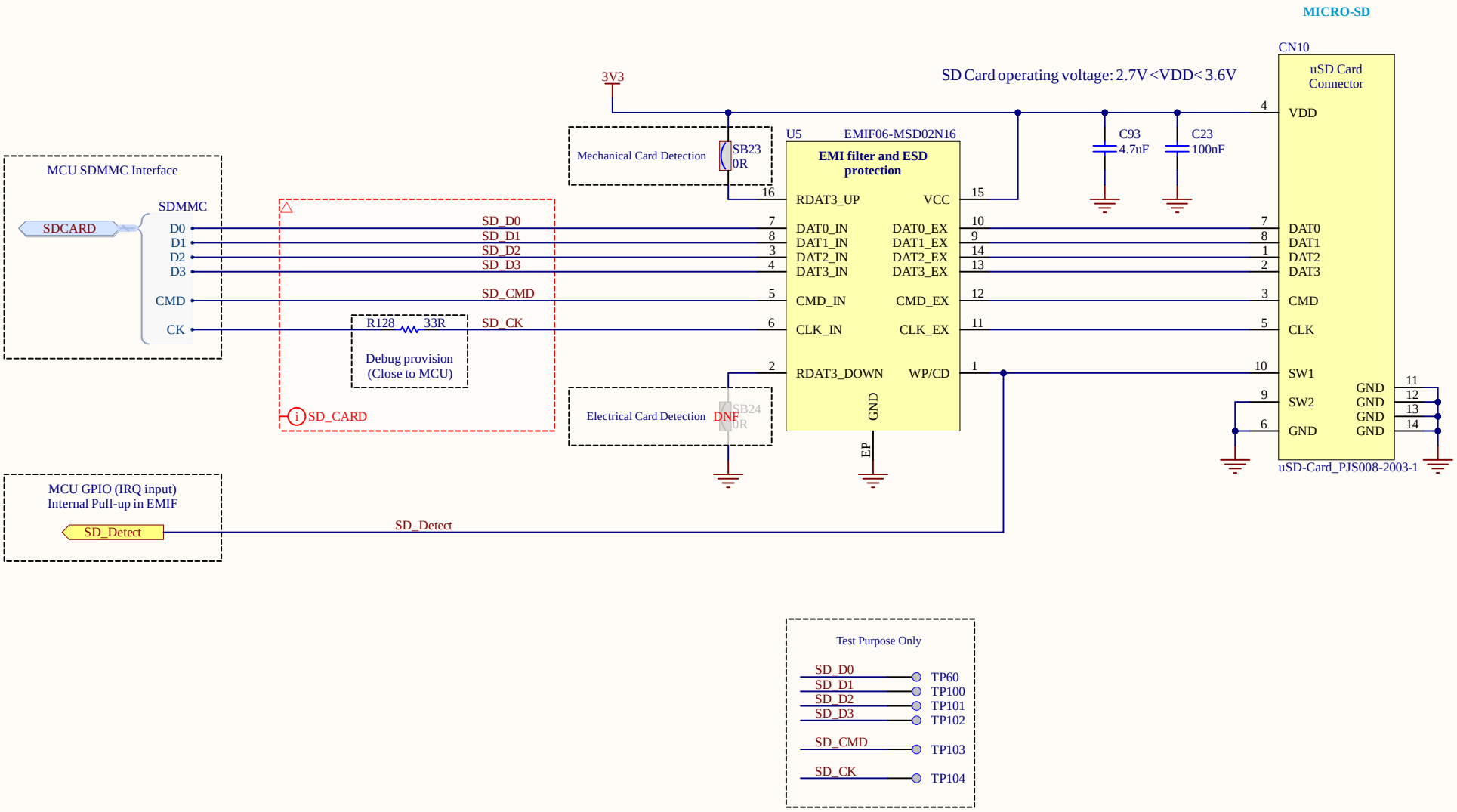

Title: **µSD Card**		
Project: **STM32H5F5J Discovery Kit**		
Variant: H5F5LJ		
Revision: C-01		Reference: MB2114
Size: A4	Date: 09 July 2025	Sheet: 13 of 20

Ethernet (10/100 Mbps)

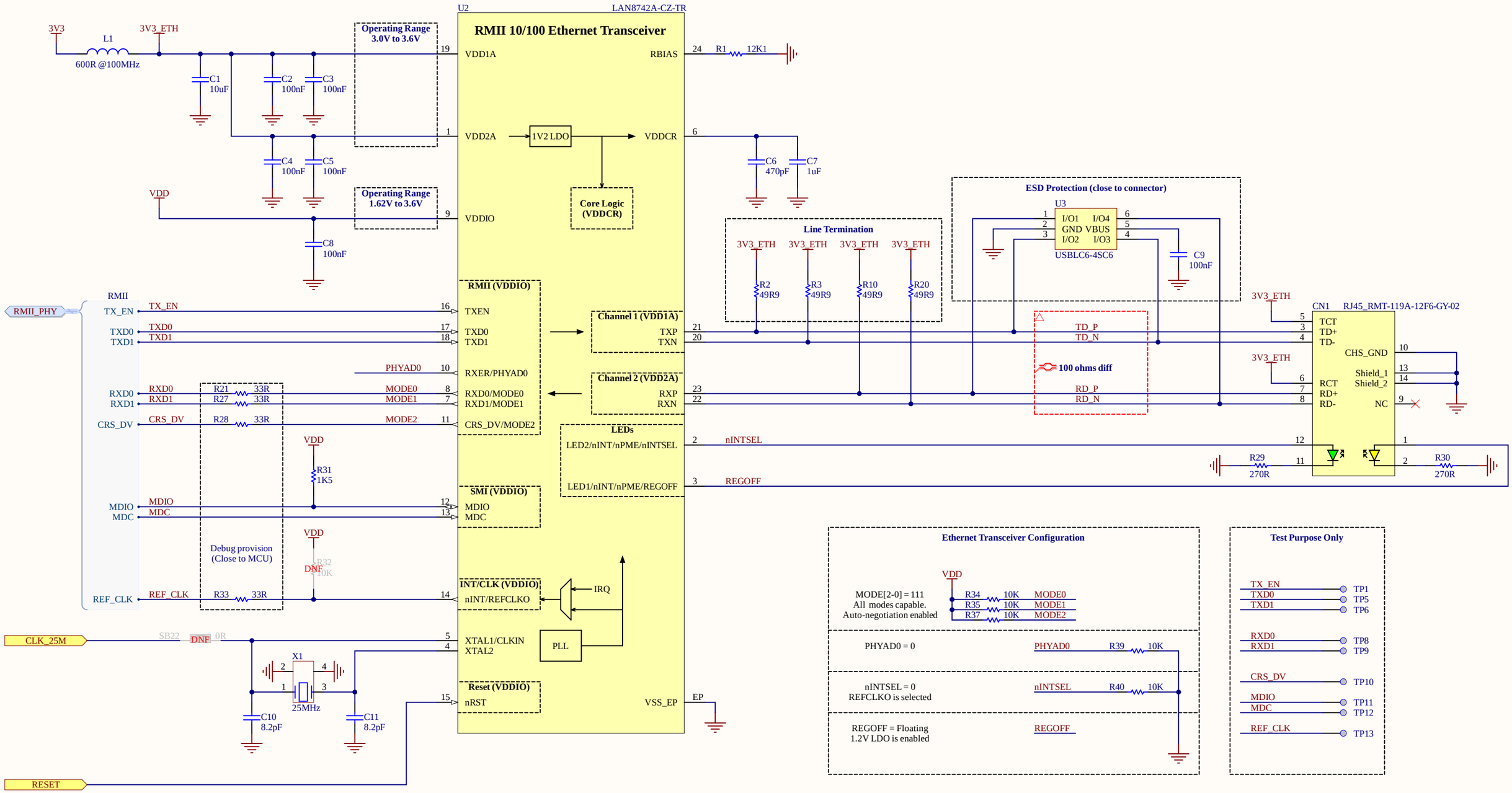

Title: **Ethernet (10/100 Mbps)**		
Project: **STM32H5F5J Discovery Kit**		
Variant: H5F5LJ		
Revision: C-01		Reference: MB2114
Size: A3	Date: 09 July 2025	Sheet: 14 of 20

USB-C Sink Only

SINK PATH (Bus Powered Mode)
2.5W / 5V / 500mA

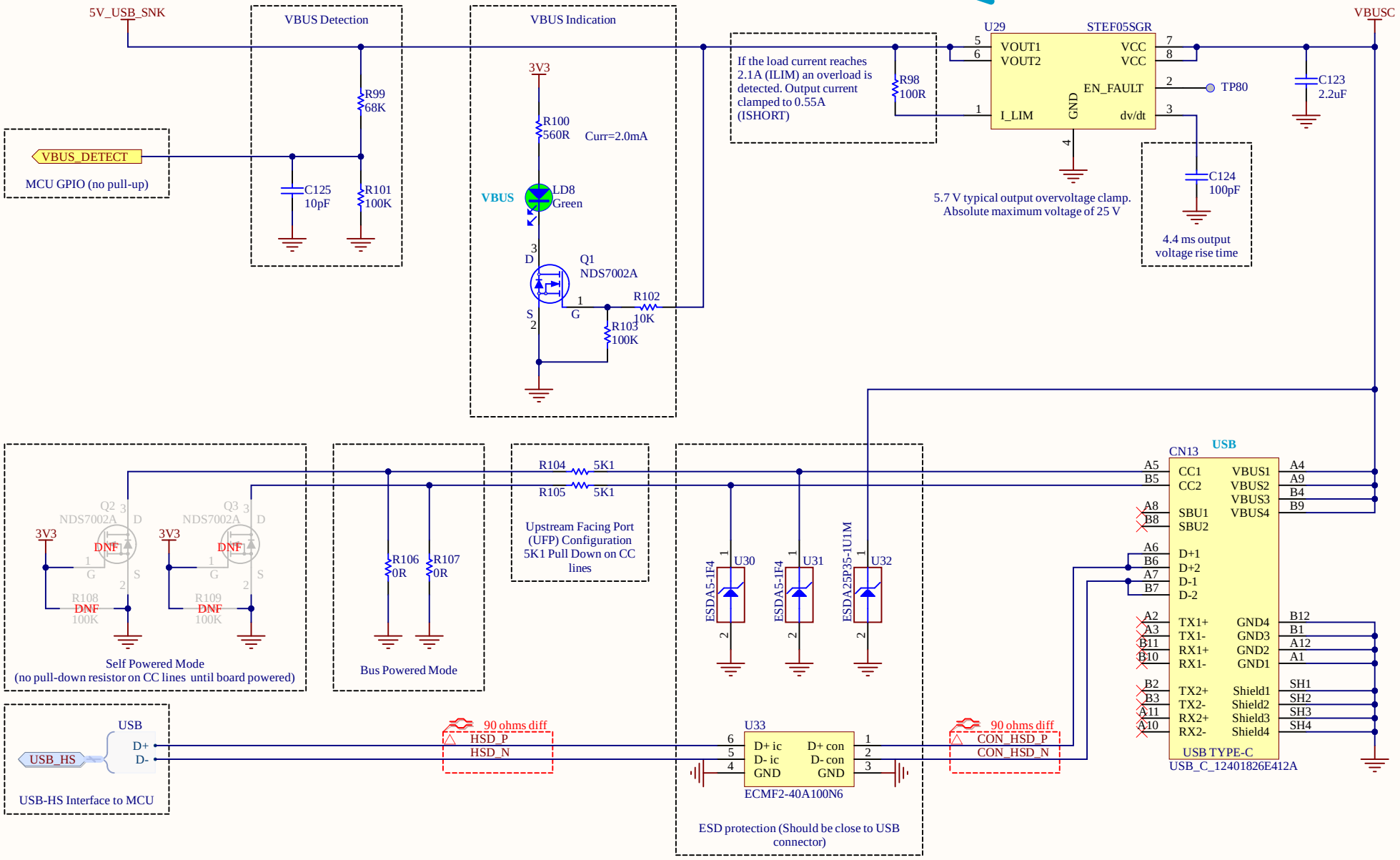

Title: **USB-C Sink Only**		
Project: **STM32H5F5J Discovery Kit**		
Variant: H5F5LJ		
Revision: C-01		Reference: MB2114
Size: A4	Date: 09 July 2025	Sheet: 15 of 20

Arduino UNO Rev3 Connectors

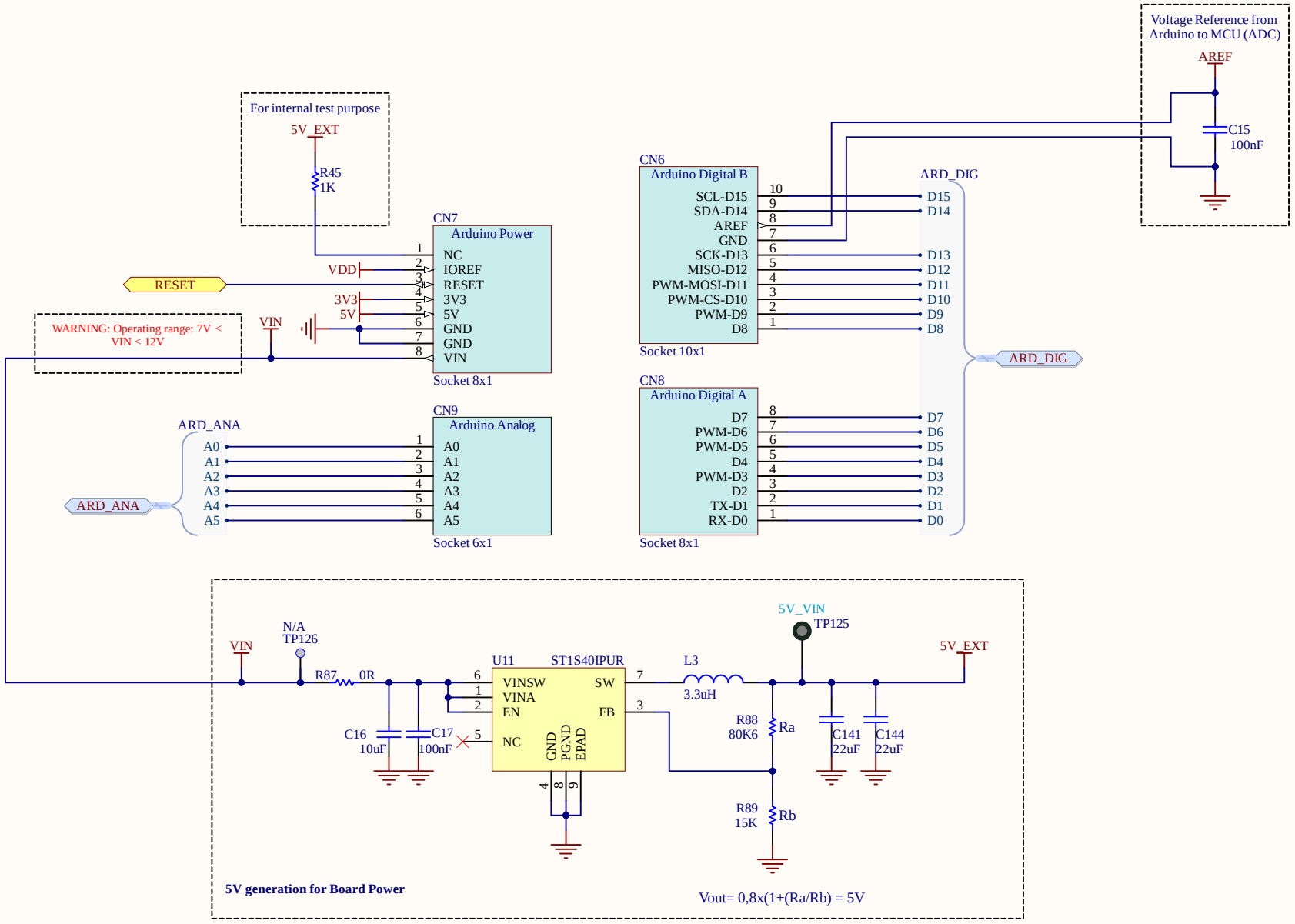

Title: **Arduino UNO Rev3 Connectors**		
Project: **STM32H5F5J Discovery Kit**		
Variant: H5F5LJ		
Revision: C-01		Reference: MB2114
Size: A4	Date: 09 July 2025	Sheet: 16 of 20

M2 Connectivity Level Shifters

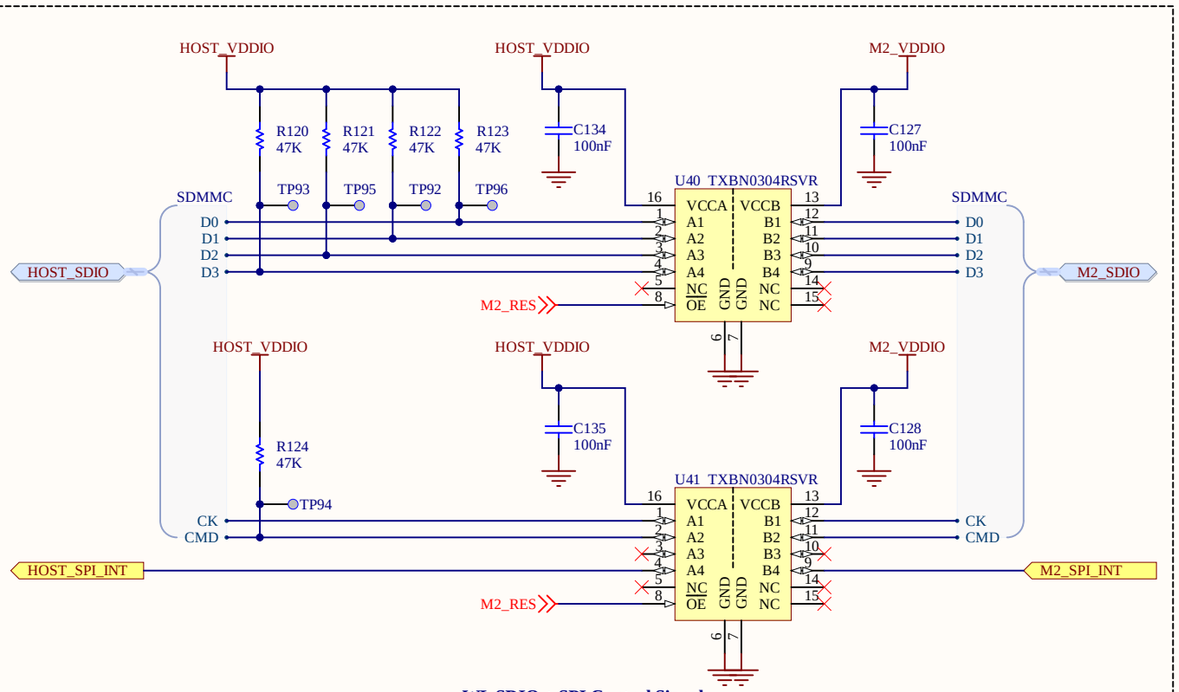

WL SDIO + SPI Control Signal

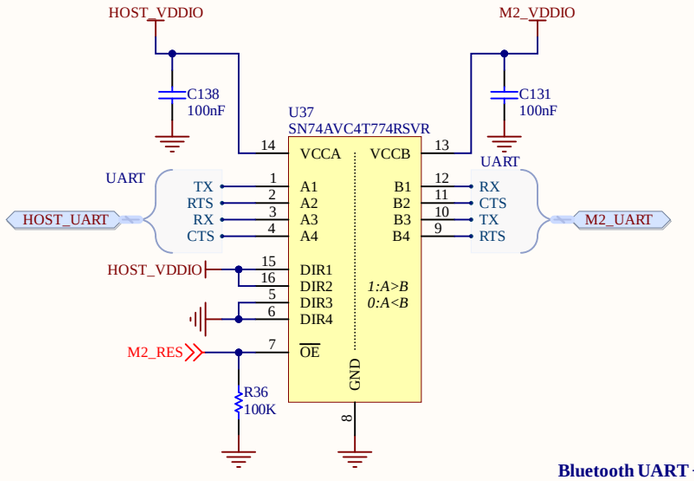

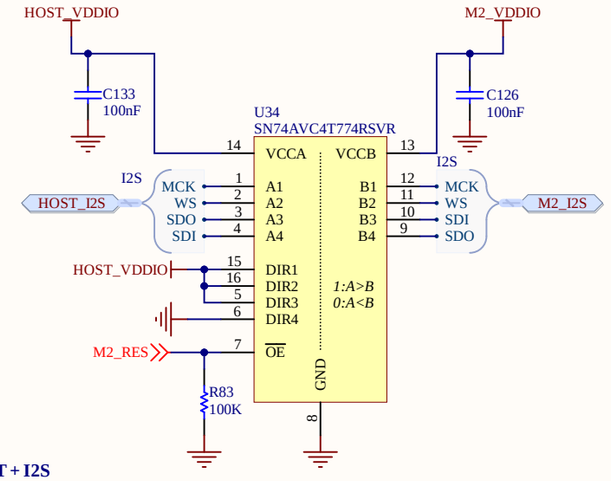

Bluetooth UART + I2S

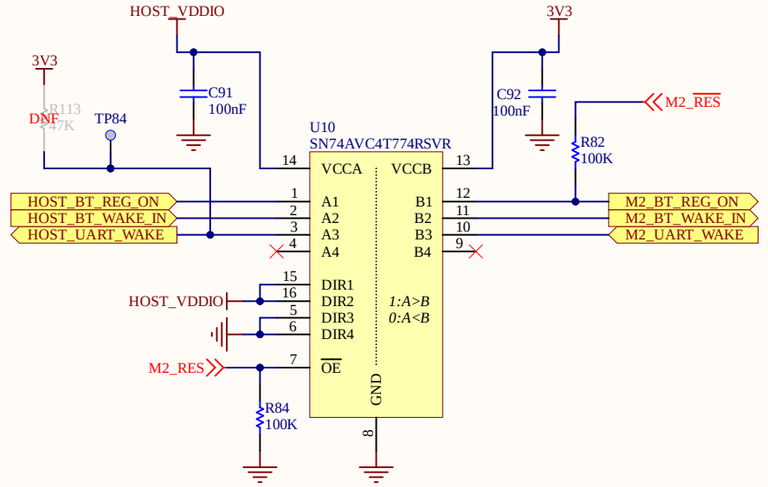

Bluetooth

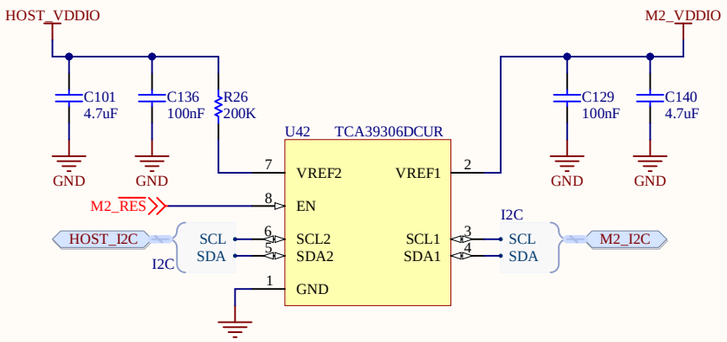

I2C

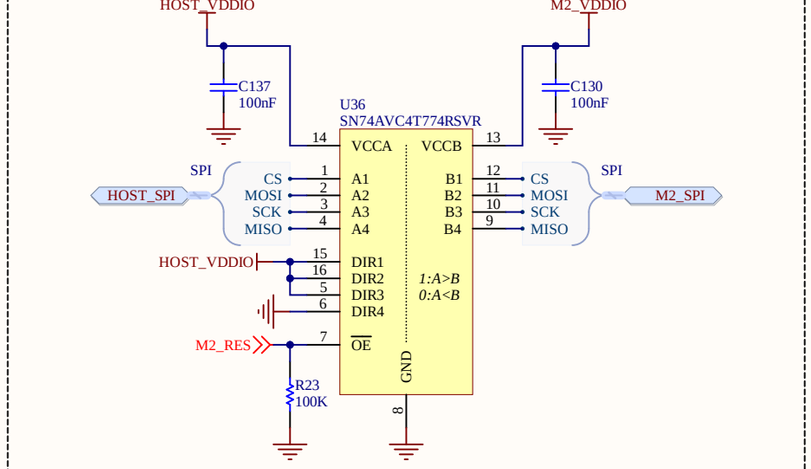

SPI

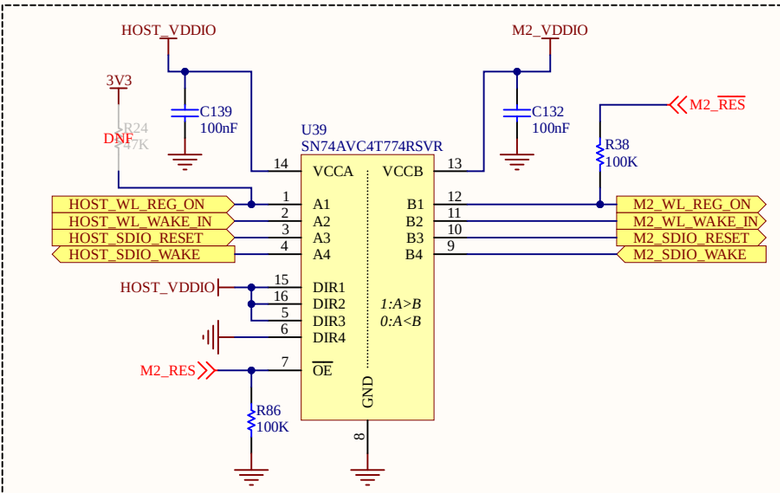

WL Control Signals

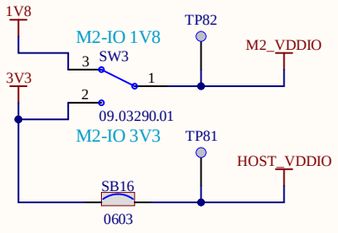

M2 Voltage Selection

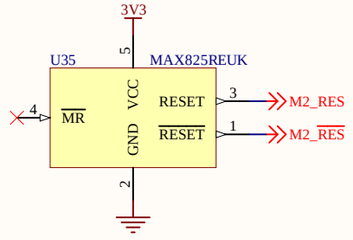

Power supervisor to keep M2 signals in high impedance until voltage stable

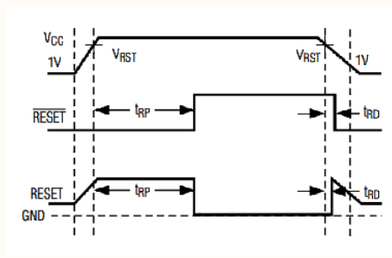

Title: **M2 Connectivity Level Shifters**		
Project: **STM32H5F5J Discovery Kit**		
Variant: H5F5LJ		
Revision: C-01		Reference: MB2114
Size: A3	Date: 09 July 2025	Sheet: 17 of 20

M2 Connectivity

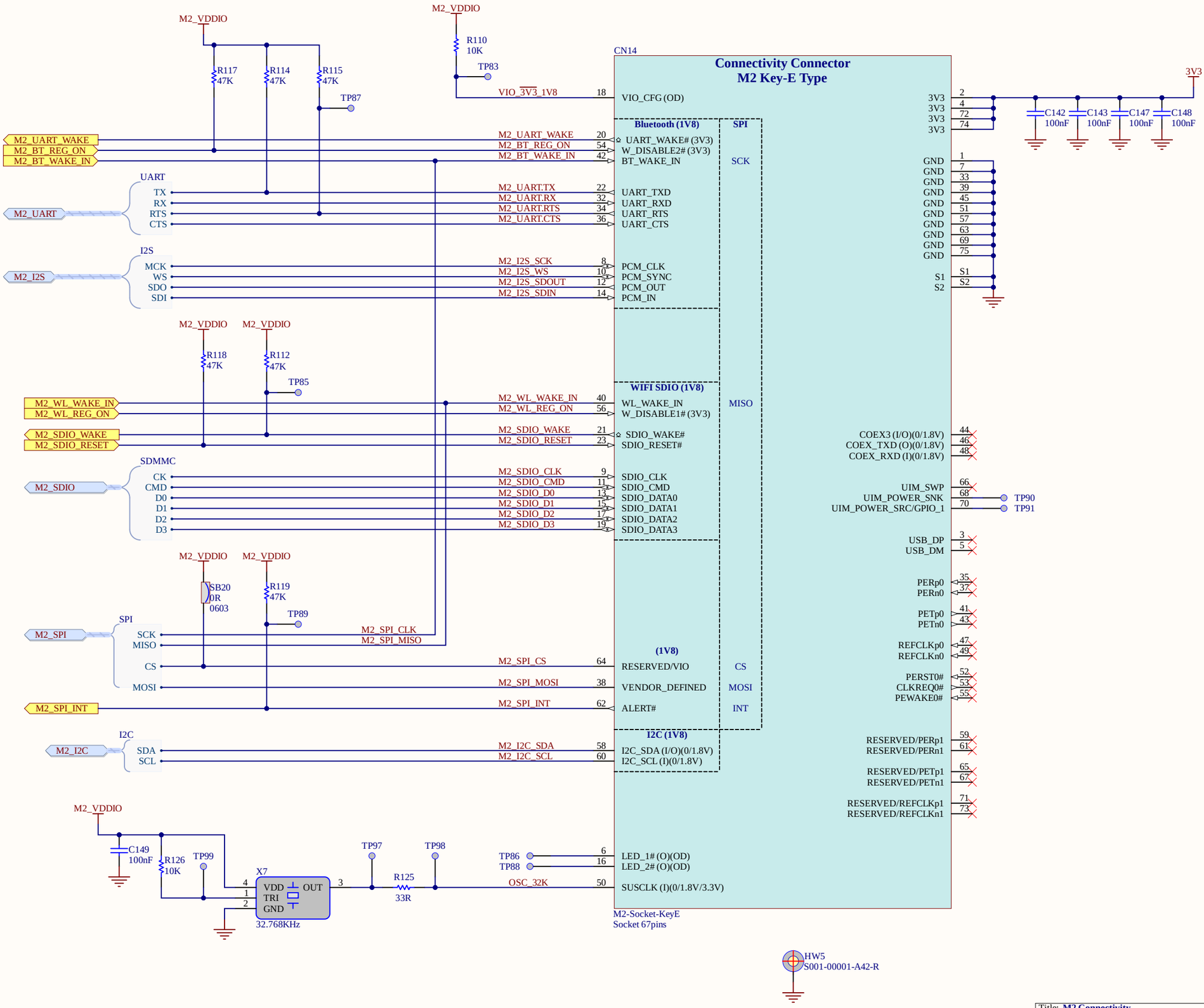

Title: **M2 Connectivity**		
Project: **STM32H5F5J Discovery Kit**		
Variant: H5F5LJ		
Revision: C-01		Reference: MB2114
Size: A3	Date: 09 July 2025	Sheet: 18 of 20

STLINK-V3EC

STLINK

USB_C_12401826E412A

5V STLK option for Board Power - Overvoltage and Overcurrent protection

5V_STLK OVERCURRENT PROTECTION MANAGEMENT

	T_PWR_SEL2/PD5	T_PWR_SEL1/PD4
PowerDefault.SNK *(current limit: 550mA)*	Hi-Z	Hi-Z
Power1.5.SNK *(current limit: 1.66A)*	Hi-Z	0
Power3.0.SNK *(current limit: 3.2A)*	0	0

Hi-Z = IO set in high impedance

Backup for 5V STLK generation

ST-LINK Power (3V3/300mA)

From STLINK USB

From Board Power

Power Status LED

Red/Green

STLK PWR

STLINK LED

Red/Green

STLK COM

Interface with Target MCU

JTAG

VCP UART

Target VIO reference

Target external supply source indicator

Reserved

STM32F723IEK6

Title:	**STLINK-V3EC**
Project:	**STM32H5F5J Discovery Kit**
Variant:	H5F5LJ
Revision:	C-01
Reference:	MB2114
Size: A3	Date: 09 July 2025
Sheet:	19 of 20

External Debug Connectors

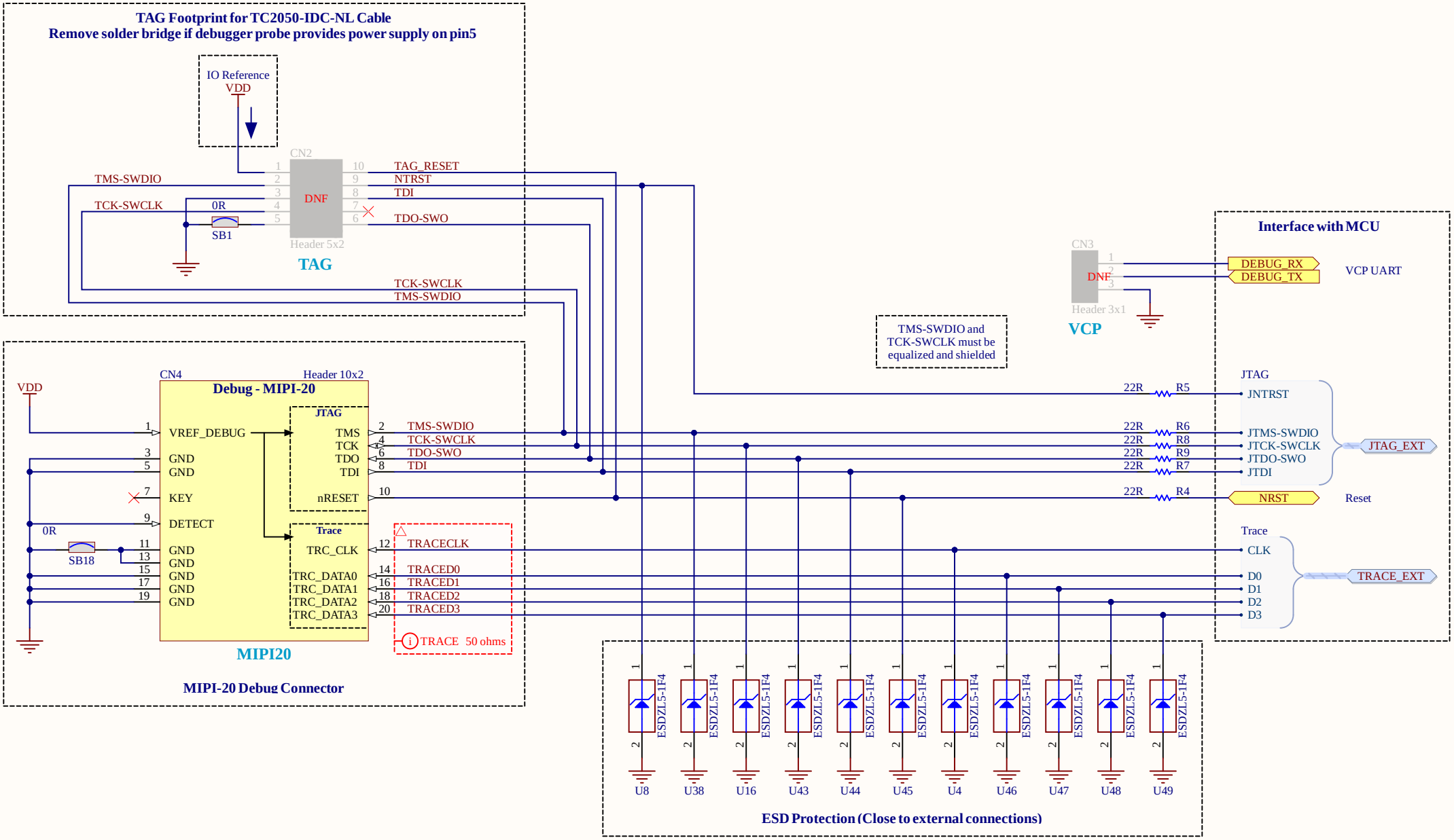

Title: **External Debug Connectors**		
Project: **STM32H5F5J Discovery Kit**		
Variant: H5F5LJ		
Revision: C-01		Reference: MB2114
Size: A4	Date: 09 July 2025	Sheet: 20 of 20

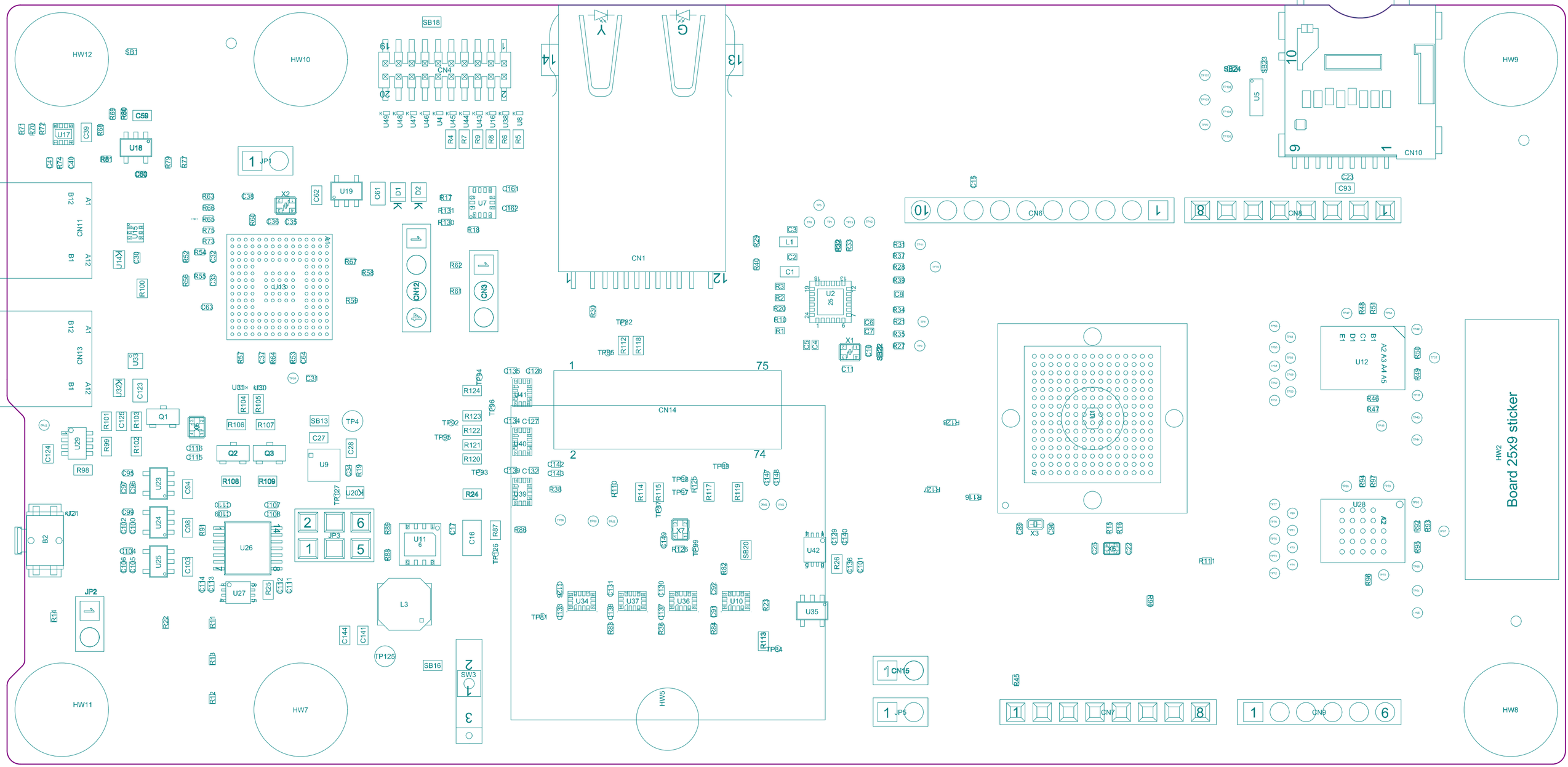

Project: STM32H5F5J Discovery Kit	
Layer: M14-Top Assembly	Gerber: .GM14
Variant: H5F5LJ	Ref: MB2114
Date: 09 July 2025	Rev: C

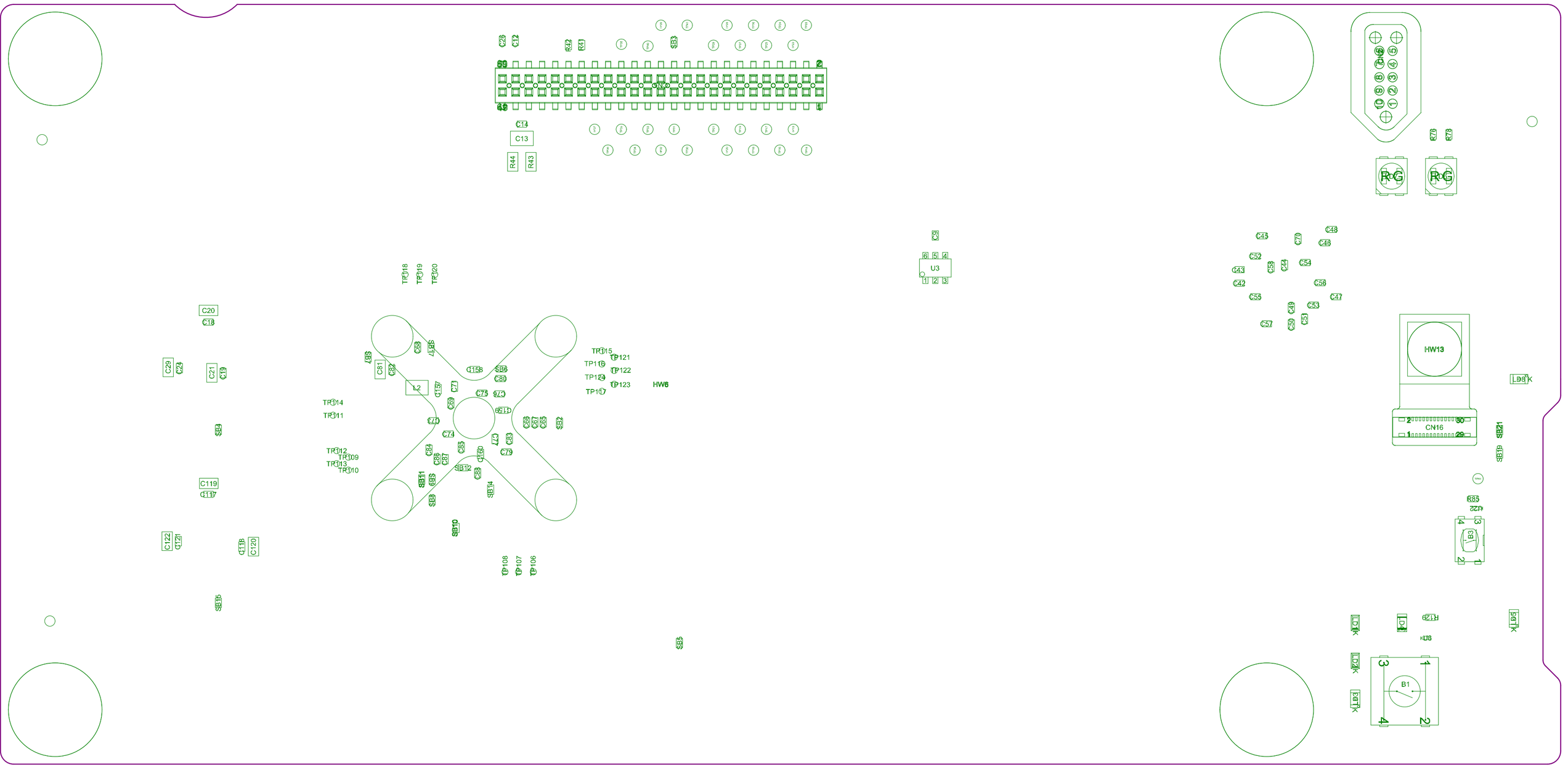
CN16
HW13
HW6
U3
B1
B3
TP121
TP122
TP123
TP124
TP125
TP126
TP127
TP128
TP129
TP130
TP131
TP132
TP133
TP134
TP135
TP136
TP137
TP138
TP139
TP140
TP141
TP142
TP143
TP144
TP145
TP146
TP147
TP148
TP149
TP150
TP151
TP152
TP153
TP154
TP155
TP156
TP157
TP158
TP159
TP160

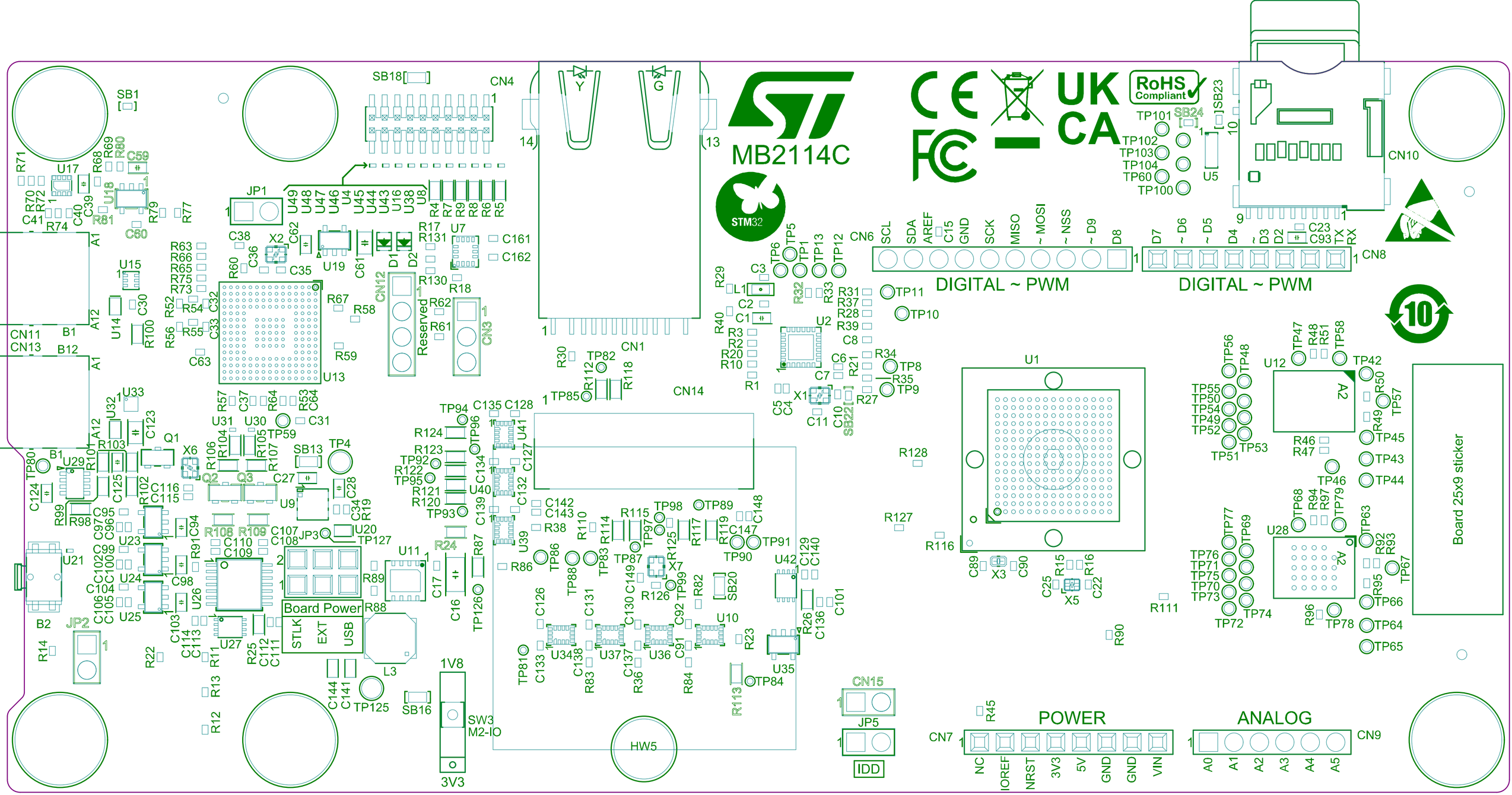

Top Overlay .GTO

CART-6L

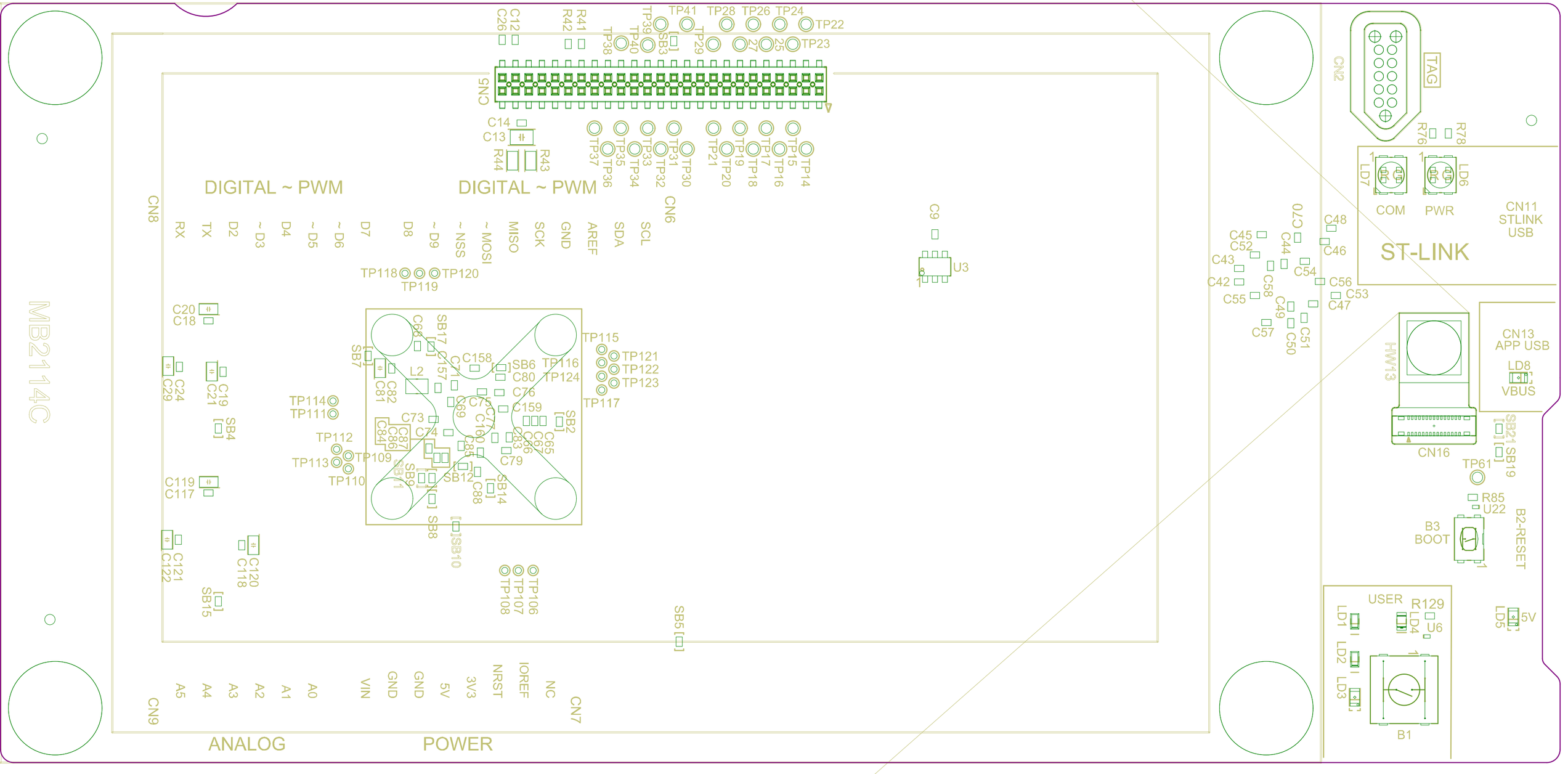

Bottom Overlay .GBO