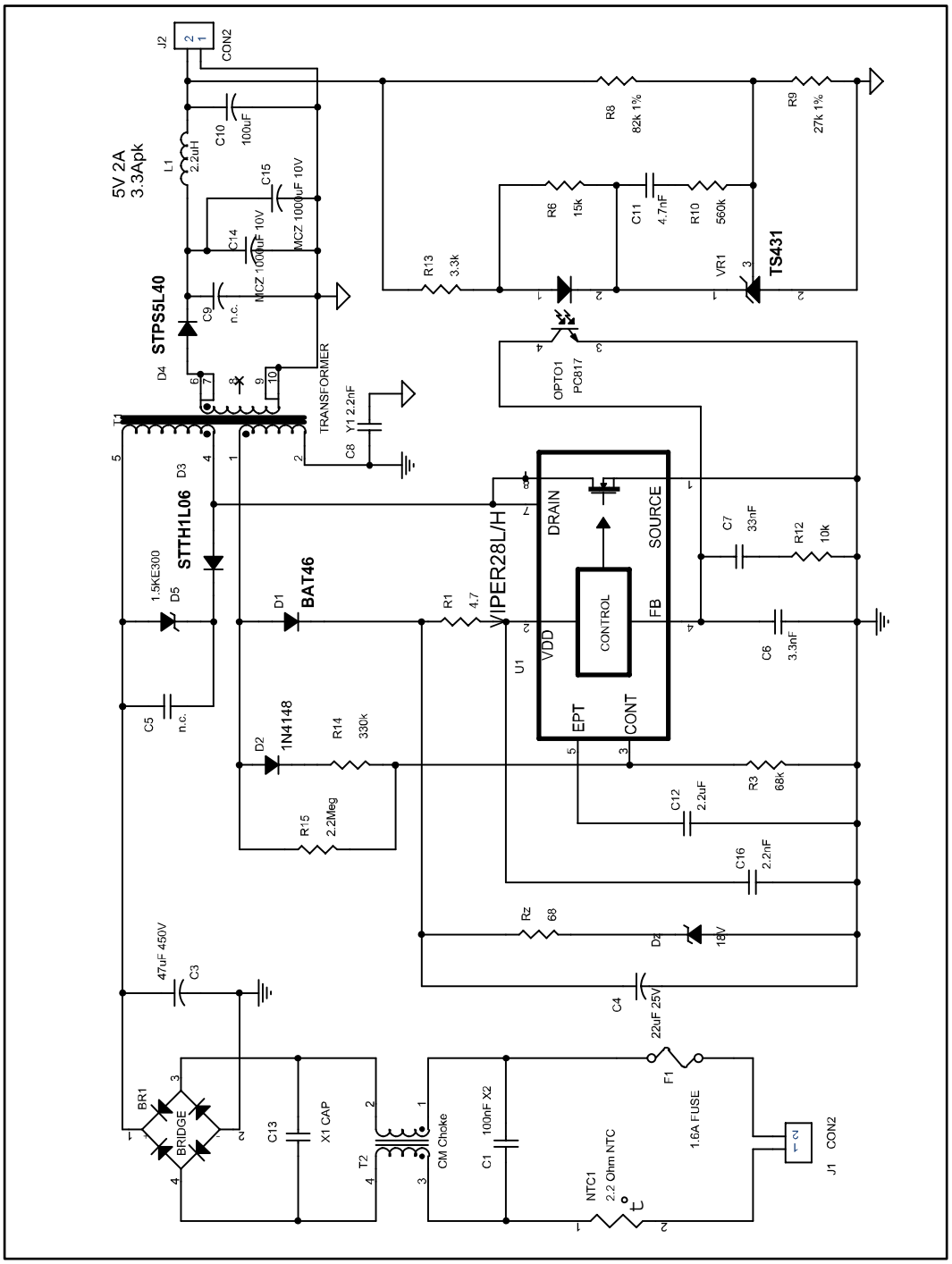STEVAL-ISA126V1 Schematic circuit