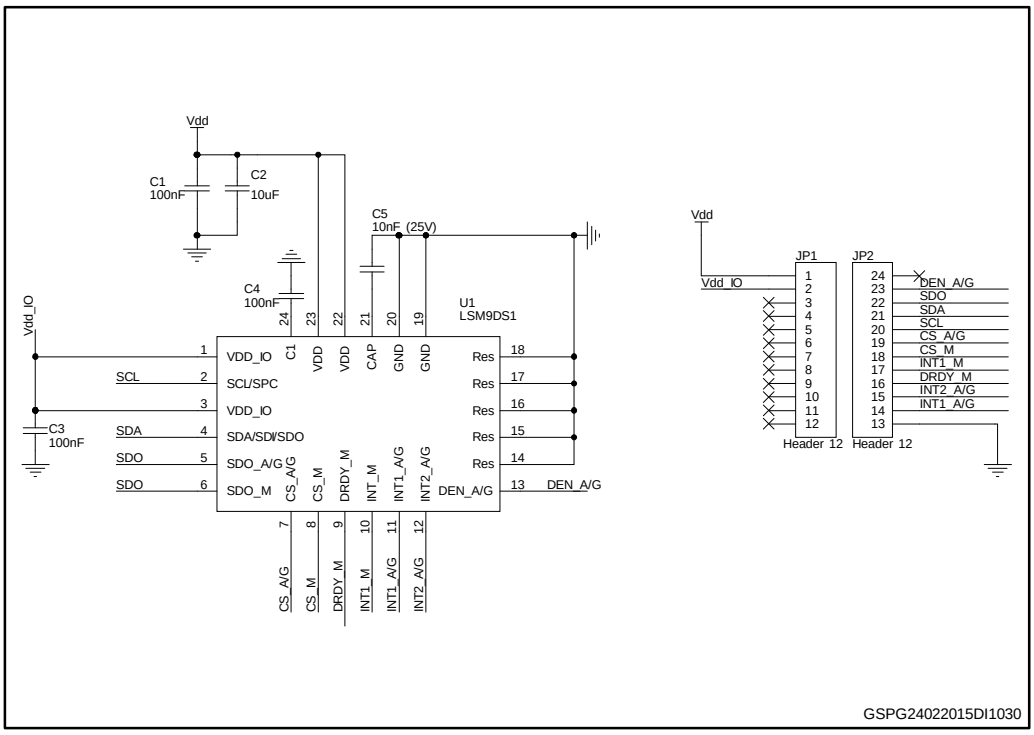STEVAL-MKI159V1 Schematic diagram