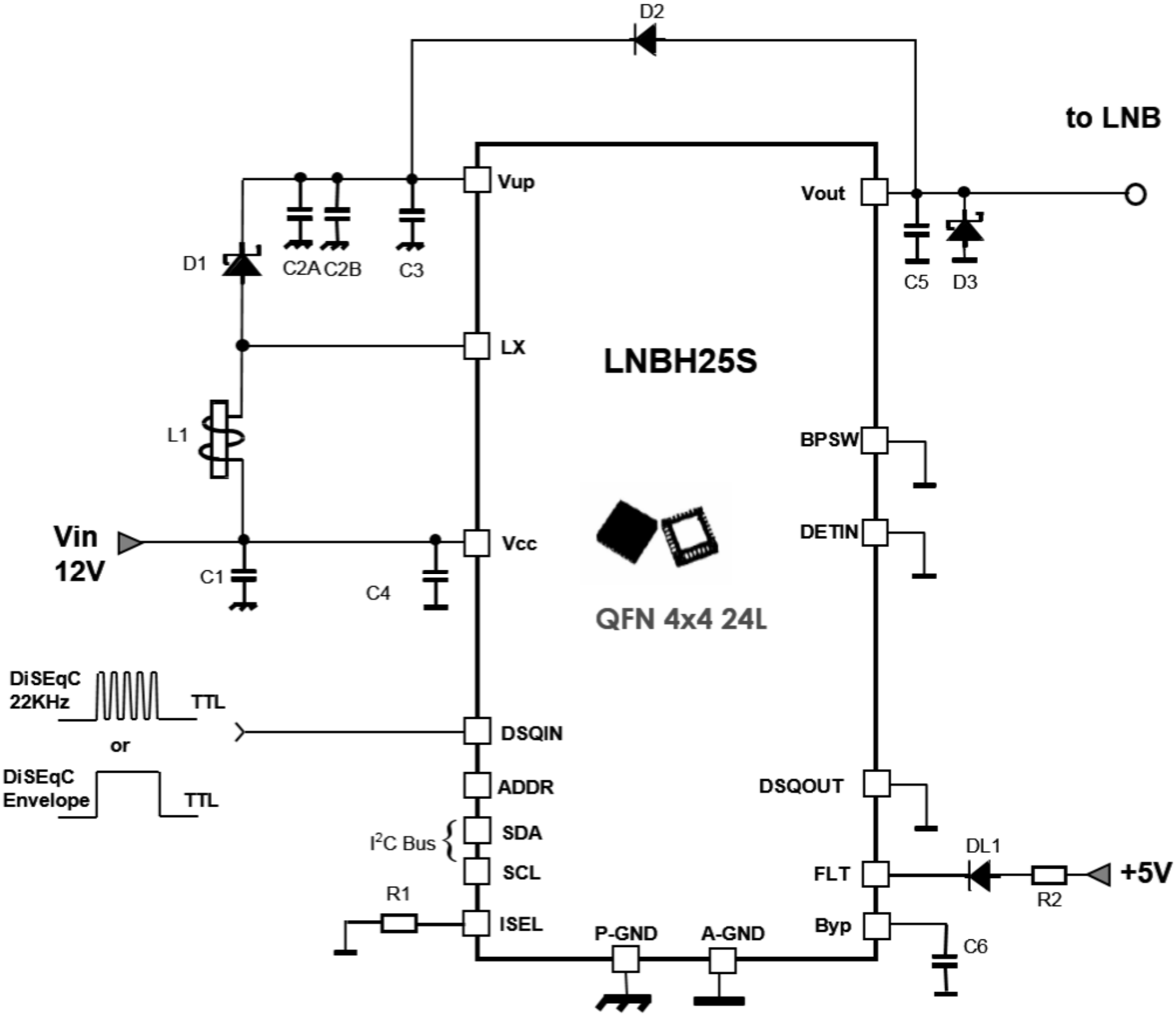
D2
to LNB
Vup
Vout
D1
C2A
C2B
C3
C5
D3
LX
LNBH25S
L1
BPSW
Vin
12V
Vcc
DETIN
C1
C4
QFN 4x4 24L
DiSEqC
22KHz
TTL
or
DiSEqC
Envelope
TTL
DSQIN
ADDR
DSQOUT
I²C Bus
SDA
SCL
DL1
FLT
+5V
R2
R1
ISEL
P-GND
A-GND
Byp
C6