UM2171
User manual

Getting started with the STEVAL-IHT003V2 e-STARTER evaluation board based on ACST6 and X02

Introduction

The STEVAL-IHT003V2 evaluation board represents an innovative solution patented by STMicroelectronics to reduce the power losses caused by positive temperature coefficient (PTC) resistors in compressor starter circuits.

The solution features an ACST6 AC switch device to turn off the PTC current after motor start-up; note that the traditional PTC is still used in the electronic starter circuit as it increases circuit safety for AC switch short-circuits or diode mode failure (ref. EN60335-1).

The design reduces starter standby losses from (typ.) 2.5 W to 380 mW for 230 V applications, or 2.5 W to 40 mW for 100 V applications.

Before using the board with a compressor, the PTC behavior must be checked (see *Section 1: "Getting started"*) and different resistor values may be required.

Figure 1: STEVAL-IHT003V2 e-STARTER evaluation board

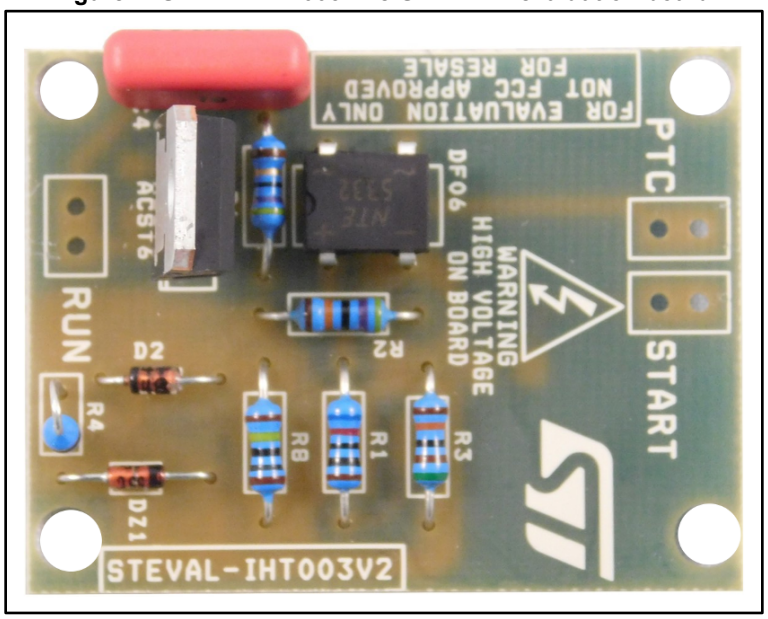

Contents

1 Getting started 5
1.1 Voltage level setting 5
1.2 Connections 7
2 Operating principle 8
2.1 Compressor starter application 8
2.2 Standard PTC behavior 9
2.3 ON state 10
3 Board performance 12
3.1 Maximum current 12
3.2 Standby power losses 13
3.3 Fast transient voltages 13
3.4 Surge voltages 14
3.5 Reliability and safety 15
4 Schematic diagram 16
5 Component layout and printed circuit board 17
6 Bill of materials 20
7 Conclusions 22
8 Revision history 23

List of tables

Table 1: STEVAL-IHT003V2 bill of materials 20
Table 2: Document revision history 23

List of figures

Figure 1: STEVAL-IHT003V2 e-STARTER evaluation board....1
Figure 2: VPTC1 and VPTC2 definitions....5
Figure 3: e-STARTER connections....7
Figure 4: Compressor starter application....8
Figure 5: PTC operation, no RUN cap. (compressor OFF time less than 10 min, mains: 198 V RMS)....9
Figure 6: PTC operation with RUN cap. (compressor OFF time less than 1 min, mains: 264 V RMS)....9
Figure 7: Voltage spikes at zero current....10
Figure 8: PTC turnoff....11
Figure 9: e-STARTER maximum current versus conduction time....12
Figure 10: Spurious e-STARTER triggering with a 2 kV surge (230 V compressor)....14
Figure 11: e-STARTER voltage limited to 648 V thanks to the RUN capacitor (2 kV IEC61000-4-5 surge)....14
Figure 12: STEVAL-IHT003V2 circuit schematic....16
Figure 13: e-STARTER topside silk screen....17
Figure 14: e-STARTER SMD component layout (bottom view)....18
Figure 15: e-STARTER copper side (bottom view, dimensions in cm)....19

1 Getting started

1.1 Voltage level setting

To make the STEVAL-IHT003V2 evaluation board operate with a given compressor-PTC couple, you must check the R3/R4 resistor (see *Figure 12: "STEVAL-IHT003V2 circuit schematic"*) bridge ratio.

The PTC voltage level ($V_{PTC-OFF}$) for a sufficient START winding activation time has to be defined.

PTC peak voltages must be measured in the ON and in OFF states (V_{PTC1} and V_{PTC2} respectively) as shown in *Figure 2: "VPTC1 and VPTC2 definitions"*, for the whole range of operation; that is measuring:

- line voltage min. and max. values
- at least one sample of all different compressors that could be used with the e-STARTER
- ambient temperature min. and max. values.

Figure 2: VPTC1 and VPTC2 definitions

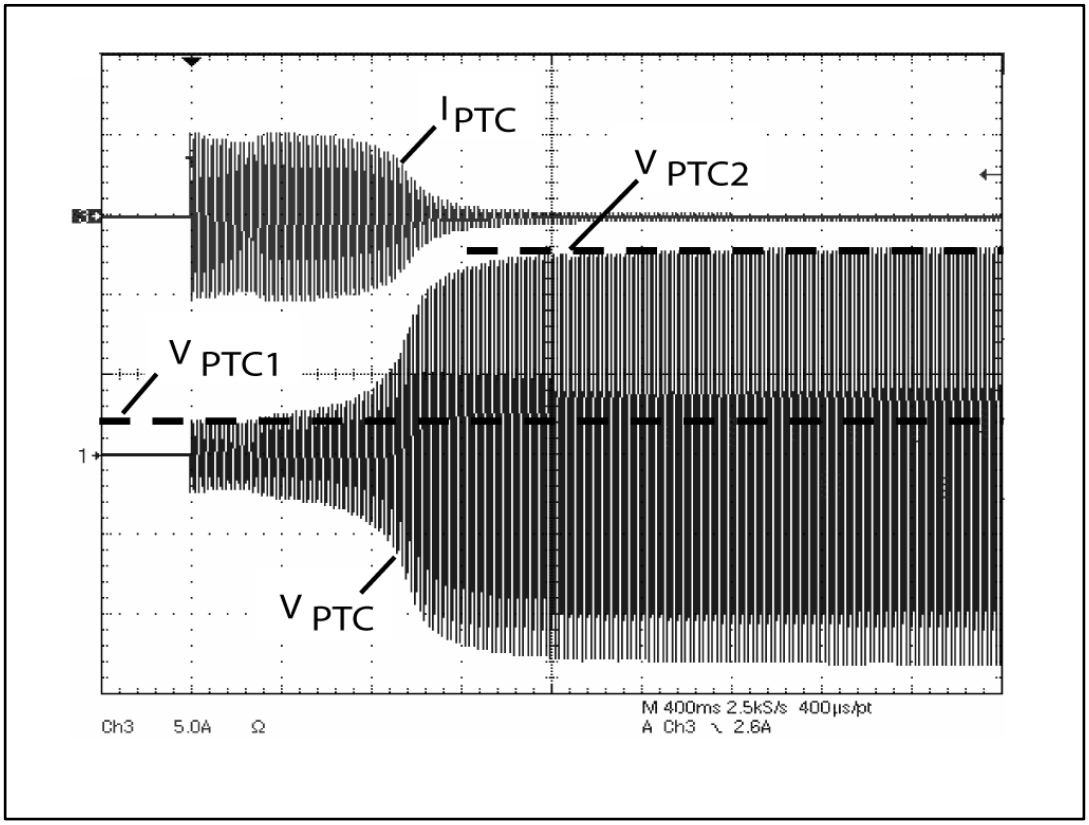

$V_{PTC-OFF}$ level has to be higher than V_{PTC1} maximum value to ensure the ACST6 turns on at the beginning. $V_{PTC-OFF}$ level also has to be lower than V_{PTC2} minimum value to turn the ACST6 off at the end of the required PTC conduction time.

To ensure a safe margin between these two levels, $V_{PTC\text{-}OFF}$ should be calculated using the following equation:

Equation 1

$$V_{PTC_OFF} = \frac{V_{PTC1MAX} + V_{PTC2MIN}}{2}$$

According to *Figure 6: "PTC operation with RUN cap. (compressor OFF time less than 1 min, mains: 264 V RMS)"*, the maximum V_{PTC1} level is 220 V. According to *Figure 5: "PTC operation, no RUN cap. (compressor OFF time less than 10 min, mains: 198 V RMS)"*, the minimum V_{PTC2} level is 320 V.

Using *Equation 1*, a 250 V level for V_{PTC_OFF} ends the START winding conduction information.

To achieve this level detection, use the following equation:

Equation 2

$$R4 = R3 \cdot \frac{V_{DZ1}}{V_{PTC_OFF} - V_{DZ1} - V_{BE_Q1}}$$

where V_{DZ1} is the Zener diode clamping level and V_{BE_Q1} is the forward voltage drop of the Q1 transistor base-emitter junction.

With R3 set at 510 kW (to reduce the power losses), V_{DZ1} and V_{BE_Q1} are 15 V and 0.6 V respectively, then R4 is calculated through:

Equation 3

$$R4 = 510 \cdot 10^3 \cdot \frac{15}{250 - 15 - 0.6} = 32.6 \cdot 10^3 \cong 30k\Omega$$

1.2 Connections

The e-STARTER has to be connected to a PTC and a compressor as shown in *Figure 3: "e-STARTER connections"*, according to the instructions given on the topside silk screen. The RUN capacitor (CRUN) is optional and has to be used according to the compressor type. A start capacitor could also be placed in series between the PTC and the e-STARTER.

The evaluation board must only be used by skilled electrical technicians or engineers as it has to be plugged into the mains and there is no insulation between the mains voltage and the accessible conductive parts. Furthermore, there is no insulation varnish on solders. Perform measurements and tests with care (for example, voltage probes must only be connected when the line and the power supply voltages have been removed).

Figure 3: e-STARTER connections

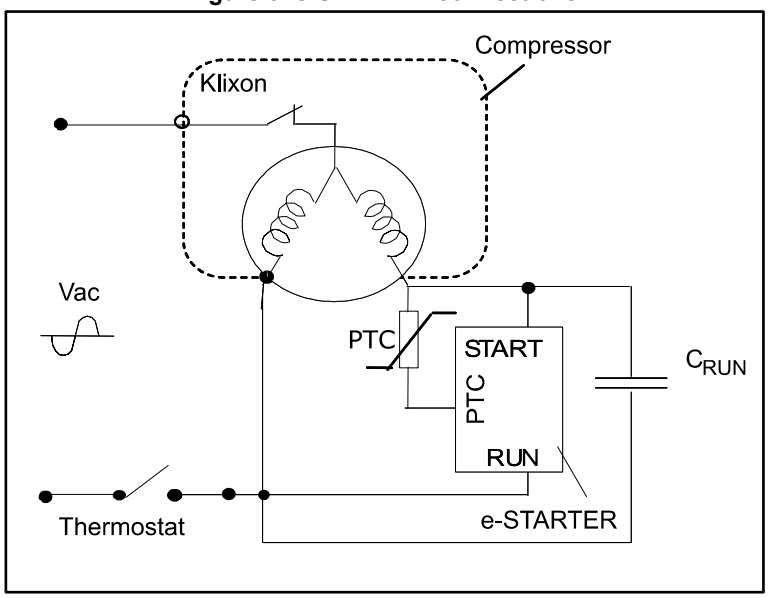

2 Operating principle

2.1 Compressor starter application

The auxiliary winding used by single-phase induction motors allows a higher torque to be applied during the startup phase. The most widespread method to control the start winding is to add a positive temperature coefficient (PTC) resistor in series and a thermostat (see *Figure 4: "Compressor starter application"*).

When the thermostat is closed, the current flows through the start winding and begins heating the PTC. After few hundreds of milliseconds, the PTC value rapidly increases from a few Ohms to several tens of kilohms. This results in reducing the start winding current to few tens of mA, and thus considered open. The PTC behaves like a switch in the OFF state, but with a high leakage current, resulting in high power losses (approx. 2.5 W).

The following figure shows this typical application schematic where a run or a start capacitor can be connected in parallel (see point 1) or in series (see point 2) to the PTC.

Figure 4: Compressor starter application

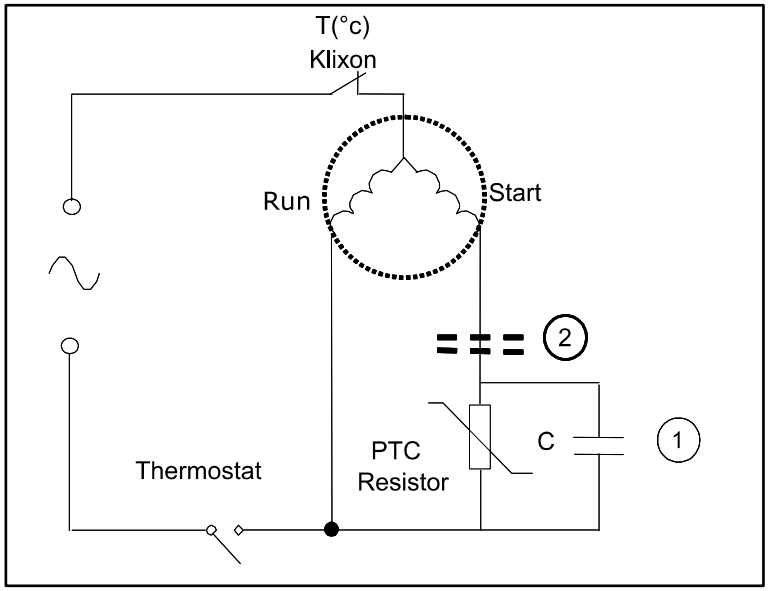

2.2 Standard PTC behavior

The transition between PTC ON and OFF states causes a voltage increase across this variable resistor. *Figure 5: "PTC operation, no RUN cap. (compressor OFF time less than 10 min, mains: 198 V RMS)"* and *Figure 6: "PTC operation with RUN cap. (compressor OFF time less than 1 min, mains: 264 V RMS)"* show PTC oscillograms in two different operating conditions, for a 230 V compressor which can use start and run capacitors.

At the end of PTC conduction, the voltage across it reaches approximately 250 V (V_{PTC_OFF}). This voltage level is stable, regardless of the operating conditions (min or max RMS line voltage, with or without run capacitor, etc.). The PTC can be turned off as soon as this level is reached (refer to for details on the electronic solution implementation to achieve this function).

Figure 5: PTC operation, no RUN cap. (compressor OFF time less than 10 min, mains: 198 V RMS)

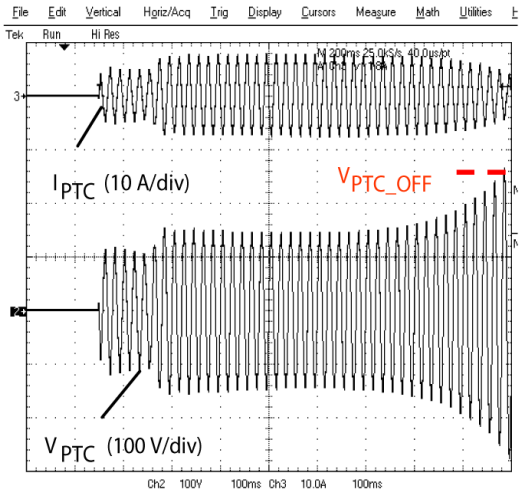

Figure 6: PTC operation with RUN cap. (compressor OFF time less than 1 min, mains: 264 V RMS)

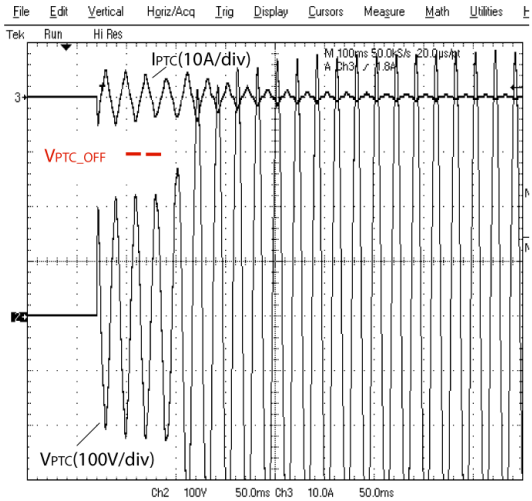

2.3 ON state

When the mains voltage is applied:

- M1 is OFF as the voltage across the PTC is not high enough to reach the DZ1 clamping level
- T2 is turned ON by the gate current provided by R2
- T1 is turned ON by the gate current provided by T2

At each zero-current crossing point, the ACST6 turns off. The voltage across T1/T2 triggers back T1 which results in voltage spikes at each zero-current crossing point (typically around 40 V as shown in *Figure 7: "Voltage spikes at zero current"* for a 230 V compressor).

Applying the click test of norm EN55014, the noise duration could last more than 200 ms (depending on the type of compressor and PTC). The individual spikes last few hundreds of microseconds and are spaced at intervals of 10 ms, so the limits of continuous disturbance are applicable. Since the spike peaks are less than 100 V, the e-STARTER solution fulfills the EN55014 requirements.

Test results greatly depend on the kind of compressor used.

Figure 7: Voltage spikes at zero current

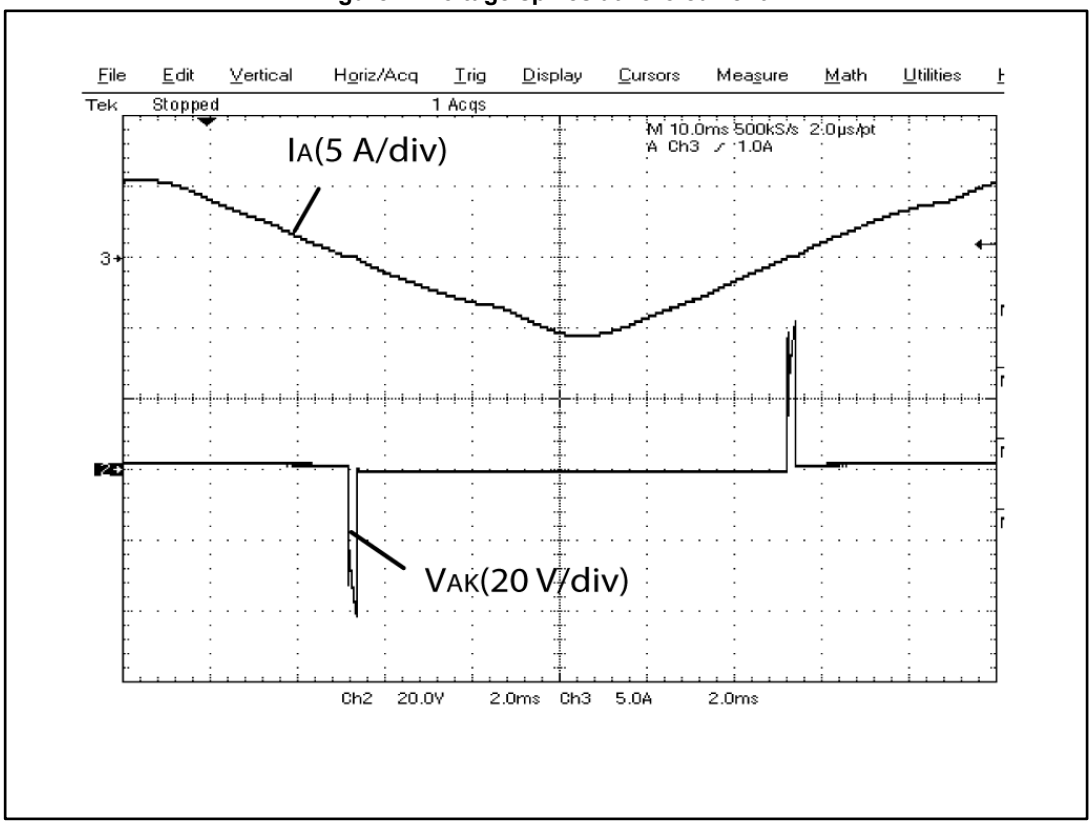

When the PTC conduction time has been sufficient to start the compressor, its voltage suddenly rises, sensed by the R3/R4 divisor bridge.

If the level is higher than the DZ1 clamping level, the thyristor (Q1 and Q2) is latched. M1 is then turned ON: as there is no more gate current to trigger T2, T1 stays OFF and the PTC is also turned OFF.

No more current circulates through the PTC, thus no power is dissipated.

Figure 8: "PTC turnoff" shows this circuit typical behavior. C1 voltage gives an image of the PTC voltage. When its value reaches the DZ1 clamping level (15 V), the MOS gate is latched to 15 V. The PTC is then turned OFF.

Figure 8: PTC turnoff

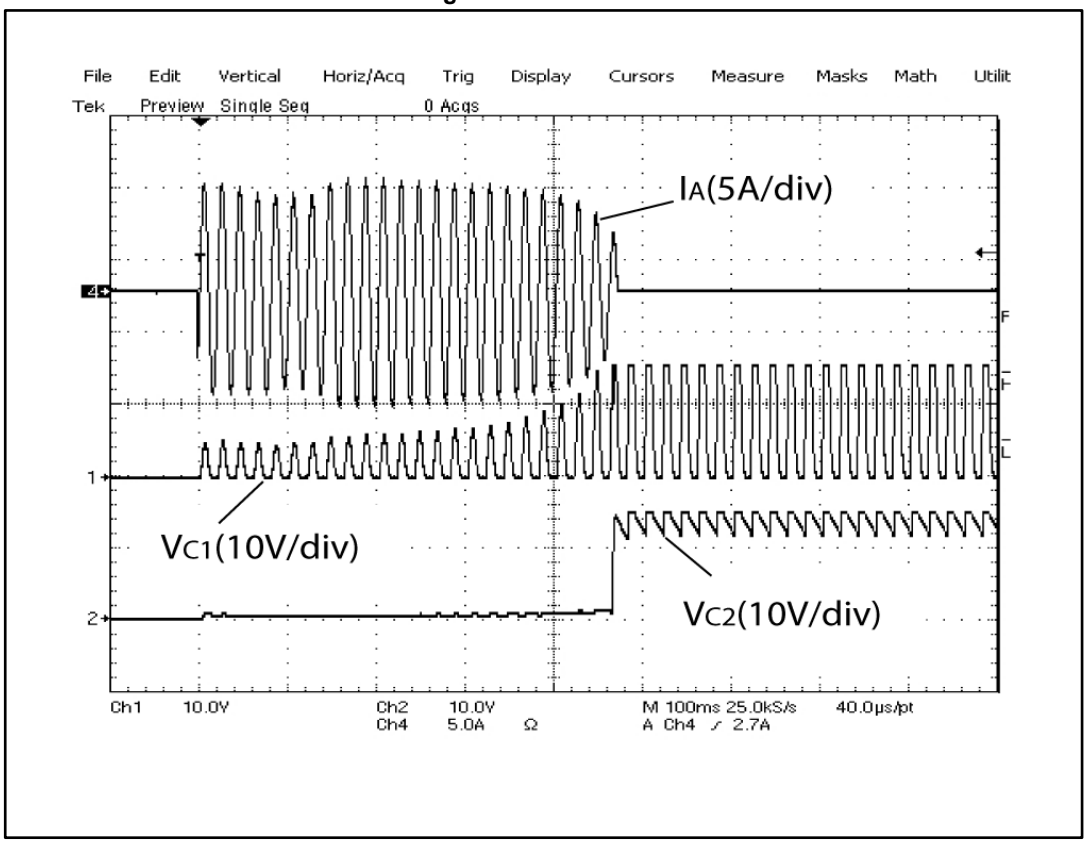

3 Board performance

3.1 Maximum current

During e-STARTER conduction, the power losses are similar to those of the standard PTC solution as the same current circulates through the resistor; the only difference is that a small part of the voltage is also held by T1.

When using an ACST6, its forward voltage drop can be considered constant, V_{t0}, of at worst 0.9 V and a dynamic resistance, R_d, of at worst 80 mΩ. So even with a 10 A peak current, the voltage drop is less than 1 V.

The forward voltage drop should be taken into account mainly to evaluate the semiconductor switch junction temperature elevation.

For an ACST610-8T in TO220AB package, without any heatsink, the junction temperature elevation is equal to:

- 30 °C after a 5 A RMS current in 3 s (worst case for typical 100 V/60 Hz compressors)
- 50 °C after an 11 A RMS current in 0.5 s (worst case for typical 230 V/50 Hz compressors)

This ensures that T_J remains below its maximum allowed temperature (125 °C), even with a 75 °C initial temperature.

Figure 9: "e-STARTER maximum current versus conduction time" shows the maximum repetitive RMS current that the ACST6-7ST can withstand without any heatsink. This curve is given for 40 °C and 75°C ambient temperatures.

The PTC heating time is not long enough to warm the electronic devices, so the 40 °C curve is closer to the e-STARTER real operating conditions.

Figure 9: e-STARTER maximum current versus conduction time

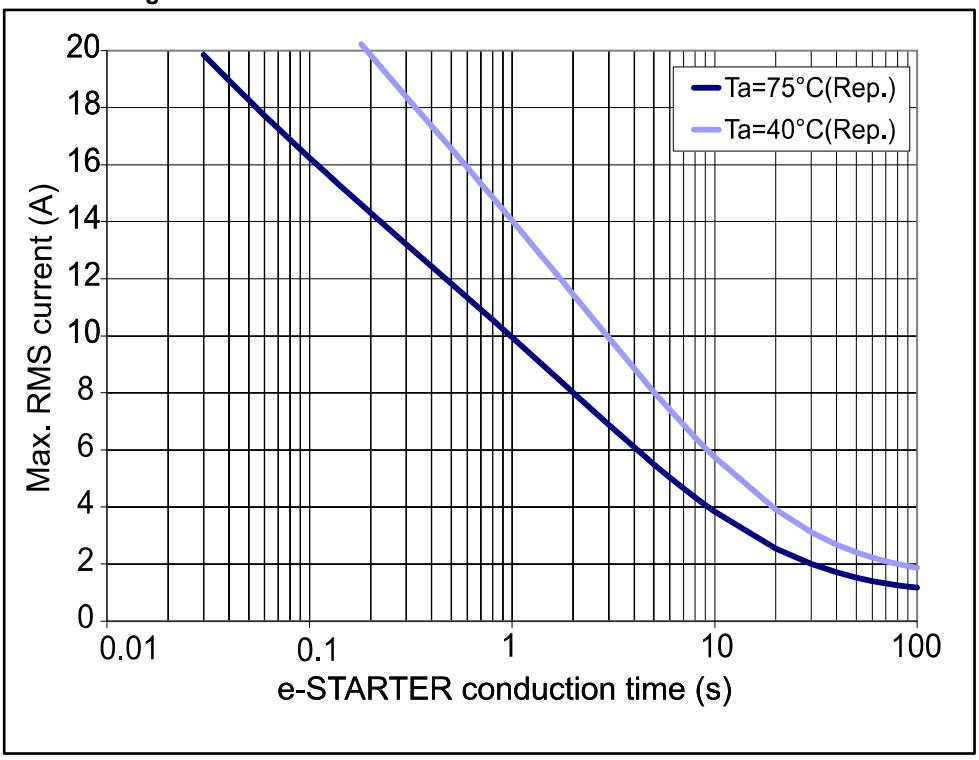

3.2 Standby power losses

When the e-STARTER is in standby, the losses are caused only by the resistors, still connected to the mains voltage. The ACST leakage current is much lower than 20 µA so the resulting losses can be neglected.

The resistors which mainly dissipate power in standby are:

- R2 - used to provide gate current to T2 during the e-STARTER ON state
- R3 - used to sense the voltage level across the PTC

As R2 is connected just behind the diode bridges, the V_{AK} voltage is applied across it, in full-wave mode. R3 senses only half the voltage across PTC and T1. This voltage is also equal to V_{AK} as T1 is OFF and no current is circulating through the PTC.

M1 and C1 voltage drops are minimal (lower than 0.6 V and 16 V respectively). The power losses, dissipated by the two resistors, are given by the following equation:

Equation 4

$$\begin{cases} P_{R2} = \dfrac{V_{AK}^2}{R2} \\ P_{R3} = \dfrac{1}{2} \cdot \dfrac{V_{AK}^2}{R3} \end{cases}$$

With R2 = 470 kΩ and R3 = 510 kΩ:

- for a 230 V / 50 Hz application using a run capacitor, V_{AK} can reach up to 350 V RMS. The overall power losses are equal to 380 mW;
- for a 100 V / 60 Hz application with or without a run capacitor, V_{AK} stays around the line voltage (at worst 115 V RMS). The overall power losses are equal to 41 mW.

3.3 Fast transient voltages

Immunity tests, as required by the IEC 61000-4-4 standard, have been performed using a compressor without a RUN or START capacitor. e-STARTER spurious triggering has not been detected with spikes up to 2 kV.

This high immunity level has been reached thanks to:

- the ACST6 high dV/dt capability
- the SCR X0202N (Igt < 200 µA) improved dV/dt capability, due to the gate short-circuited to the cathode via M1 in OFF state, as well as the R6-C4 snubber circuit
- the R_{GK} (R7) resistor added to the ACST6 device to derive the current provided by R2 when M1 is ON
- the immunity provided by the printed circuit board layout (refer to *Figure 15: "e-STARTER copper side (bottom view, dimensions in cm)"*)

e-STARTER spurious triggering is not visible to the end user and does not lead to any component failure.

3.4 Surge voltages

The ACST6 device is an overvoltage protected device that can be used without any varistor in parallel with its terminals. If a high energy surge is applied to the mains, as described in the IEC 61000-4-5 standard, when the e-STARTER is OFF, two cases can occur:

- if a no-run capacitor is connected to the e-STARTER, the surge voltage is entirely held by the ACST6. If the energy is high enough, the device leakage current can exceed its break-over level, turning the e-STARTER ON for 10 ms at worst (*Figure 10: "Spurious e-STARTER triggering with a 2 kV surge (230 V compressor)"*);
- if a run capacitor is used, the surge energy is absorbed by it. The voltage level is then limited to below 1 kV, which is the ACST6 typical clamping level. No spurious turn-on occurs in this case (*Figure 11: "e-STARTER voltage limited to 648 V thanks to the RUN capacitor (2 kV IEC61000-4-5 surge)"*).

In case of spurious triggering in break-over mode, the ACST6 current is limited by the START winding inductance. The current value is typically 2 A. This is far below the level guaranteed by ACST6, where a 18 Ω load can be used in such operation mode (refer to the ACST6 datasheet). With a 2 kV surge, the peak current then is equal to 110 A.

Figure 10: Spurious e-STARTER triggering with a 2 kV surge (230 V compressor)

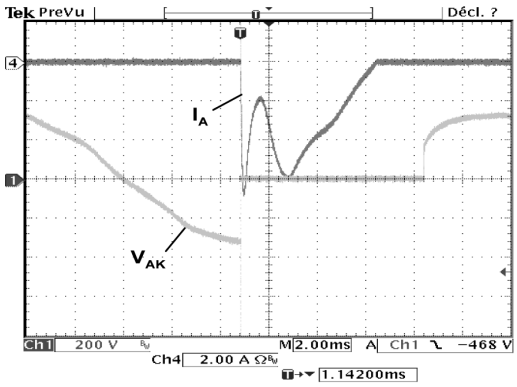

Figure 11: e-STARTER voltage limited to 648 V thanks to the RUN capacitor (2 kV IEC61000-4-5 surge)

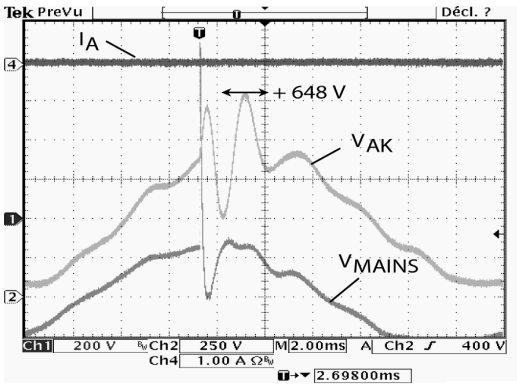

3.5 Reliability and safety

Reliability tests have been performed with ACST6-7ST samples submitted to a current shape equivalent to an inrush current of 11 A RMS in 0.5 s. No parameter evolution of these samples has been detected after 450,000 cycles (a refrigerator lifetime).

Concerning safety, the EN60335-1 standard imposes the consideration of short-circuit or diode-mode failures of all silicon power switches involved in safety features. The failure of an entire e-STARTER cannot lead to safety issues (electrical or mechanical shock, fire). If the e-STARTER power switch dies in short-circuit or diode-mode, the start winding current is protected, limited by the PTC, and the compressor still works. The only drawback is that the standby losses increase to 2.5 W.

If a failure occurs on the control side, leading to a short-circuit of both power switch and PTC, the start winding could be damaged as its current would not be limited. The solution is to use a thin copper track (*Figure 15: "e-STARTER copper side (bottom view, dimensions in cm)"*) between the start winding terminal and the e-STARTER control circuit. For example, a 130 µm track conducts the 1 mA peak current in normal operation but blows if the whole start winding current, at least equal to 5 A RMS, circulates through it. The ACST6 then remains ON as long as the thermostat switch is closed. The behavior is the same of a standard PTC, without the e-STARTER power saving function.

4 Schematic diagram

Figure 12: "STEVAL-IHT003V2 circuit schematic" shows the e-STARTER typical schematic for a 230 V application.

The evaluation board also features some optional pads to add a snubber (components R6 and C4) as shown in *Section 5: "Component layout and printed circuit board"* and *Section 6: "Bill of materials"*.

The traditional PTC resistor has to be connected between the "START" and the "PTC" solder pads (refer also to *Section 1.2: "Connections"*).

The C3 capacitor is not soldered on the breadboards but can be added to evaluate its impact on board immunity.

Figure 12: STEVAL-IHT003V2 circuit schematic

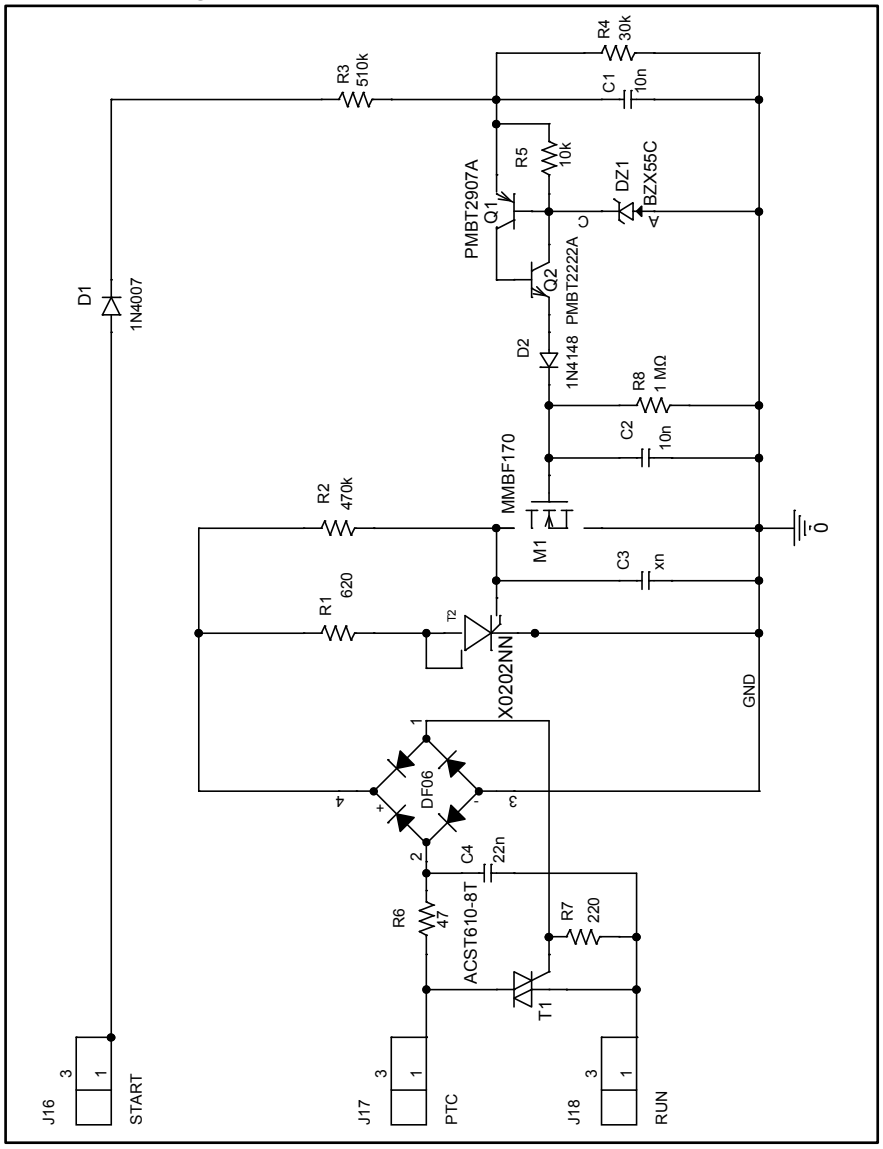

5 Component layout and printed circuit board

Figure 13: e-STARTER topside silk screen

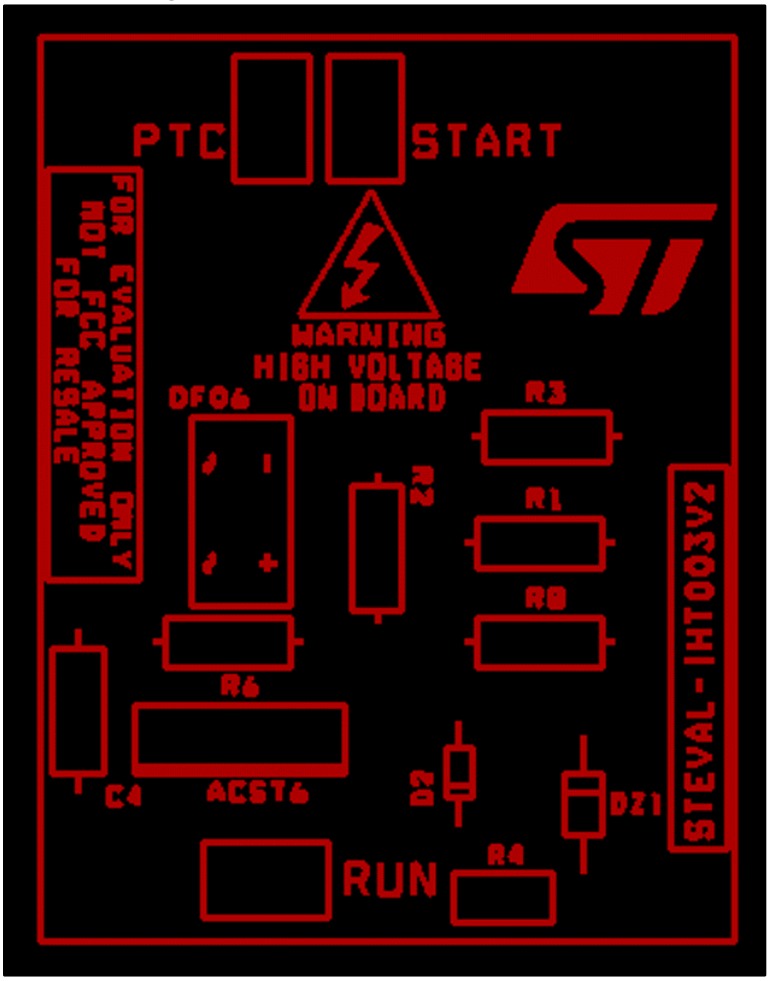

Figure 14: e-STARTER SMD component layout (bottom view)

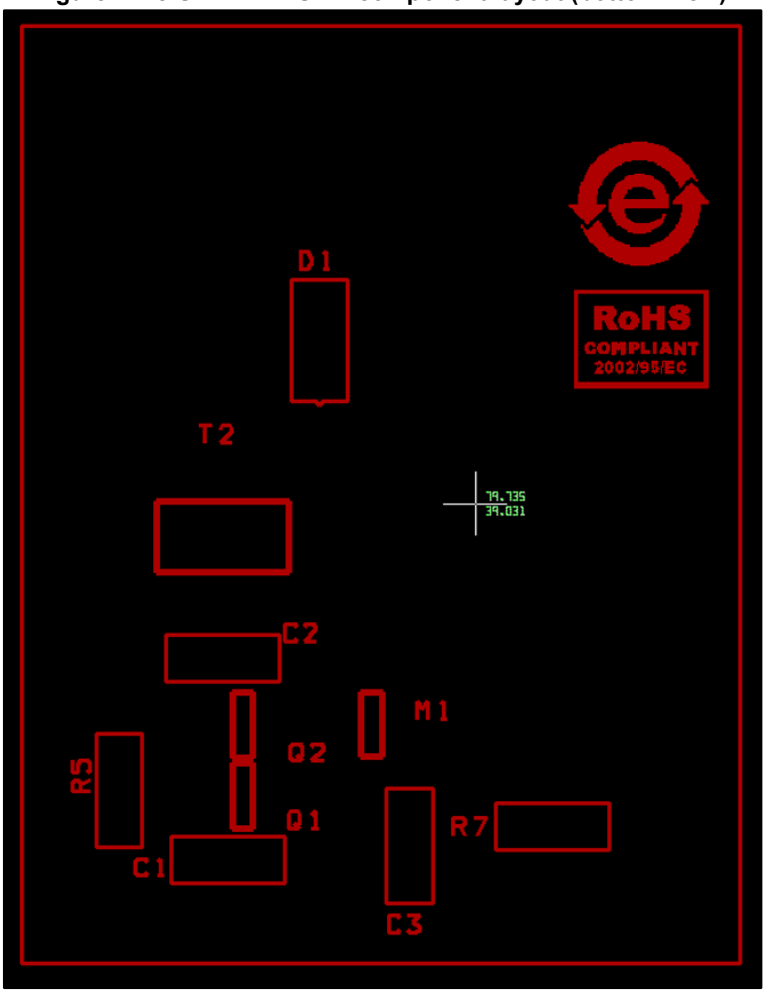

Figure 15: e-STARTER copper side (bottom view, dimensions in cm)

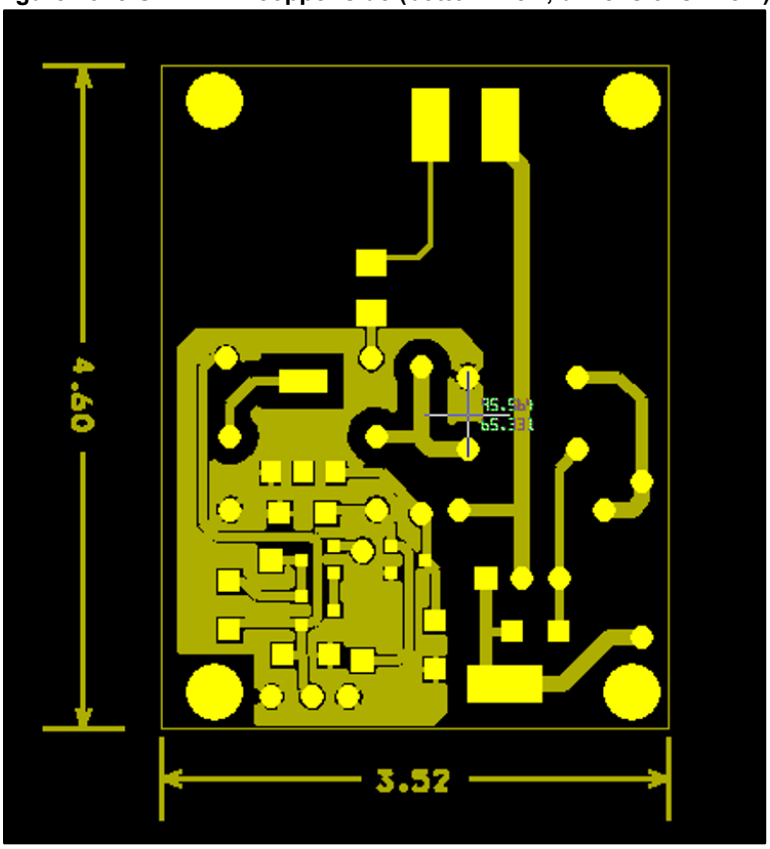

6 Bill of materials

Table 1: STEVAL-IHT003V2 bill of materials

Item	Q.ty	Reference	Part / Value	Description	Manufacturer	Order code
1	1	T1	800 V / 6 A	Triac	STMicroelectronics	ACST610-8T
2	1	T2	800 V / 1.25 A	SCR	STMicroelectronics	X0202NN 5BA4
3	1	Q1	60 V / 0.6 A	PNP Transistor	NXP	PMBT2907A
			60 V / 3A		STMicroelectronics	Alternative part, different package, 2STF2360
4	1	Q2	NPN Transis tor	NPN Transistor	NXP	PMBT2222A
					STMicroelectronics	Alternative part, different package, 2STF1360
5	1	M1	60 V / 0.5 A	N-channel Transistor	Fairchild	MMBF170
			60 V / 8A/ 0.023 Ohm		STMicroelectronics	Alternative part, different package, STL8N6F7
6	1	R1	620 Ω, 1/4 W ±1%	Resistor	MULTICOMP	MF25 620R
7	1	R2	470 kΩ, 1/4 W ±1%	Resistor	MULTICOMP	MF25 470K
8	1	R3	510 kΩ, 1/4 W ±1%	Resistor	MULTICOMP	MF25 510K
9	1	R4	30 kΩ, 1/4 W ±1%	Resistor	MULTICOMP	MF25 30K
10	1	R5	10 kΩ, 1/4 W ±1%	Resistor	MULTICOMP	MCWR12X1002FTL
11	1	R6	47 Ω, 1/4 W ±1%	Resistor	MULTICOMP	MF25 47R
12	1	R7	220 Ω, 1/4 W ±1%	Resistor	MULTICOMP	MCWR12X2200FTL
13	1	R8	1 MΩ, 1/4 W ±1%	Resistor	MULTICOMP	MF25 1M

Item	Q.ty	Reference	Part / Value	Description	Manufacturer	Order code
14	1	C1	10 nF, 50 V ±10%	Ceramic Capacitor	MULTICOMP	MC1206B103K500CT
15	1	C2	10 nF, 50 V ±10%	Ceramic Capacitor	MULTICOMP	MC1206B103K500CT
16	1	C3	DNM	Ceramic Capacitor		
17	1	C4	22 nF, 250 Vac ±10%	Ceramic Capacitor	WIMA	MKS4F022203C00KSSD
18	1	DF06	1 A / 600 V	Single phase bridge rectifier	NTE	NTE5332
19	1	D1	1 A / 1000 V	Rectifier Diode	FAIRCHILD	S1M
			1A / 1000 V		STMicroelectronics	Alternative part, STTH110A
20	1	D2	0.15 A / 100 V	Signal Diode	MULTICOMP	1N4148
21	1	DZ1	15 V / 0.5 W ±5%	Zener Diode	VISHAY	BZX55C15

7 Conclusions

The STEVAL-IHT003V2 evaluation board promotes an ST full silicon kit for thermostat applications and allows:

- checking the immunity of our solution;
- easily checking the efficiency gains;
- adapting the hardware for dedicated compressors and PTCs.

The e-STARTER allows upgrading the efficiency class of refrigerators or freezers with a very low cost solution, which decreases standby losses from 2.5 W typ. to 380 or 40 mW (respectively for 230 V and 100 V applications).

8 Revision history

Table 2: Document revision history

Date	Revision	Changes
09-Feb-2017	1	Initial release

IMPORTANT NOTICE – PLEASE READ CAREFULLY

STMicroelectronics NV and its subsidiaries (“ST”) reserve the right to make changes, corrections, enhancements, modifications, and improvements to ST products and/or to this document at any time without notice. Purchasers should obtain the latest relevant information on ST products before placing orders. ST products are sold pursuant to ST’s terms and conditions of sale in place at the time of order acknowledgement.

Purchasers are solely responsible for the choice, selection, and use of ST products and ST assumes no liability for application assistance or the design of Purchasers’ products.

No license, express or implied, to any intellectual property right is granted by ST herein.

Resale of ST products with provisions different from the information set forth herein shall void any warranty granted by ST for such product.

ST and the ST logo are trademarks of ST. All other product or service names are the property of their respective owners.

Information in this document supersedes and replaces information previously supplied in any prior versions of this document.

© 2017 STMicroelectronics – All rights reserved