UM2638

User manual

Getting started with the X-NUCLEO-S2868A2 Sub-1 GHz 868 MHz RF expansion board based on S2-LP radio for STM32 Nucleo

Introduction

The X-NUCLEO-S2868A2 expansion board is based on the S2-LP ultra-low power RF transceiver and operates in the 868 MHz ISM frequency band.

The X-NUCLEO-S2868A2 interfaces with the STM32 Nucleo microcontroller via SPI connections and GPIO pins. You can change some of the GPIOs by mounting or removing the resistors.

The expansion board is compatible with ST morpho and Arduino UNO R3 connectors.

Figure 1. X-NUCLEO-S2868A2 expansion board

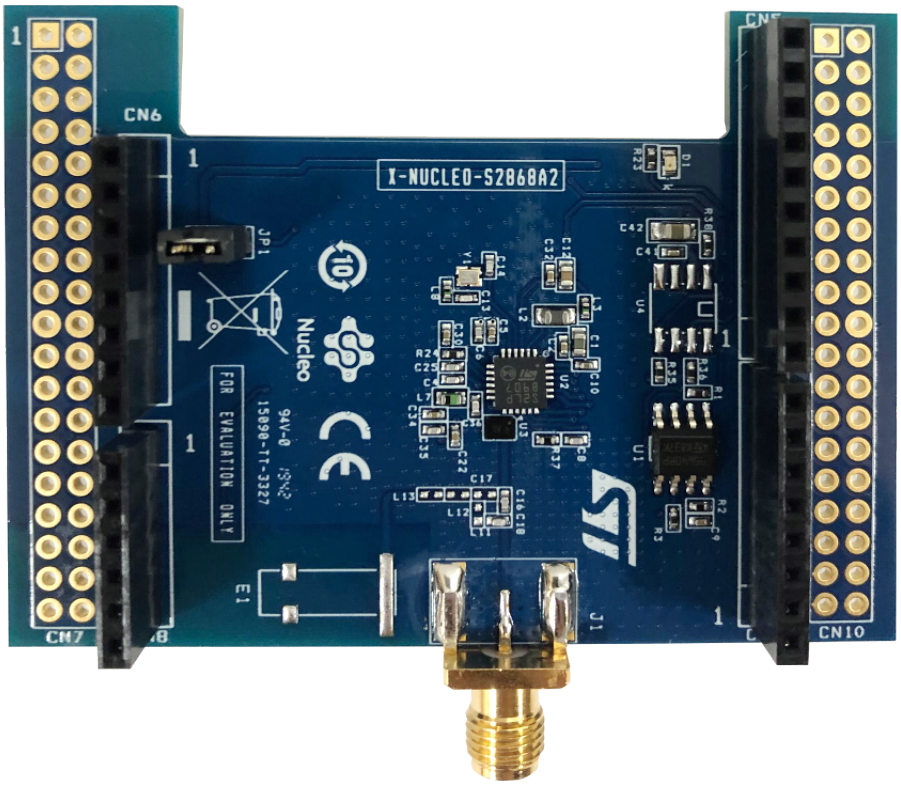

1 Acronyms and abbreviations

Table 1. List of acronyms

Acronym	Description
AMR	Automatic meter reading
EEPROM	Electrically erasable programmable read only memory
GHz	Giga Hertz
GUI	Graphical user interface
LED	Light emitting diode
MCU	Microcontroller unit
P2P	Point-to-point communication
RF	Radio frequency communication
SPI	Serial peripheral interface
USB	Universal serial bus
wM-Bus	Wireless metering bus
WSN	Wireless sensors network

2 Getting started

2.1 Overview

The X-NUCLEO-S2868A2 main features are:

- Based on S2-LP radio
- S2-LP narrow band ultra-low power sub-1 GHz transceiver tuned for 860 - 940 MHz frequency band
- Programmable RF output power up to +16 dBm
- Modulation schemes: 2-FSK, 2-GFSK, 4-FSK, 4-GFSK, OOK and ASK
- Air data rate from 0.1 to 500 kbps
- Ultra-low power consumption: 7 mA RX and 10 mA TX at +10 dBm
- IEEE 802.15.4g hardware packet support with whitening, FEC, CRC and dual SYNC word detection
- RX and TX 128 byte FIFO buffers
- Support to wireless M-Bus
- Excellent performance of receiver sensitivity (up to -130 dBm)
- Automatic acknowledgement, retransmission and timeout protocol engine
- Compatible with STM32 Nucleo boards
- Compatible with Arduino UNO R3 connectors
- BALF-SPI2-01D3 IPD balun for matching network and harmonics filter
- Sigfox compatible
- Sample firmware for P2P communication
- 6LoWPAN compatible thanks to STM32Cube
- RoHS and WEEE compliant

The X-NUCLEO-S2868A2 expansion board can be used for the evaluation of the S2-LP device in multiple applications:

- wM-Bus applications
- Point-to-point communication protocol
- 6LoWPAN applications
- SigFox communication

You can develop other applications for evaluating the devices, such as:

- SigFox communication
- Automatic meter reading
- Home and building automation
- WSN
- Industrial monitoring and control
- Wireless fire and security alarm systems

2.2 Hardware and software requirements

To use the X-NUCLEO-S2868A2 expansion board with STM32 Nucleo development boards, connect the boards as shown below.

Figure 2. X-NUCLEO-S2868A2 expansion board connected to an STM32 Nucleo development board

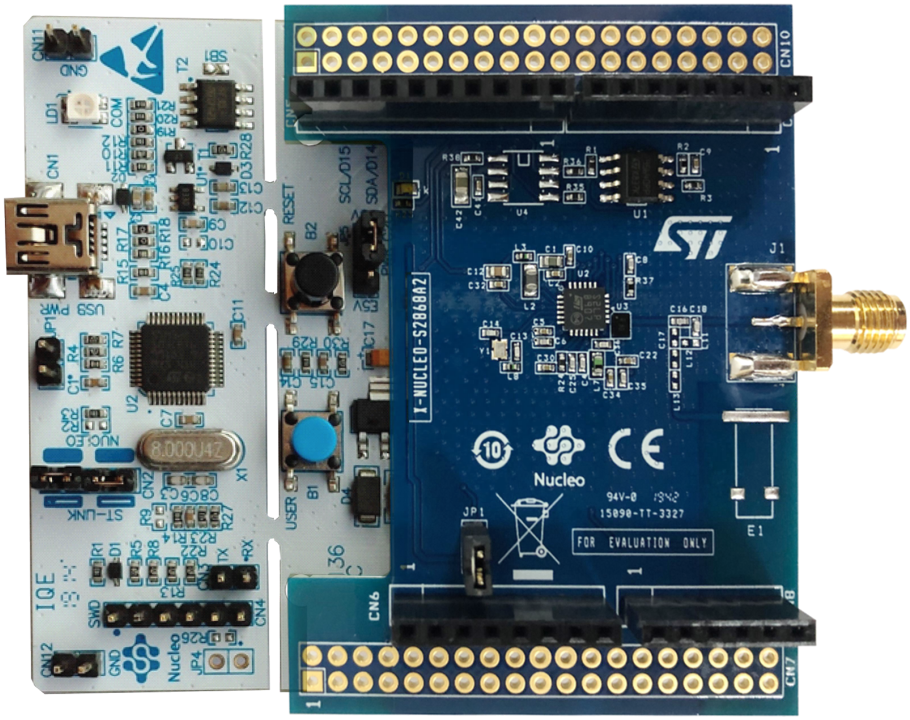

The interconnection between the STM32 Nucleo and the X-NUCLEO-S2868A2 is designed to allow the use of any STM32 Nucleo board, although complete testing has only been performed on the NUCLEO-L053R8, NUCLEO-F401RE and NUCLEO-L152RE boards hosting ultra-low power STM32 microcontrollers.

The minimum hardware and software requirements are listed below:

- a PC/laptop with Microsoft Windows (7 and above) to install the software package (X-CUBE-SUBG1)
- a type A USB to mini-B USB cable to connect the STM32 Nucleo board to the PC/laptop
- 128 MB of RAM
- Approximately 40 MB of hard disk space for the firmware
- Approximately 15 MB of hard disk space for the wM-Bus GUI

The use of the wM-Bus concentrator with the GUI requires additional boards to be connected to the PC. The GUI can be used to check the wM-Bus communication protocol.

2.3 Board setup

Step 1. Check that the jumper on JP1 connector is connected to provide the required voltage to the board devices.

Step 2. Connect the X-NUCLEO-S2868A2 to the STM32 Nucleo board as shown in Figure 2.

Step 3. Power the STM32 Nucleo development board using the Mini-B USB cable.

Step 4. Program the firmware in the STM32 on the STM32 Nucleo development board using the firmware sample provided.

Step 5. Preset the reset button on the STM32 Nucleo development board.

The evaluation kit is ready-to-use.

3 Hardware description and configuration

3.1 Interconnection details

The X-NUCLEO-S2868A2 expansion board and the NUCLEO-F401RE or NUCLEO-L152RE board connection details are listed in the table below.

Table 2. X-NUCLEO-S2868A2 and NUCLEO-L152RE connection details (left connector)

Signal name													
NC	IOREF	RESET	3V3	5V	GND	GND	VIN	A0	A1	A2	A3	A4	A5
Connector name													
CN6 Power								CN8 Analog					
Pin number													
1	2	3	4	5	6	7	8	1	2	3	4	5	6
NUCLEO-L152RE MCU port													
								PA0	PA1	PA4	PB0	PC1	PC0
X-NUCLEO-S2868A2 expansion board signals													
			3V3		GND	GND		GPIO0	CSN	GPIO1	GPIO2	GPIO0(1)	GPIO3

1. *Used to enable different configurations in case a signal conflict occurs when using other expansion board (refer to next section).*

Table 3. X-NUCLEO-S2868A2 and NUCLEO-L152RE connection details (right connector)

Signal name																	
D15	D14	AREF	GND	D13	D12	D11	D10	D9	D8	D7	D6	D5	D4	D3	D2	D1	D0
Connector name																	
CN5 Digital										CN9 Digital							
Pin number																	
10	9	8	7	6	5	4	3	2	1	8	7	6	5	4	3	2	1
NUCLEO-L152RE MCU port																	
PB8	PB9			PA5	PA6	PA7	PB6	PC7	PA9	PA8	PB10	PB4	PB5	PB3	PA10	PA2	PA3
X-NUCLEO-S2868A2 expansion board signals																	
			GND	SPI_CLK(1)	SPI_MISO	SPI_MOSI	SPI_CSN(1)		nS(1)	SDN	SDN(1)	nS		SPI_CLK			

1. *Optional connection*

3.2 SPI and GPIO connection options

The SPI and GPIO connection options between the STM32 Nucleo and S2-LP can be used to enable different configurations in case a signal conflict occurs when using other expansion boards.

Table 4. S2-LP interface (optional) with STM32 Nucleo board

S2-LP signal	Default STM32 port	Optional STM32 port
GPIO0	PA0	PC1 To use the optional connection, mount R18, unmount R12
CSn	PA1	PB6

S2-LP signal	Default STM32 port	Optional STM32 port
		To use the optional connection, mount R9, unmount R13
CLK	PB3	PA5 To use the optional connection, mount R6, unmount R11
nS	PB4	PA9 To use the optional connection, mount R7, unmount R22
SDN	PA8	PB10 To use the optional connection, mount R19, unmount R10

To use the optional connections, modify the firmware on the basis of the STM32 resources used.

3.3 Current measurement

To monitor the X-NUCLEO-S2868A2 expansion board power consumption, use jumper JP1: connect an ammeter probe between the connector pins 1 and 2 for measurements.

3.4 X-NUCLEO-S2868A2 component placement details

The figure below shows the component placement on the X-NUCLEO-S2868A2 expansion board.

Figure 3. X-NUCLEO-S2868A2 on-board device placement

1. Arduino UNO R3 connector
2. Arduino UNO R3 connector
3. S2-LP
4. EEPROM

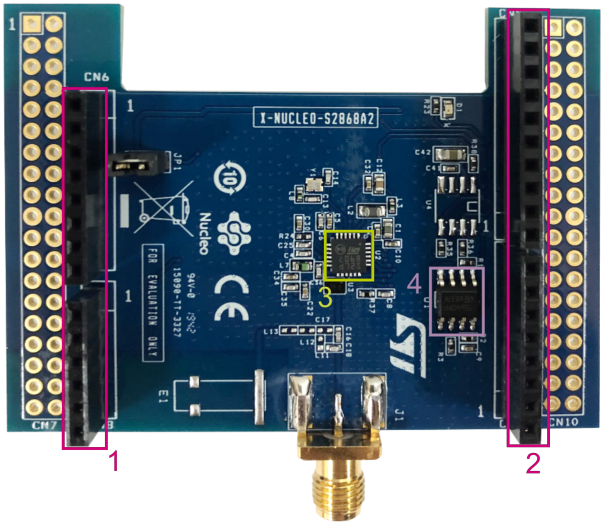

4 X-NUCLEO-S2868A2 on-board device description

4.1 SPI EEPROM

The M95640-R is a 64 Kbit serial SPI bus EEPROM with high-speed clock interface. The device can be used to store the configuration parameters related to S2-LP RF device application or settings.

Features	Description
Order code	M95640-RMC6TG
Package	MLP8
Operating voltage	1.8 to 5.5 V

4.2 S2-LP RF transceiver

The X-NUCLEO-S2868A2 expansion board is based on the S2-LP standalone RF transceiver. It operates in the 868 MHz ISM frequency band and wireless M-Bus.

The S2-LP narrow band ultra-low power sub-1 GHz transceiver is tuned for 430-470 MHz and 860 - 940 MHz frequency bands and programmable RF output power up to +16 dBm.

Table 5. S2-LP details

Features	Description
Order code	S2-LPQTR
Package	QFN24 4x4x1
Operating voltage	1.8 to 3.6 V

5 Schematic diagrams

Figure 4. X-NUCLEO-S2868A2 circuit schematic

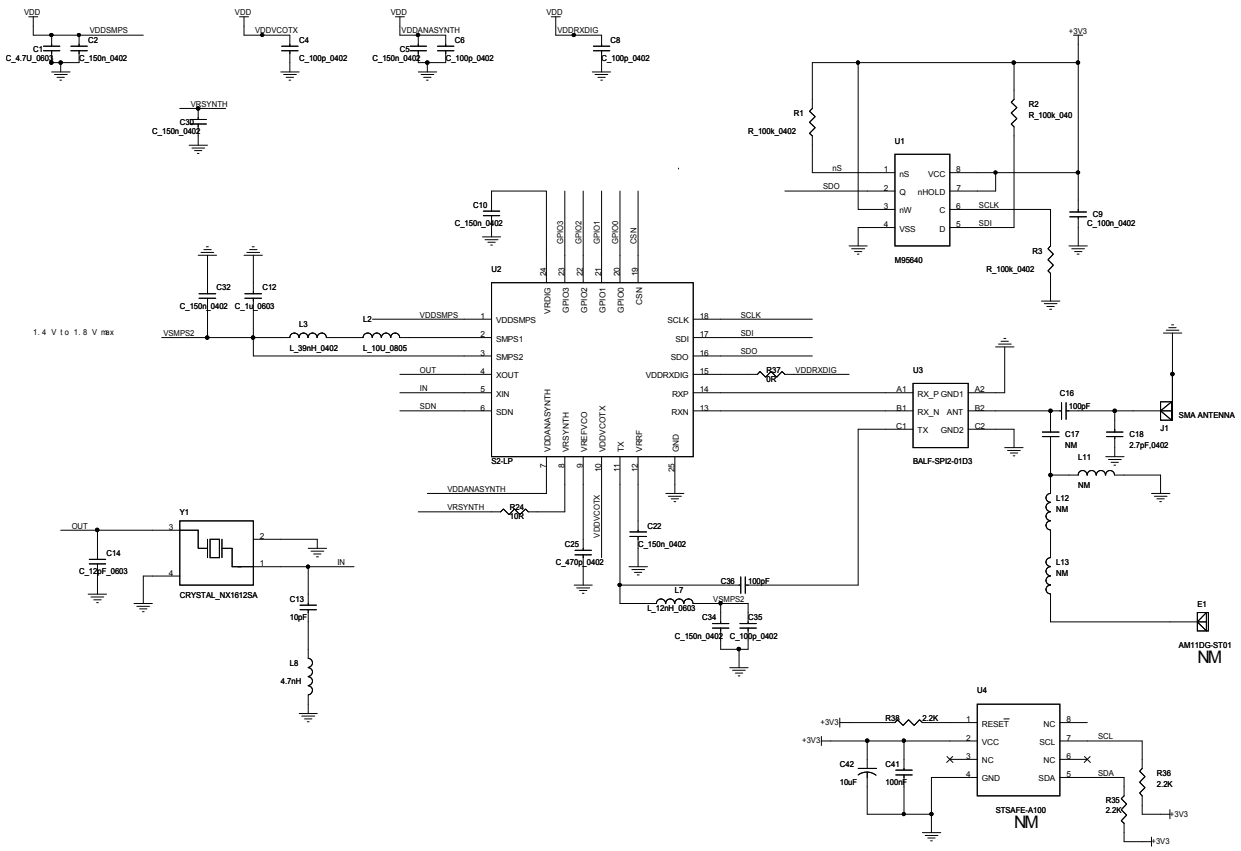

Figure 5. X-NUCLEO-S2868A2 circuit schematic - Arduino connectors

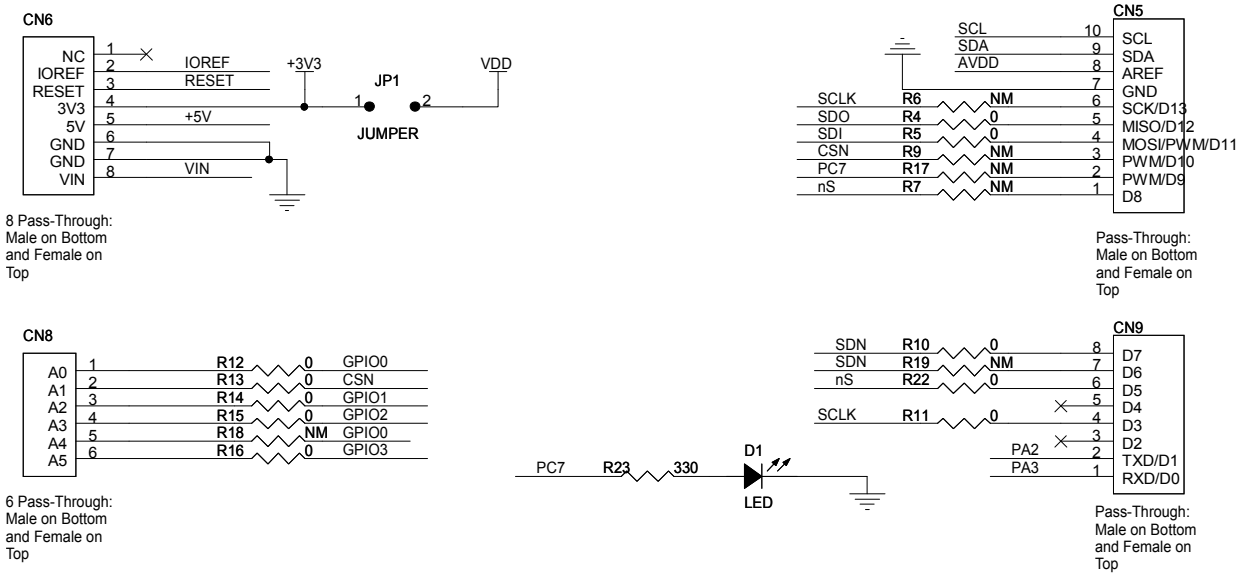

Figure 6. X-NUCLEO-S2868A2 circuit schematic - ST morpho connectors

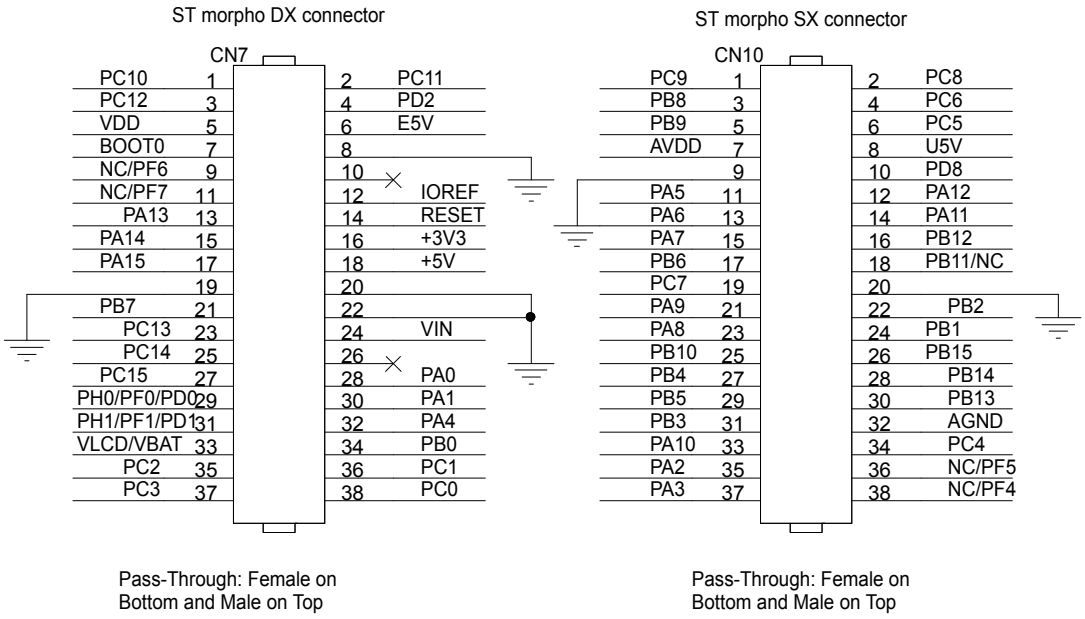

6 Bill of materials

Table 6. **X-NUCLEO-S2868A2 bill of materials**

Item	Q.ty	Ref.	Part/Value	Description	Manufacturer	Order code
1	1	CN5	CON10 550 VAC 2.54 mm pitch	Connector	4UCON	SSQ-110-03-F-S
2	2	CN6, CN9	CON8 550 VAC 2.54 mm pitch	Connectors	4UCON	SSQ-108-03-F-S
3	2	CN7, CN10	Header 19x2 not assembled 2.54 mm pitch	Connectors	4UCON	SSQ-106-03-F-S
4	1	CN8	CON6 550 VAC	Connector		
5	1	C1	4.7 µF 16 V ±10% SMD-0603	VBAT filter capacitors	Murata	CC0603KRX5R7BB475
6	7	C2, C5, C10, C22, C30, C32, C34	150 nF 16 V ±10% SMD-0402	Filter capacitors	Murata	CL05B154KO5NNNC
7	4	C4, C6, C8, C35	100 pF 16 V ±10% SMD-0402	VBAT bypass capacitors	Murata	C0402C101J3GACTU
8	1	C9	100 nF 16 V ±10% SMD-0402	Decoupling capacitor	Murata	GRM155R71C104KA88D
9	1	C12	1 µF 16 V ±10% SMD-0603	SMPS OUT filter capacitor	Murata	EMK107BJ105KA-T
10	1	C13	10 pF 50 V_{DC} ±5% SMD-0402	Capacitor	KEMET	C0402C100J5GACAUTO7411 or equivalent
11	1	C14	12 pF 50 V ±5% SMD-0402	Capacitor	Yageo	CC0402JRNPO9BN120 or equivalent
12	2	C16, C36	100 pF 16V ±5% SMD-0402		KEMET	C0402C101J3GACTU
13	1	C17	100 pF 16V ±5% SMD-0402	not mounted	KEMET	C0402C101J3GACTU
14	1	C25	470 pF 16V ±10% SMD-0402	VREFVCO filter	Murata	UMK105B7471KV
15	1	C41	100 nF 50 V_{DC} ±5% SMD-0402	Capacitor	Murata	GRM155R61H104JE14D or equivalent
16	1	C42	10 µF 16 V ±10% SMD-0805	Capacitor	YAGEO	CL21A106KOQNNNG
17	1	D1	LED 20 mA SMD-0603	Red LED	OSRAM	LS Q976-NR-1
18	1	JP1	VH/T M2OE/ W.325/10/ MOD	Jumper	Any	Any
19	1	J1	RF_IN/OUT, jack assembly	SMA antenna	Emerson	142-0701-881
20	1	L2	10 µH 250 mA SMD-0805	SMPS out inductor	Murata	LQM21FN100M70L
21	1	L7	12 nH 600 mA ±2% SMD-0603	Wire-wound	Murata	LQW18AN12NJ00D

Item	Q.ty	Ref.	Part/Value	Description	Manufacturer	Order code
22	1	L8	4.7 nH 220 mA SMD-0402	Inductor	Johanson Technology Inc.	L-07C4N7SV6T
23	1	L11	8.2 nH 550 mA SMD-0402	not mounted	Murata	LQG15HS8N2J02D
24	2	L12, L13	27 nH 300 mA SMD-0402	not mounted	Taiyo Yuden	HK100527NJ-T
25	3	R1, R2, R3	100 k 1/16 W ±10% SMD-0402	Resistors	Tyco Electronics	CRG0402F100K
26	10	R4, R5, R10, R11, R12, R13, R14, R15, R16, R22	1/16 W ±1% SMD-0402	Resistors	Tyco Electronics	CRG0402ZR
27	6	R6, R7, R9, R17, R18, R19		Resistors (not mounted)	Any	Any
28	1	R23	1/10 W ±5% SMD-0402	Resistor	Panasonic	ERJ-2GEJ331X
29	1	R24	10 R 1/16 W ±1% SMD-0402	Resistor	Yageo	RC0402FR-0710RL
30	1	R37	0 R 1/16 W ±1% SMD-0402	Resistor	Tyco Electronics	CRG0402ZR
31	3	R35, R36, R38	2.2 K 1/16 W ±1% SMD-0402	Resistors	Yageo	RC0402FR-072K2L
32	1	TP1		Test point	Any	Any
33	1	U1	M95640 8-SOIC	64 Kbit SPI bus EEPROM with high-speed clock	ST	M95640-RMN6TP
34	1	U2	S2-LP QFN-24L	Ultra-low power, high performance, sub-1 GHz transceiver	ST	S2-LPQTR
35	1	U3	Chip scale package 0.4 mm pitch	50 Ω nominal input / conjugate match balun to S2-LP, 868 - 927 MHz with integrated harmonics filter	ST	BALF-SPI2-01D3
36	1	U4	STSAFE-A100 SO8N	Authentication and brand protection secure solution (not mounted)	ST	STSAFE-A100
37	1	Y1	50 MHz EXS00ACS084 03	Crystal	NDK	NX1612SA
38			1/4 wave stubby	868-915 MHz flexible whip antenna	LPRS	ANT-900MS/ ANT-900MR
39	1	L3	39 nH 300 mA ±5% SMD_0402	Unshielded multilayer inductor	Murata	LQG15HS39NJ02D
40	1	C18	2.7 pF 100 V 0.25 pF SMD_0402	Shunt	Murata	GRM1555C2A2R7CA01D

7 Formal notices required by the U.S. Federal Communications Commission ("FCC")

FCC NOTICE: This device complies with part 15 of the FCC Rules. Operation is subject to the following two conditions: (1) This device may cause harmful interference, and (2) this device must accept any interference received, including interference that may cause undesired operation.

Changes or modifications not expressly approved by the manufacturer could void the user’s authority to operate the equipment.

Additional warnings for FCC

This equipment has been tested and found to comply with the limits for a Class B digital device, pursuant to part 15 of the FCC Rules. These limits are designed to provide reasonable protection against harmful interference in a residential installation. This equipment generates, uses and can radiate radio frequency energy and, if not installed and used in accordance with the instructions, may cause harmful interference to radio communications. However, there is no guarantee that interference will not occur in a particular installation. If this equipment does cause harmful interference to radio or television reception, which can be determined by turning the equipment off and on, the user is encouraged to try to correct the interference's by one or more of the following measures:

- Reorient or relocate the receiving antenna.
- Increase the separation between the equipment and the receiver.
- Connect the equipment into an outlet on a circuit different from that to which the receiver is connected.
- Consult the dealer or an experienced radio/TV technician for help.

8 Formal product notice required by the Industry Canada ("IC")

Innovation, Science and Economic Development Canada Compliance - This device complies with Innovation, Science and Economic Development RSS standards. Operation is subject to the following two conditions: (1) this device may not cause harmful interference, and (2) this device must accept any interference received, including interference that may cause undesired operation. Changes or modifications not expressly approved by the manufacturer could void the user's authority to operate the equipment.

Conformité à Innovation, Sciences et Développement Économique Canada - Cet appareil est conforme aux normes RSS d'Innovation, Science et Développement économique. L'utilisation est soumise aux deux conditions suivantes: (1) cet appareil ne doit pas causer d'interférences nuisibles, et (2) cet appareil doit accepter de recevoir tous les types d'interférence, y comprises les interférences susceptibles d'entraîner un fonctionnement indésirable. Les changements ou les modifications non expressément approuvés par le fabricant pourraient annuler le permis d'utiliser l'équipement.

Revision history

Table 7. **Document revision history**

Date	Revision	Changes
12-Dec-2019	1	Initial release.
20-Dec-2021	2	Updated Section 6 Bill of materials.

Contents

1 Acronyms and abbreviations 2
2 Getting started 3
2.1 Overview 3
2.2 Hardware and software requirements 4
2.3 Board setup 4
3 Hardware description and configuration 5
3.1 Interconnection details 5
3.2 SPI and GPIO connection options 5
3.3 Current measurement 6
3.4 X-NUCLEO-S2868A2 component placement details 6
4 X-NUCLEO-S2868A2 on-board device description 7
4.1 SPI EEPROM 7
4.2 S2-LP RF transceiver 7
5 Schematic diagrams 8
6 Bill of materials 10
7 Formal notices required by the U.S. Federal Communications Commission ("FCC") 12
8 Formal product notice required by the Industry Canada ("IC") 13
Revision history 14
List of tables 16
List of figures 17

List of tables

Table 1. List of acronyms . . . 2
Table 2. X-NUCLEO-S2868A2 and NUCLEO-L152RE connection details (left connector) . . . 5
Table 3. X-NUCLEO-S2868A2 and NUCLEO-L152RE connection details (right connector) . . . 5
Table 4. S2-LP interface (optional) with STM32 Nucleo board . . . 5
Table 5. S2-LP details. . . . 7
Table 6. X-NUCLEO-S2868A2 bill of materials . . . 10
Table 7. Document revision history . . . 14

List of figures

Figure 1. X-NUCLEO-S2868A2 expansion board . . . 1
Figure 2. X-NUCLEO-S2868A2 expansion board connected to an STM32 Nucleo development board . . . 4
Figure 3. X-NUCLEO-S2868A2 on-board device placement . . . 6
Figure 4. X-NUCLEO-S2868A2 circuit schematic . . . 8
Figure 5. X-NUCLEO-S2868A2 circuit schematic - Arduino connectors . . . 8
Figure 6. X-NUCLEO-S2868A2 circuit schematic - ST morpho connectors . . . 9

IMPORTANT NOTICE – PLEASE READ CAREFULLY

STMicroelectronics NV and its subsidiaries (“ST”) reserve the right to make changes, corrections, enhancements, modifications, and improvements to ST products and/or to this document at any time without notice. Purchasers should obtain the latest relevant information on ST products before placing orders. ST products are sold pursuant to ST’s terms and conditions of sale in place at the time of order acknowledgement.

Purchasers are solely responsible for the choice, selection, and use of ST products and ST assumes no liability for application assistance or the design of Purchasers’ products.

No license, express or implied, to any intellectual property right is granted by ST herein.

Resale of ST products with provisions different from the information set forth herein shall void any warranty granted by ST for such product.

ST and the ST logo are trademarks of ST. For additional information about ST trademarks, please refer to www.st.com/trademarks. All other product or service names are the property of their respective owners.

Information in this document supersedes and replaces information previously supplied in any prior versions of this document.

© 2021 STMicroelectronics – All rights reserved