UM3237

User manual

Getting started with X-STM32MP-GNSS1 expansion board

Introduction

The X-STM32MP-GNSS1 expansion board for the global navigation satellite system (GNSS) receiver which embeds the following devices:

- The Teseo-LIV3FL module for Low power GNSS positioning along with sensor for position accuracy.
- The ISM330DHCX iNEMO 3-axis accelerometer and 3-axis gyroscope
- The IIS2MDC 3-axis magnetometer
- The ILPS22QS pressure sensor
- The external LNA and SAW filter
- The external antenna amplifies any weak signals to improve the quality of data received.
- Switches & LEDs present

The X-STM32MP-GNSS1 interfaces with the STM32MP157F-DK2 board via a 40-pin GPIO connector, using I²C, SPI, and GPIO interfaces.

The X-STM32MP-GNSS1 expansion board is compatible with both the STM32MP157F-DK2 and Raspberry Pi GPIO expansion connector layout.

Figure 1. X-STM32MP-GNSS1 expansion board

1 Overview

The X-STM32MP-GNSS1 is powered via a standard 3.3 V supply through the STM32MP157F-DK2 GPIO connector. The figure below shows the component placement on the board.

Figure 2. X-STM32MP-GNSS1 component placement details

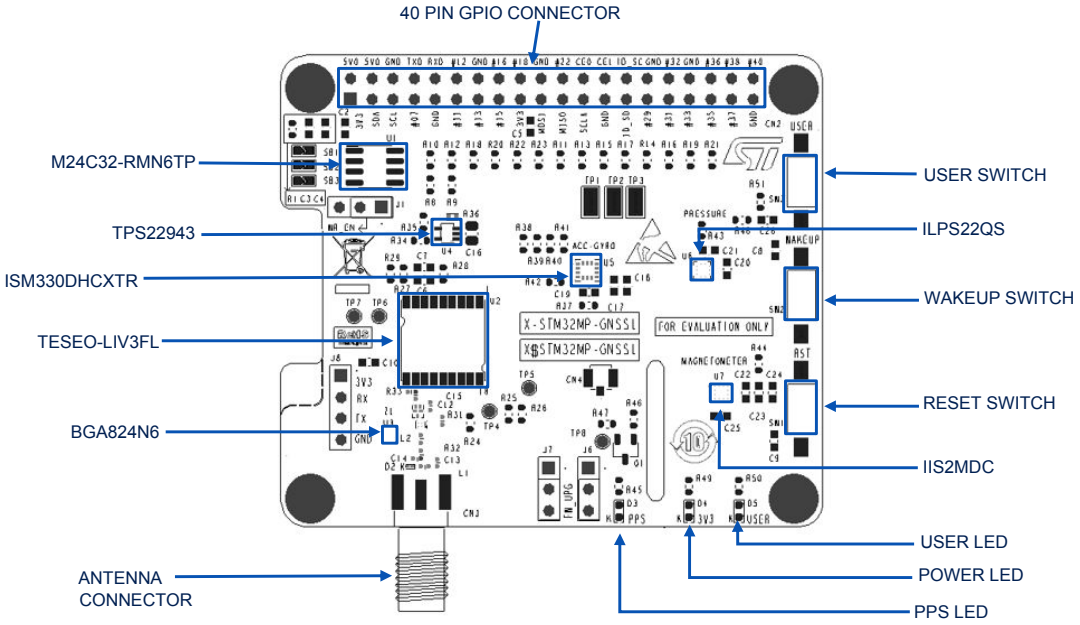

The X-STM32MP-GNSS1 is a 40-pin connector expansion board for STM32MP157F-DK2 Discovery Kit with Teseo-LIV3FL module for GNSS positioning along with sensors for data and positioning accuracy.

For motion detection, the iNEMO inertial module ISM330DHCX is used which is a 3-axis digital accelerometer and a 3-axis digital gyroscope with full-scale acceleration range of ±2/±4/±8/±16 g and an angular rate range of ±125/±250/±500/±1000/±2000/±4000 dps.

It also has Dual full-scale, 1260 hPa and 4060 hPa, absolute digital output barometer with embedded QVAR electrostatic pressure sensor, namely ILPS22QS.

A 3-axis digital output magnetometer with dynamic range up to ±50 gauss for Position accuracy is also present. Additionally, an LNA (Low Noise Amplifier) along with SAW filter on RF path for amplification of any weak signals received through the Antenna.

The X-STM32MP-GNSS1 interfaces with the microprocessor mother board via 40 pin GPIO connector pins using I2C, UART, GPIO connections for Teseo-LIV3FL, iNEMO inertial module, sensors, Keys & LEDs. This board is compatible with both STM32MP157F-DK2 and Raspberry Pi's GPIO connector layout.

Figure 3. System block diagram

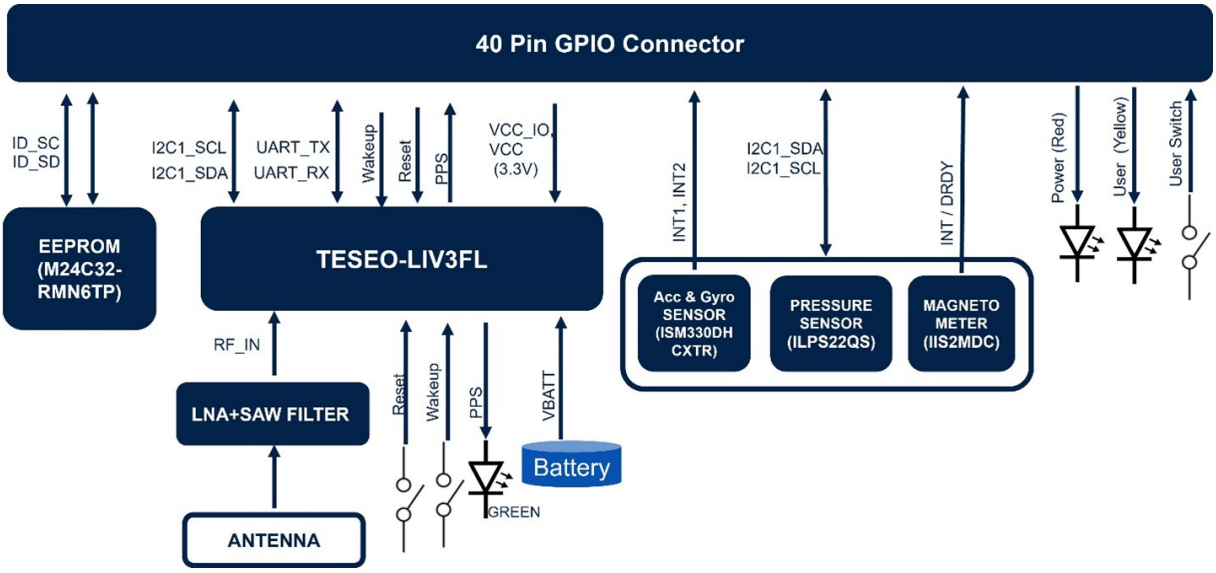

1.1 System requirements

To use the X-STM32MP-GNSS1, you need:

- An X-STM32MP-GNSS1 expansion board
- An STM32MP157F-DK2 discovery kit
- A laptop/desktop (with Windows 10 or above)
- A USB Type-A to micro-B USB cable (for connection as a virtual serial device, if required)
- A USB PD compliant 5 V 3 A power supply with a USB Type-C® to Type-C® cable.

1.2 Board setup

To set up the board, follow the steps below:

Step 1. Check the position of the jumper on the J1 connector. This jumper enables the write operation for the EEPROM, if required.

Step 2. Connect the provided antenna to X-STM32MP-GNSS1 board on SMA Connector CN3.

Step 3. Connect the X-STM32MP-GNSS1 to the STM32MP157F-DK2 at the top, as shown below. Ensure that pin 1 of the X-STM32MP-GNSS1 board matches with pin 1 of the STM32MP157F-DK2 board. Pin 1 can be identified as a rectangular footprint pad on both boards.

Note: Boards can damage if not connected properly.

Figure 4. X-STM32MP-GNSS1 connected to STM32MP157F-DK2

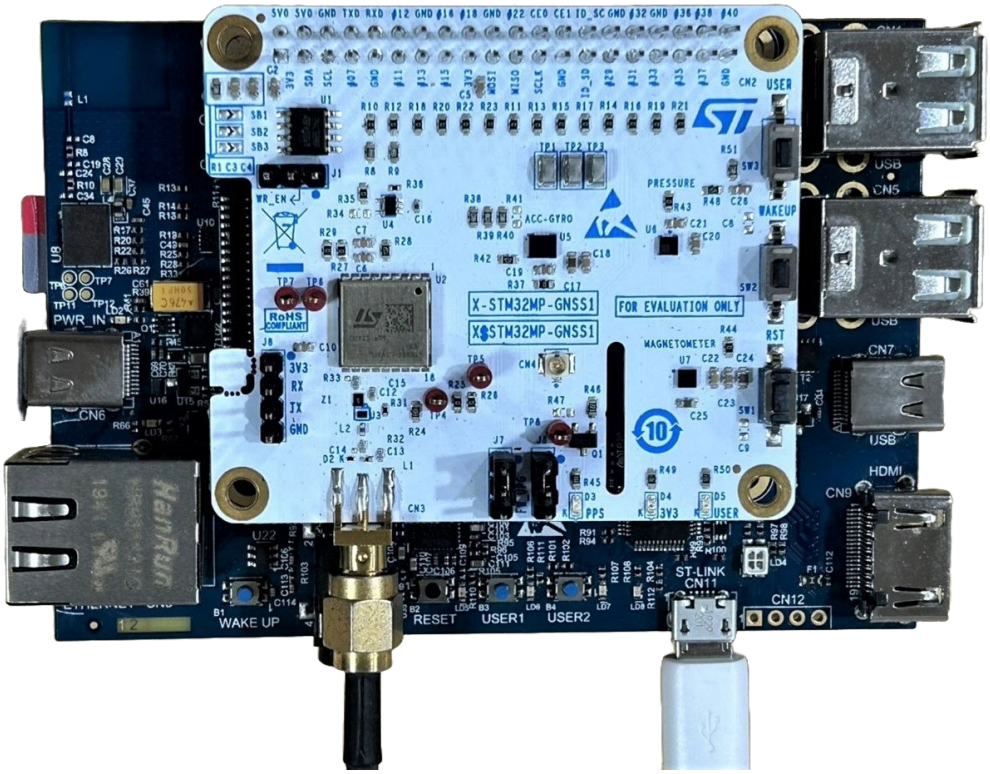

Step 4. Power the STM32MP157F-DK2 using the USB Type-C® cable.

Step 5. Program the supported firmware in the microSD™ card of the STM32MP157F-DK2 board. The X-STM32MP-GNSS1 board is ready for use.

2 Component description

The board comprises the following key devices:

2.1 EEPROM Section

M24C32 is a 32-Kbit I2C-compatible EEPROM (electrically erasable programmable memory) organized as 4 K × 8 bits.

Table 1. M24C32-R package details

Features	Description
Order code	M24C32-RMN6TP
Package	SO8
Operating voltage	1.8 V to 5.5 V

Onboard jumper J1 can be used to enable or disable the write operation on the EEPROM to prevent unauthorized write operations. This jumper setting details are shown in Table 2.

Table 2. EEPROM jumper details

Jumper	EEPROM
1-2	WRITE_ENABLE
2-3 (default)	WRITE_DISABLE

Figure 5. EEPROM Circuit

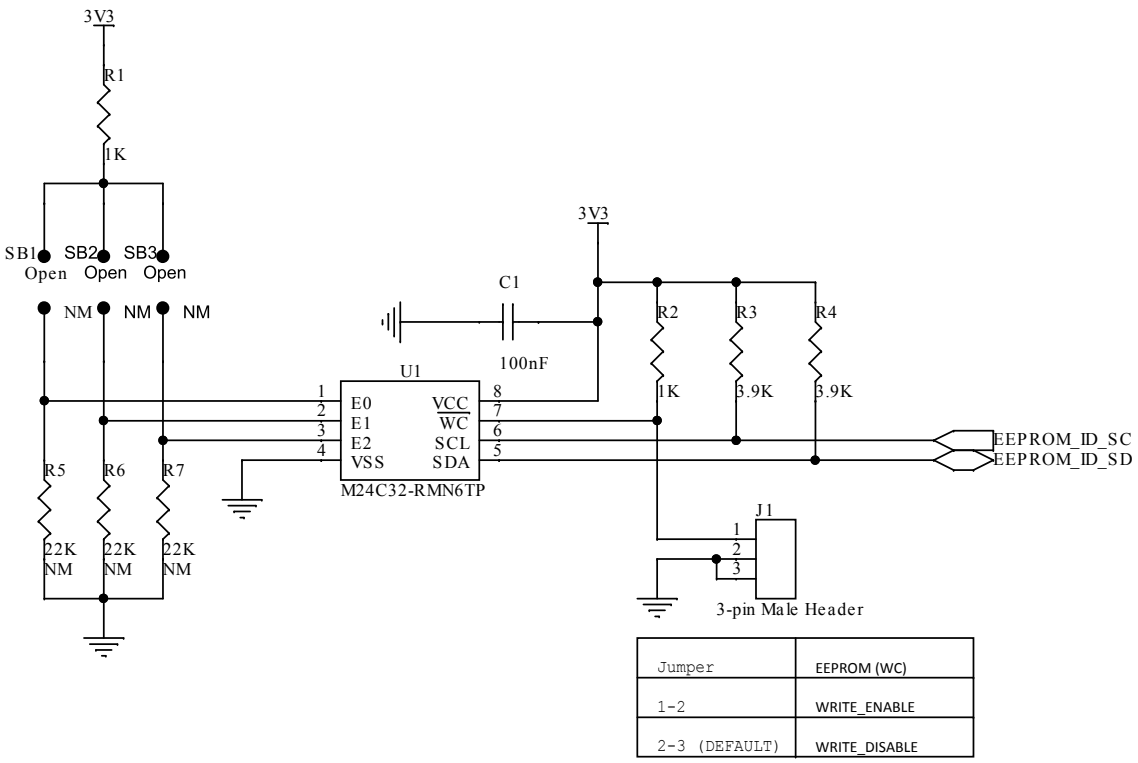

2.2 Teseo-LIV3FL module section

The Teseo-LIV3FL module is based on the TESEO III single-die standalone positioning receiver IC, which is a low-power tiny GNSS receiver. Within its 9.7 x 10.1 mm tiny size, the Teseo-LIV3FL offers superior accuracy as it has integrated temperature, compensated crystal oscillator (TCXO), and a reduced time to first fix (TTFF) due to its dedicated real-time clock (RTC) oscillator.

Table 3. Teseo-LIV3FL details

Features	Description
Order code	Teseo-LIV3FL
Package	LCC-18
Operating Voltage	1.75 to 4.2 V

Figure 6. TESEO-LIV3FL Circuit

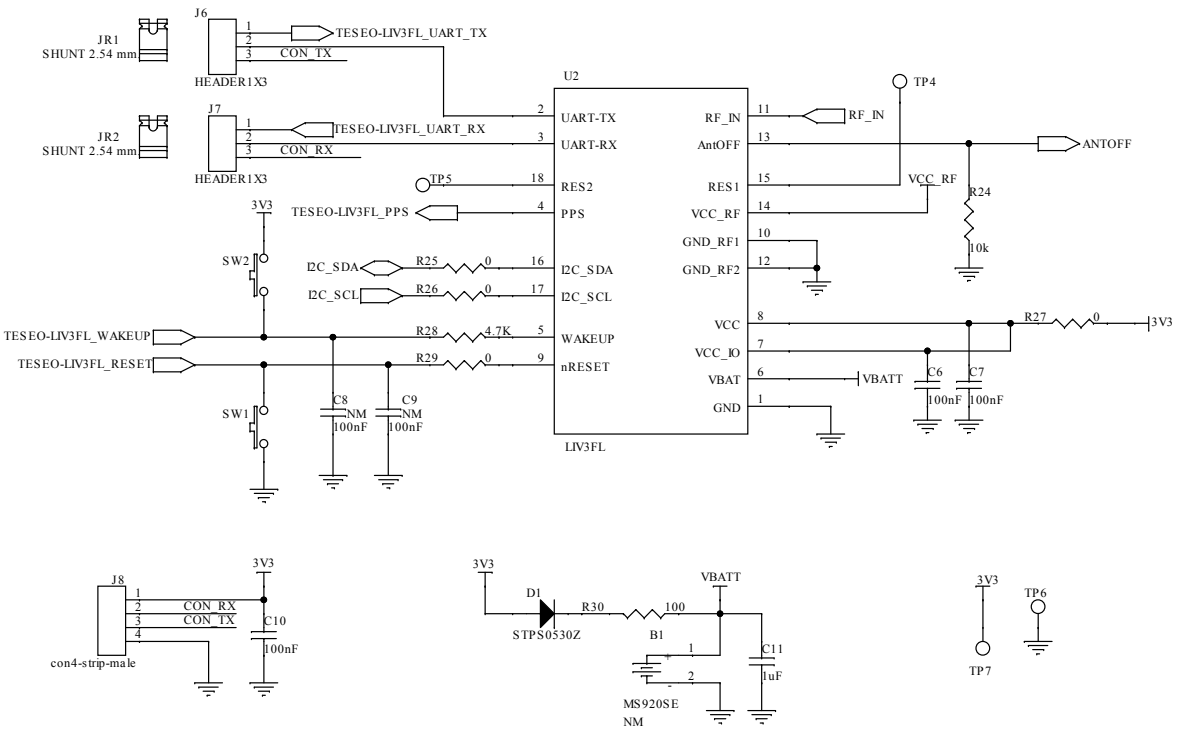

2.3 LNA (low noise amplifier)

An external low noise amplifier (LNA) is also present to amplify the weak signals received. The low noise amplifier (BGA824N6) ranges from 1550 MHz to 1615 MHz. It provides a 17.0 dB gain and 0.55 dB noise figure at a current consumption of 3.8 mA.

Table 4. LNA (BGA824N6) details

Features	Description
Order Code	BGA824N6
Operating Frequency	1550 to 1615 MHz
Gain	17.0 dB
Current Consumption	3.8 mA
Noise Figure	0.55 dB

2.4 SAW Filter - B39162B4327P810

The SAW Filter (B39162B4327P810) has very low insertion attenuation and High out-of-band selectivity which makes it a perfect component to go with LNA. It has a Low amplitude ripple with a Filter impedance of 50 Ω.

Figure 7. SAW filter circuit

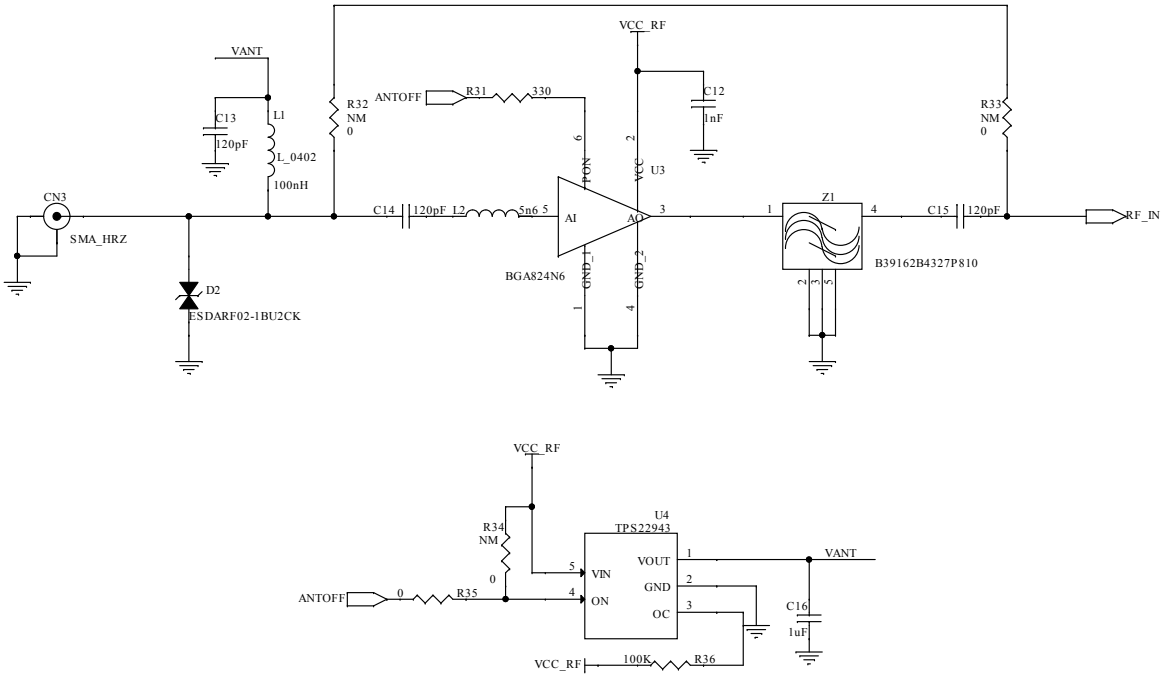

2.5 Accelerometer and gyroscope: ISM330DHCX

The ISM330DHCX is a system-in-package featuring a high-performance 3-axis digital accelerometer and 3-axis digital gyroscope tailored for Industry 4.0 applications. In the ISM330DHCX the sensing elements of the accelerometer and of the gyroscope are implemented on the same silicon die, thus guaranteeing superior stability and robustness.

The ISM330DHCX has a full-scale acceleration range of ±2/±4/±8/±16 g and a wide angular rate range of ±125/±250/±500/±1000/±2000/±4000 dps that enable its usage in a broad range of applications.

All the design aspects and the calibration of the ISM330DHCX have been optimized to reach superior accuracy, stability, extremely low noise, and full data synchronization.

An unmatched set of embedded features (machine learning core, programmable FSM, FIFO, sensor hub, event decoding and interrupts) are enablers for implementing smart and complex sensor nodes which deliver high performance at very low power.

The ISM330DHCX is available in a 14-lead plastic land grid array (LGA) package.

Table 5. ISM330DHCXTR details

Features	Description
Order code	ISM330DHCX, ISM330DHCXTR
Package	LGA-14L
Operating Voltage	1.71 V to 3.6 V

Figure 8. ISM330DHCXTR circuit

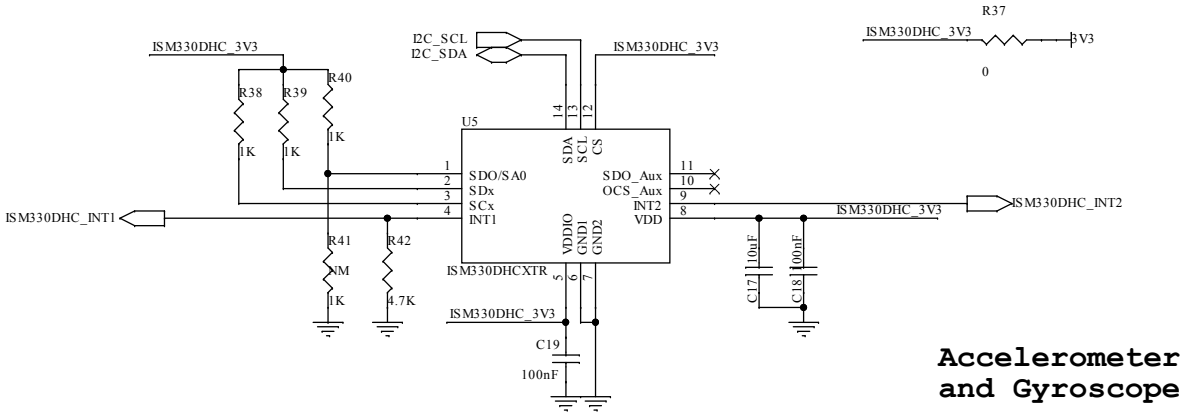

2.6 Pressure Sensor ILPS22QS

The ILPS22QS is an ultra-compact piezoresistive absolute pressure sensor which functions as a digital output barometer, supporting dual full-scale up to user-selectable 4060 hPa. An embedded QVAR (electric charge variation detection) channel can be enabled for sensing in applications such as tap, double tap, long press, and L/R - R/L swipe.

The ILPS22QS comprises a sensing element and an IC interface which communicates over I²C, MIPI I3CSM or SPI interfaces from the sensing element to the application and supports 1.2 V digital interface as well.

The ILPS22QS is available in a full-mold, holed LGA package (HLGA). The package is holed to allow external pressure to reach the sensing element.

Table 6. ILPS22QSTR details

Features	Description
Order code	ILPS22QSTR
Package	HLGA-10L
Operating Voltage	1.71 V to 3.6 V

Figure 9. **ILPS22QSTR Circuit**

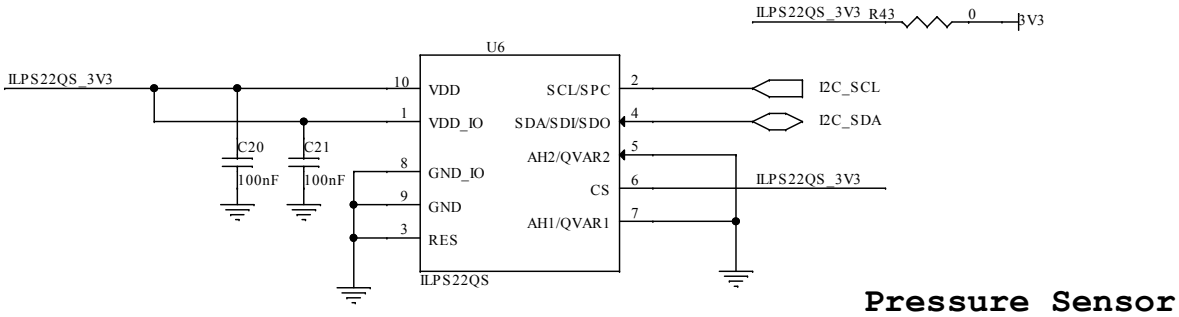

2.7 Magnetometer sensor IIS2MDC

The IIS2MDC is a high-accuracy, ultra-low-power 3-axis digital magnetic sensor. The IIS2MDC has a magnetic field dynamic range up to ±50 gauss.

The IIS2MDC includes an I2C serial bus interface that supports standard, fast mode, fast mode plus, and high-speed (100 kHz, 400 kHz, 1 MHz, and 3.4 MHz) and an SPI serial standard interface.

The device can be configured to generate an interrupt signal for magnetic field detection.

The IIS2MDC is available in a plastic land grid array package (LGA) and is guaranteed to operate over an extended temperature range from -40 °C to +85 °C.

Table 7. **IIS2MDCTR details**

Features	Description
Order code	IIS2MDCTR
Package	12-WFLGA
Operating Voltage	1.71 V to 3.6 V

Figure 10. **IIS2MDC Circuit**

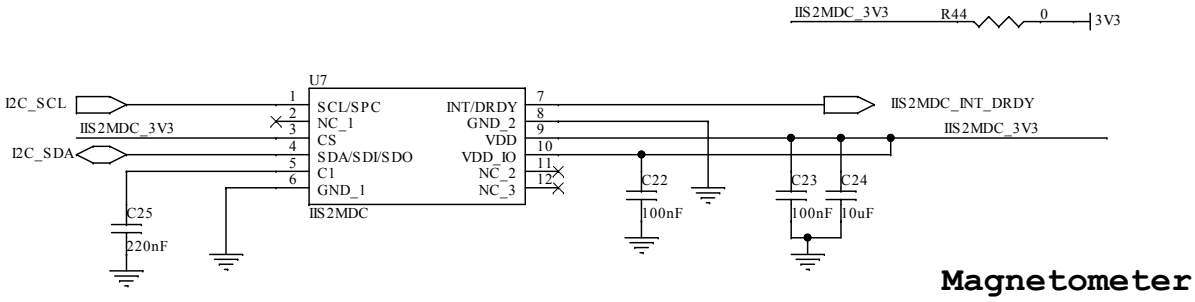

2.8 LEDs and Switches

3 LEDs are used as an output to indicate to the user of the functioning of the module. Red LED glows constantly indicating adequate power supply is available to the board. Green LED blinks continuously to indicate the functioning of PPS (pulse per second). All user indicated functions are denoted by the Yellow LED when the USER Switch (SW3) is pressed. The other 2 push button switches (SW1, SW2) are used to take input such as RESET or WAKEUP from the user.

Figure 11. LED'S and Switches Circuit

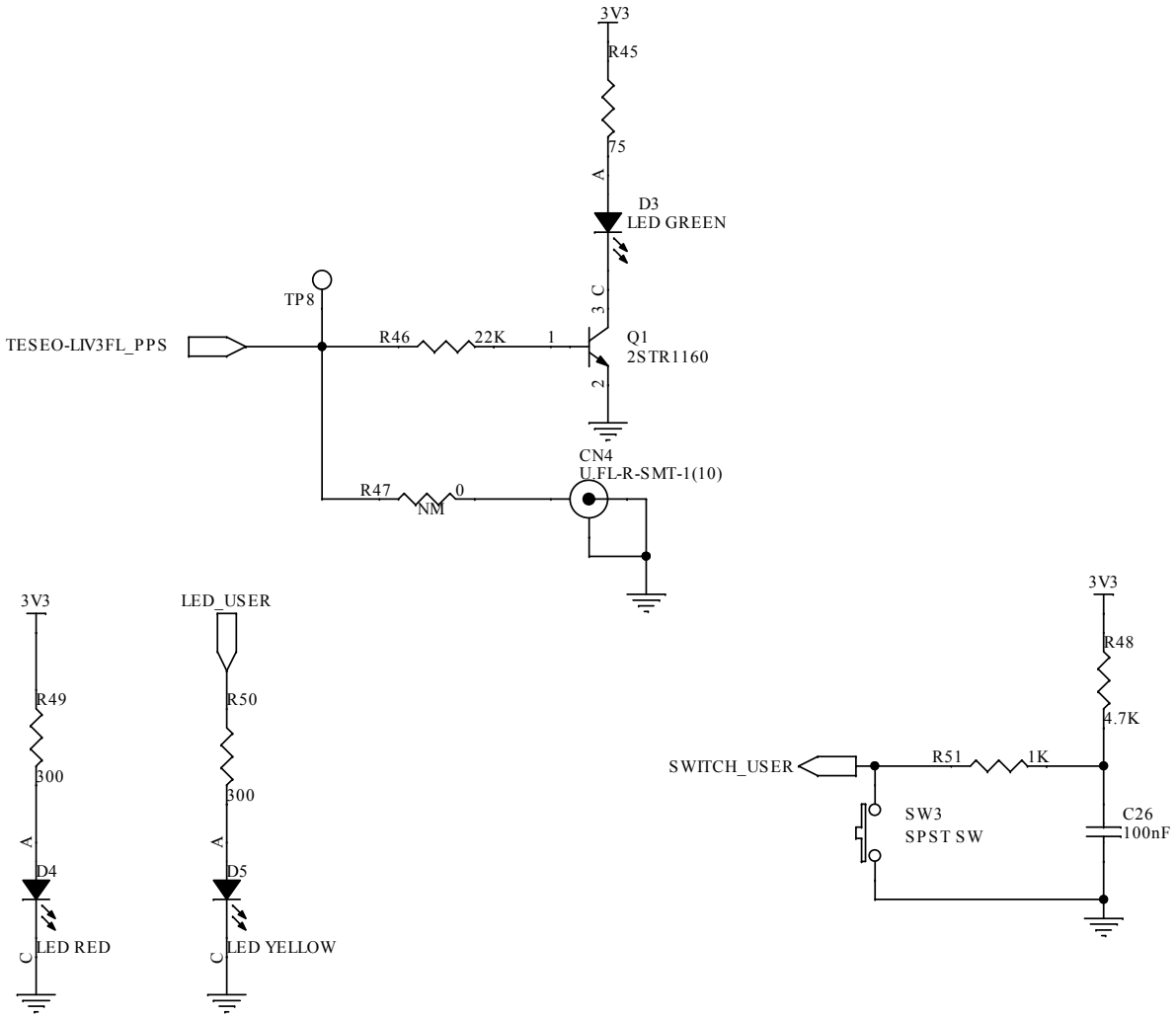

2.9 40 PIN GPIO connector

The on-board devices will be controlled through the main board using various peripheral pins available on the GPIO connector. The series resistors are used to isolate the pins of GPIO connector.

Figure 12. GPIO Connector

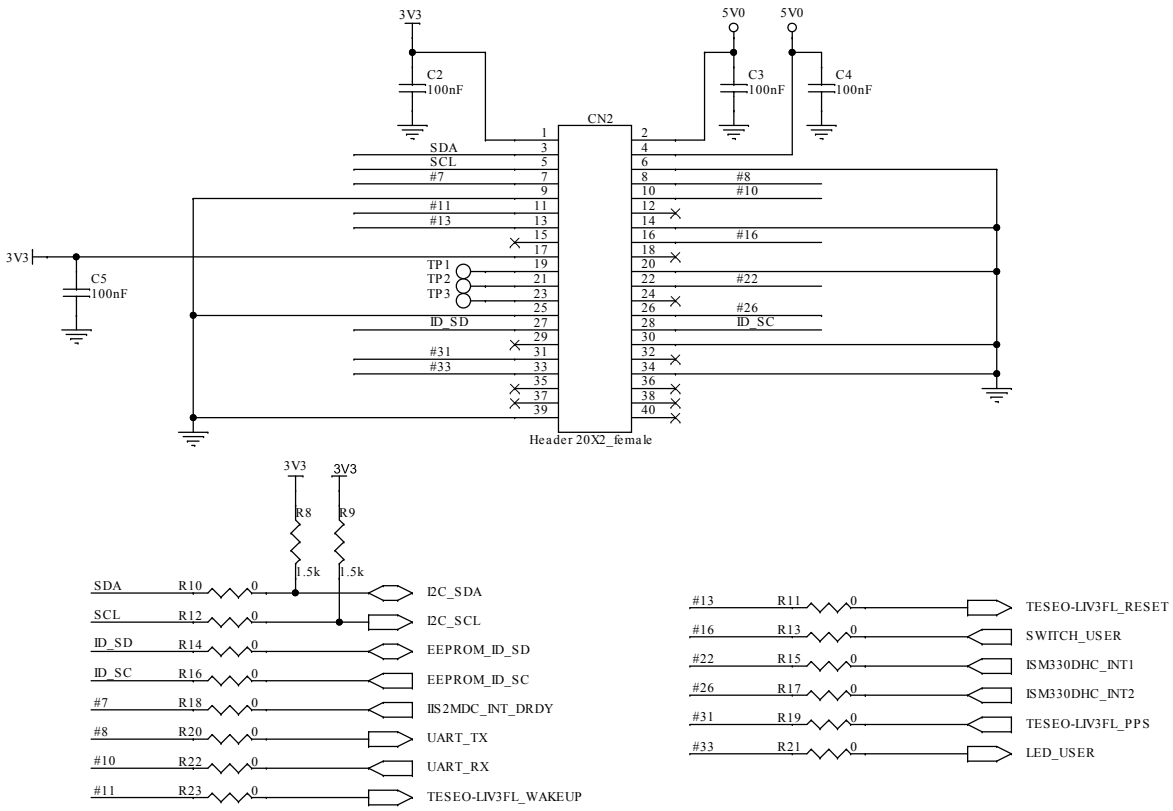

Table 8. GPIO connector pin configuration

Pin No	Name	STM32MP157F-DK2	Pin No	Name	STM32MP157F-DK2
1	3V3		2	5V0	
3	I2C_SDA	PA12 / I2C5_SDA	4	5V0	
5	I2C_SCL	PA11 / I2C5_SCL	6	GND	
7	#7	PA8/ MCO1	8	TESEO-LIV3FL_UART_RX	PB10 / USART3_TX
9	GND	GND	10	TESEO-LIV3FL_UART_TX	PB12 / USART3_RX
11	TESEO-LIV3FL_WAKEUP	PG8 / USART3_RTS	12	#12	PI5 / SAI2_SCKA
13	TESEO-LIV3FL_RESET	PD7 / SDMMC3_D3	14	GND	
15	#15	PG15 / SDMMC3_CK	16	SWITCH_USER	PF1 / SDMMC3_CMD
17	3V3		18	#18	PF0 / SDMMC3_D0
19	#19	PF9/ SPI5_MOSI	20	GND	
21	#21	PF8 / SPI5_MISO	22	ISM330DHC_INT1	PF4 / SDMMC3_D1
23	#23	PF7 / SPI5_SCK	24	#24	PF6 / SPI5_NSS
25	GND		26	ISM330DHC_INT2	PF3 / GPIO7
27	EEPROM_ID_SD	PF15/I2C1_SDA	28	EEPROM_ID_SC	PD12 / I2C1_SCL
29	#29	PG2/ MCO2	30	GND	
31	TESEO-LIV3FL_PPS	PH11 / TIM5_CH2	32	IIS2MDC_INT_DRDY	PD13 / TIM4_CH2
33	LED_USER (YELLOW)	PC7/TIM3_CH2	34	GND	
35	#35	PI7 / SAI2_FSA	36	#36	PB13 / USART3_CTS
37	#37	PF5/ SDMMC3_D2	38	#38	PI6 / SAI2_SDA
39	GND		40	#40	PF11 / SAI2_SDB

3 Schematic diagrams

Figure 13. X-STM32MP-GNSS1 schematic diagram (1 of 9)

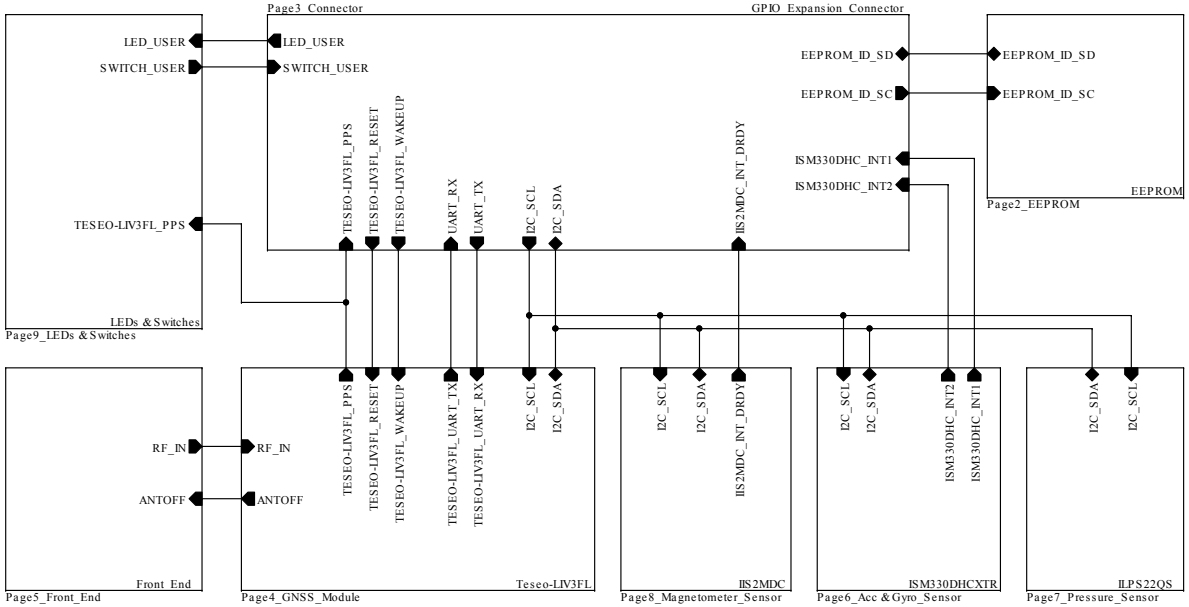

Figure 14. X-STM32MP-GNSS1 schematic diagram (2 of 9)

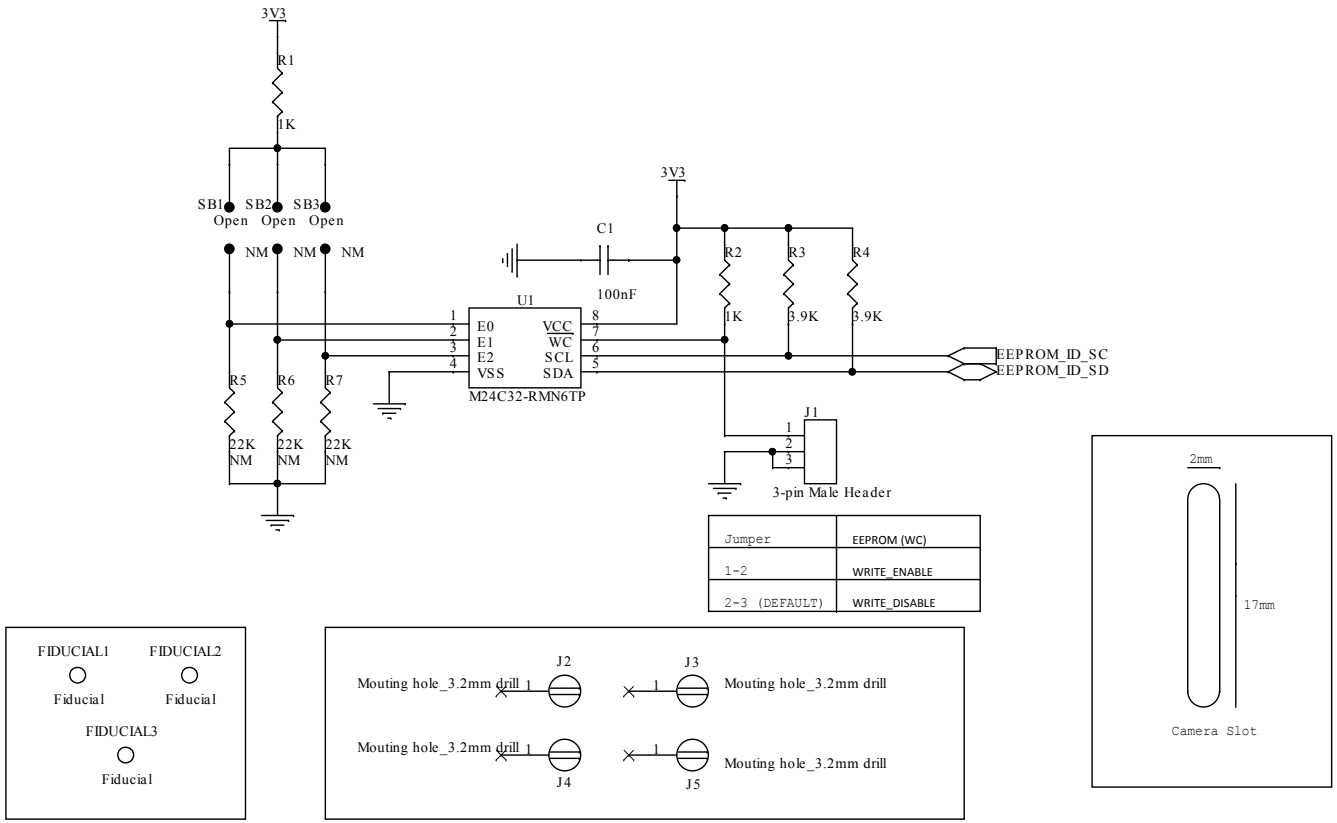

Figure 15. X-STM32MP-GNSS1 schematic diagram (3 of 9)

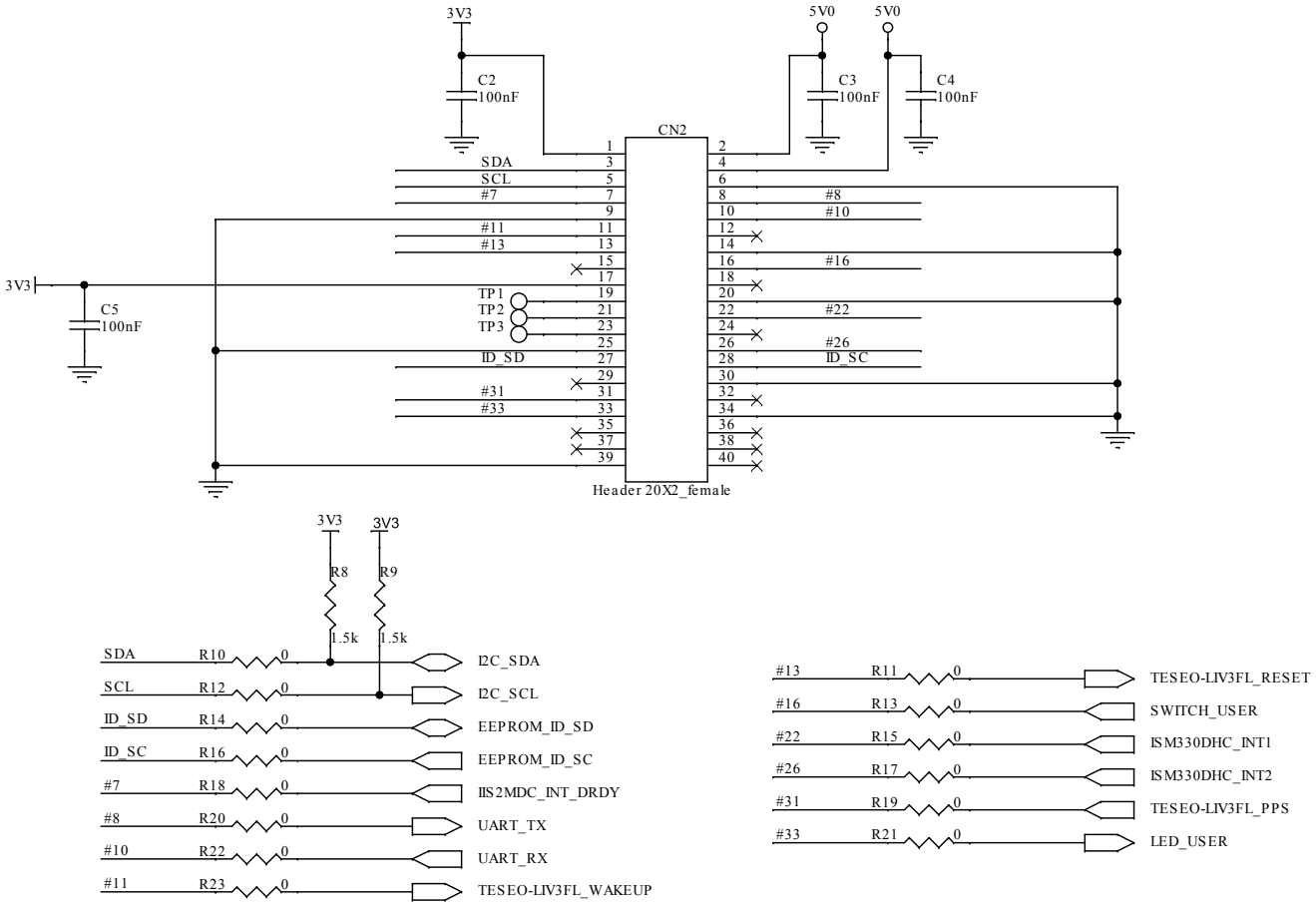

Figure 16. X-STM32MP-GNSS1 schematic diagram (4 of 9)

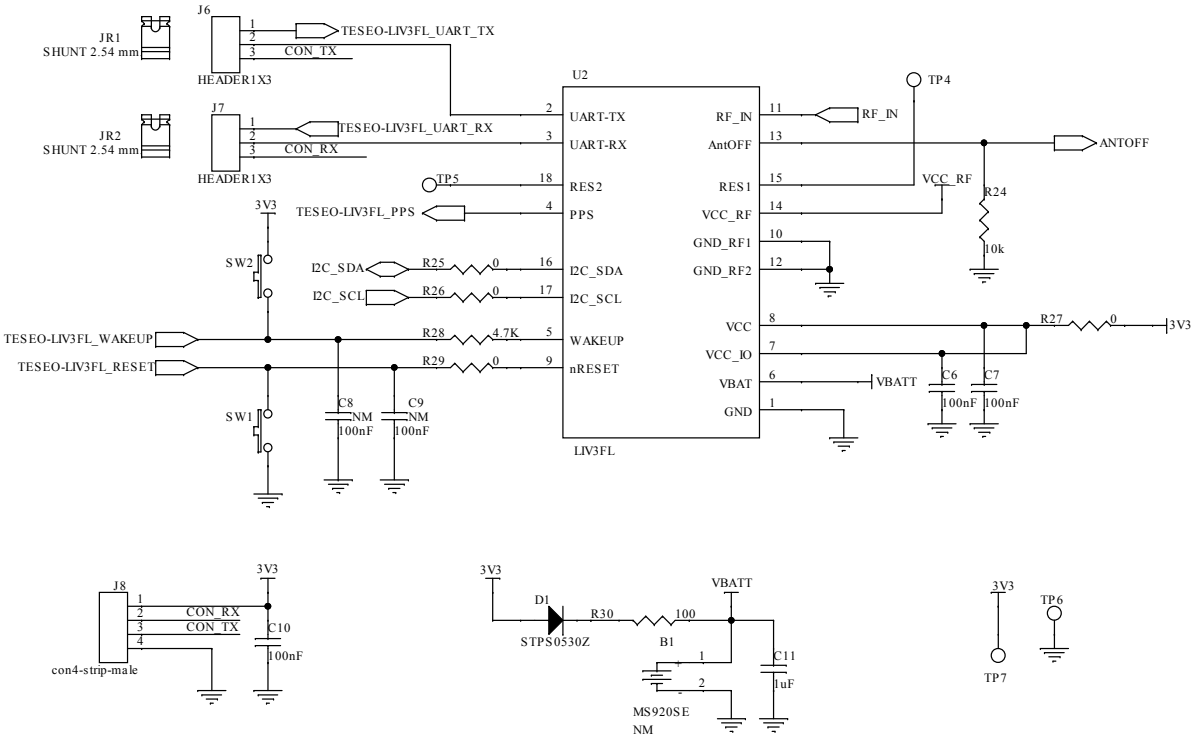

Figure 17. X-STM32MP-GNSS1 schematic diagram (5 of 9)

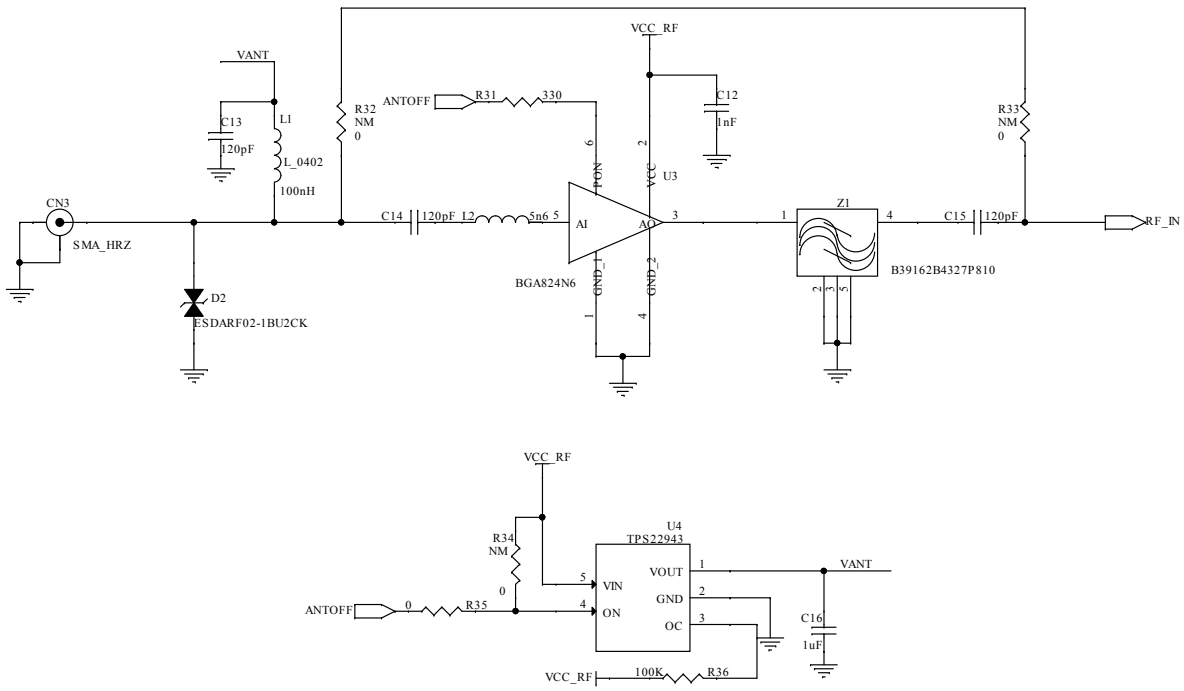

Figure 18. X-STM32MP-GNSS1 schematic diagram (6 of 9)

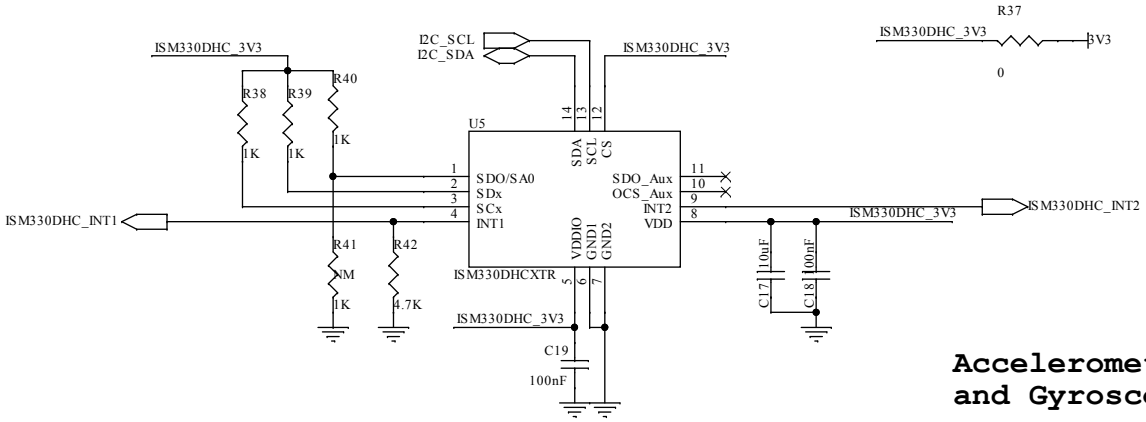

Accelerometer and Gyroscope

Figure 19. X-STM32MP-GNSS1 schematic diagram (7 of 9)

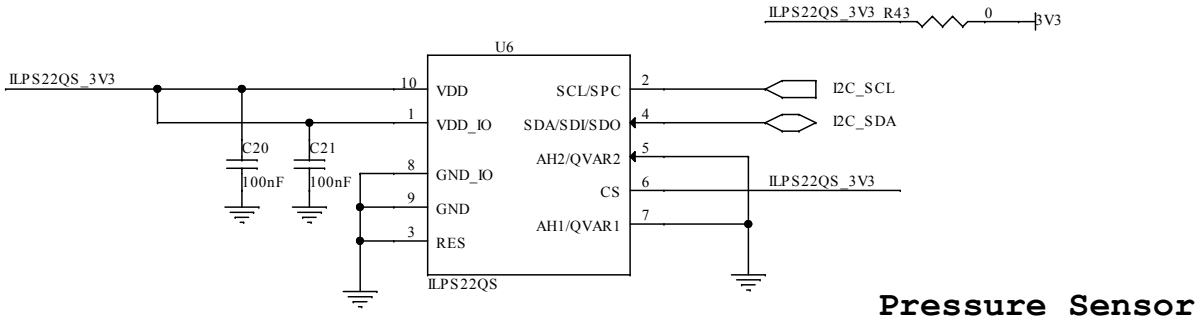

Figure 20. X-STM32MP-GNSS1 schematic diagram (8 of 9)

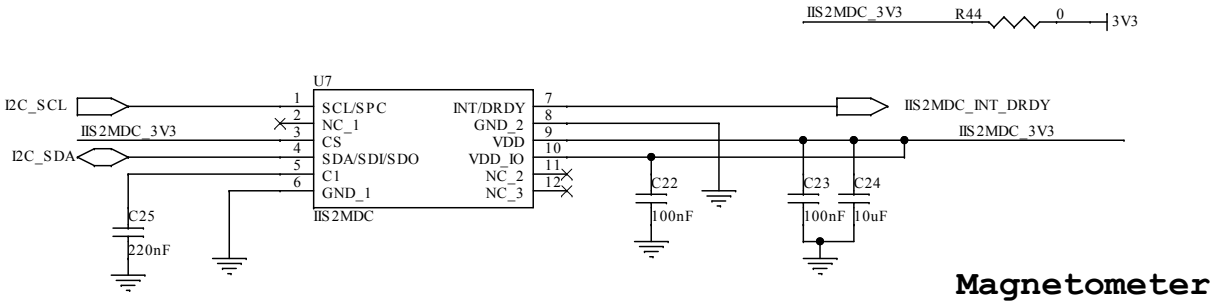

Figure 21. X-STM32MP-GNSS1 schematic diagram (9 of 9)

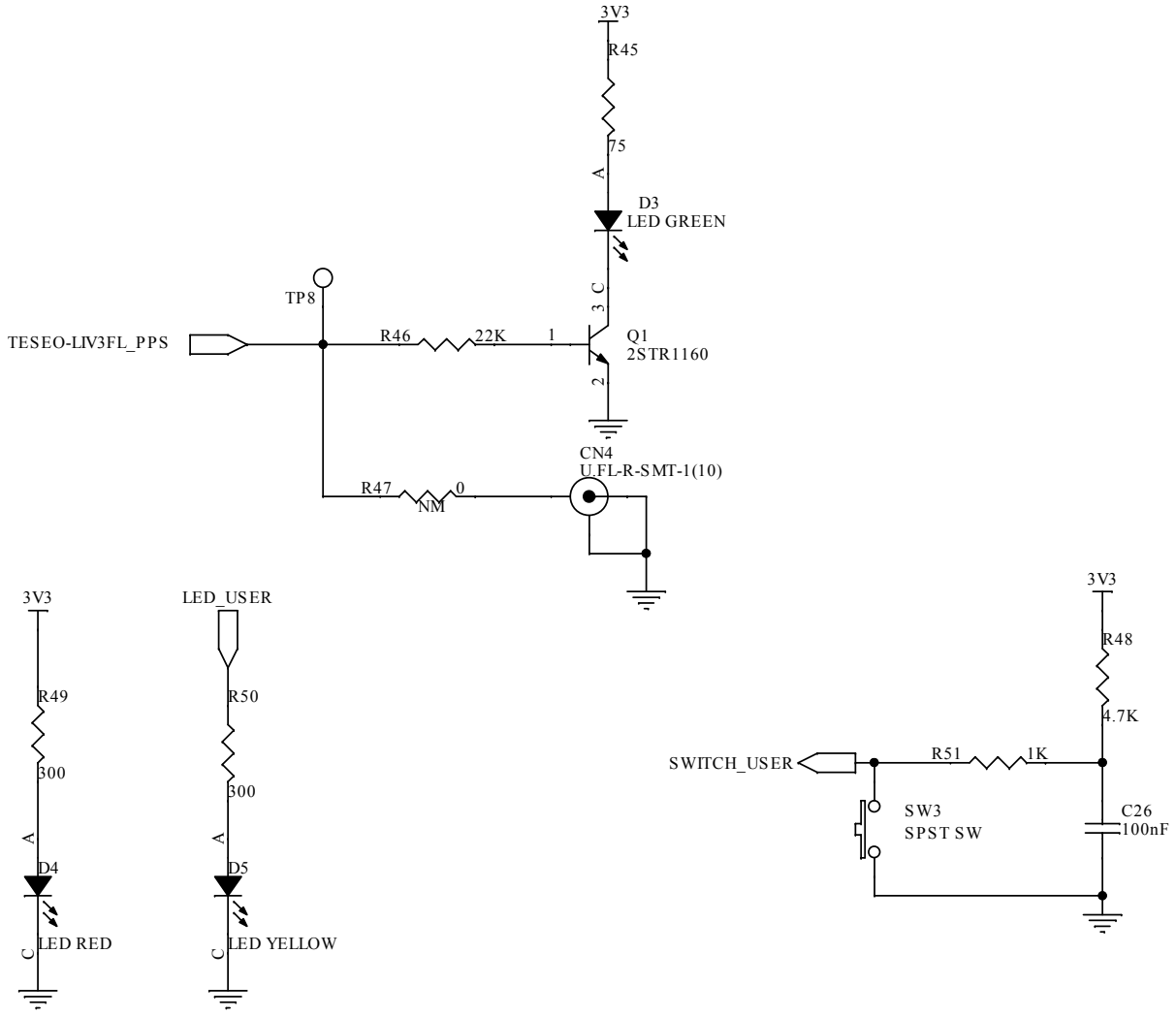

4 Bill of materials

Table 9. **X-STM32MP-GNSS1 bill of materials**

Item	Q.ty	Ref.	Part/value	Description	Manufacturer	Order code
1	1	B1	S8421-45R	Battery Holder (Open) Coin, 20.0mm 1 Cell SMD (SMT) Tab	Harwin Inc.	S8421-45R
2	15	C1 C2 C3 C4 C5 C6 C7 C10 C18 C19 C20 C21 C22 C23 C26	100nF	CAP CER 0.1UF 16V X7R 0603	KEMET	C0603C104K4RACTU
3	2	C8 C9	100nF	CAP CER 0.1UF 16V X7R 0603	KEMET	C0603C104K4RACTU
4	2	C11 C16	1uF	CAPACITOR CERAMIC SMD 0402	Murata Electronics	GRM155R61C105KA12D
5	1	C12	1nF	Automotive Grade Surface mount 0402 capacitor ceramic 1nF, 10% 50V X7R	Murata	GCM155R71H102KA37
6	3	C13 C14 C15	120pF	Automotive Grade Surface mount 0402 capacitor ceramic 120pF, 5% 50V C0G	Murata	GCM1555C1H121JA16
7	2	C17 C24	10uF	CAP CER 10UF 16V X5R 0603	Murata Electronics	ZRB18AR61C106ME01L
8	1	C25	220nF	CAP CER 0.22UF 16V X7R 0603	Walsin Technology Corporation	0603B224K160CT
9	1	CN2	Header 20X2_female	Double Row_Vertical_.100"_Extended Tail Connector	Samtec	SSQ-120-03-T-D
10	1	CN3	SMA_HRZ	50 Ohm SMA Jack, Edge Mount	Samtec	SMA-J-P-H-ST-EM1
11	1	CN4	U.FL-R-SMT-1(10)	CONN U.FL RCPT STR 50 OHM SMD	Hirose Electric Co Ltd	U.FL-R-SMT-1(10)
12	1	D1	STPS0530Z, SOD-123	Surface mount SCHOTTKY RECTIFIERS	STMicroelectronics	STPS0530Z
13	1	D2	ESDARF02-1BU2CK, ST0201	TVS DIODE 3.6VWM 12VC 0201	STMicroelectronics	ESDARF02-1BU2CK
14	1	D3	LED GREEN	LED GREEN CLEAR 0603 SMD	Würth Elektronik	150060GS75000
15	1	D4	LED RED	LED RED CLEAR 0603 SMD	Würth Elektronik	150060RS75000
16	1	D5	LED YELLOW	LED YELLOW CLEAR 0603 SMD	Würth Elektronik	150060YS75000
17	1	J1	3-pin Male Header	CONN HEADER .100 STR 3POS	Samtec Inc.	TSW-103-07-F-S

Item	Q.ty	Ref.	Part/value	Description	Manufacturer	Order code
18	2	J6 J7	HEADER1X3	CONN HEADER .100 STR 3POS	Samtec Inc.	TSW-103-07-F-S
19	1	J8	con4-strip-male	CONN HEADER .100 STR 4POS	Samtec Inc.	TSW-104-07-F-S
20	2	JR1 JR2	SHUNT 2.54 mm.	Shunt Samtec 2pins pitch 2.54mm - Black coloured	TE Connectivity /AMP	1-382811-6
21	1	L1	100nH	100nH - Surface mount inductor - +/-5% - 0402	Murata	LQG15HNR10J02
22	1	L2	5n6	Surface mount wire wound inductor.	Coilcraft	0402CS-5N6XJLU
23	1	Q1	2STR1160, SOT-23	TRANS NPN 60V 1A SOT-23	STMicroelectronics	2STR1160
24	6	R1 R2 R38 R39 R40 R51	1K	RES SMD 1K OHM 1% 1/10W 0603	Vishay Dale	CRCW06031K00FKEA
25	2	R3 R4	3.9K	RES SMD 3.9K OHM 1% 1/10W 0603	Yageo	RT0603FRE073K9L
26	3	R5 R6 R7	22K	RES SMD 22K OHM 5% 1/10W 0603	Vishay Dale	CRCW060322K0JNEA
27	2	R8 R9	1.5k	RES SMD 1.5K OHM 1% 1/10W 0603	Yageo	RC0603FR-071K5P
28	22	R10 R11 R12 R13 R14 R15 R16 R17 R18 R19 R20 R21 R22 R23 R25 R26 R27 R29 R35 R37 R43 R44	0	RES SMD 0 OHM JUMPER 1/10W 0603	TE Connectivity Passive Product	CRG0603ZR
29	1	R24	10k	RES SMD 10K OHM 5% 1/10W 0603	Yageo	RC0603JR-0710KP
30	3	R28 R42 R48	4.7K	RES SMD 4.7K OHM 1% 1/10W 0603	Yageo	RC0603FR-074K7P
31	1	R30	100	CHIP RESISTOR SMD 1% 1/16W 0402	VISHAY	CRCW0402100RFKED
32	1	R31	330	RES SMD 330 OHM 1% 1/10W 0402	Panasonic Electronic Components	ERJ-2RKF3300X
33	2	R32 R33	0	RES SMD 0 OHM JUMPER 1/10W 0402	VISHAY	MCS04020Z0000ZE000
34	2	R34 R47	0	RES SMD 0 OHM JUMPER 1/10W 0603	TE Connectivity Passive Product	CRG0603ZR
35	1	R36	100K	RES SMD 100K OHM 5% 1/16W 0402	Yageo	AC0402JR-07100KL

Item	Q.ty	Ref.	Part/value	Description	Manufacturer	Order code
36	1	R41	1K	RES SMD 1K OHM 1% 1/10W 0603	Vishay Dale	CRCW06031K00FKEA
37	1	R45	75	RES 75 OHM 1% 1/10W 0603	Yageo	RC0603FR-0775RL
38	1	R46	22K	RES SMD 22K OHM 5% 1/10W 0603	Vishay Dale	CRCW060322K0JNEA
39	2	R49 R50	300	RES 300 OHM 1% 1/10W 0603	Stackpole Electronics Inc.	RMCF0603FT300R
40	3	SB1 SB2 SB3	Open	RES 0 OHM JUMPER 1/10W 0603	Rohm Semiconductor	SFR03EZPJ000
41	1	SW1	Tact SW	Tactile Switches SW TACT SPST 0.05A 12VDC	Apem	MJTP1106SATR
42	2	SW2 SW3	Tact SW	SWITCH TACTILE SPST-NO 0.05A 24V	TE Connectivity ALCOSWITCH Switches	1437566-3
43	3	TP1 TP2 TP3	TEST POINT	PC TEST POINT NATURAL	Harwin Inc.	S1751-46R
44	5	TP4 TP5 TP6 TP7 TP8	TEST POINT	PC TEST POINT NATURAL	Keystone Electronics	5000
45	1	U1	M24C32-RMN6TP, SO8	32 Kbit serial I2C bus EEPROM	STMicroelectronics	M24C32-RMN6TP
46	1	U2	TESEO-LIV3FL, RF MODULE	Tiny GNSS low power module	STMicroelectronics	Teseo-LIV3FL
47	1	U3	BGA824N6	Low Noise Amplifier for GPS, GLONASS, Galileo and Compass	infineon	BGA824N6
48	1	U4	TPS22943	Low-input voltage current-limited load switches. Active Hight.	Texas Instruments	TPS22943DCKR
49	1	U5	ISM330DHCXTR, VFLGA2.5X3X.86 14L P.5 L.475X.25	INEMO INERTIAL MODULE: 3D digital accelerometer and 3D digital gyroscope	STMicroelectronics	ISM330DHCXTR
50	1	U6	ILPS22QS, HLGA 2X2X.8 10L EXP. SILIC .91SQ	CONSUMER MEMS	STMicroelectronics	ILPS22QS
51	1	U7	IIS2MDCTR, LGA2X2X0.7 12 LEADS	High accuracy, ultra-low-power ,3-axis digital output magnetometer	STMicroelectronics	IIS2MDCTR
52	1	Z1	B39162B4327P810	FILTER SAW 5SMD	Qualcomm (RF360 - A Qualcomm & TDK Joint Venture)	B39162B4327P810

Table 10. Misc

Item	Q.ty	Ref.	Part/value	Description	Manufacturer	Order code
1	4	Nut		M3x0.5 Hex Nut 0.217" (5.50mm) Nylon	Würth Elektronik	709940300
2	4	Spacer		Hex Standoff Threaded M3x0.5 Nylon 0.472" (12.00mm) Natural	Essentra	36M30MF012
3	1	Antenna		Antenna 27dB Gain 1615MHz	INPAQ	B3G02G-S3-XX-A

5 X-STM32MP-GNSS1 versions

Table 11. X-STM32MP-GNSS1 versions

PCB version	Schematic diagrams	Bill of materials
X$STM32MP-GNSS1A[1]	X$STM32MP-GNSS1A schematic diagrams	X$STM32MP-GNSS1A bill of materials

1. *This code identifies the X-STM32MP-GNSS1 evaluation board first version. It is printed on the board PCB.*

6 Regulatory compliance information

Notice for US Federal Communication Commission (FCC)

This kit is designed to allow:

(1) Product developers to evaluate electronic components, circuitry, or software associated with the kit to determine

whether to incorporate such items in a finished product and

(2) Software developers to write software applications for use with the end product.

This kit is not a finished product and when assembled may not be resold or otherwise marketed unless all required FCC equipment authorizations are first obtained. Operation is subject to the condition that this product not cause harmful interference to licensed radio stations and that this product accept harmful interference. Unless the assembled kit is designed to operate under part 15, part 18 or part 95 of this chapter, the operator of the kit must operate under the authority of an FCC license holder or must secure an experimental authorization under part 5 of this chapter 3.1.2.

Notice for Innovation, Science and Economic Development Canada (ISED)

For evaluation purposes only. This kit generates, uses, and can radiate radio frequency energy and has not been tested for compliance with the limits of computing devices pursuant to Industry Canada (IC) rules.

À des fins d'évaluation uniquement. Ce kit génère, utilise et peut émettre de l'énergie radiofréquence et n'a pas été testé pour sa conformité aux limites des appareils informatiques conformément aux règles d'Industrie Canada (IC).

Notice for the European Union

The evaluation kit is in conformity with the essential requirements of the Directive 2014/53/EU (RED) and of the Directive 2015/863/EU (RoHS). Applied harmonized standards are listed in the EU Declaration of Conformity.

Notice for the United Kingdom

The evaluation kit is in compliance with the UK Radio Equipment Regulations 2017 (UK SI 2017 No. 1206 and amendments) and with the Restriction of the Use of Certain Hazardous Substances in Electrical and Electronic Equipment Regulations 2012 (UK SI 2012 No. 3032 and amendments). Applied standards are listed in the UK Declaration of Conformity.

Revision history

Table 12. **Document revision history**

Date	Revision	Changes
31-Oct-2023	1	Initial release.

Contents

1 Overview 2
1.1 System requirements 3
1.2 Board setup 4
2 Component description 5
2.1 EEPROM Section 5
2.2 Teseo-LIV3FL module section 6
2.3 LNA (low noise amplifier) 7
2.4 SAW Filter - B39162B4327P810 7
2.5 Accelerometer and gyroscope: ISM330DHCX 7
2.6 Pressure Sensor ILPS22QS 8
2.7 Magnetometer sensor IIS2MDC 9
2.8 LEDs and Switches 10
2.9 40 PIN GPIO connector 11
3 Schematic diagrams 13
4 Bill of materials 20
5 X-STM32MP-GNSS1 versions 24
6 Regulatory compliance information 25
Revision history 26
List of tables 28
List of figures 29

List of tables

Table 1. M24C32-R package details . . . 5
Table 2. EEPROM jumper details . . . 5
Table 3. Teseo-LIV3FL details . . . 6
Table 4. LNA (BGA824N6) details . . . 7
Table 5. ISM330DHCXTR details . . . 8
Table 6. ILPS22QSTR details . . . 8
Table 7. IIS2MDCTR details . . . 9
Table 8. GPIO connector pin configuration . . . 12
Table 9. X-STM32MP-GNSS1 bill of materials . . . 20
Table 10. Misc . . . 23
Table 11. X-STM32MP-GNSS1 versions . . . 24
Table 12. Document revision history . . . 26

List of figures

Figure 1. X-STM32MP-GNSS1 expansion board . . . 1
Figure 2. X-STM32MP-GNSS1 component placement details . . . 2
Figure 3. System block diagram . . . 3
Figure 4. X-STM32MP-GNSS1 connected to STM32MP157F-DK2 . . . 4
Figure 5. EEPROM Circuit . . . 5
Figure 6. TESEO-LIV3FL Circuit. . . . 6
Figure 7. SAW filter circuit . . . 7
Figure 8. ISM330DHCXTR circuit . . . 8
Figure 9. ILPS22QSTR Circuit . . . 9
Figure 10. IIS2MDC Circuit . . . 9
Figure 11. LED’S and Switches Circuit . . . 10
Figure 12. GPIO Connector . . . 11
Figure 13. X-STM32MP-GNSS1 schematic diagram (1 of 9) . . . 13
Figure 14. X-STM32MP-GNSS1 schematic diagram (2 of 9) . . . 14
Figure 15. X-STM32MP-GNSS1 schematic diagram (3 of 9) . . . 15
Figure 16. X-STM32MP-GNSS1 schematic diagram (4 of 9) . . . 16
Figure 17. X-STM32MP-GNSS1 schematic diagram (5 of 9) . . . 17
Figure 18. X-STM32MP-GNSS1 schematic diagram (6 of 9) . . . 17
Figure 19. X-STM32MP-GNSS1 schematic diagram (7 of 9) . . . 18
Figure 20. X-STM32MP-GNSS1 schematic diagram (8 of 9) . . . 18
Figure 21. X-STM32MP-GNSS1 schematic diagram (9 of 9) . . . 19

IMPORTANT NOTICE – READ CAREFULLY

STMicroelectronics NV and its subsidiaries (“ST”) reserve the right to make changes, corrections, enhancements, modifications, and improvements to ST products and/or to this document at any time without notice. Purchasers should obtain the latest relevant information on ST products before placing orders. ST products are sold pursuant to ST’s terms and conditions of sale in place at the time of order acknowledgment.

Purchasers are solely responsible for the choice, selection, and use of ST products and ST assumes no liability for application assistance or the design of purchasers’ products.

No license, express or implied, to any intellectual property right is granted by ST herein.

Resale of ST products with provisions different from the information set forth herein shall void any warranty granted by ST for such product.

ST and the ST logo are trademarks of ST. For additional information about ST trademarks, refer to www.st.com/trademarks. All other product or service names are the property of their respective owners.

Information in this document supersedes and replaces information previously supplied in any prior versions of this document.

© 2023 STMicroelectronics – All rights reserved