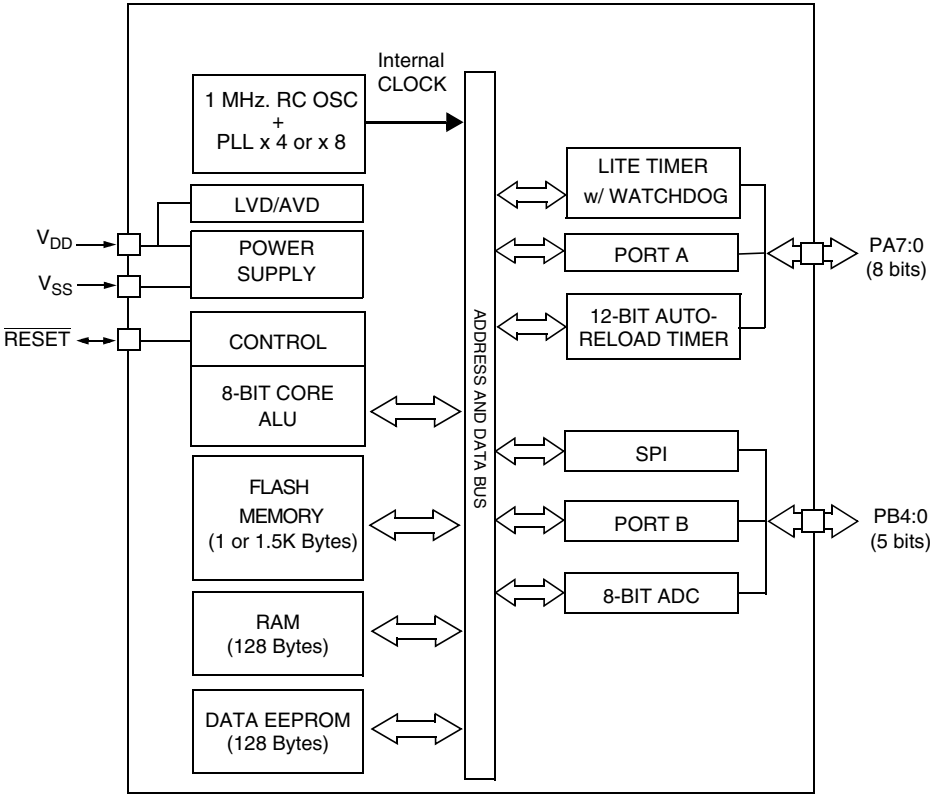
Internal
CLOCK
1 MHz. RC OSC
+
PLL x 4 or x 8
LVD/AVD
POWER
SUPPLY
CONTROL
8-BIT CORE
ALU
FLASH
MEMORY
(1 or 1.5K Bytes)
RAM
(128 Bytes)
DATA EEPROM
(128 Bytes)
ADDRESS AND DATA BUS
LITE TIMER
w/ WATCHDOG
PORT A
12-BIT AUTO-
RELOAD TIMER
SPI
PORT B
8-BIT ADC
PA7:0
(8 bits)
PB4:0
(5 bits)
VDD
VSS
RESET